Reobrix

NO.66049

Revenge Sailing ship

REVENGE
CLASS BATTLESHIP

B

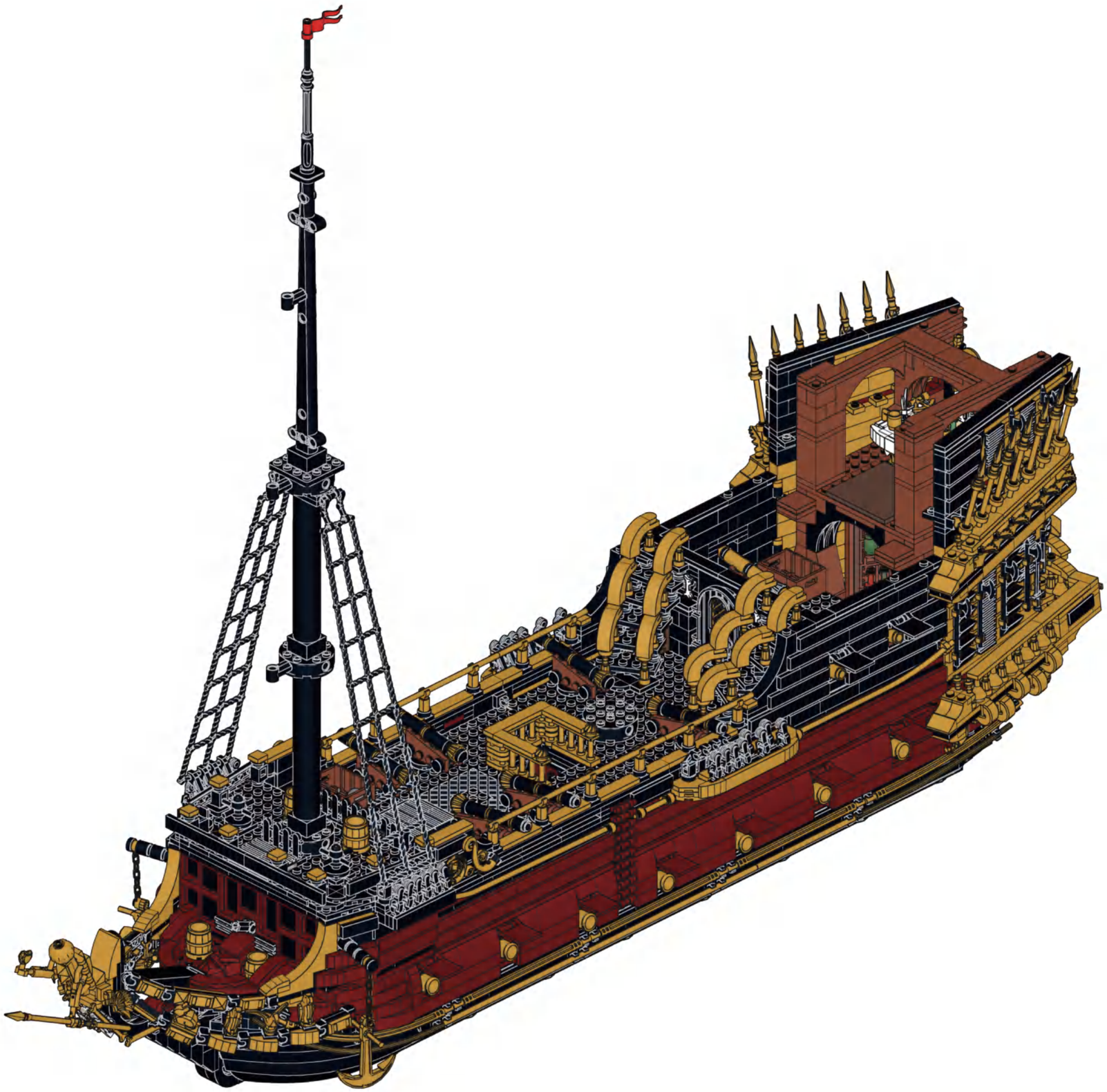
12
L

L1

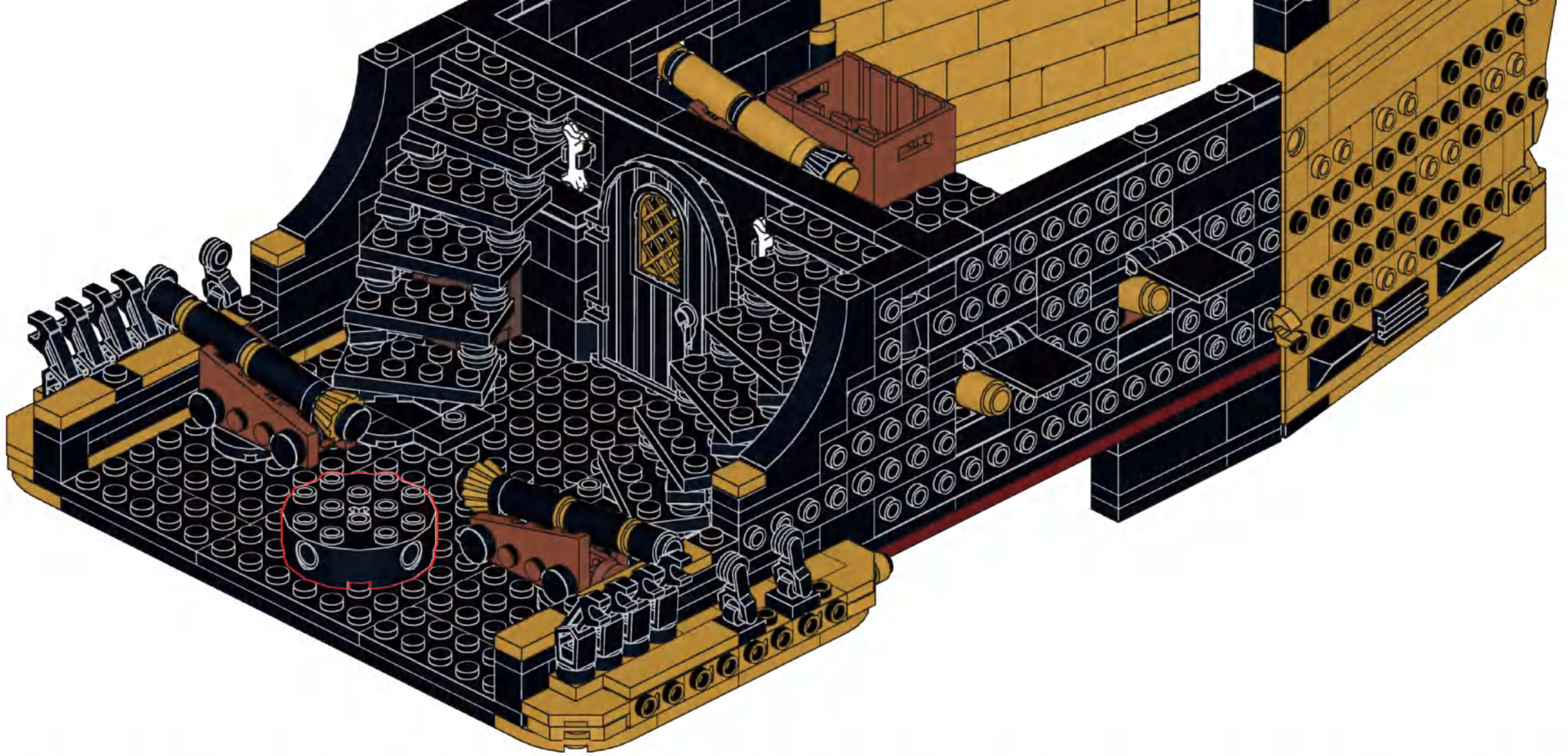

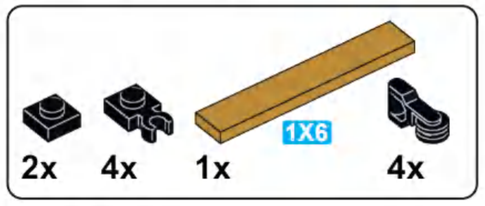

L2

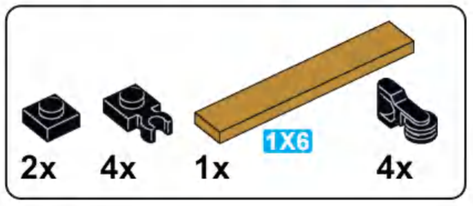

L3

1X6

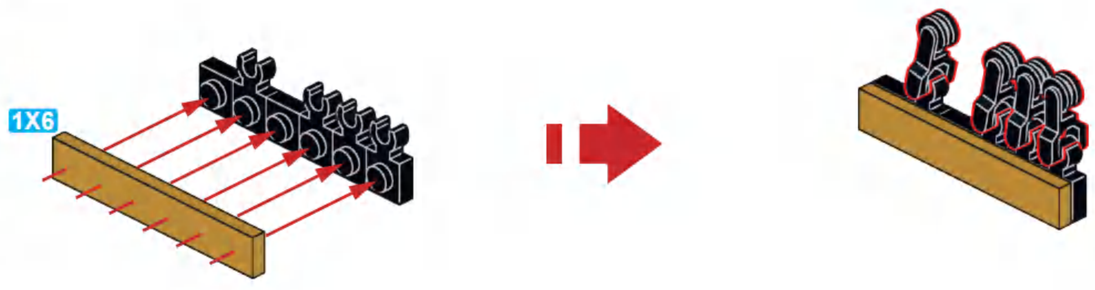

L4

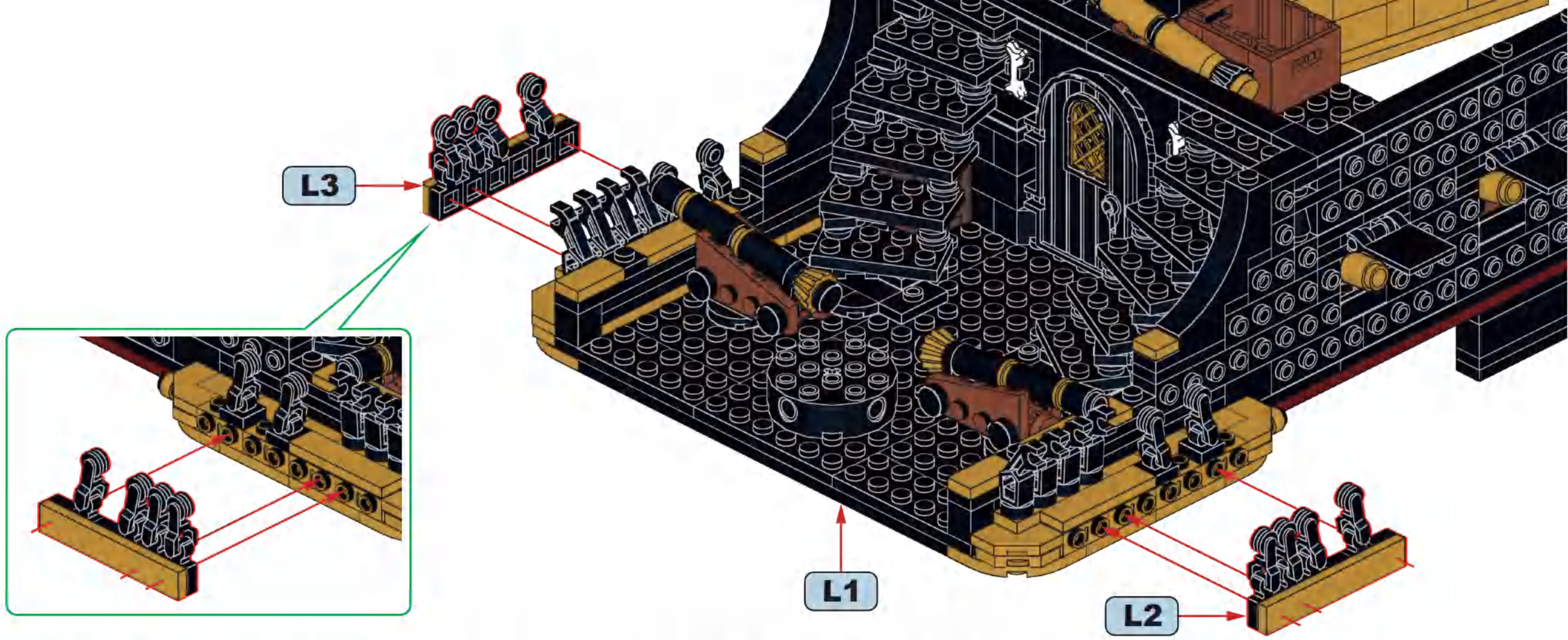

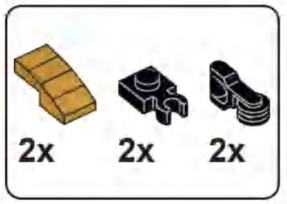

L5

x2

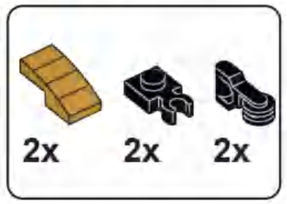

L6

x2

L7

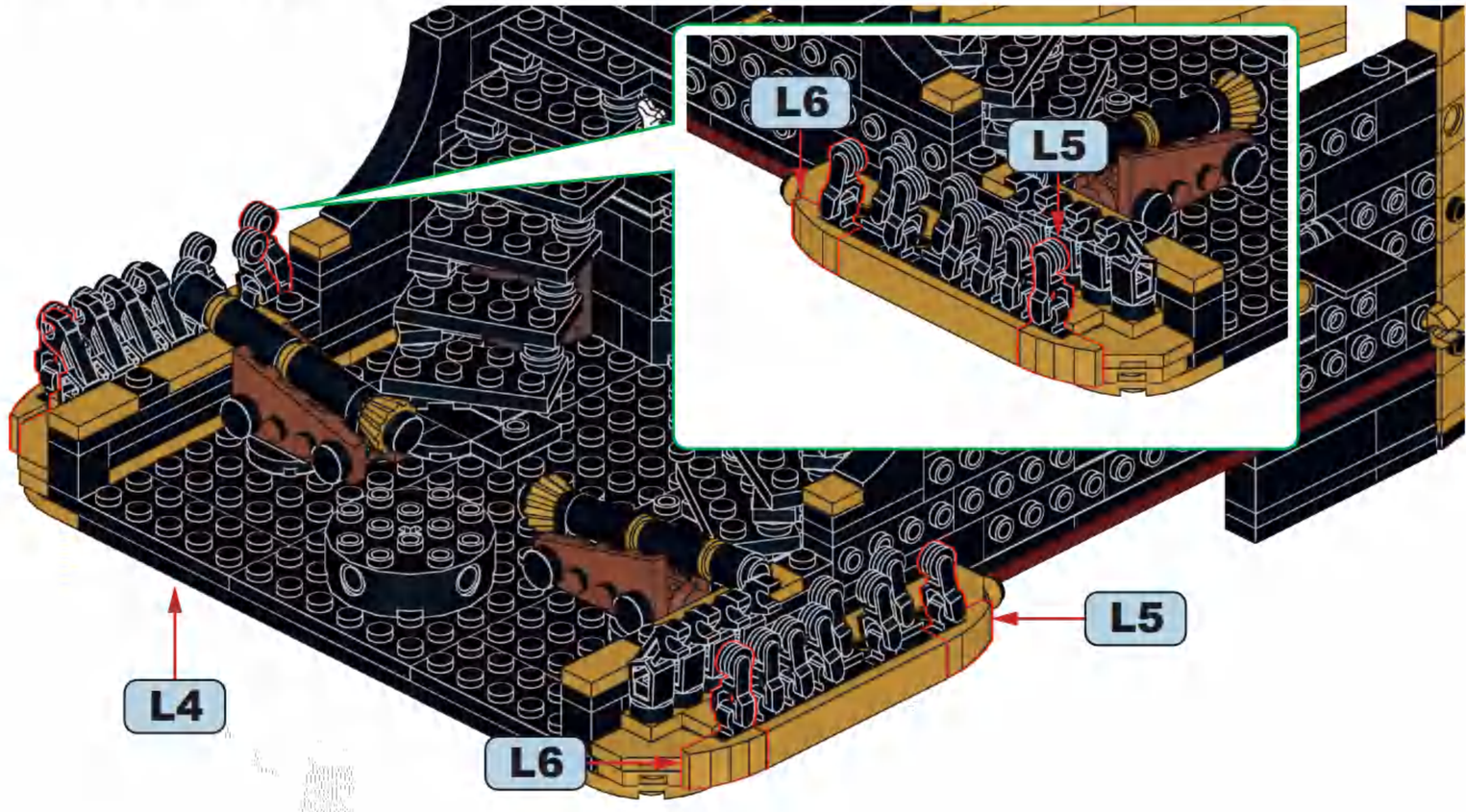

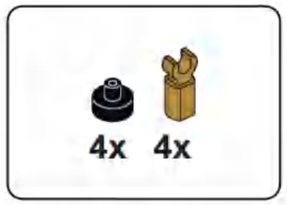

L8

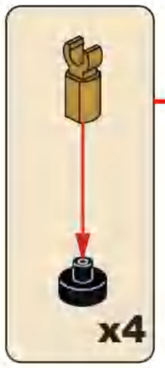

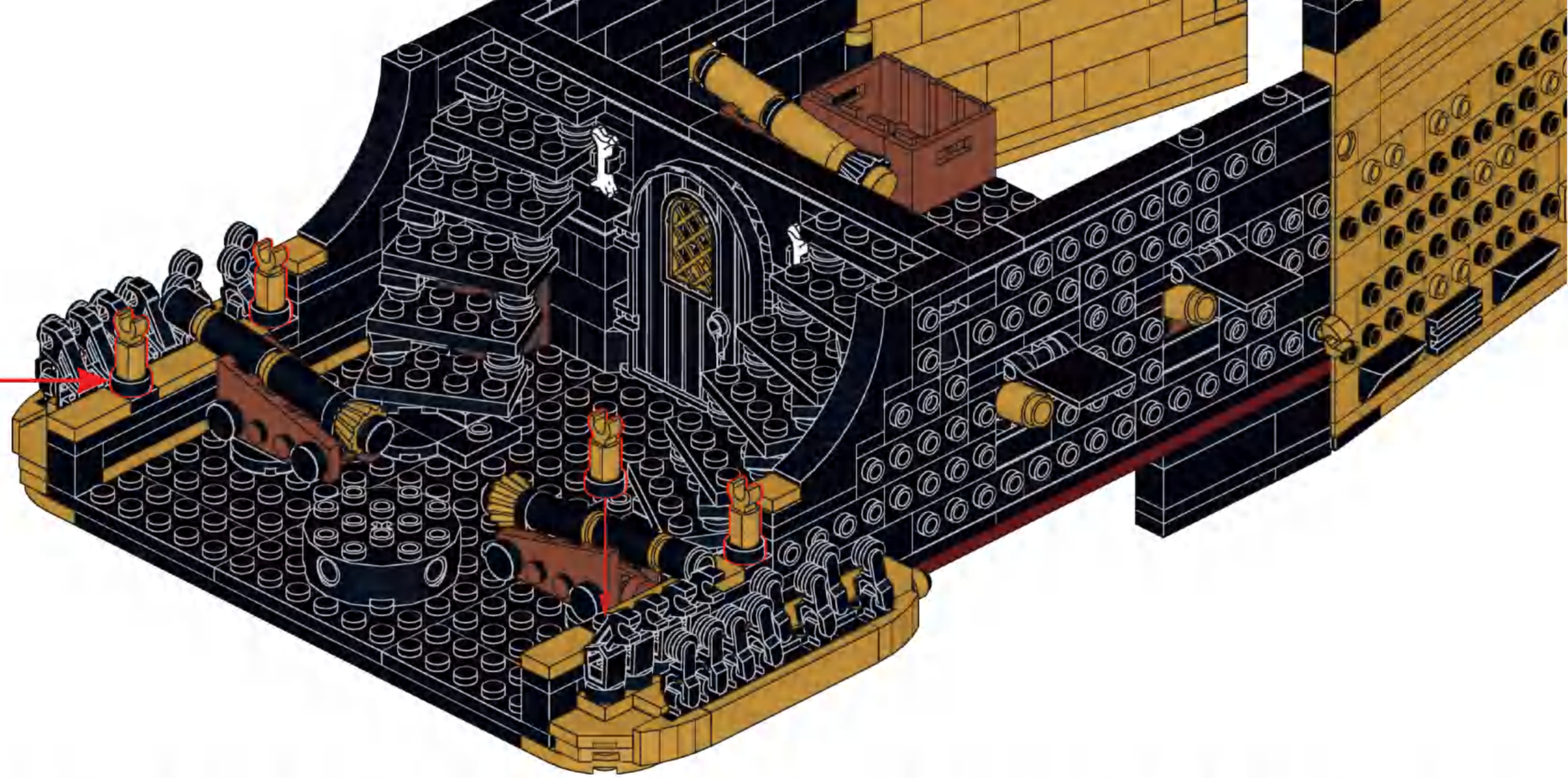

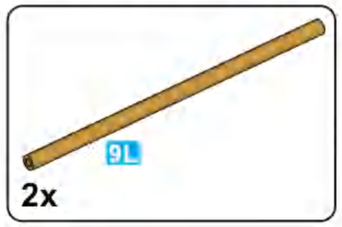

L9

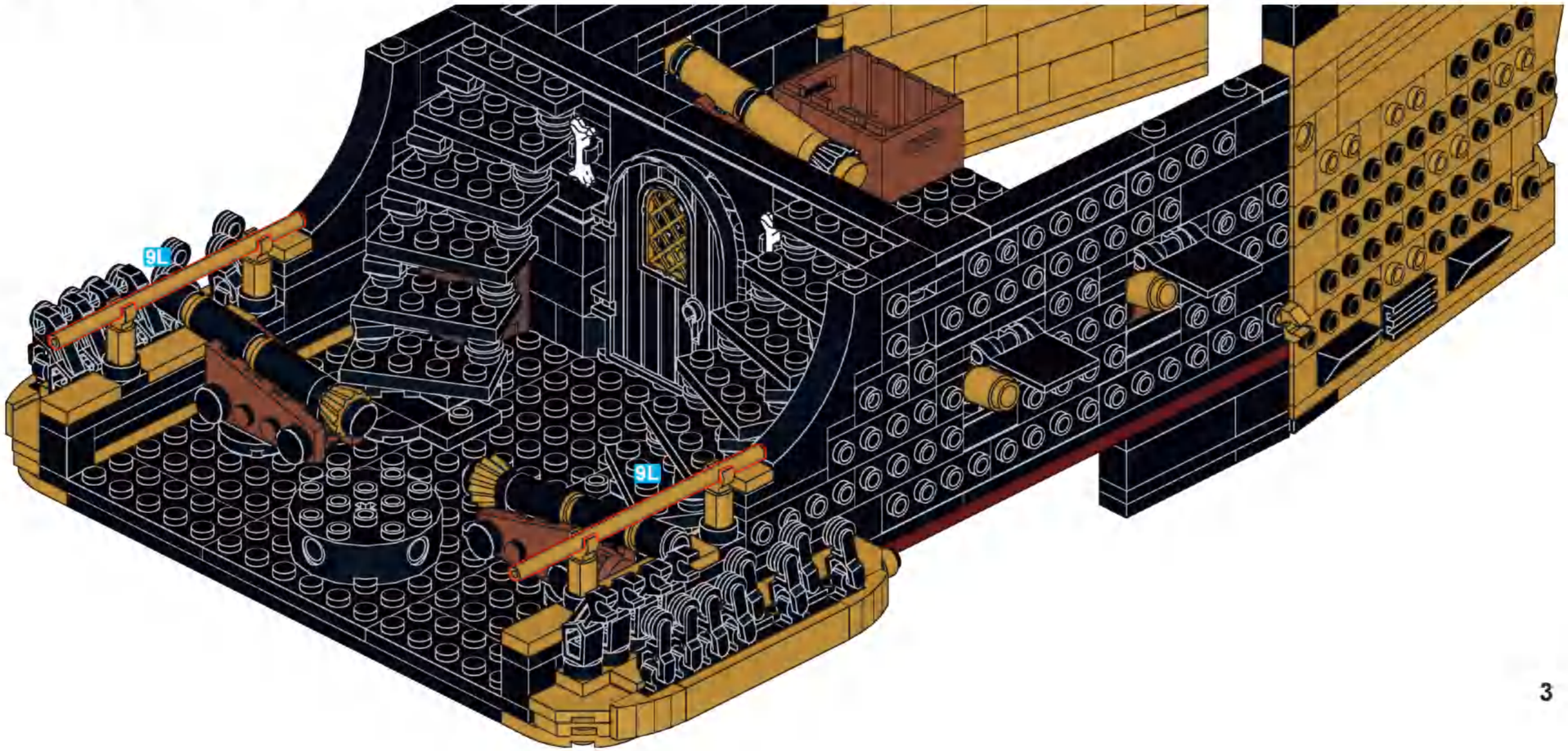

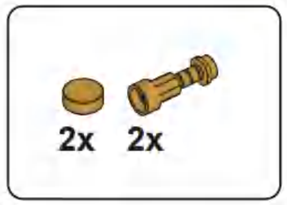

L10

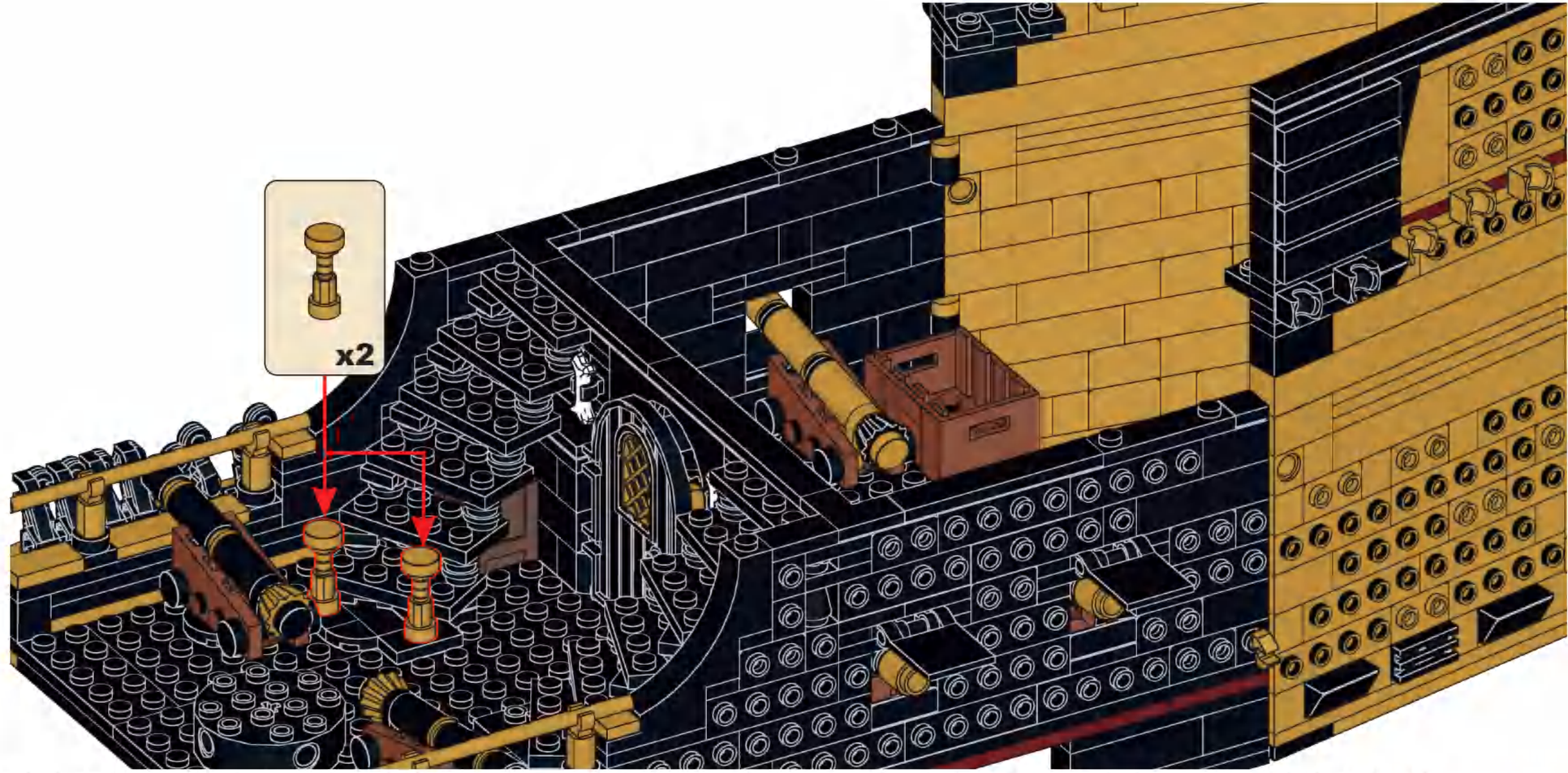

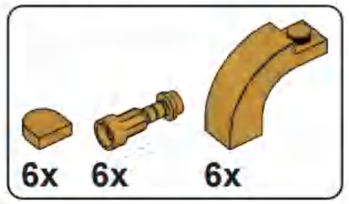

L11

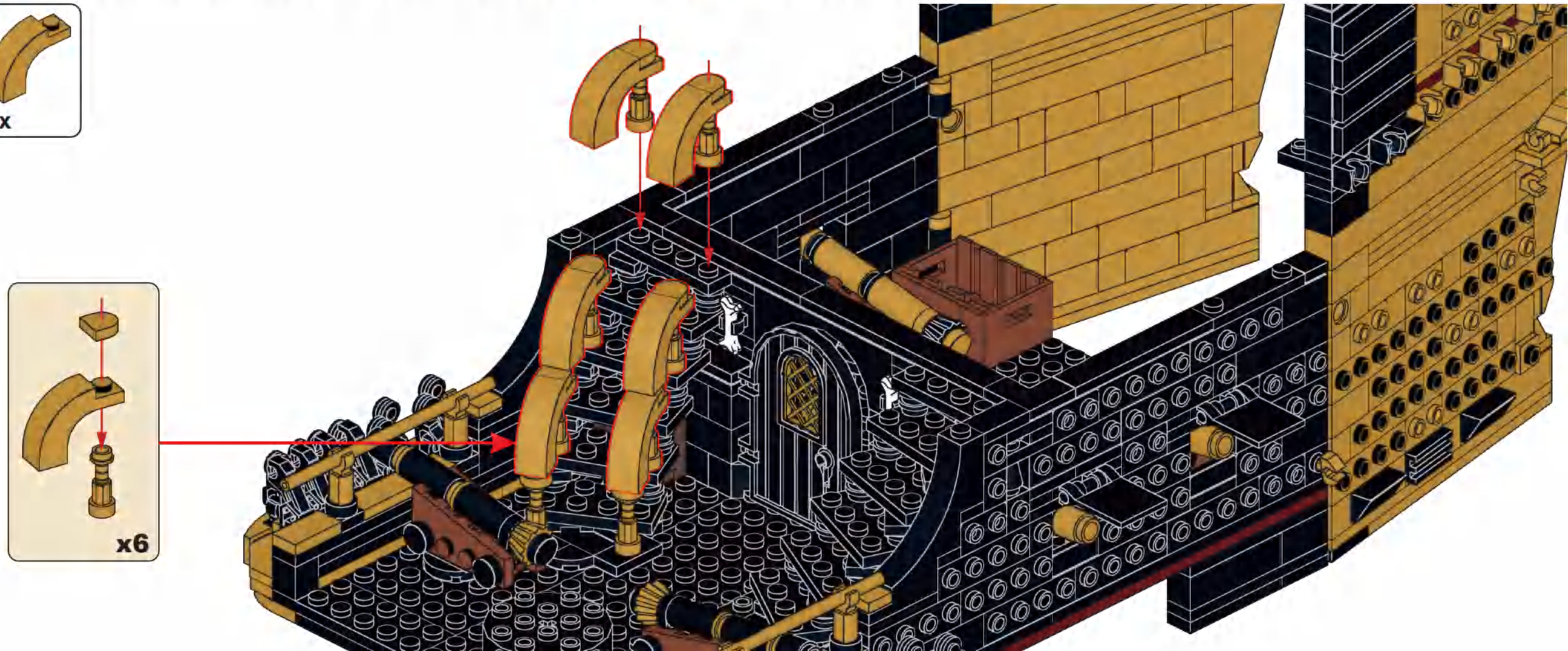

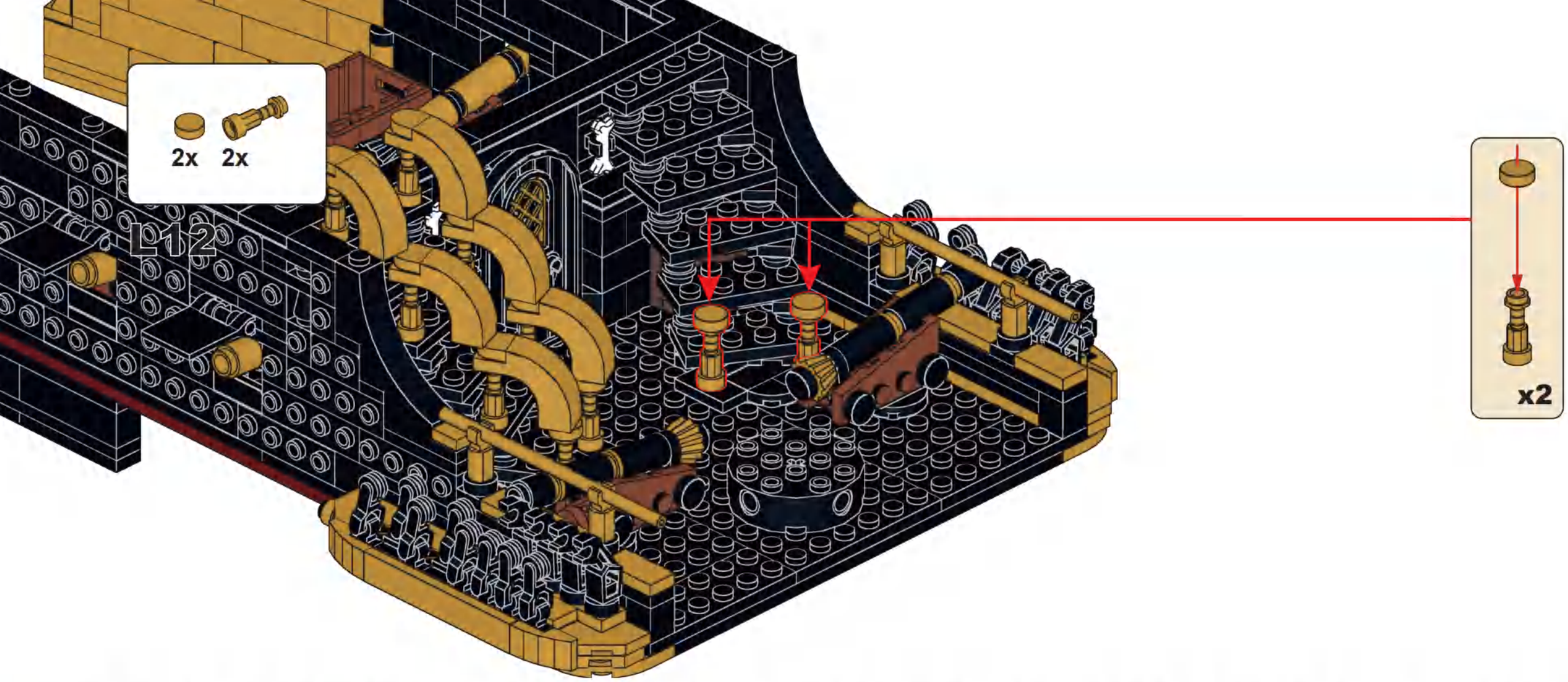
2x
2x
L12
x2

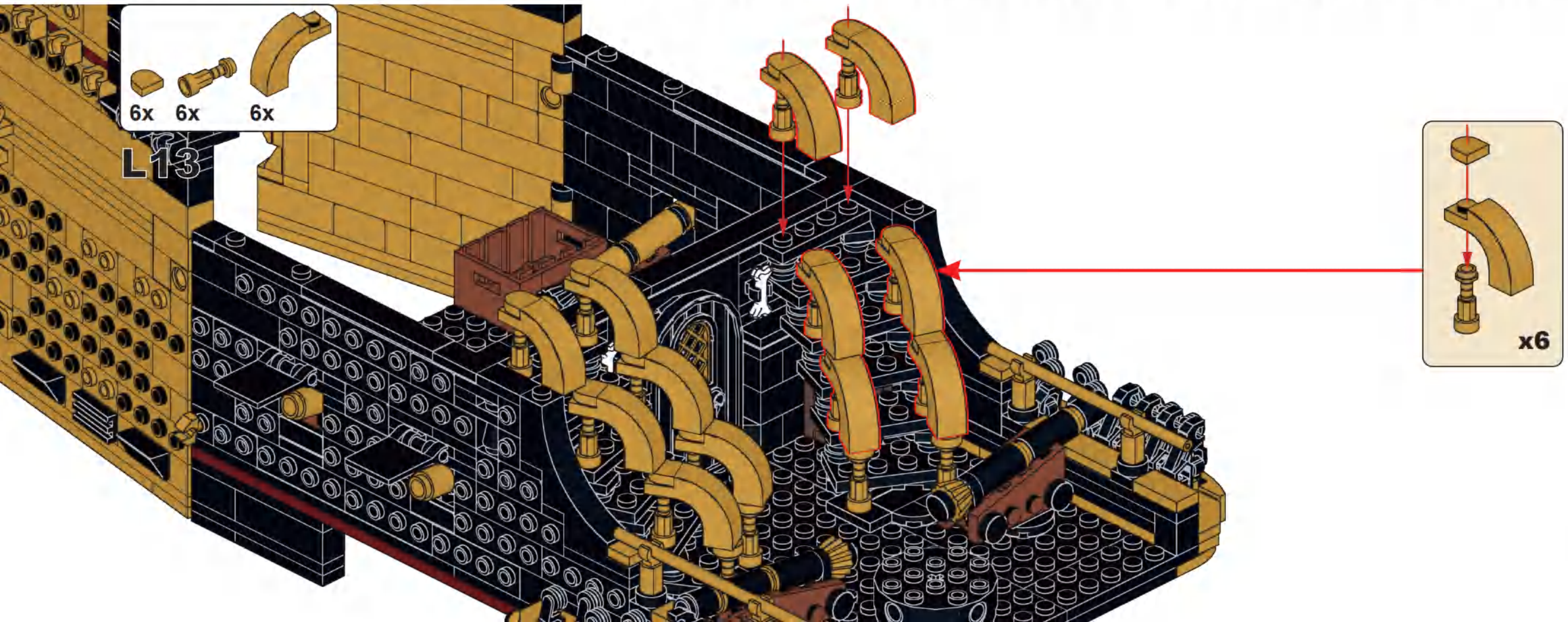
6x
6x
6x
L13
x6

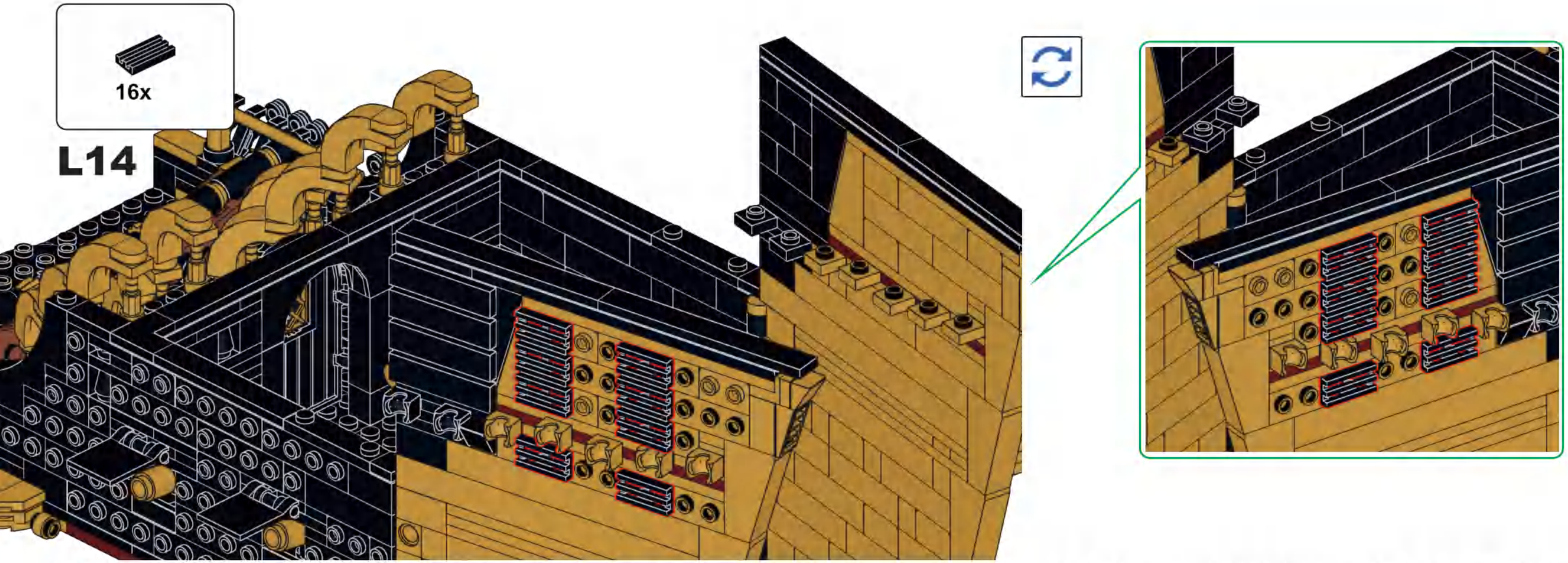
16x
L14

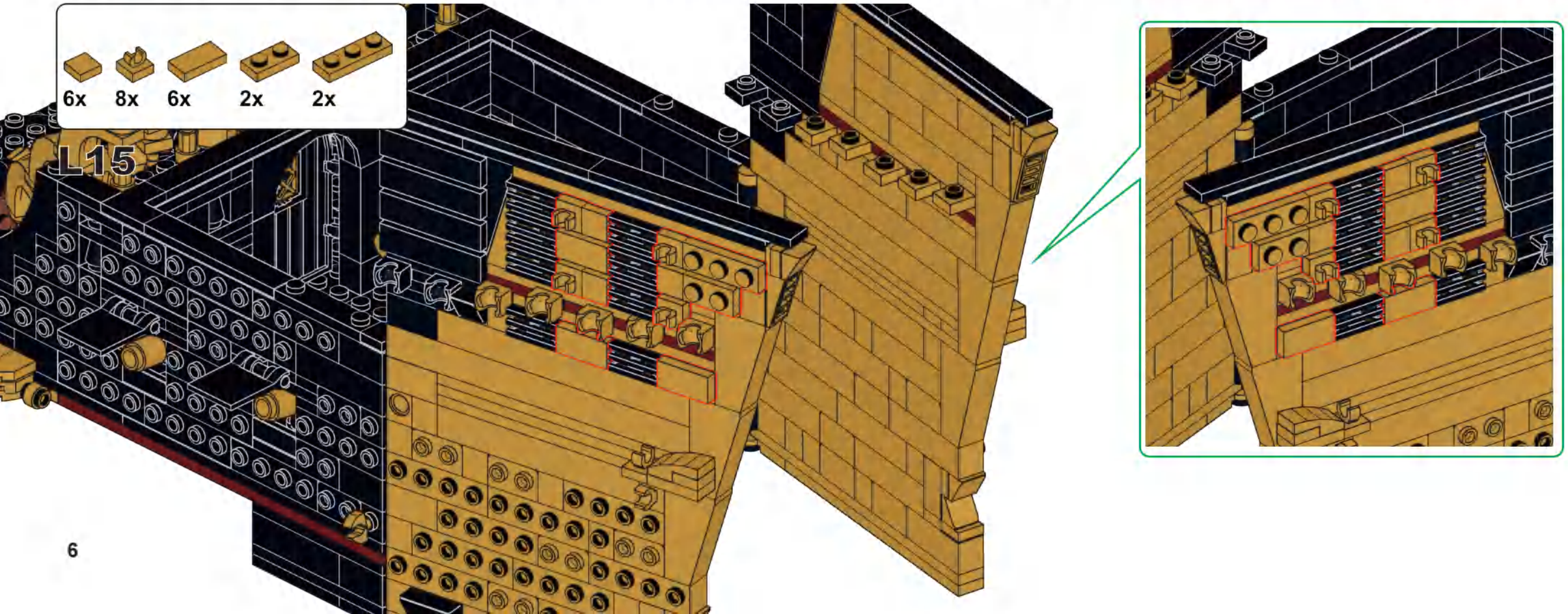
6x
8x
6x
2x
2x
L15

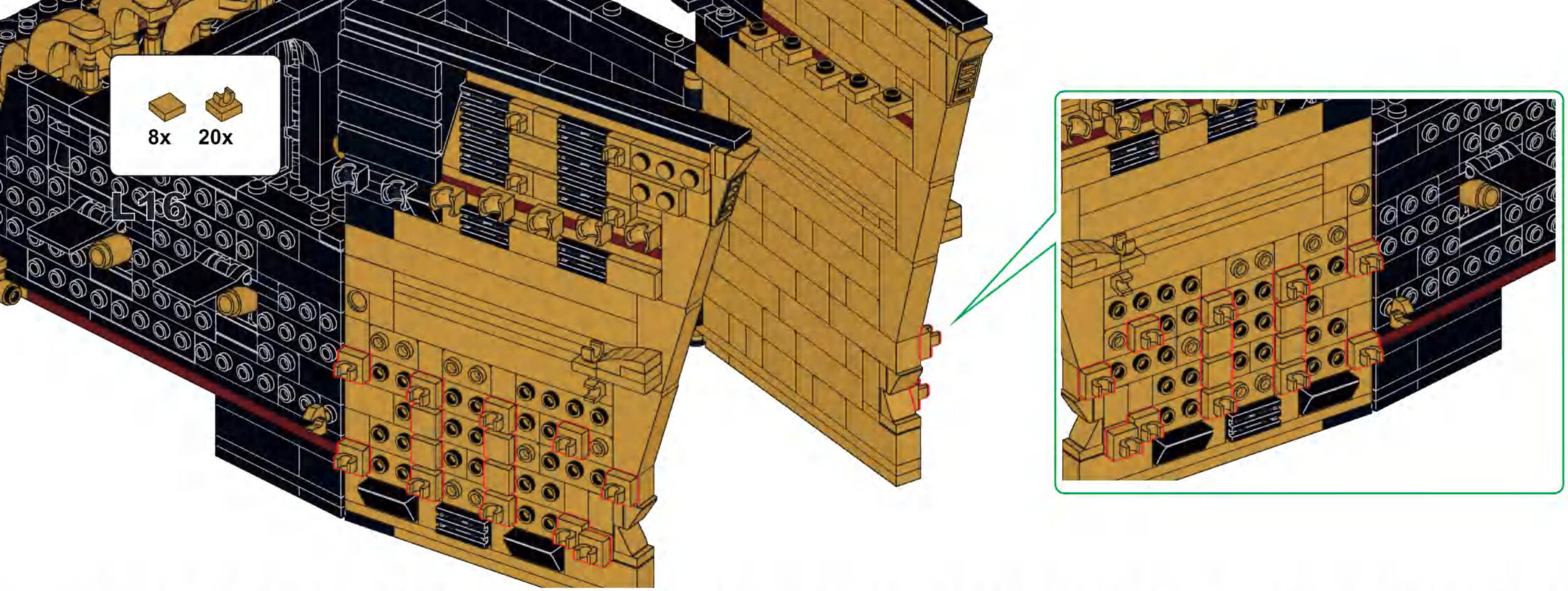
8x
20x
L16

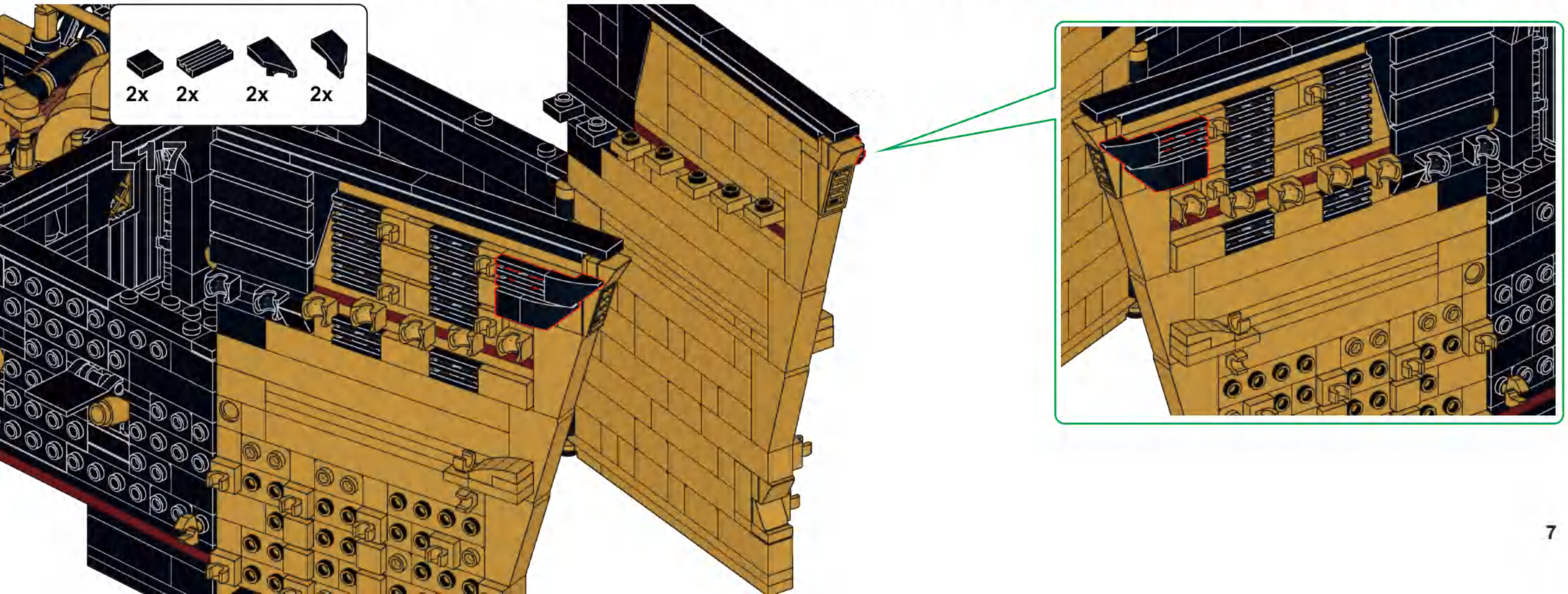
2x
2x
2x
2x
L17

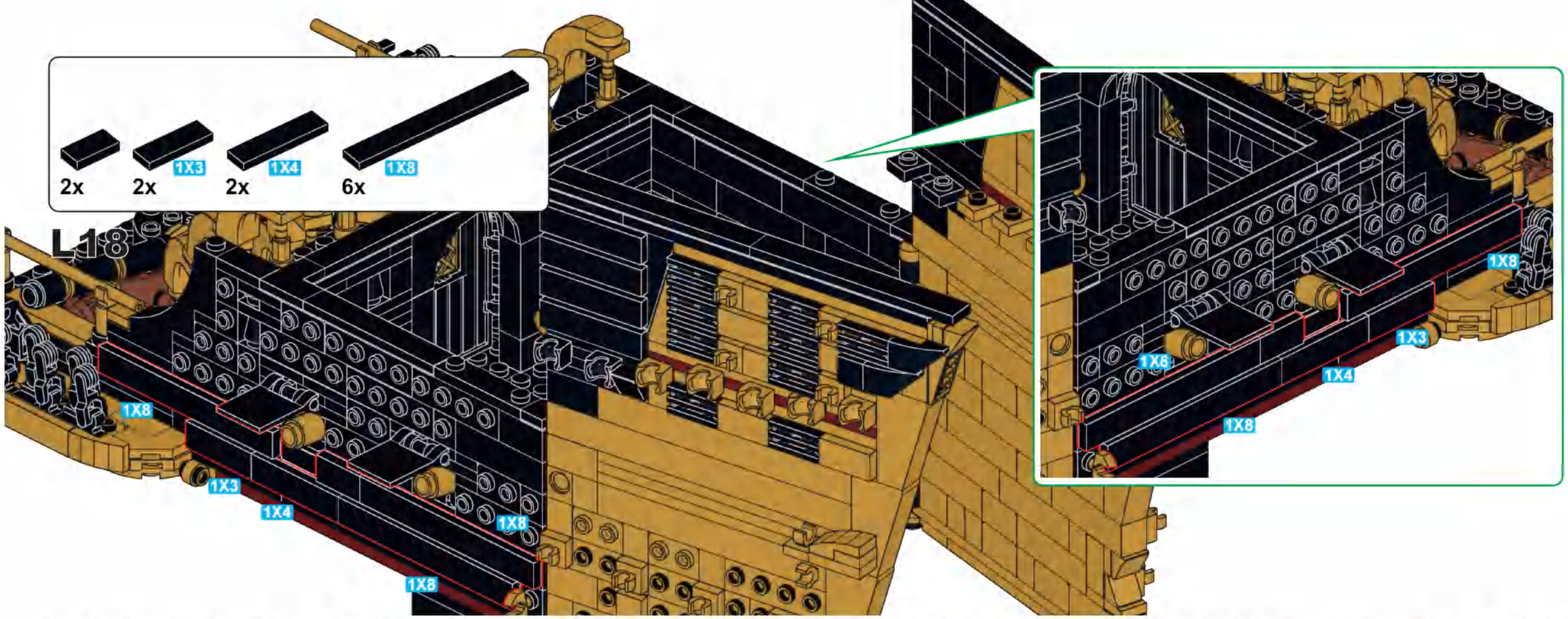
2x
2x
1X3
2x
1X4
6x
1X8
L18
1X8
1X3
1X4
1X8
1X8
1X8
1X3
1X4
1X8

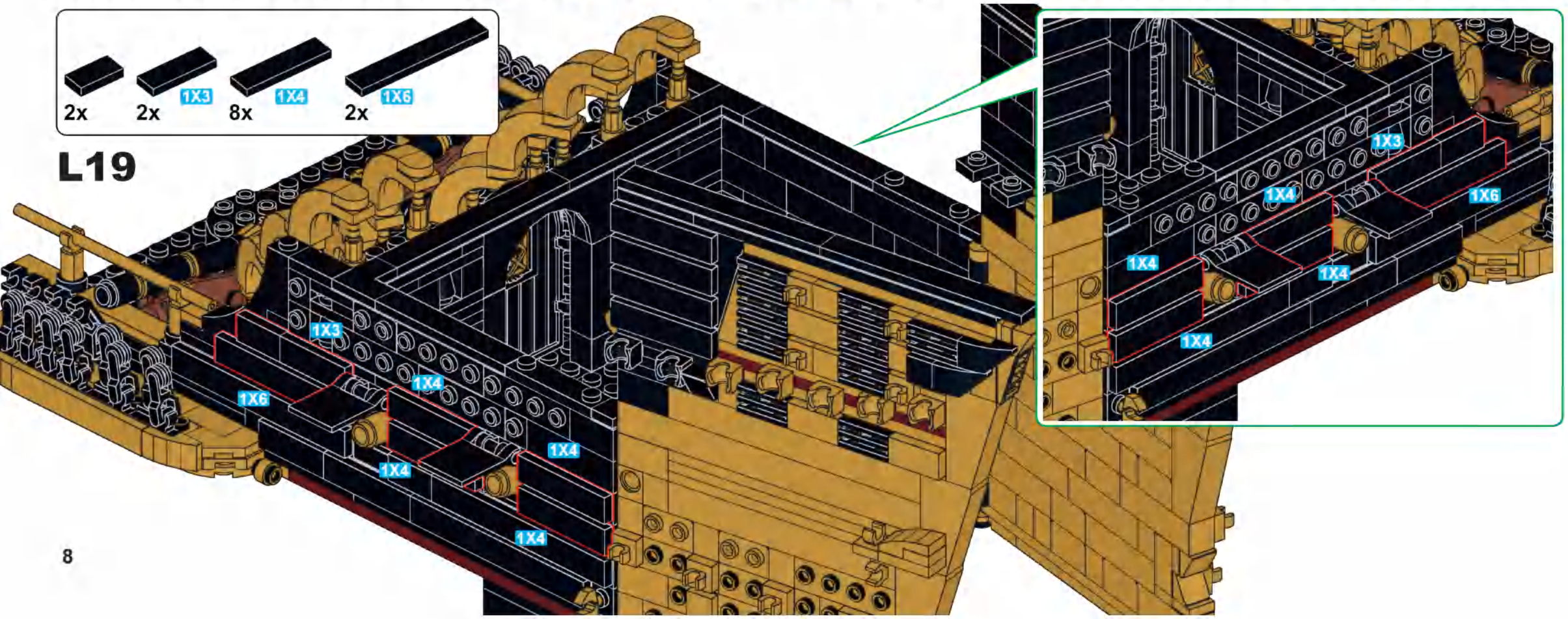
2x
2x
1X3
8x
1X4
2x
1X6
L19
1X3
1X6
1X4
1X4
1X4
1X4
1X3
1X4
1X6
1X4
1X4
1X4

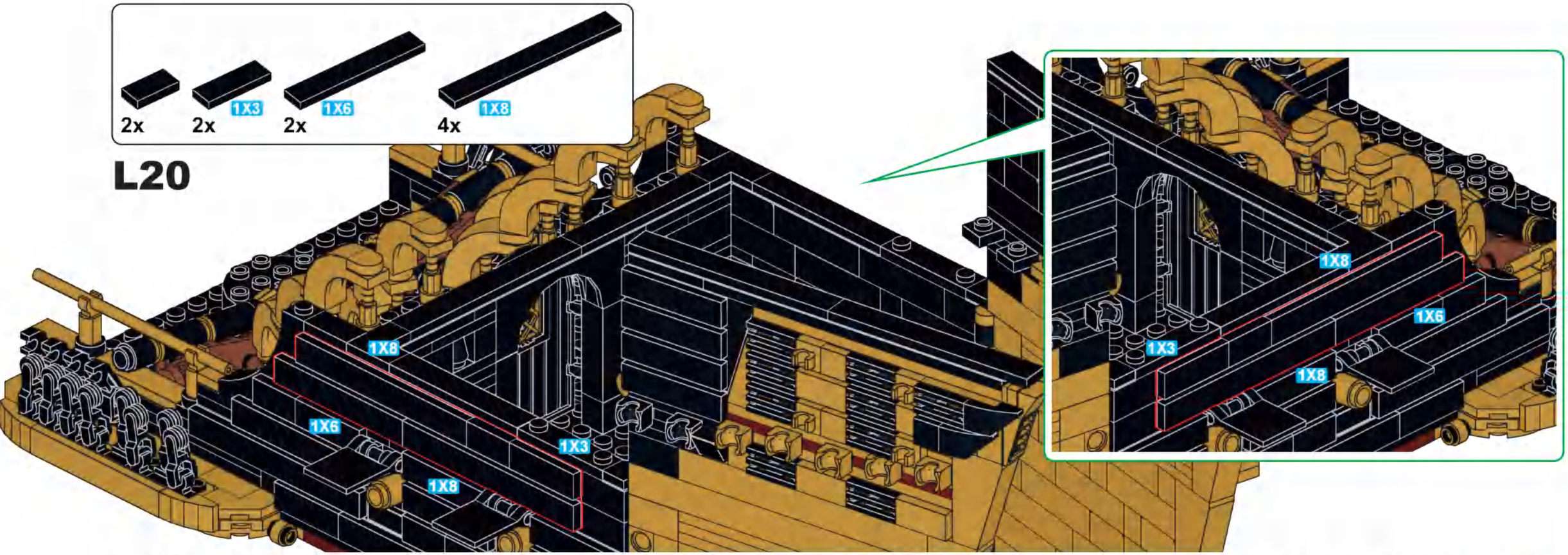
2x
2x
1X3
2x
1X6
4x
1X8
L20
1X8
1X6
1X3
1X8
1X8
1X6
1X3
1X8

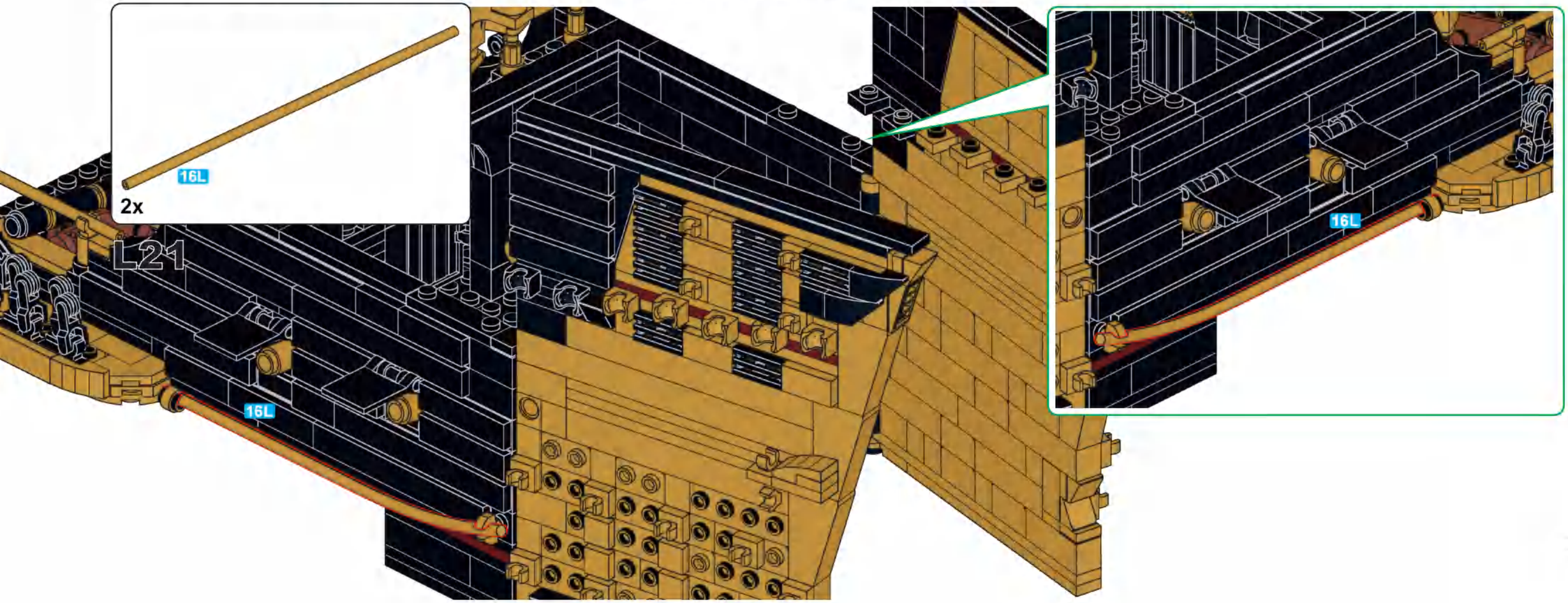
16L
2x
L21
16L
16L

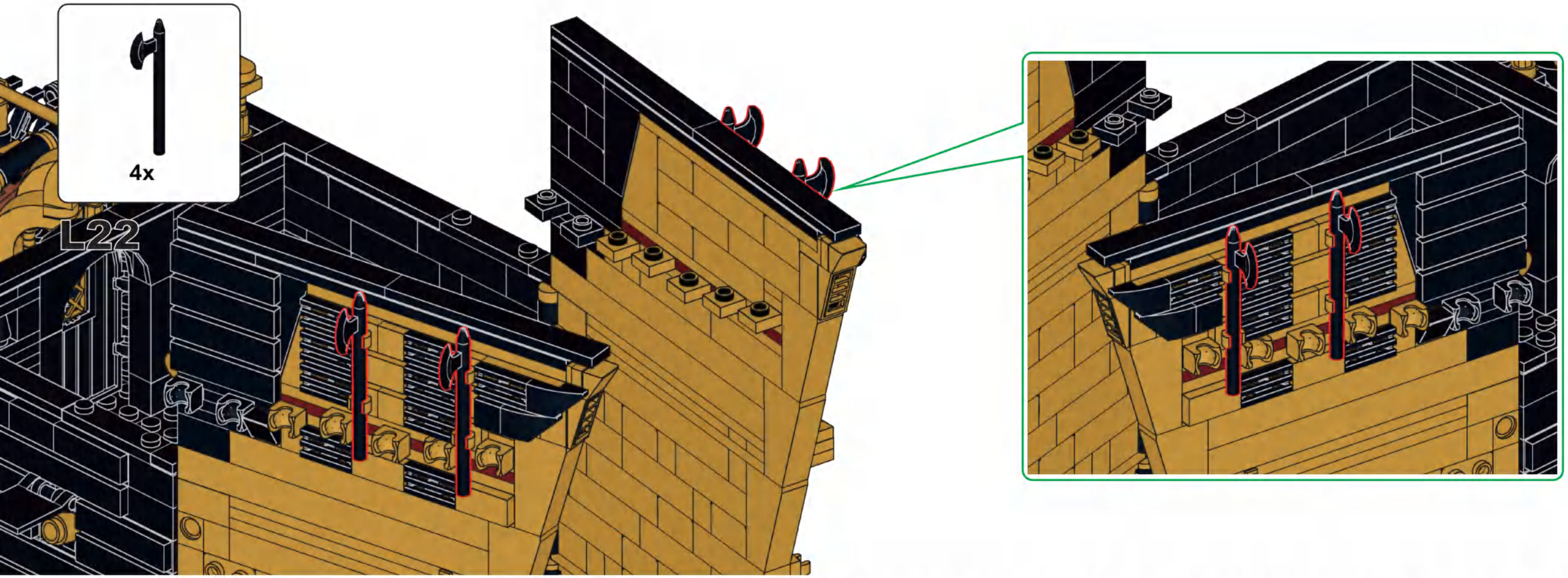

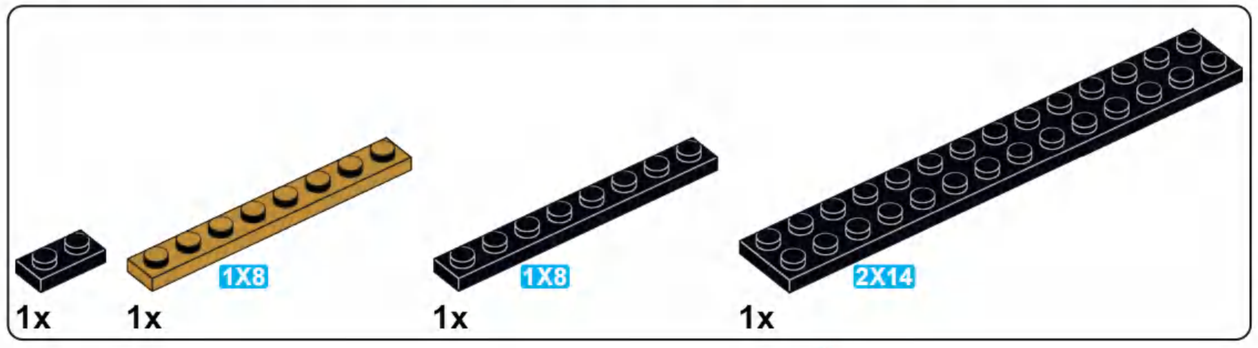

L23

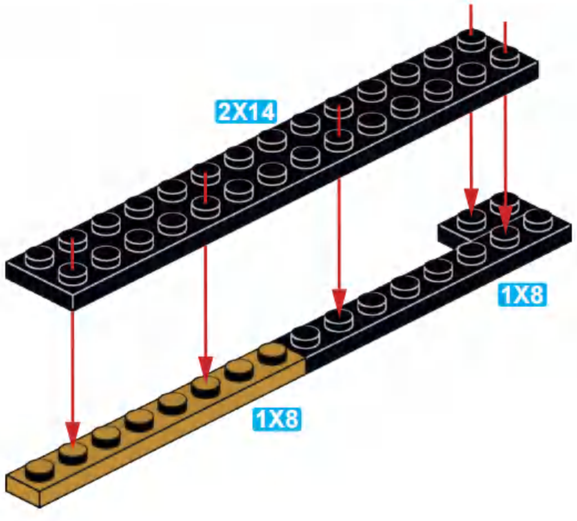

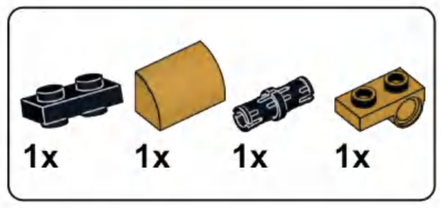

L24

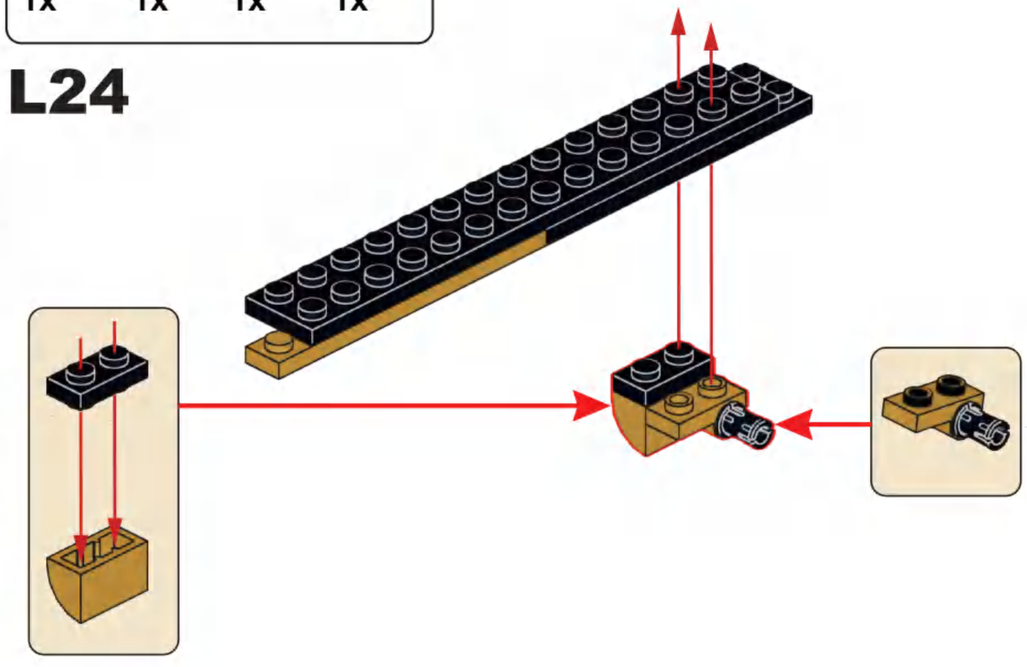

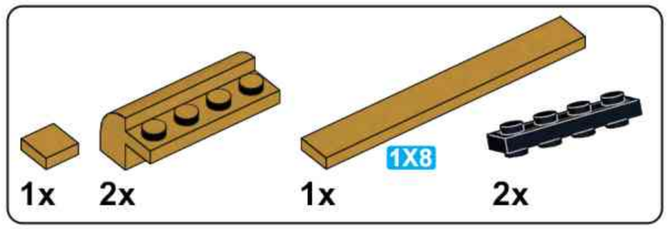

L25

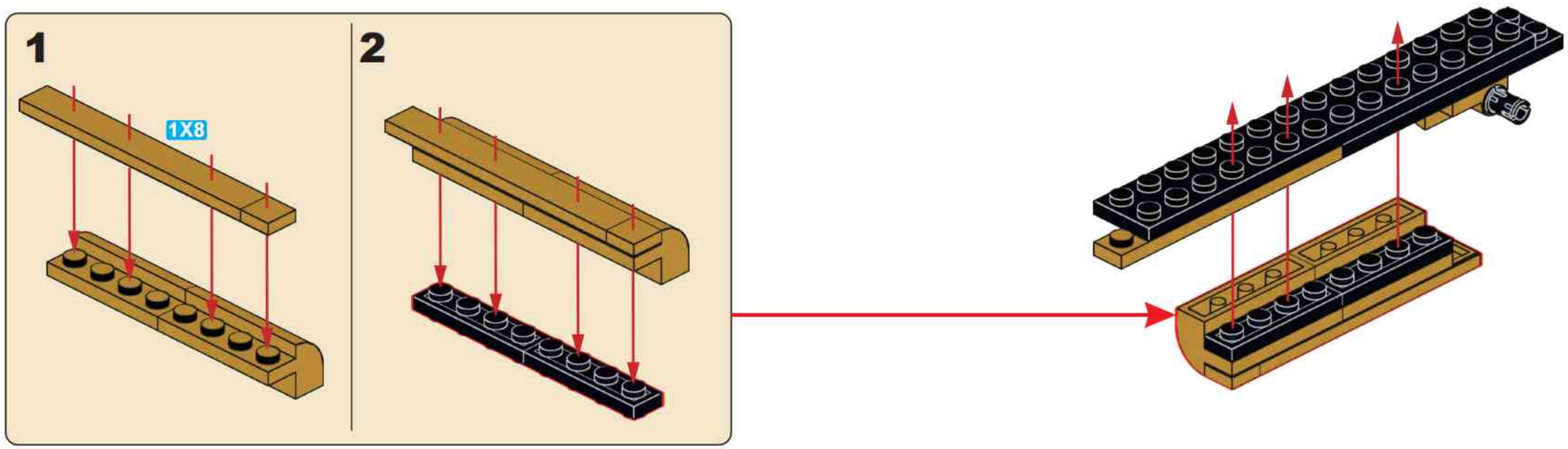

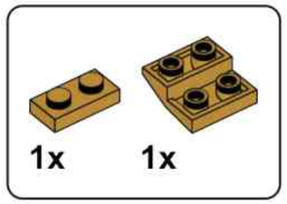

L26

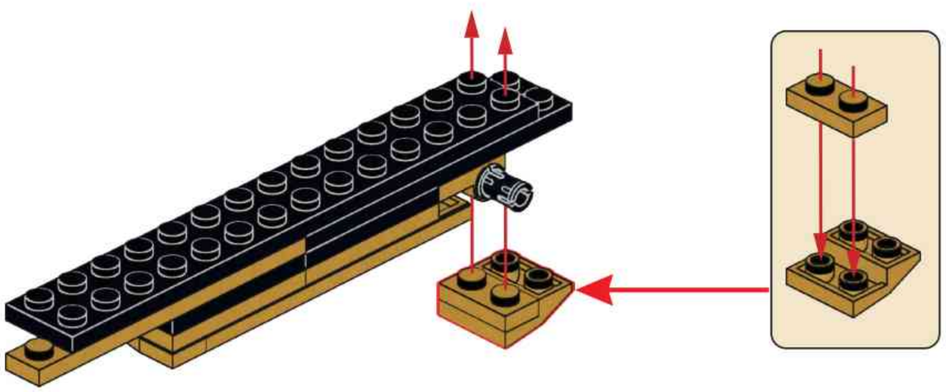

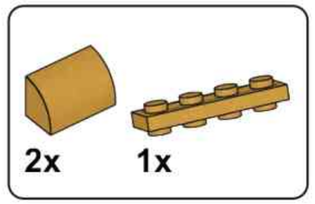

L27

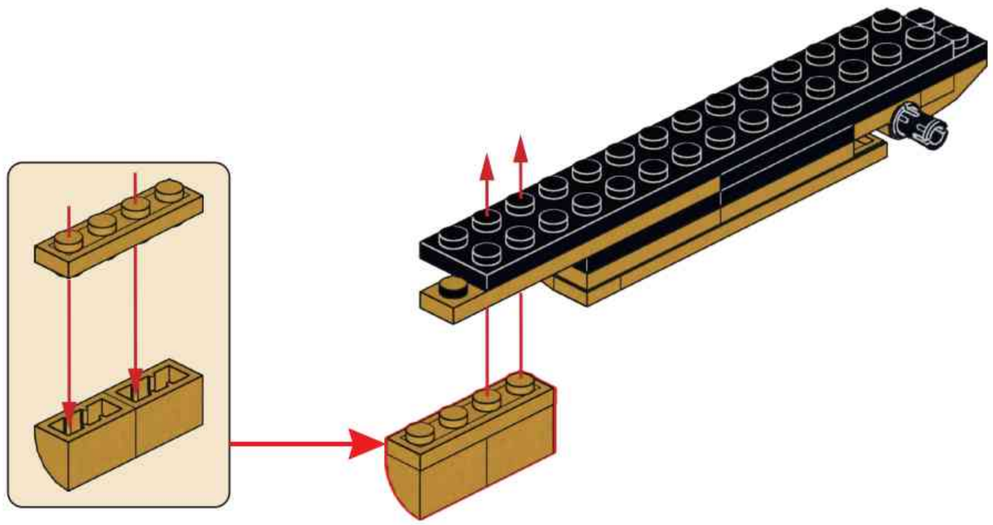

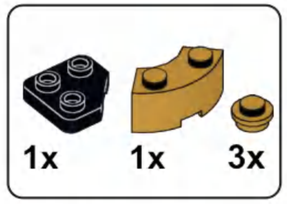

L28

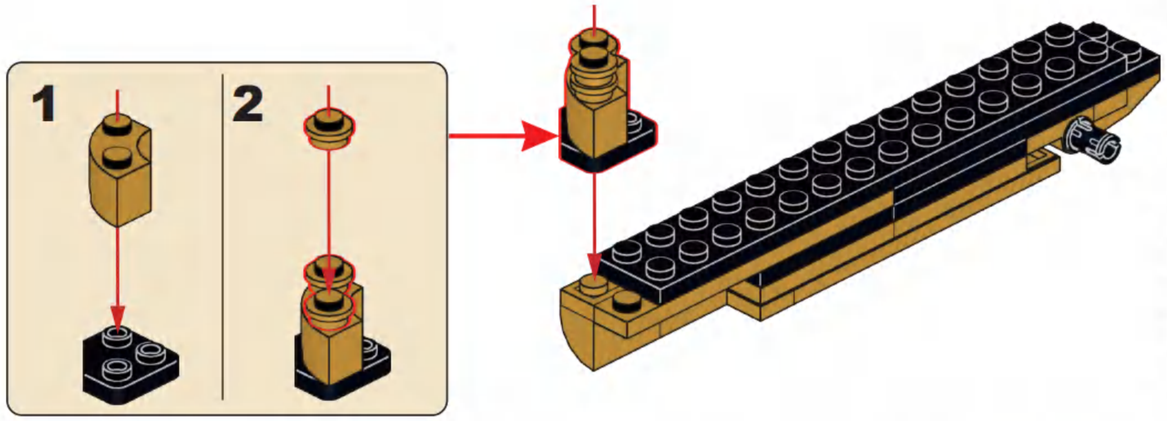

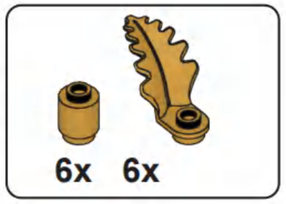

L29

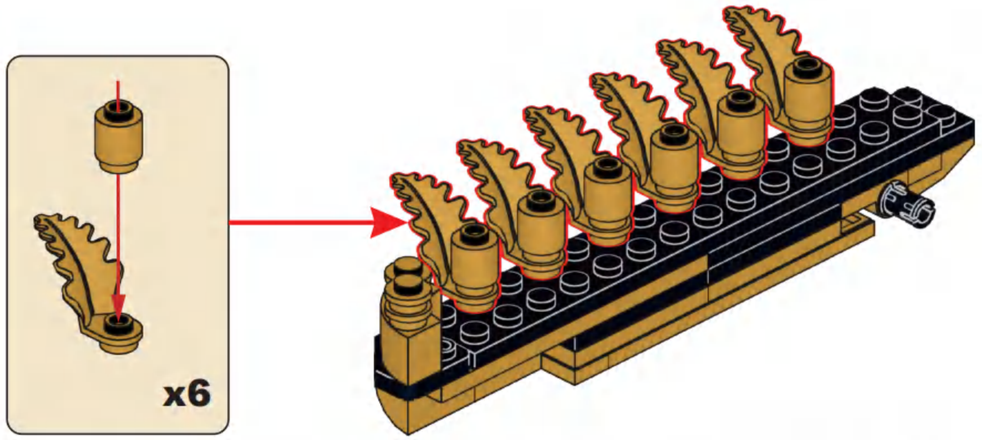

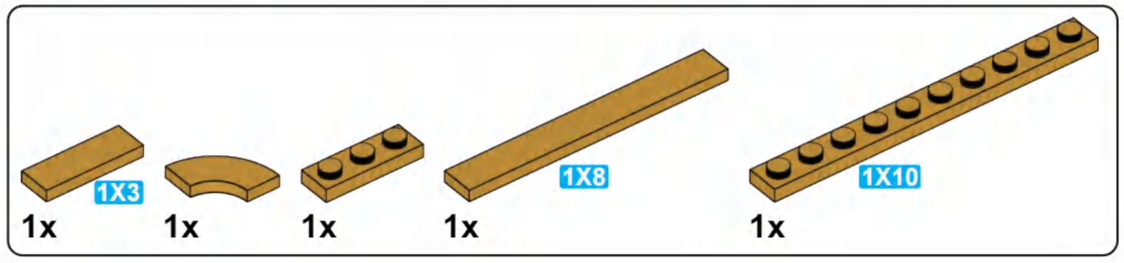

L30

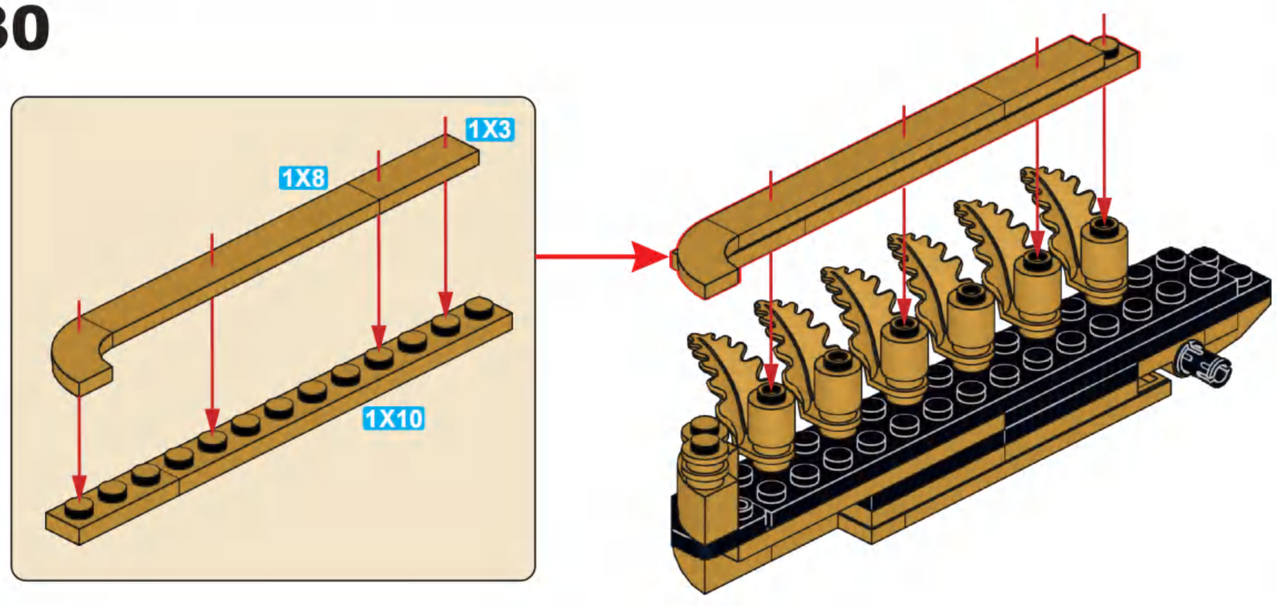

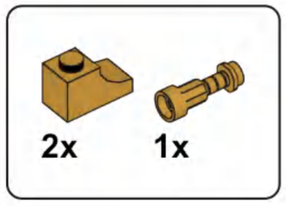

L31

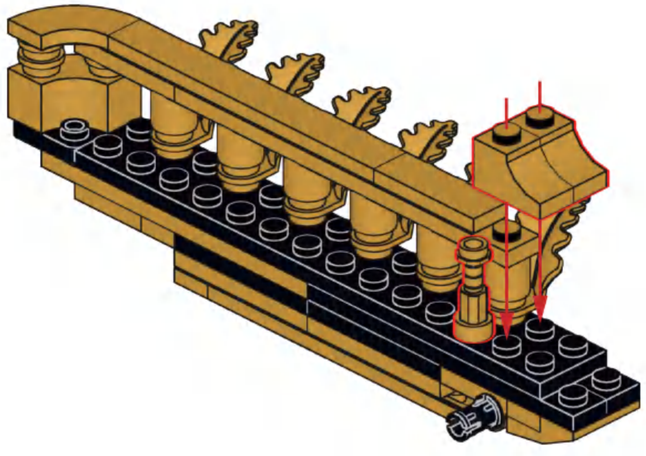

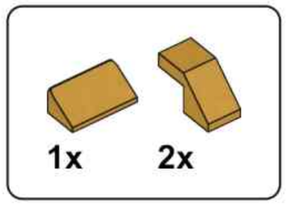

L32

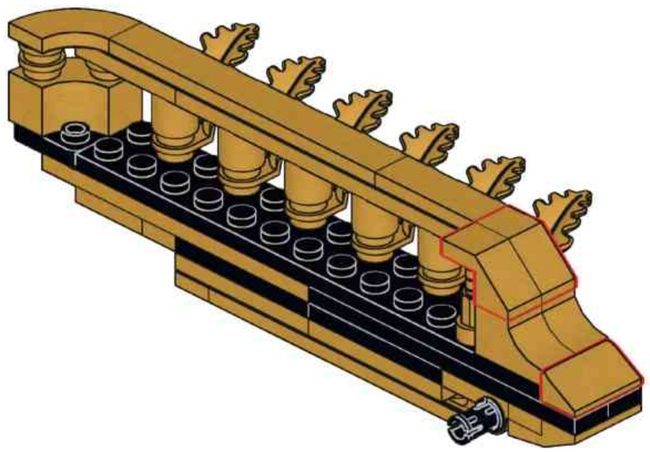

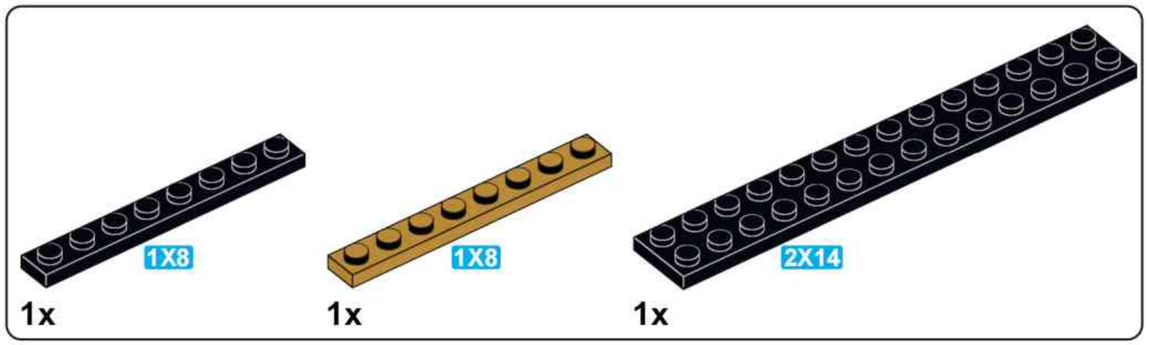

L33

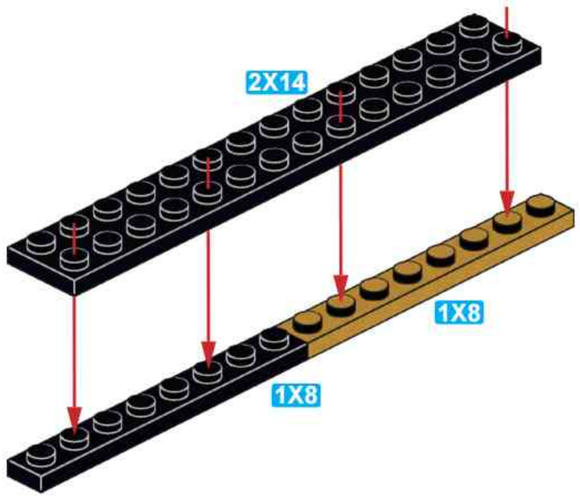

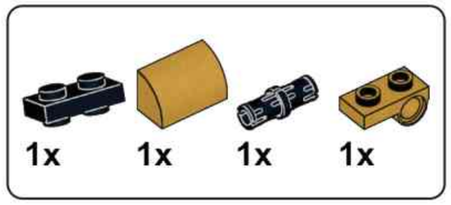

L34

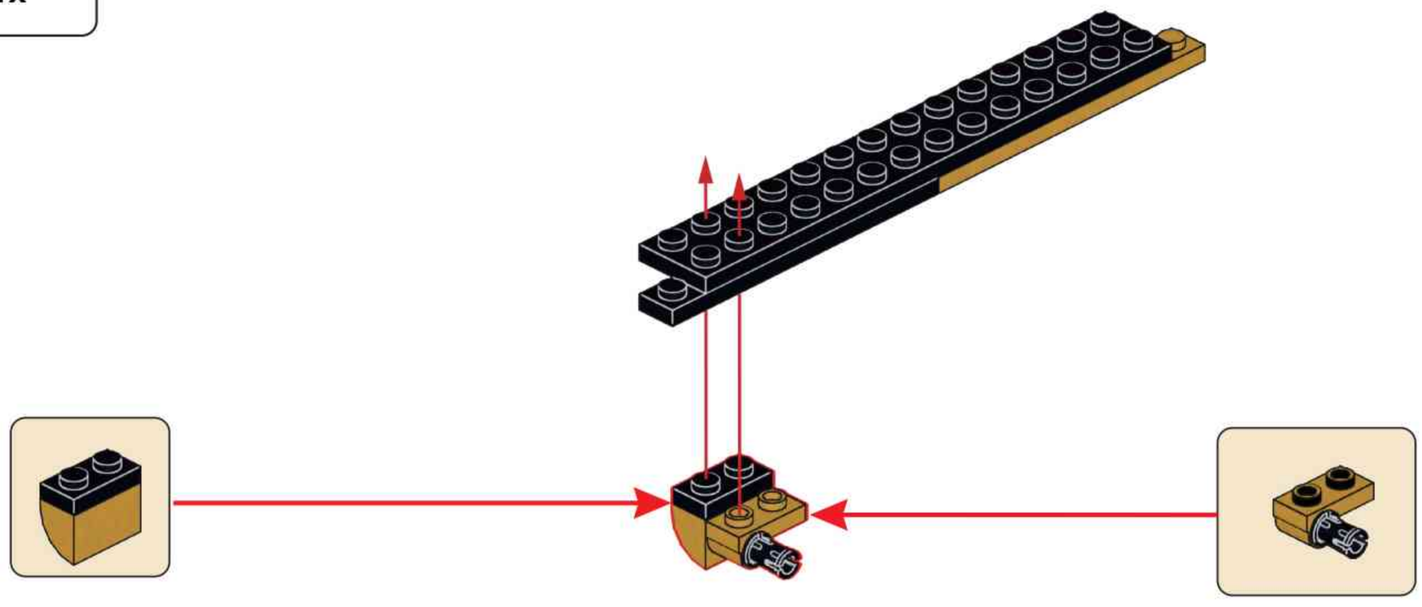

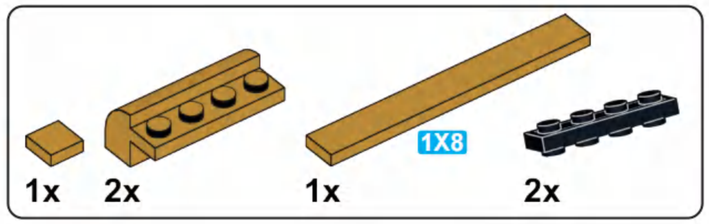

L35

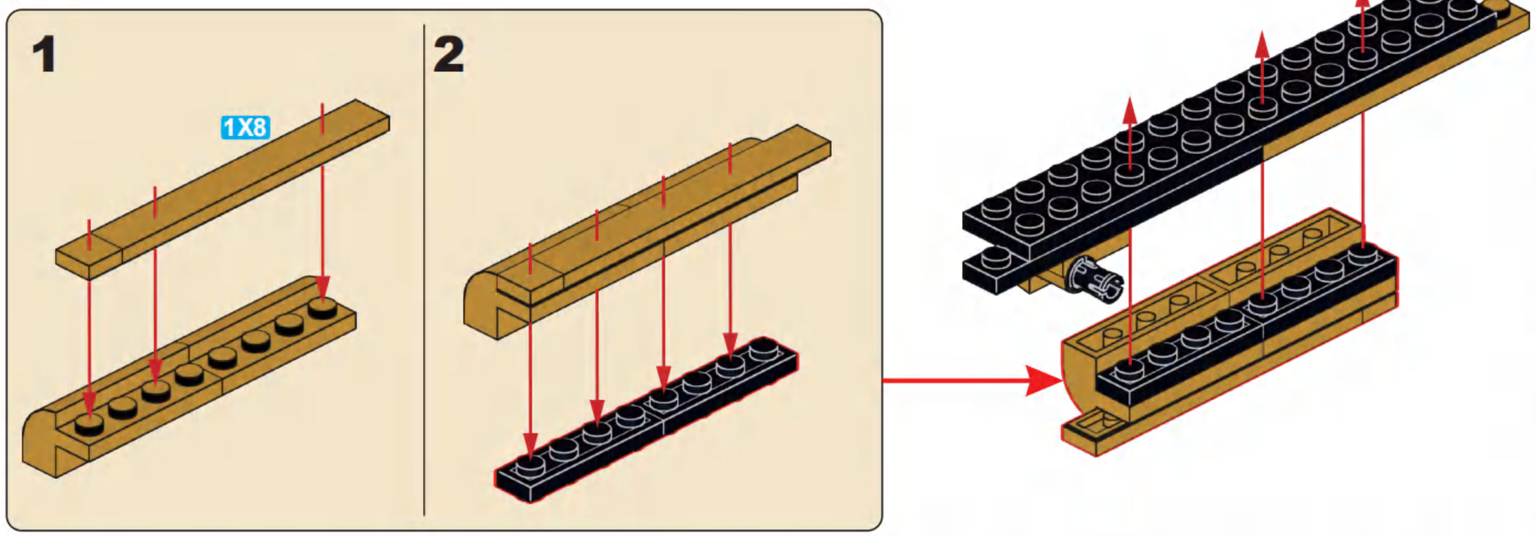

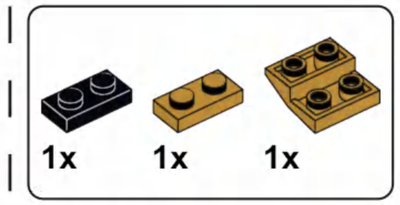

L36

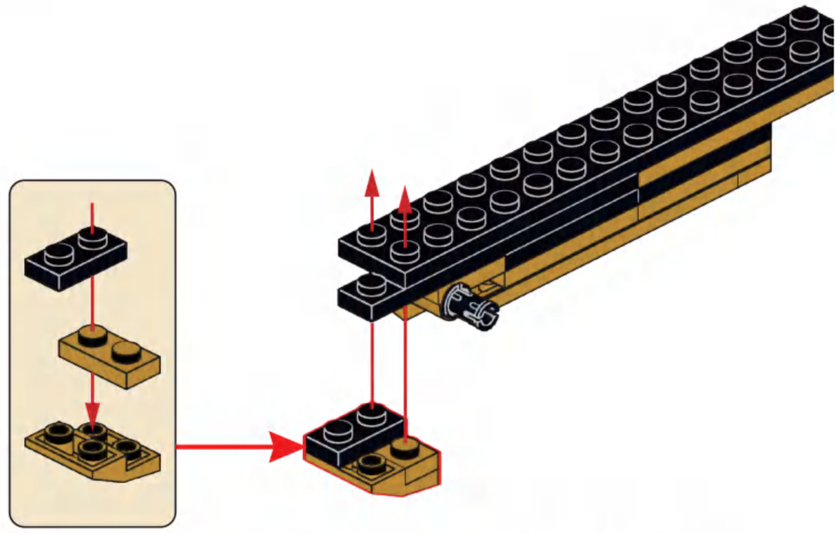

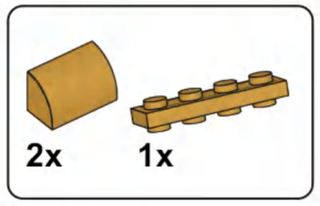

L37

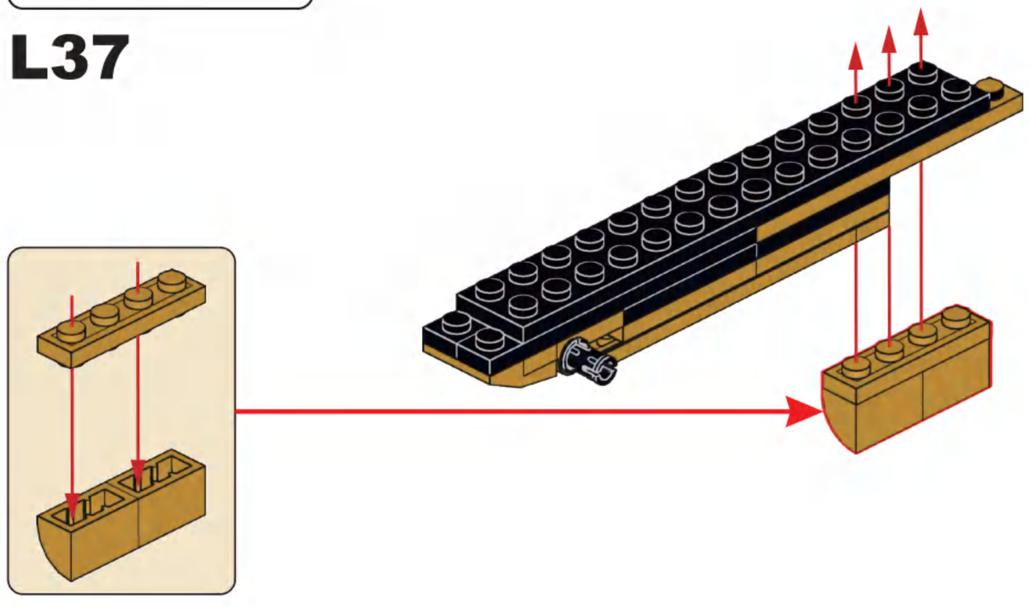

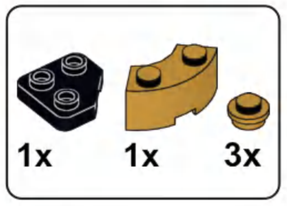

L38

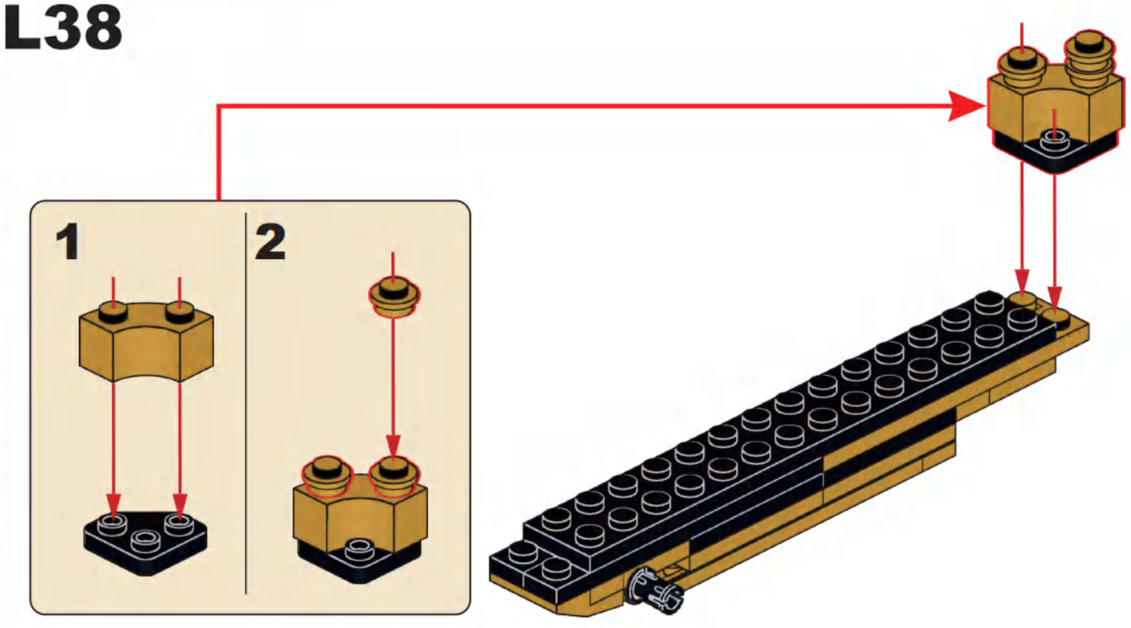

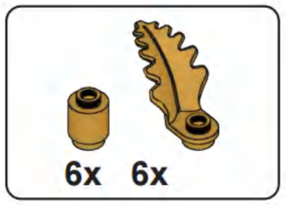

L39

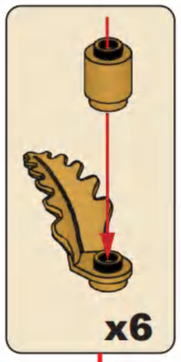

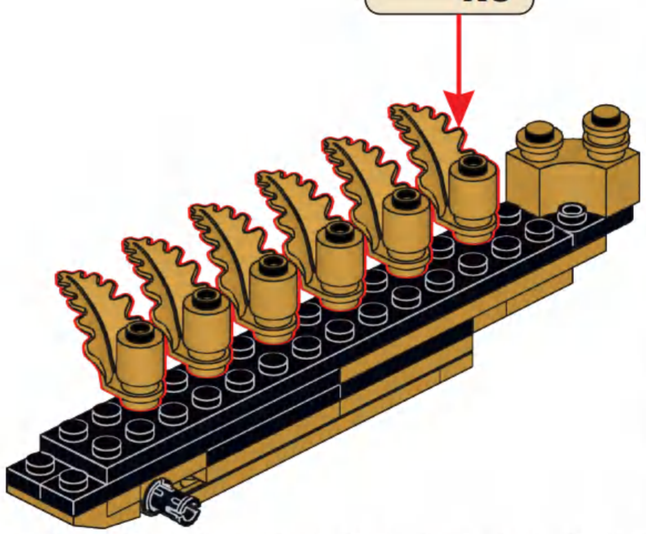

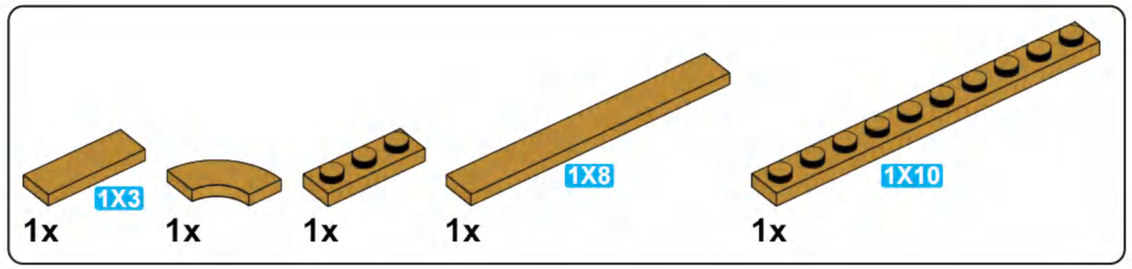

L40

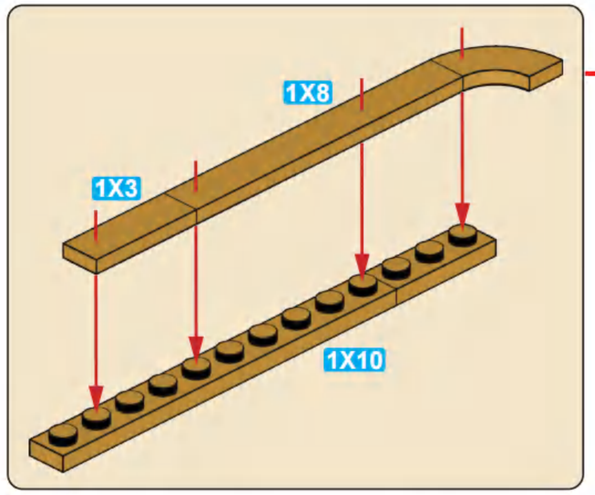

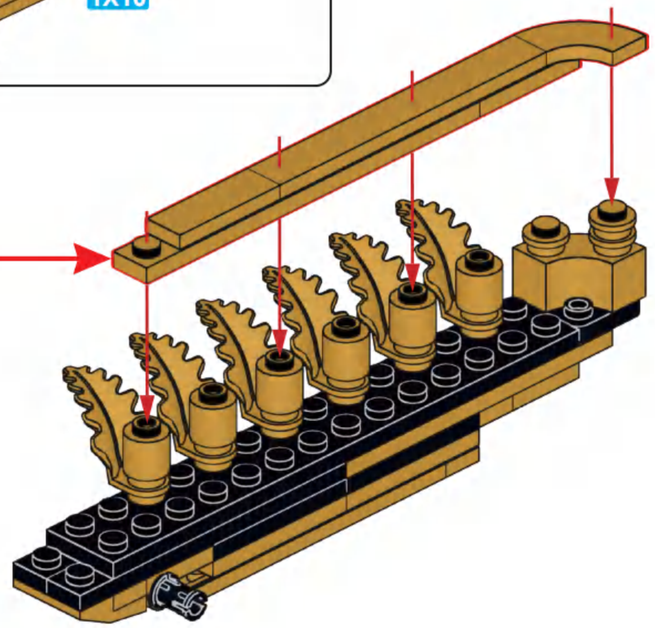

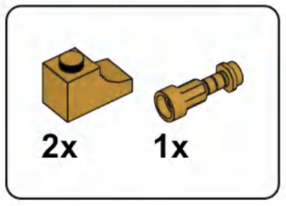

L41

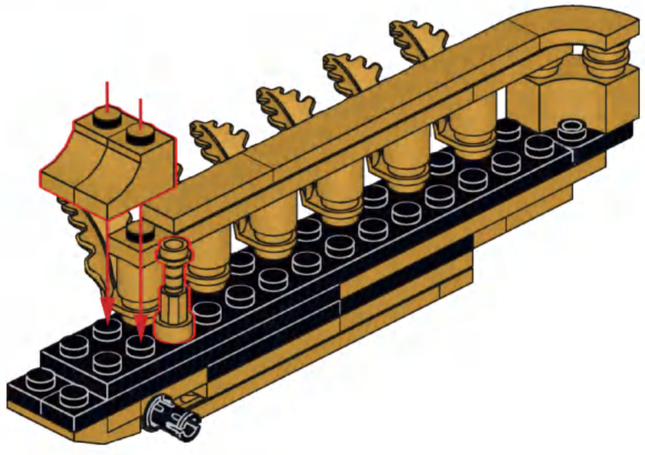

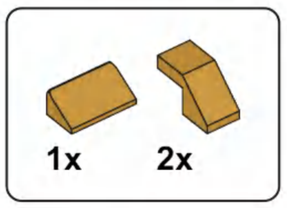

L42

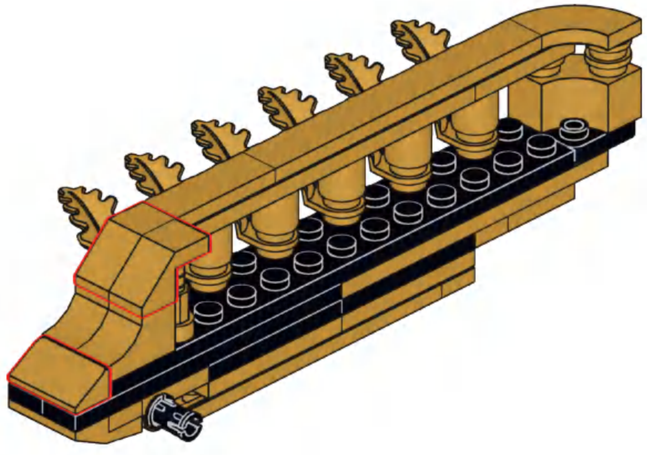

L43

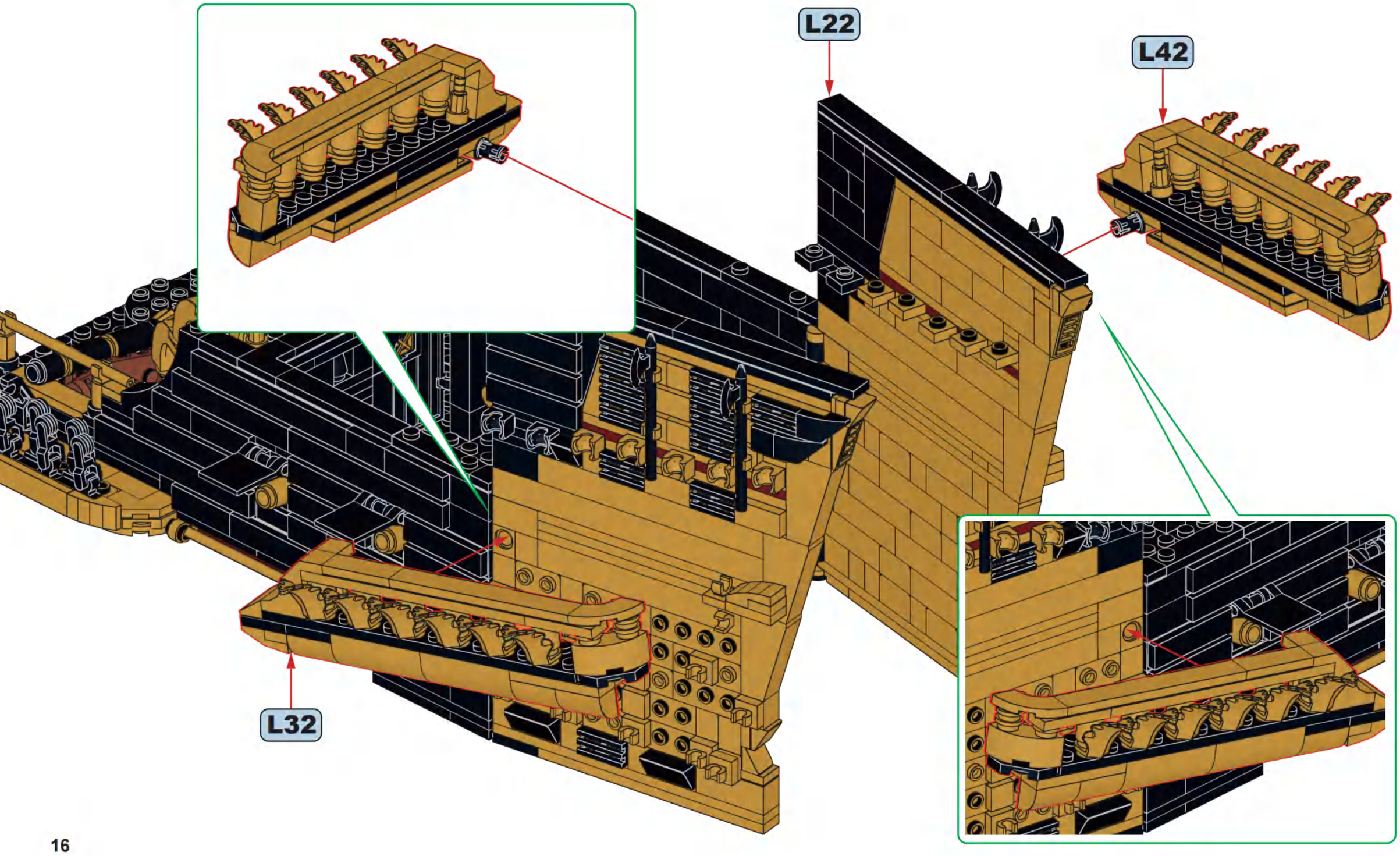

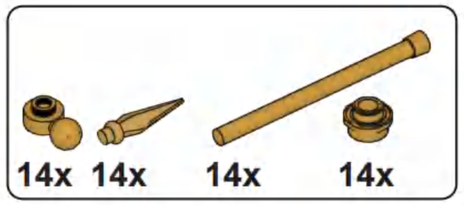

L44

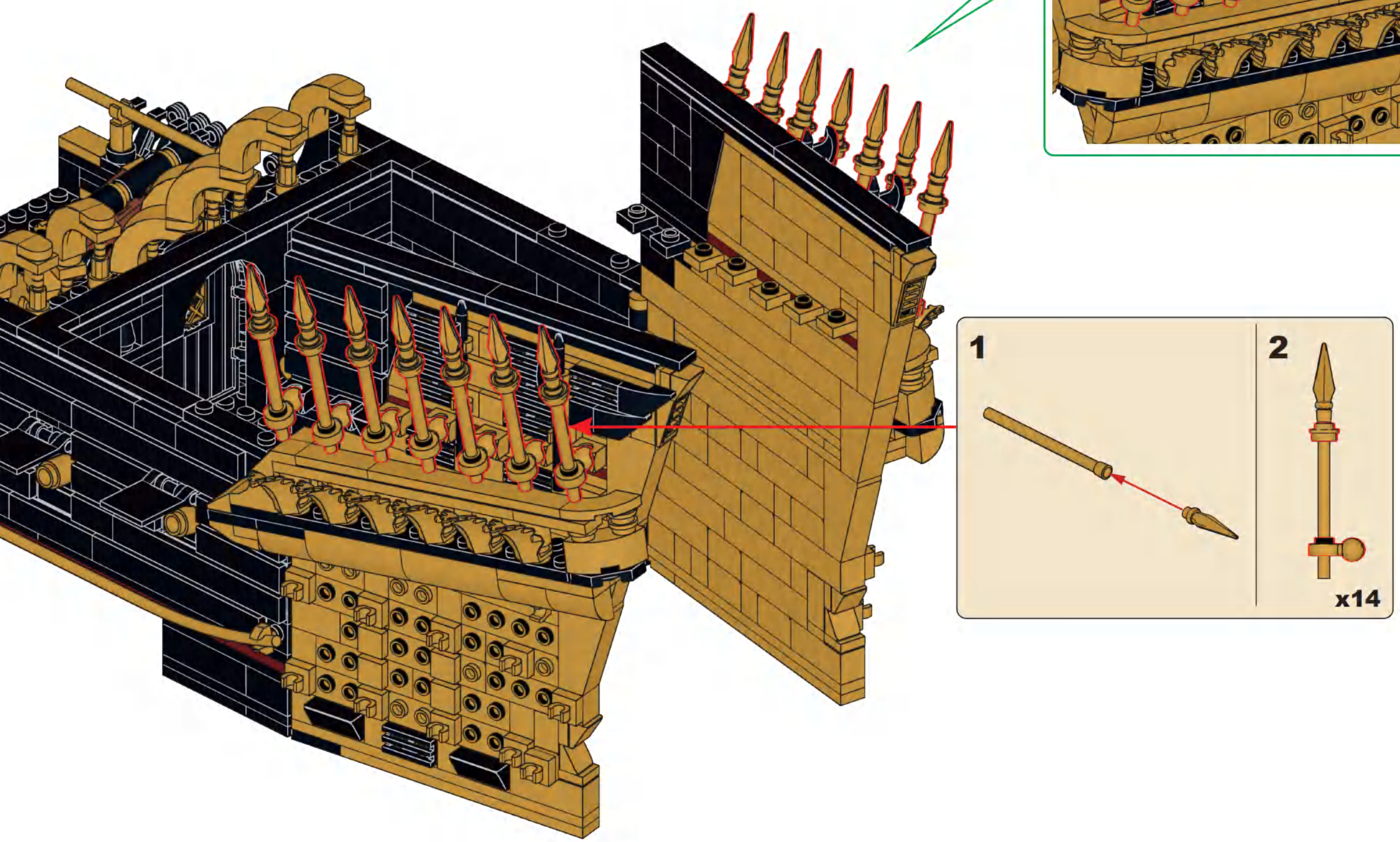

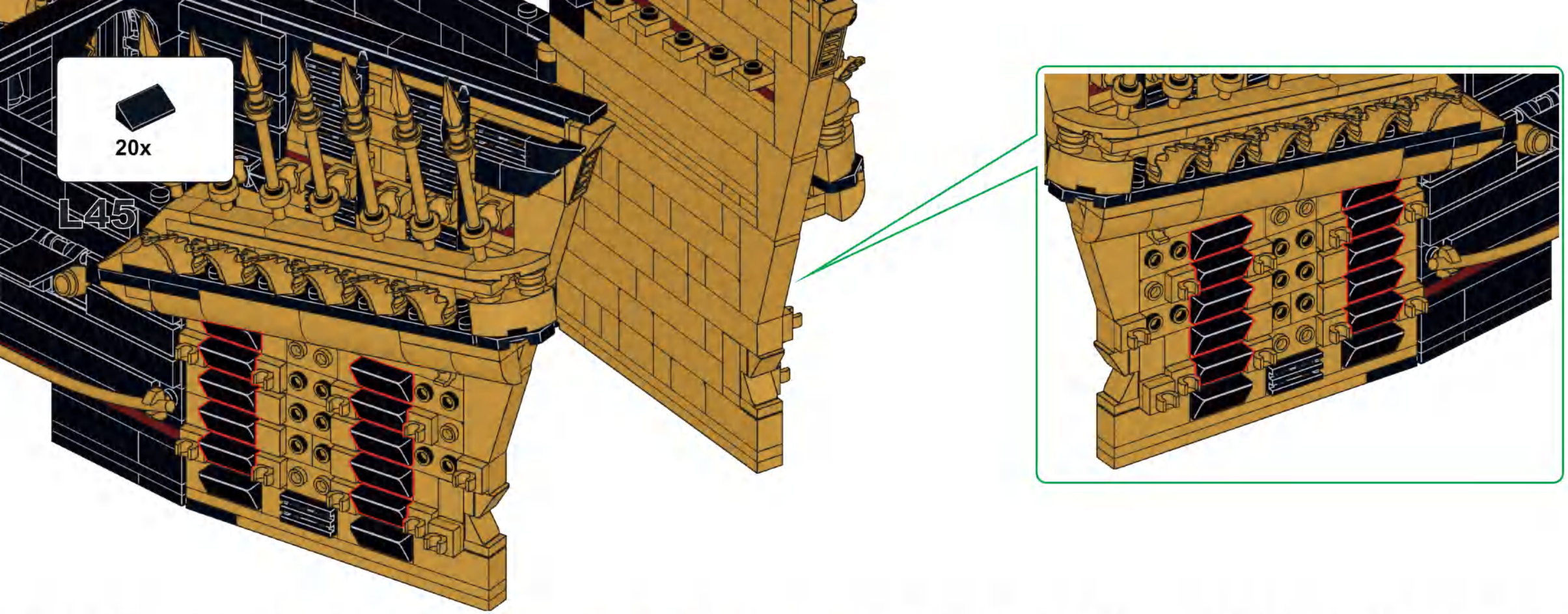
20x
L45

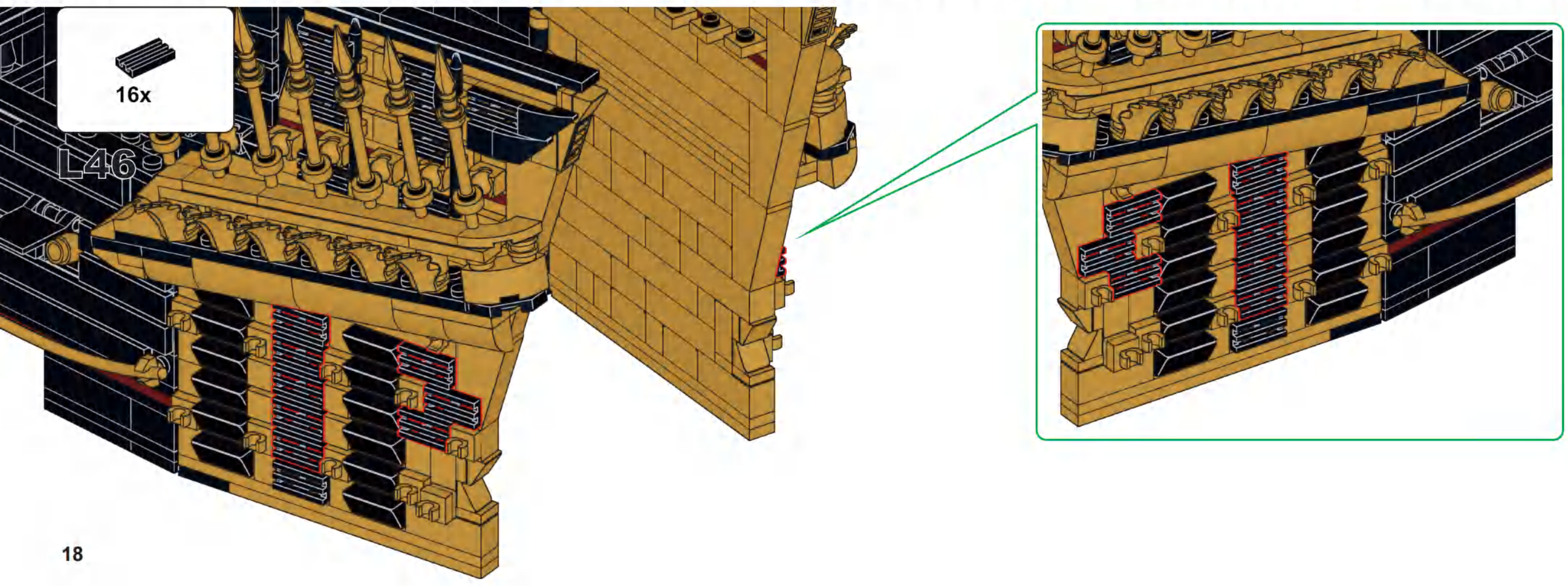
16x
L46

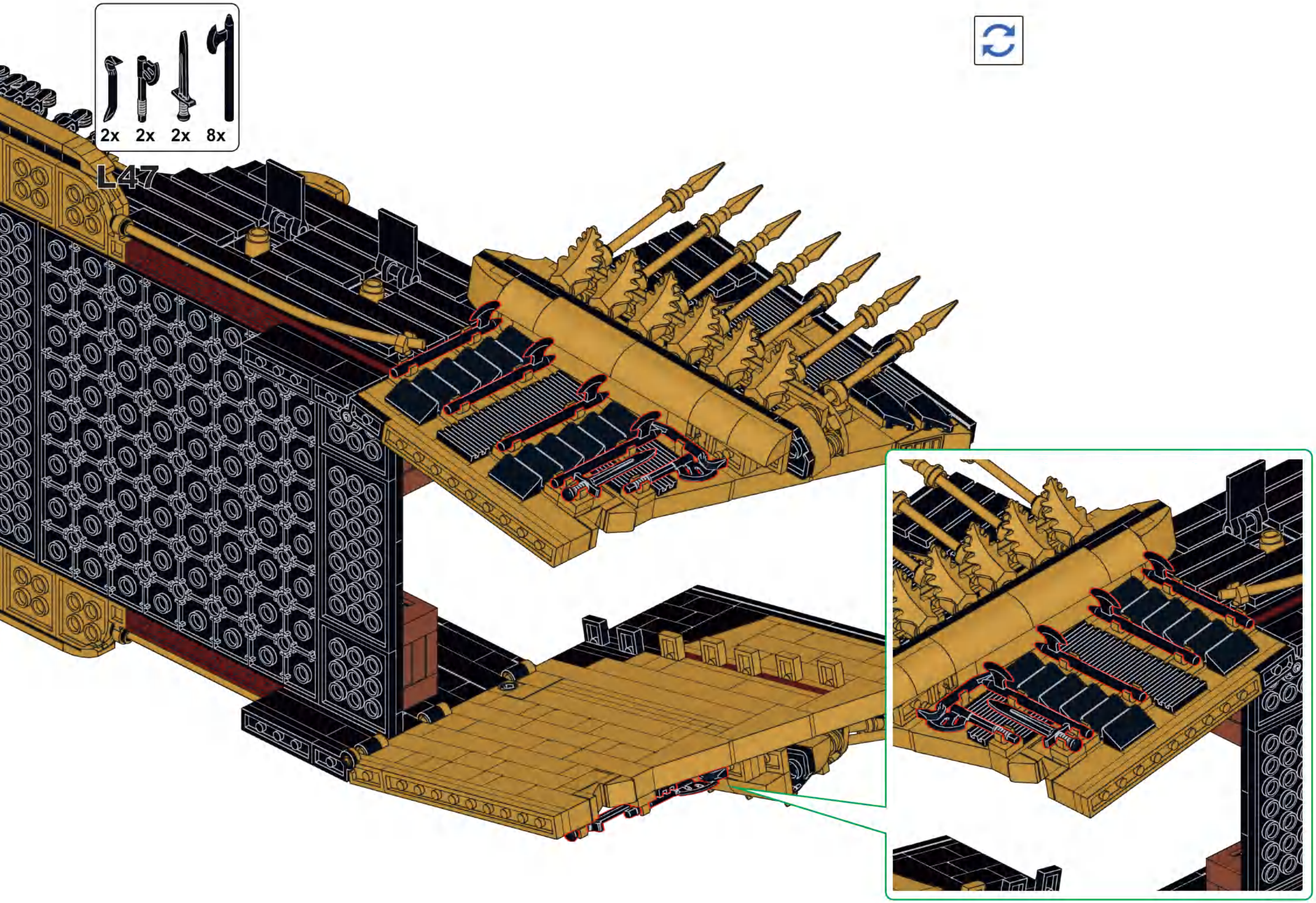
2x 2x 2x 8x
L47

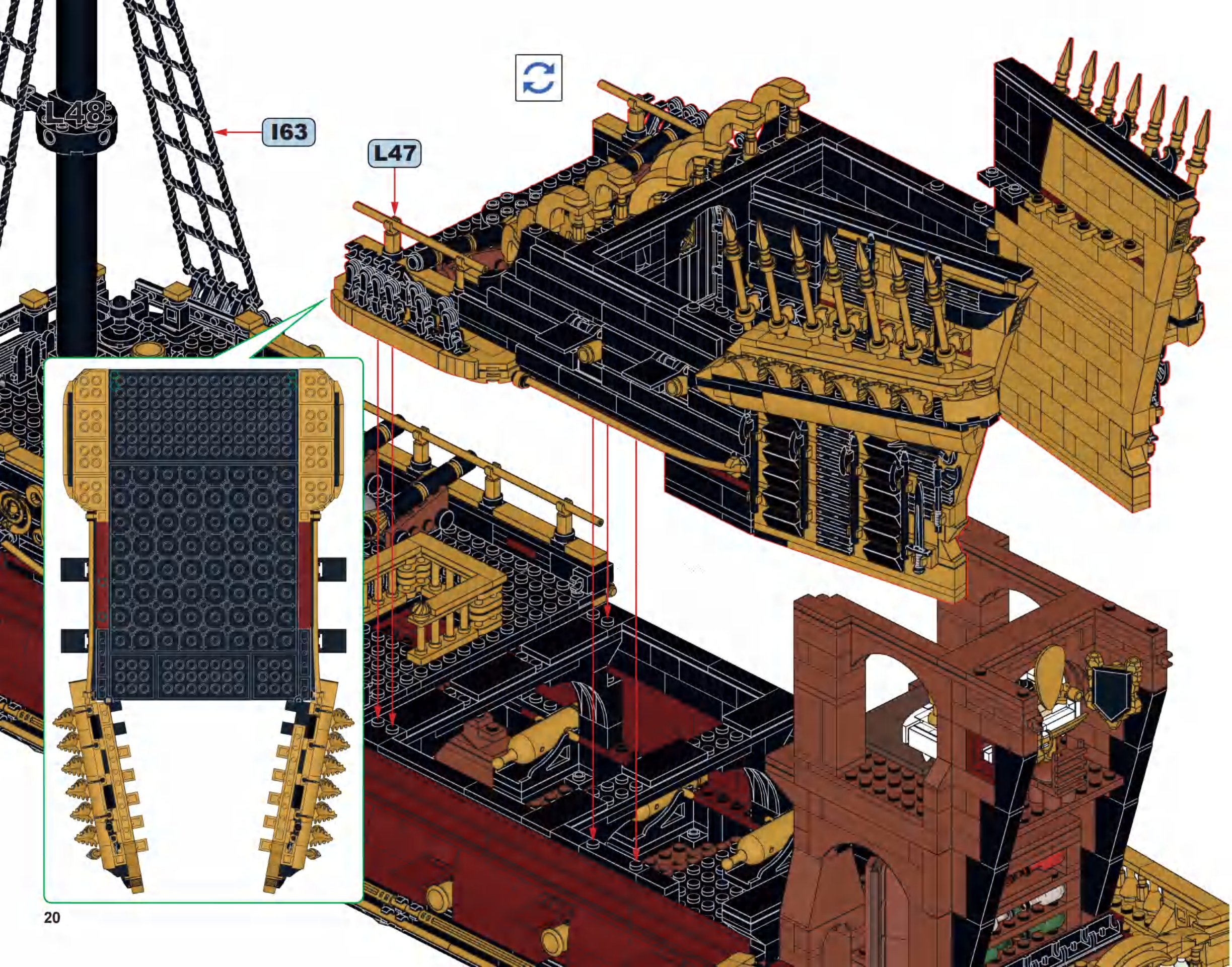
L48
I63
L47

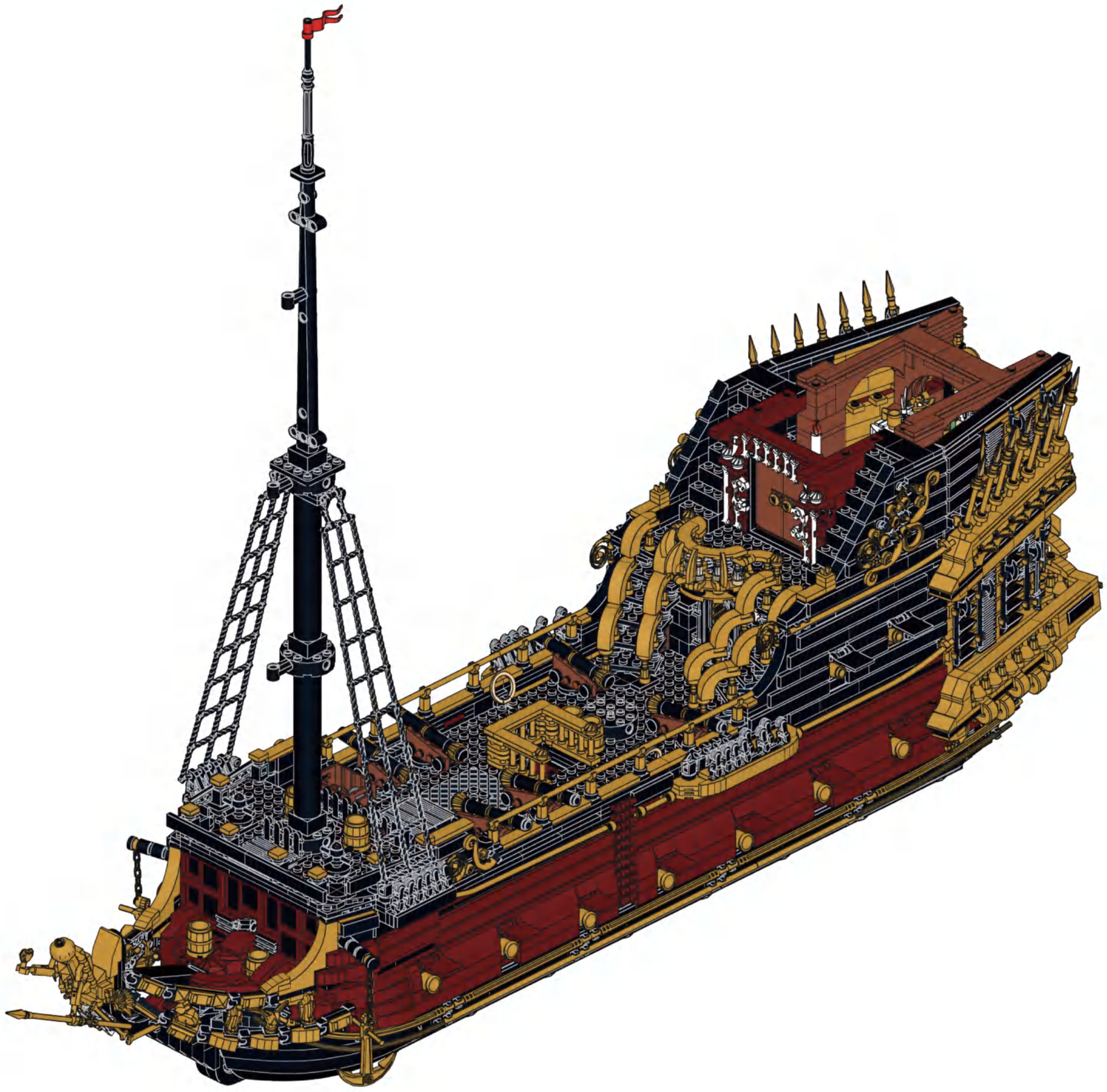

M

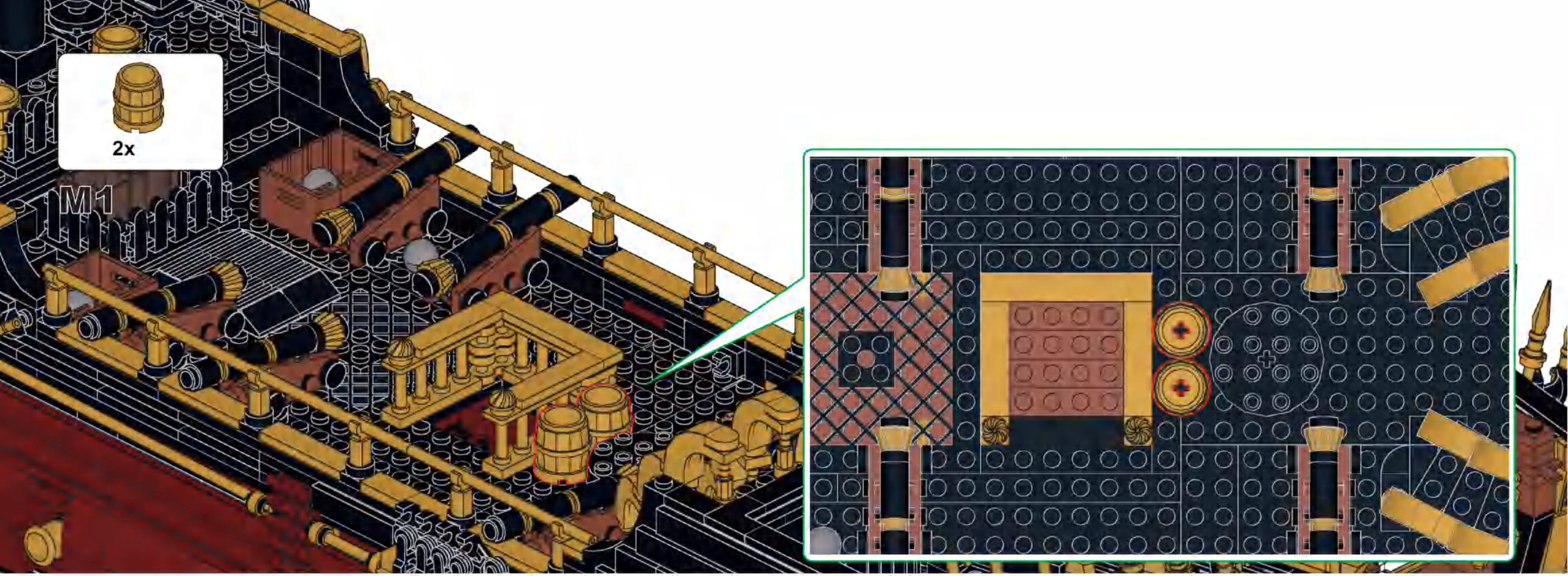
2x
M1

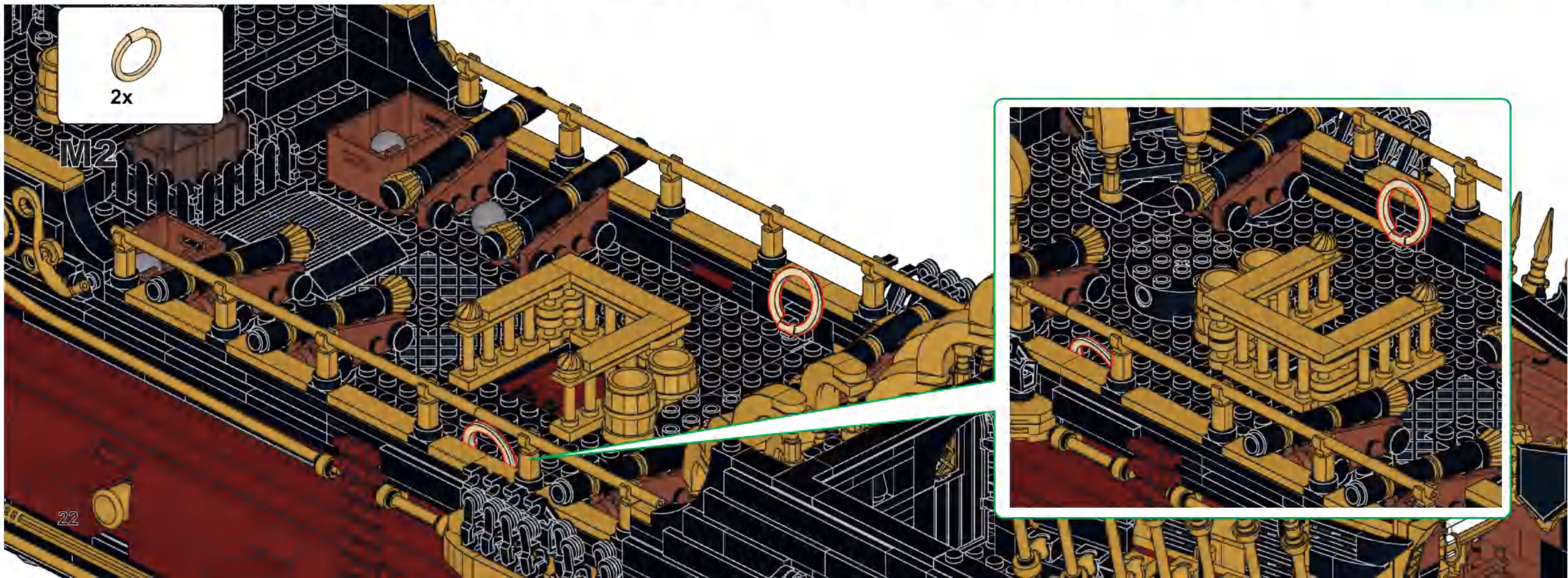
2x
M2

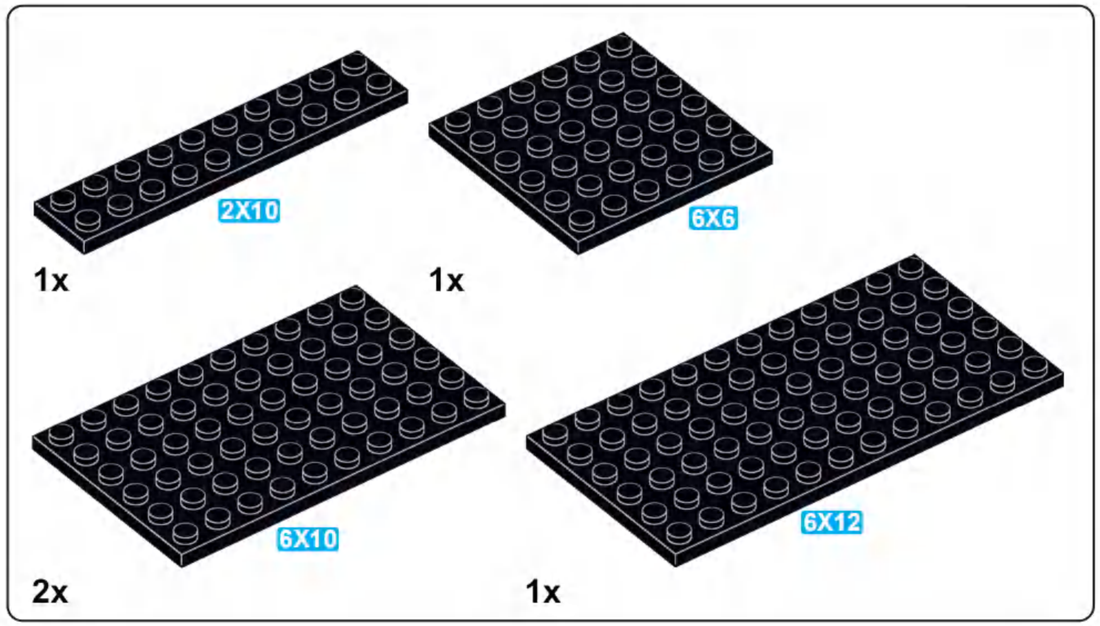
2X10
1x
6X6
1x
6X10
2x
6X12
1x

M3

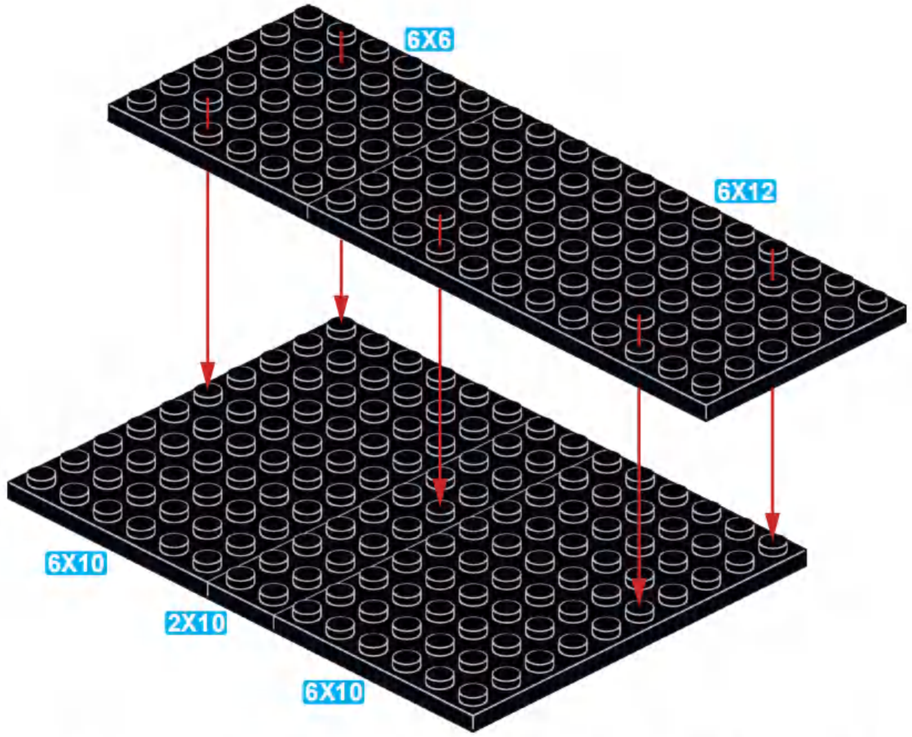
6X6
6X12
6X10
2X10
6X10

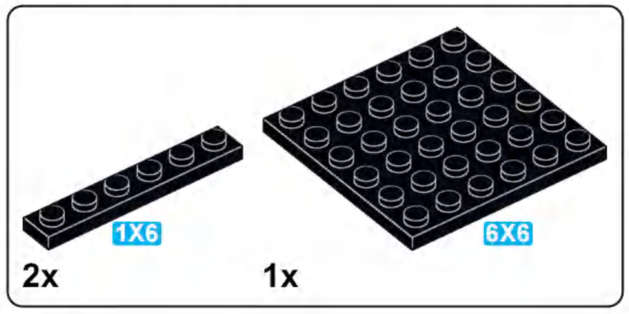
1X6
2x
6X6
1x

M4

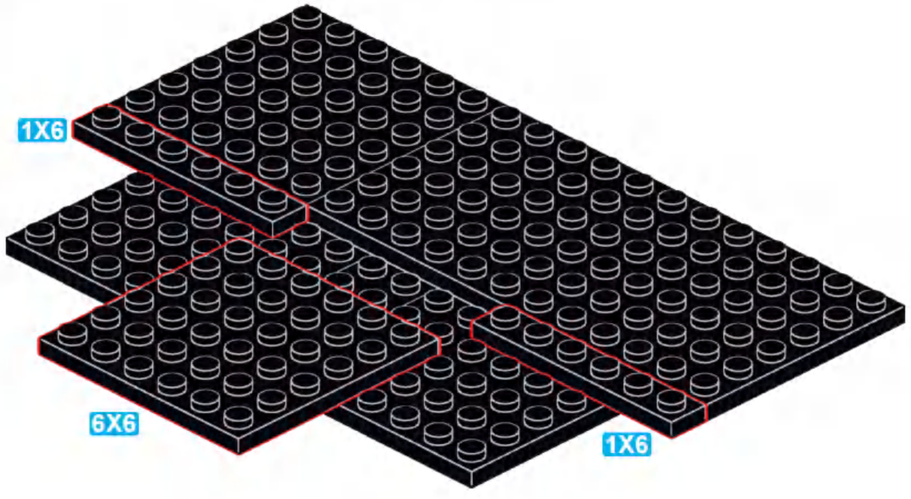
1X6
6X6
1X6

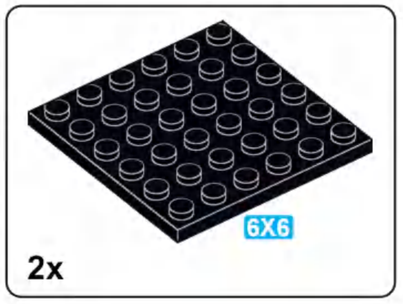
6X6
2x

M5

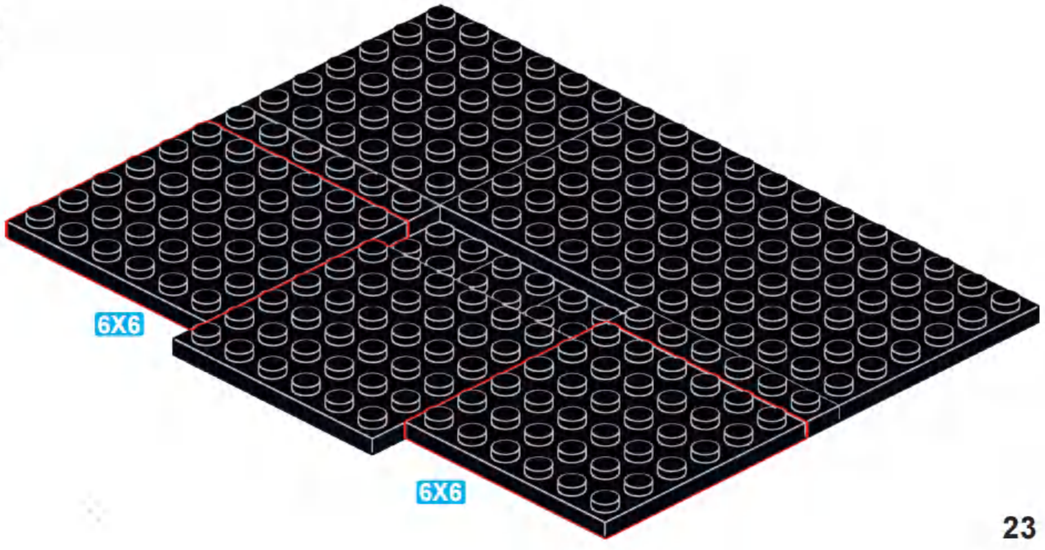
6X6
6X6

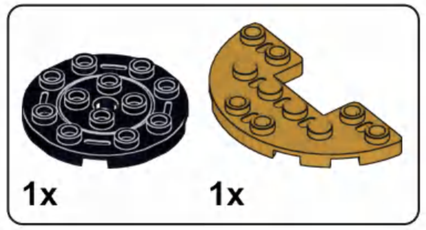

M6

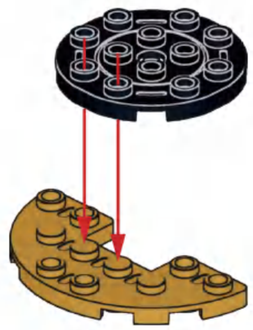

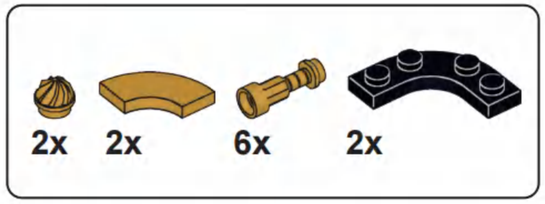

M7

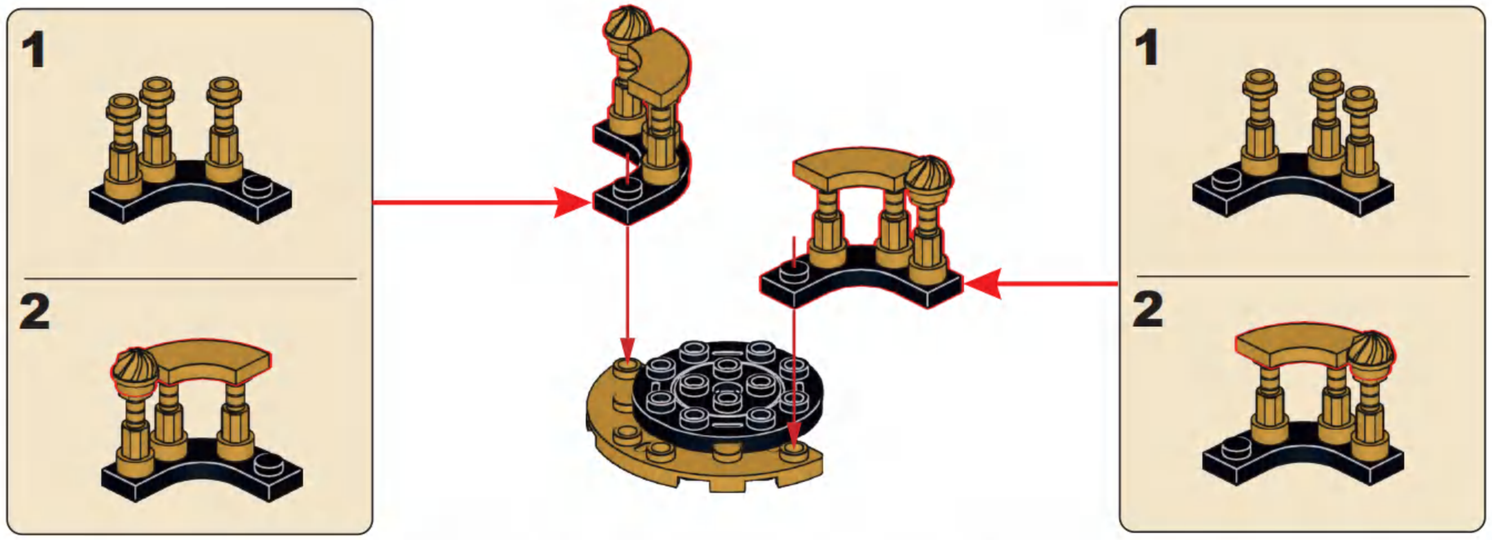

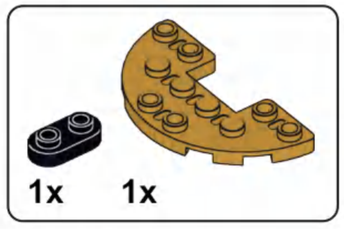

M8

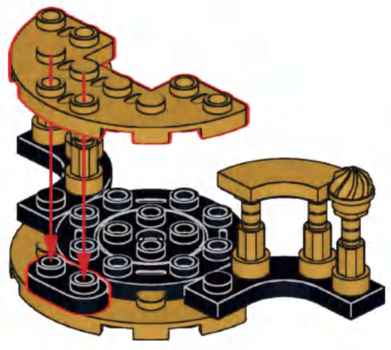

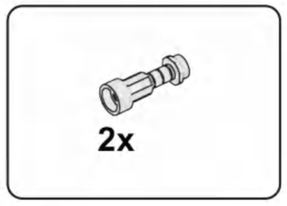

M9

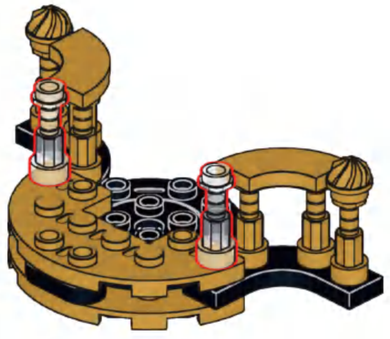

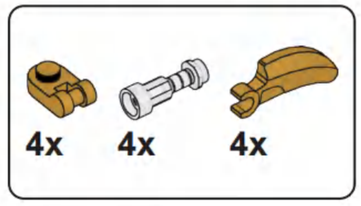

M10

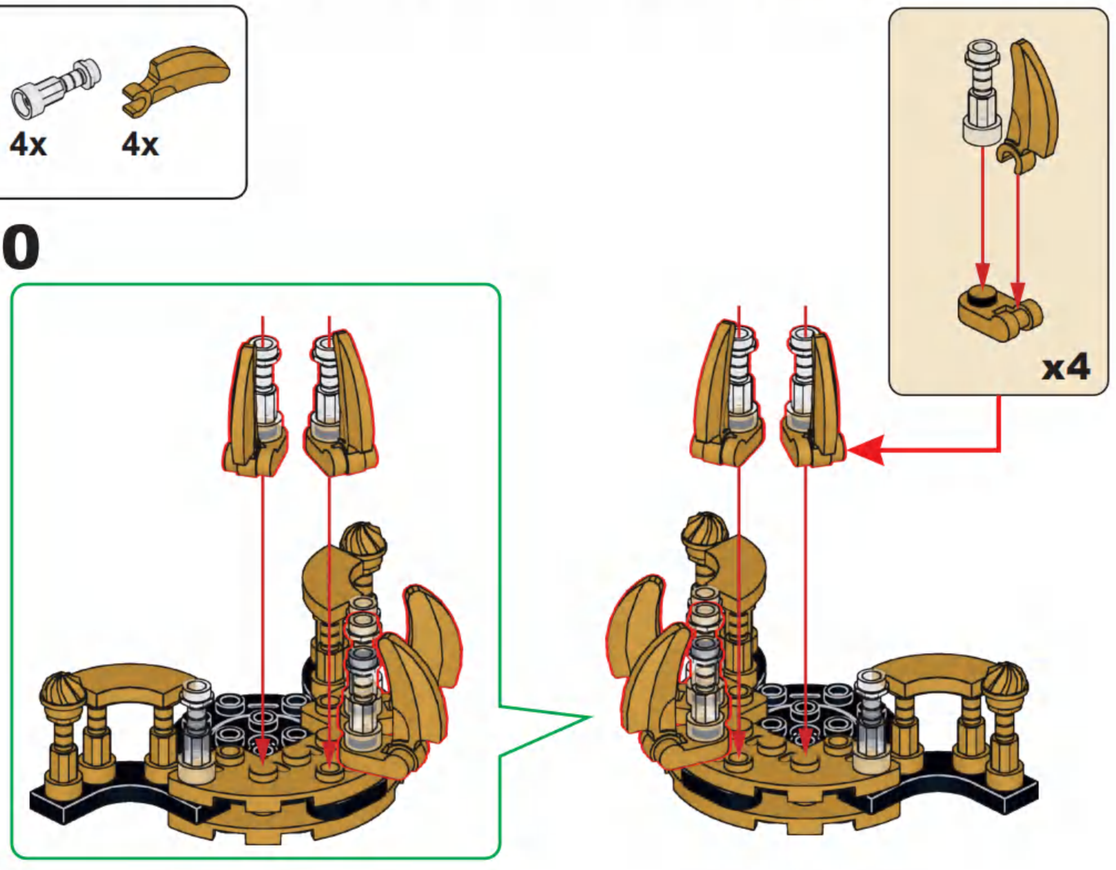

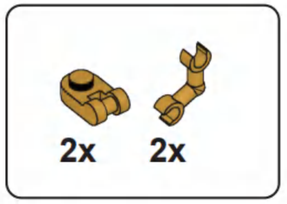

M11

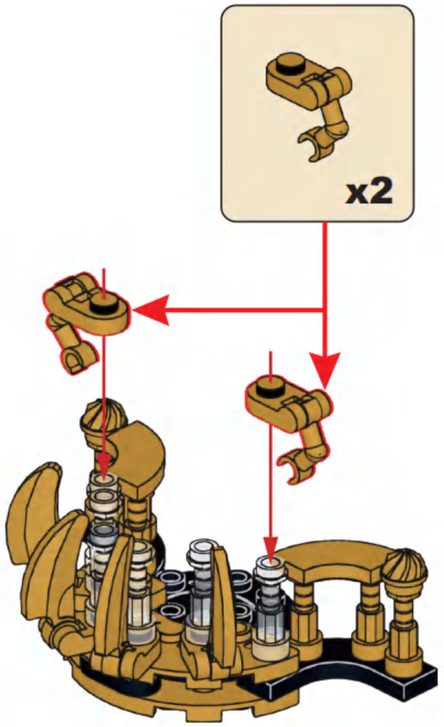

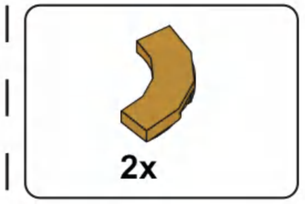

M12

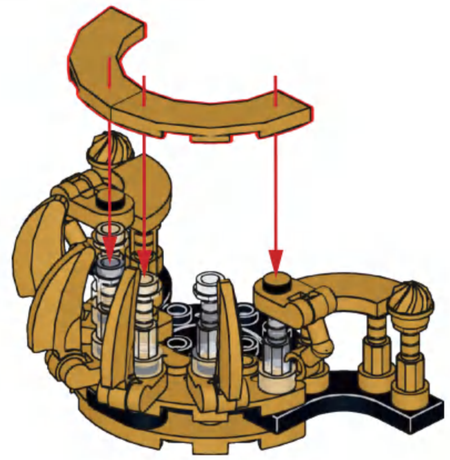

M13

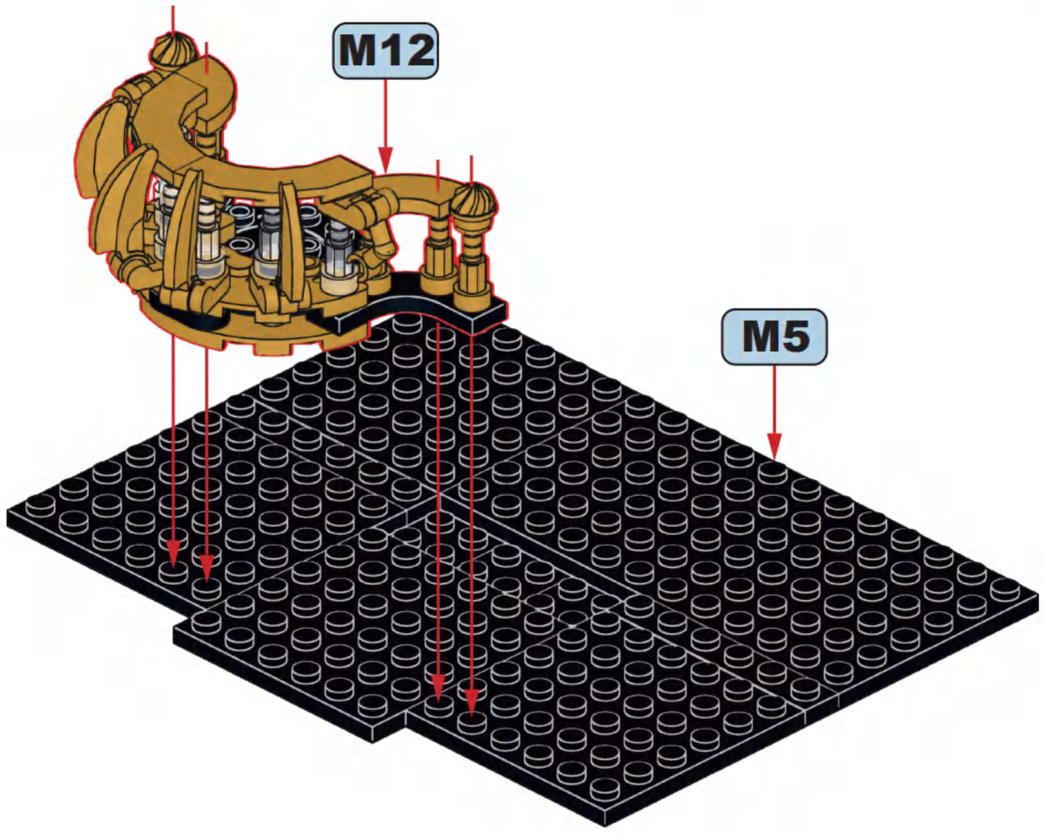

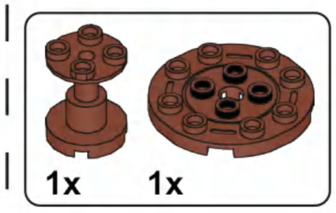

M14

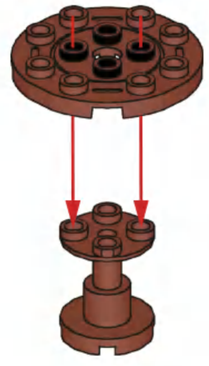

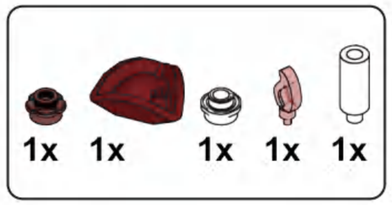

M15

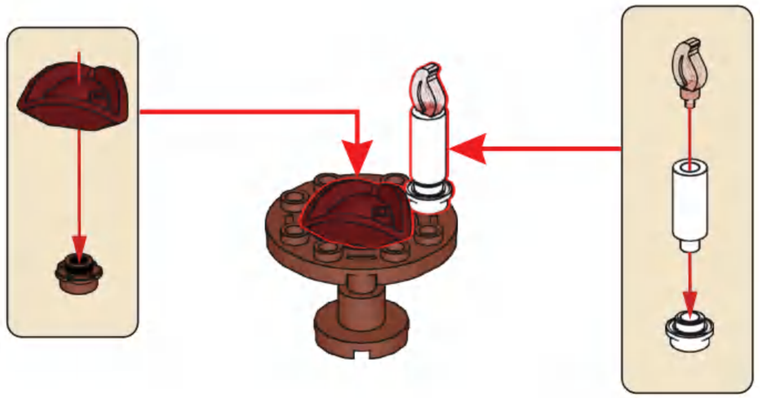

M16

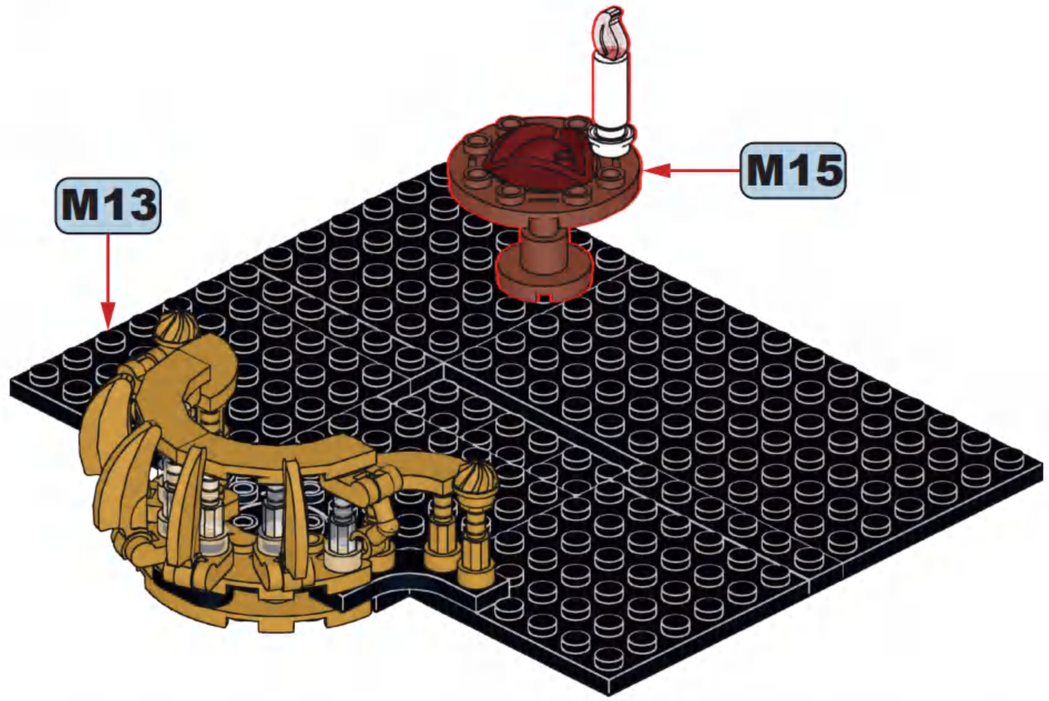

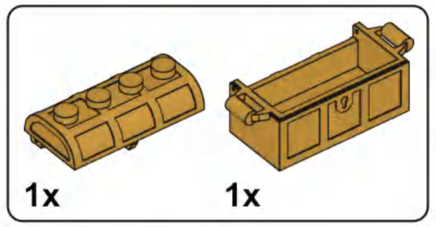

M17

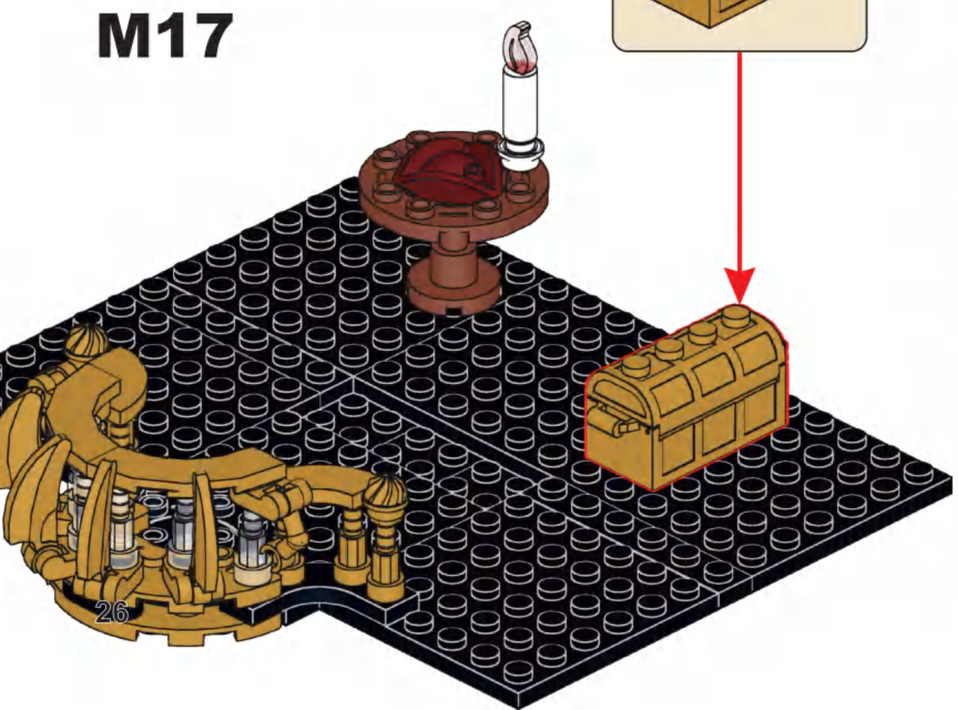

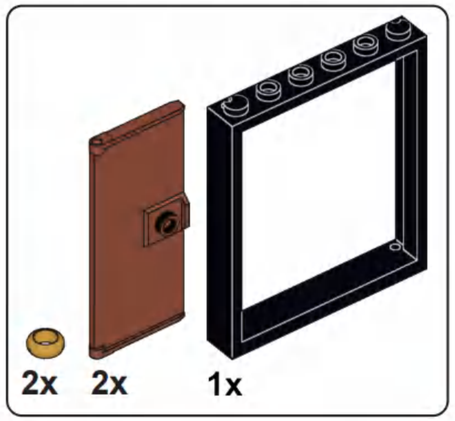

M18

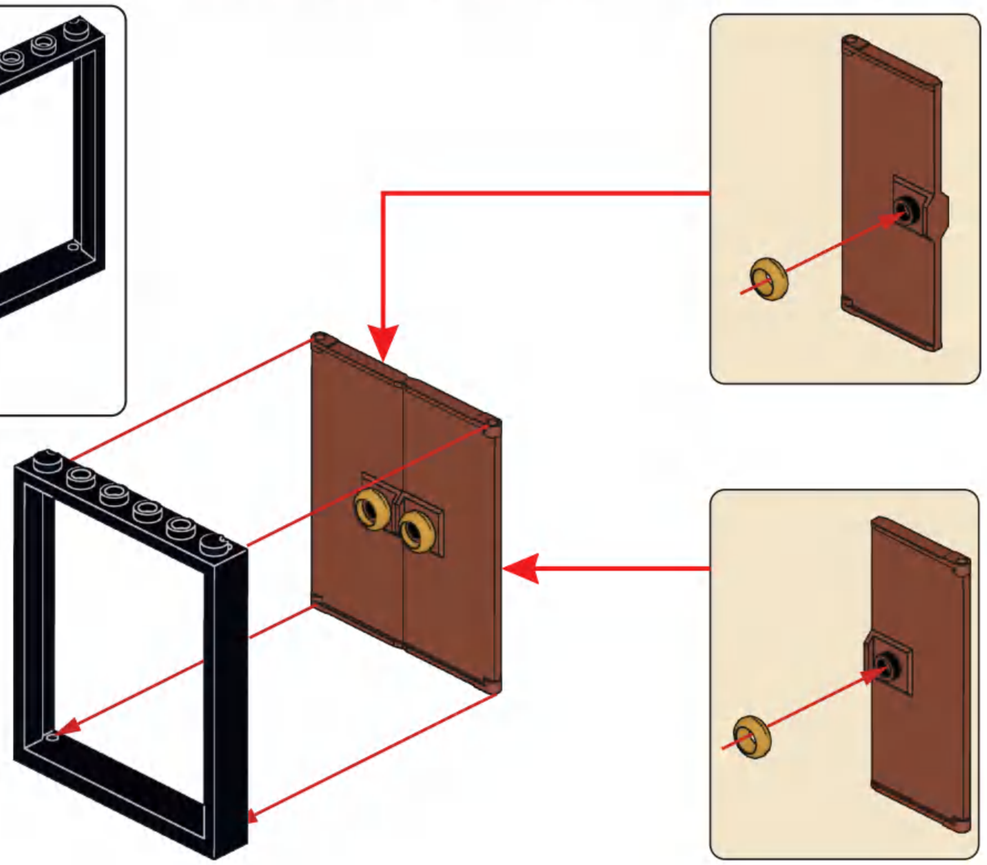

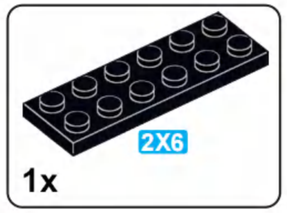

M19

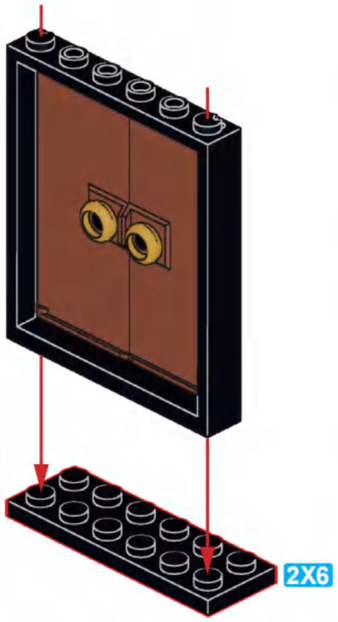

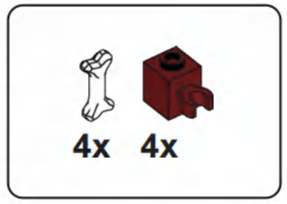

M20

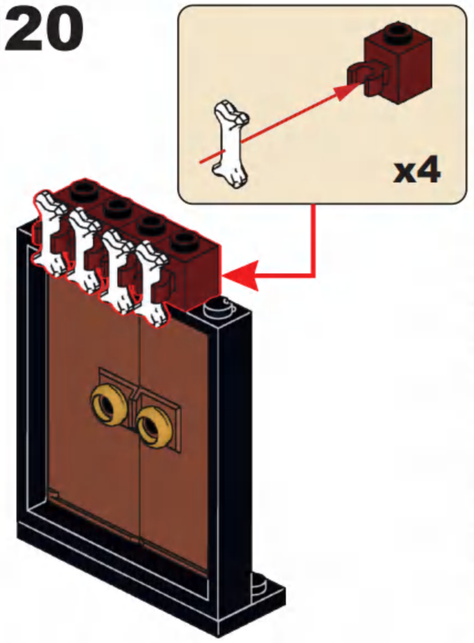

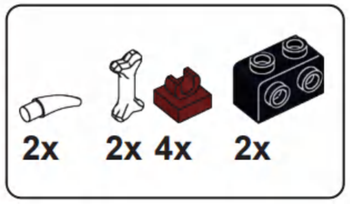

M21

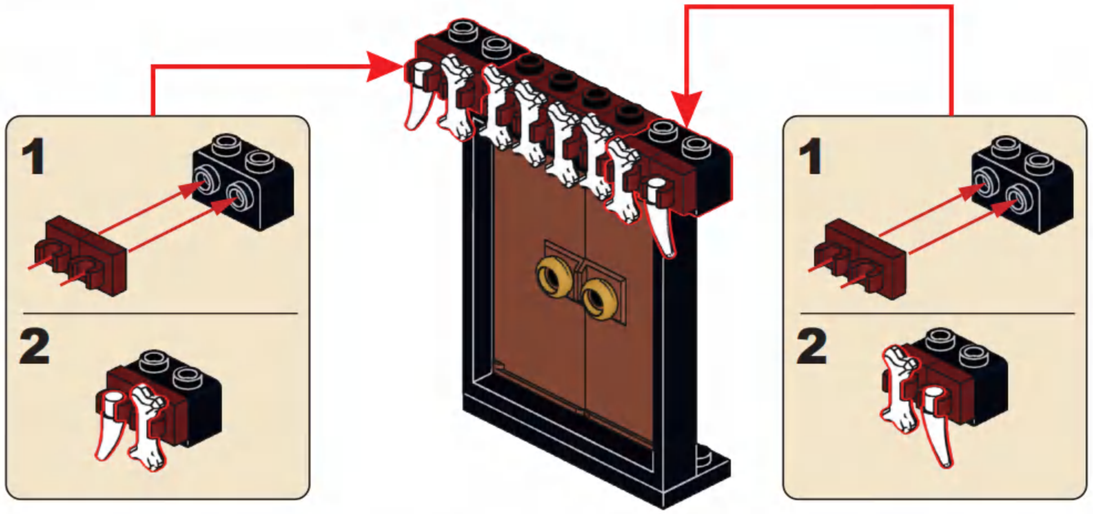

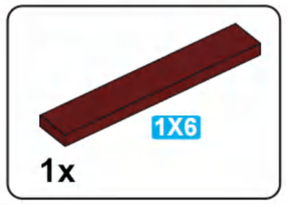

M22

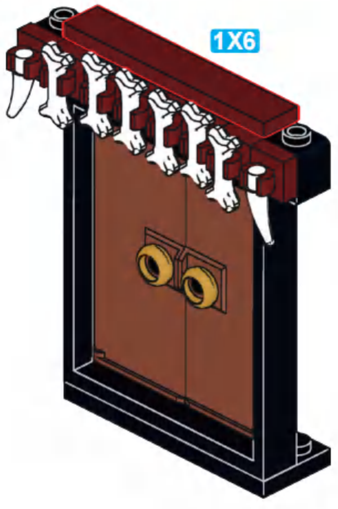

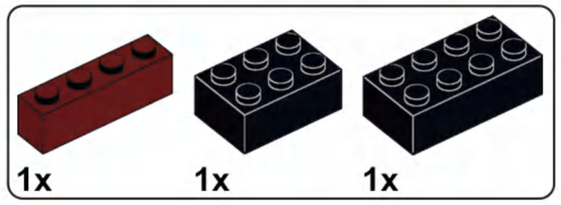

M23

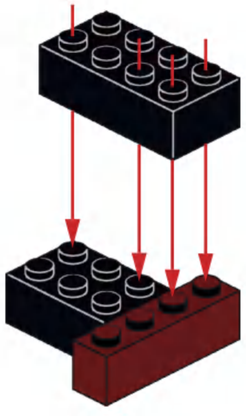

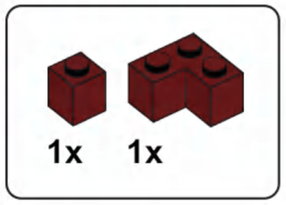

M24

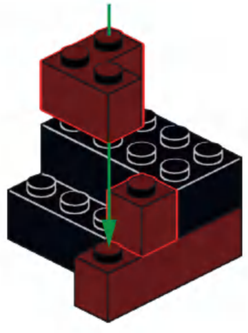

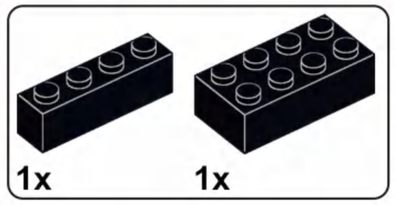

M25

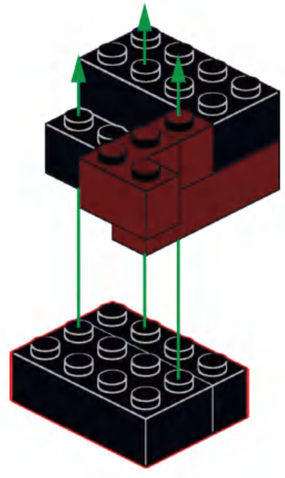

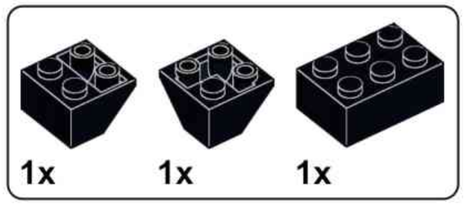

M26

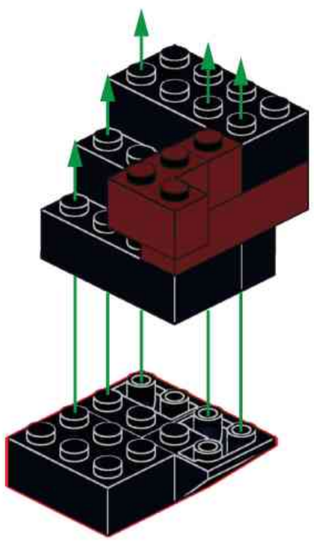

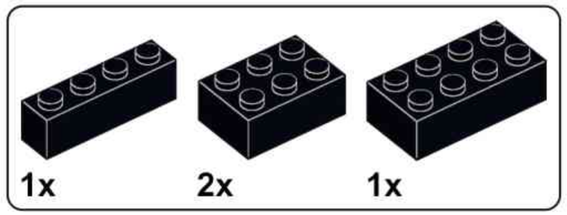

M27

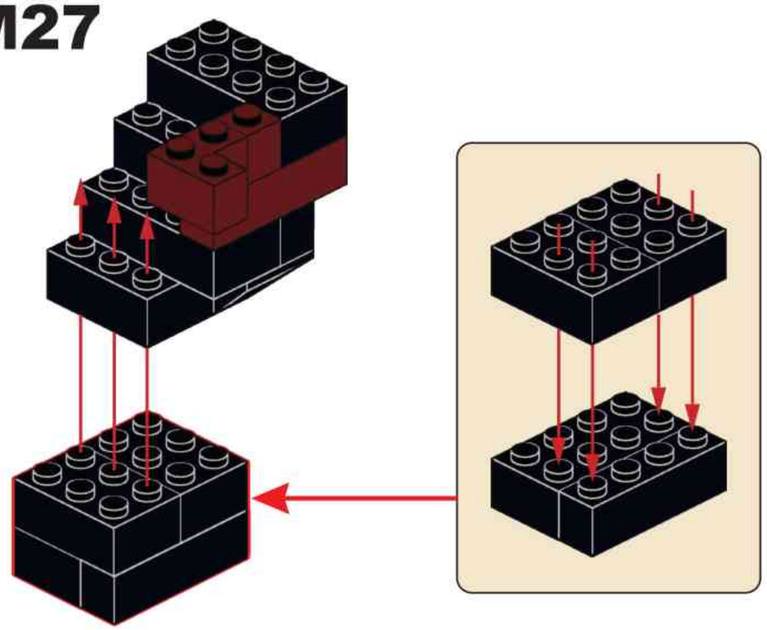

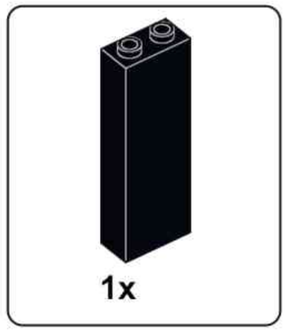

M28

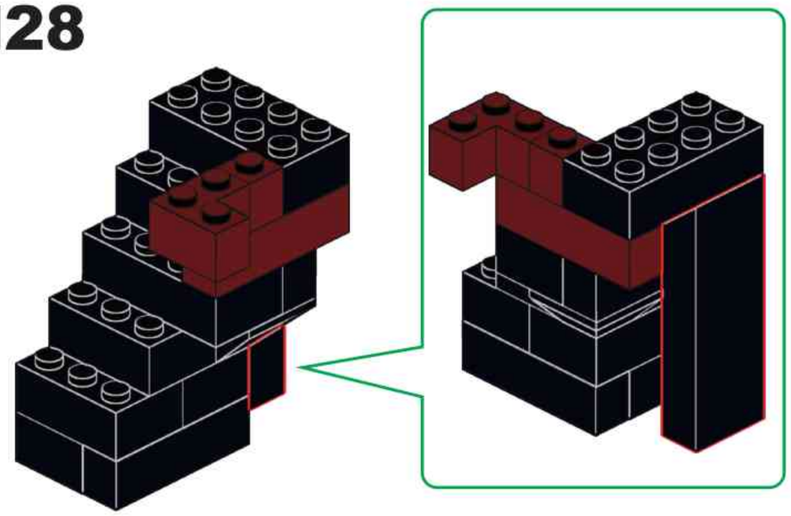

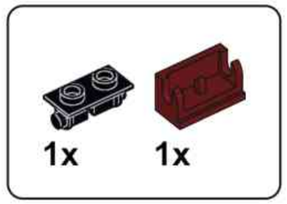

M29

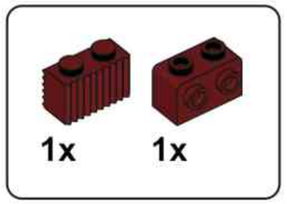

M30

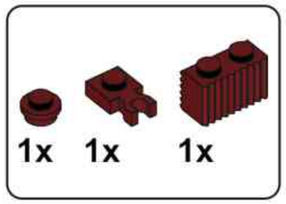

M31

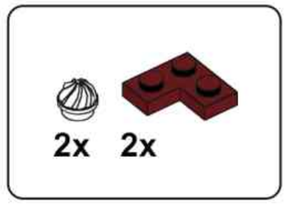

M32

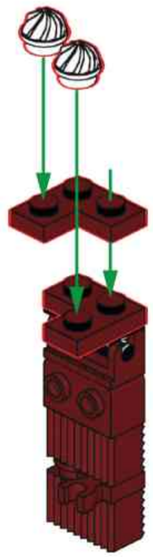

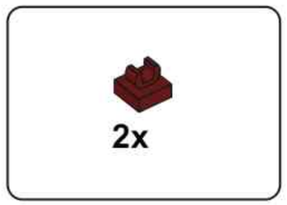

M33

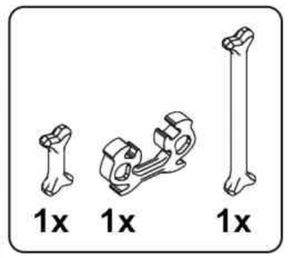

M34

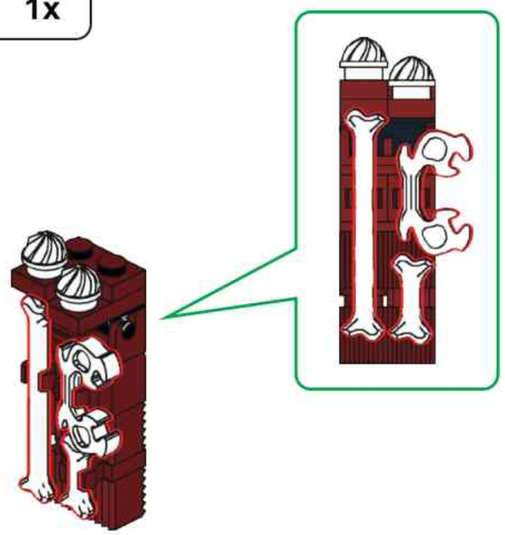

M35

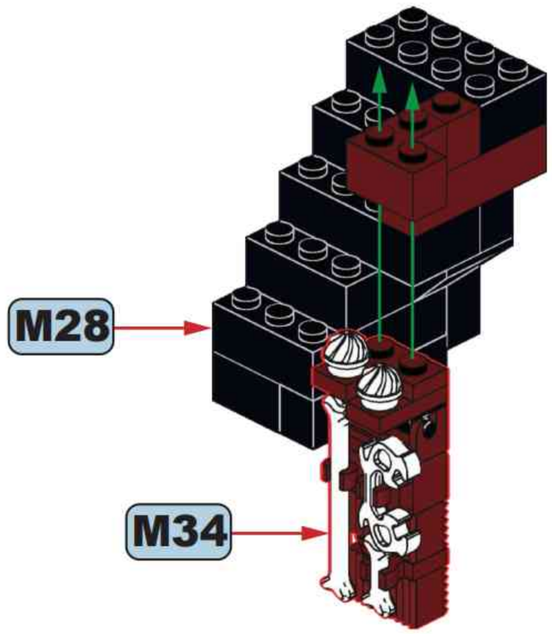

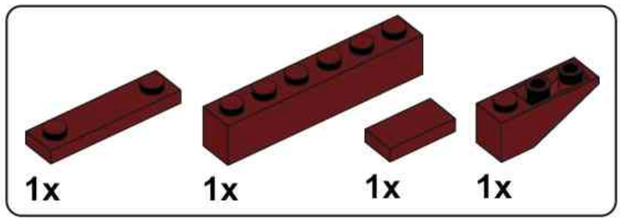

M36

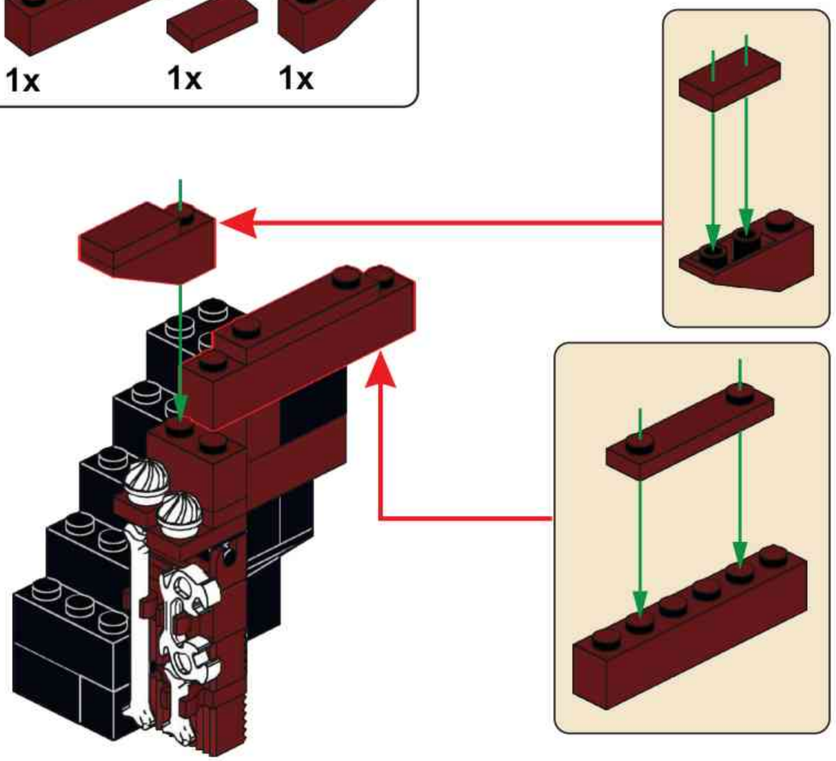

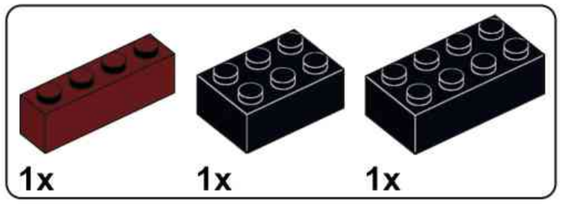

M37

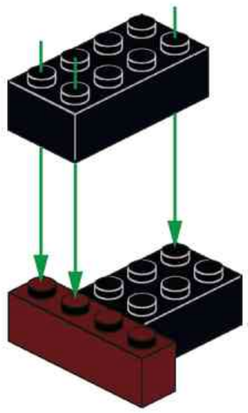

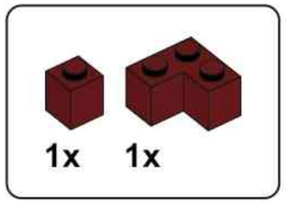

M38

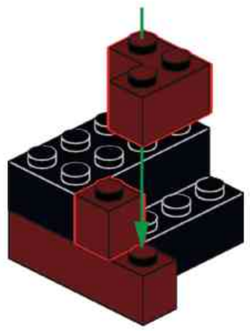

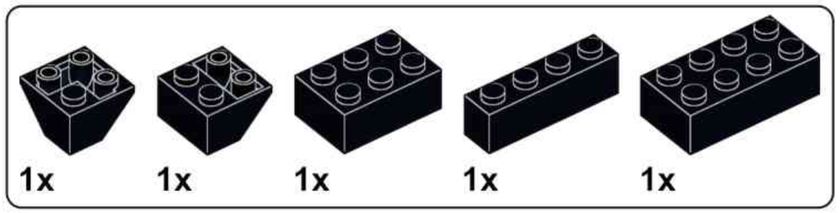

M39

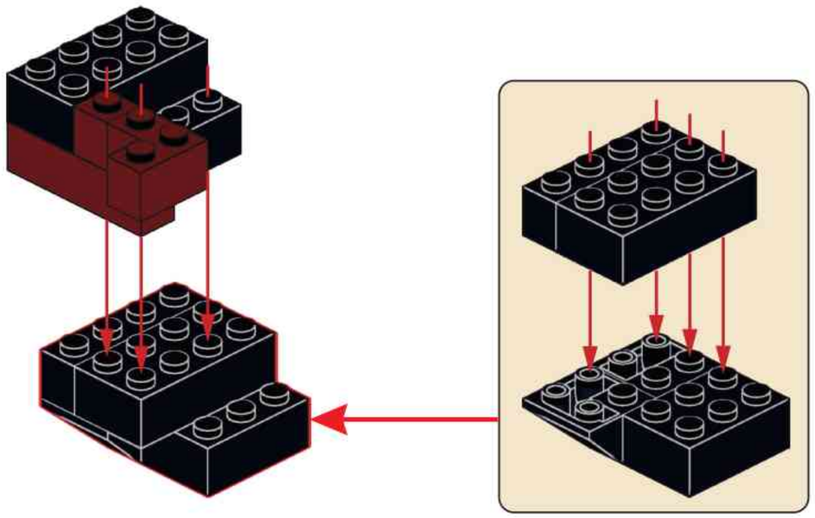

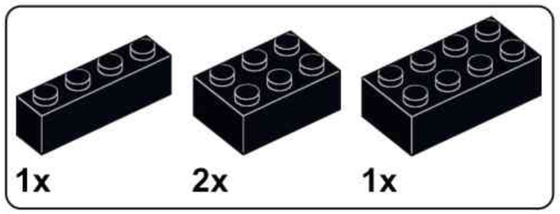

M40

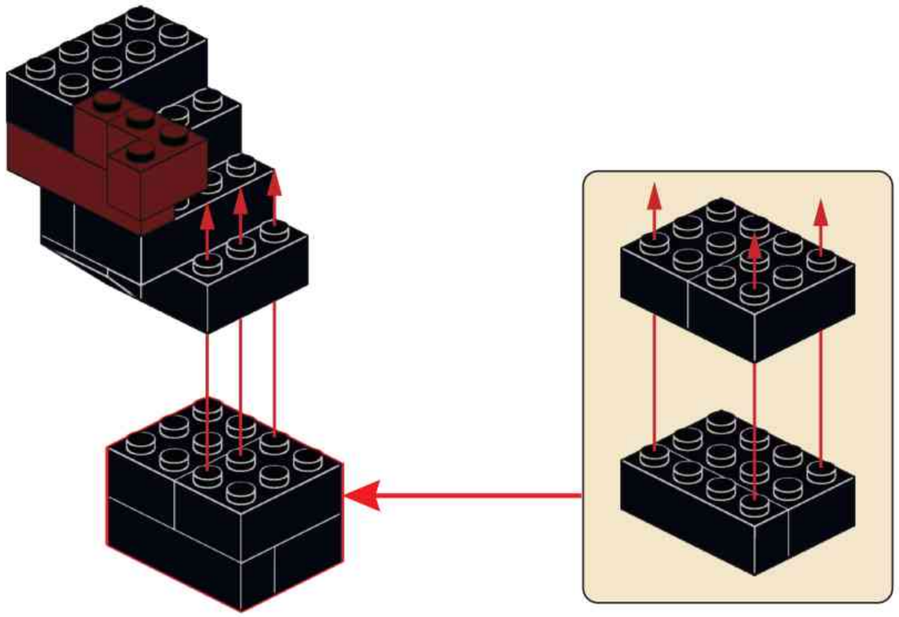

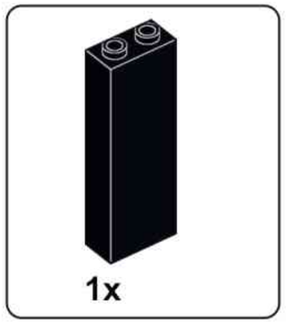

M41

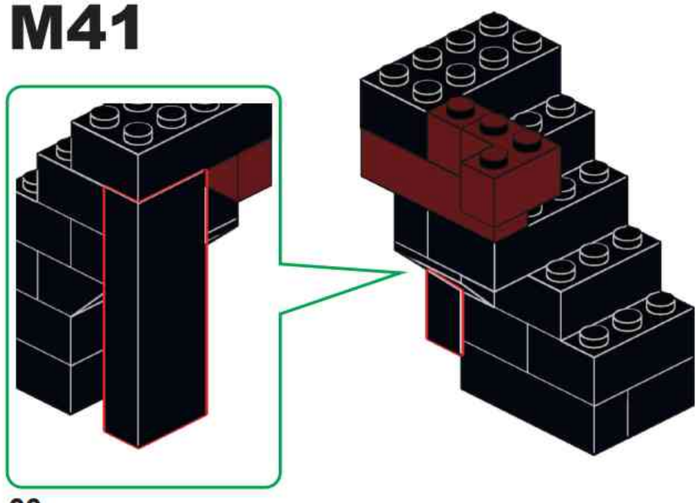

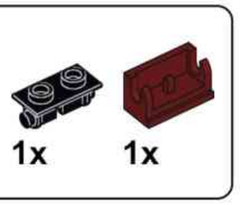

M42

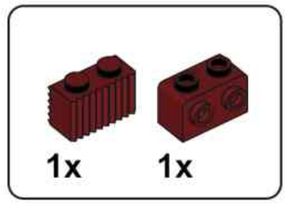

M43

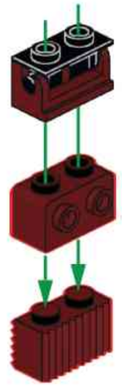

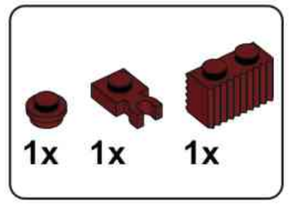

M44

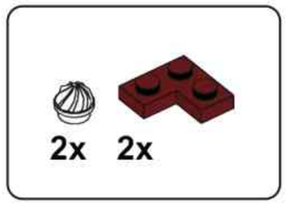

M45

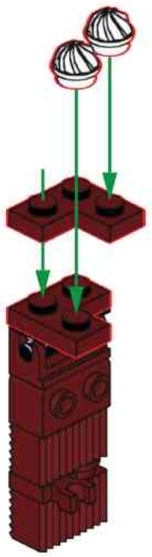

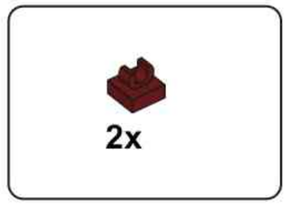

M46

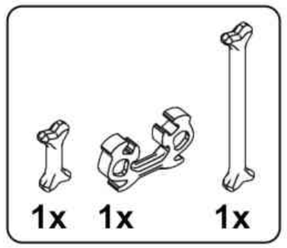

M47

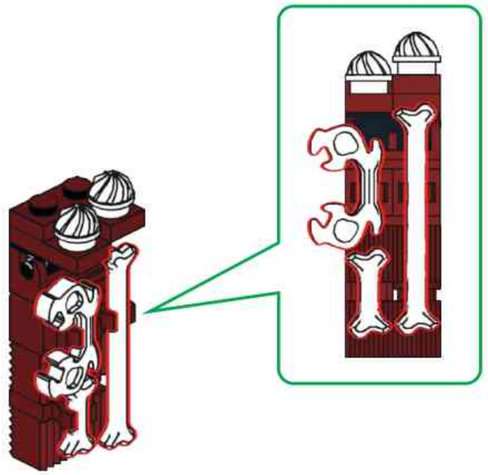

M48

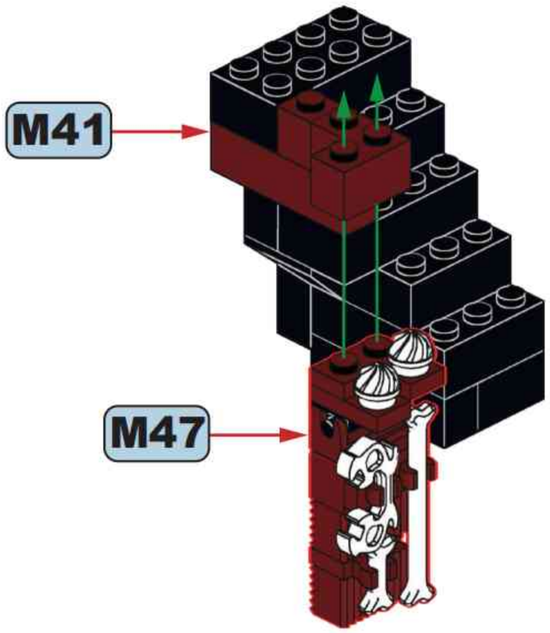

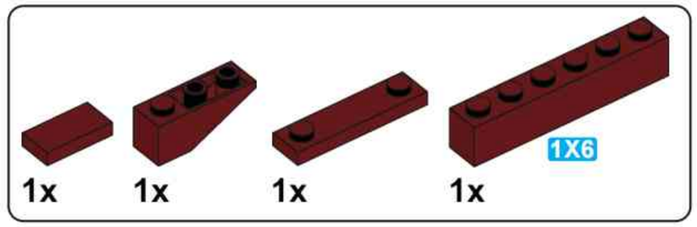

M49

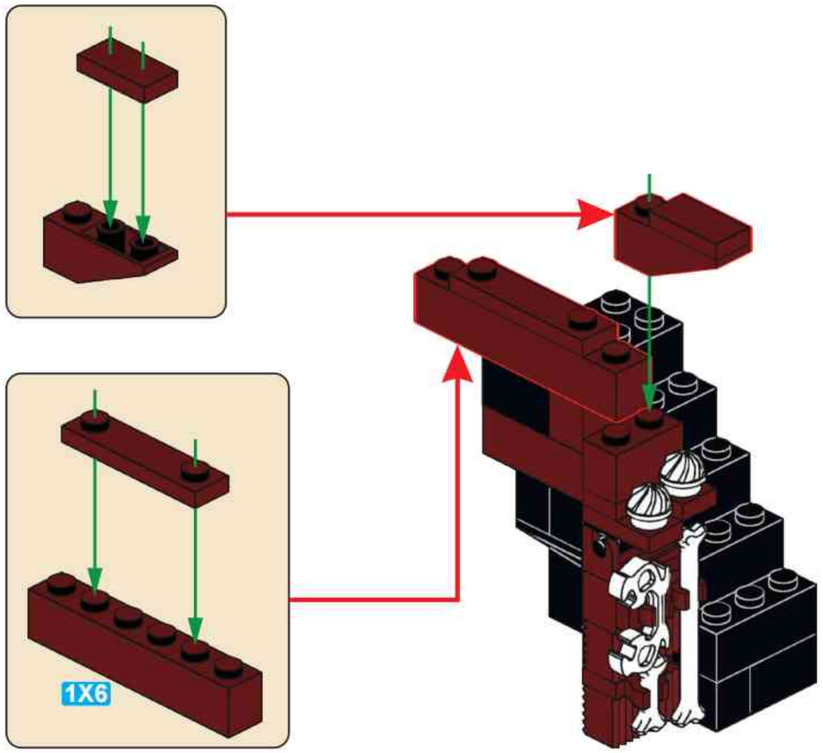

M50

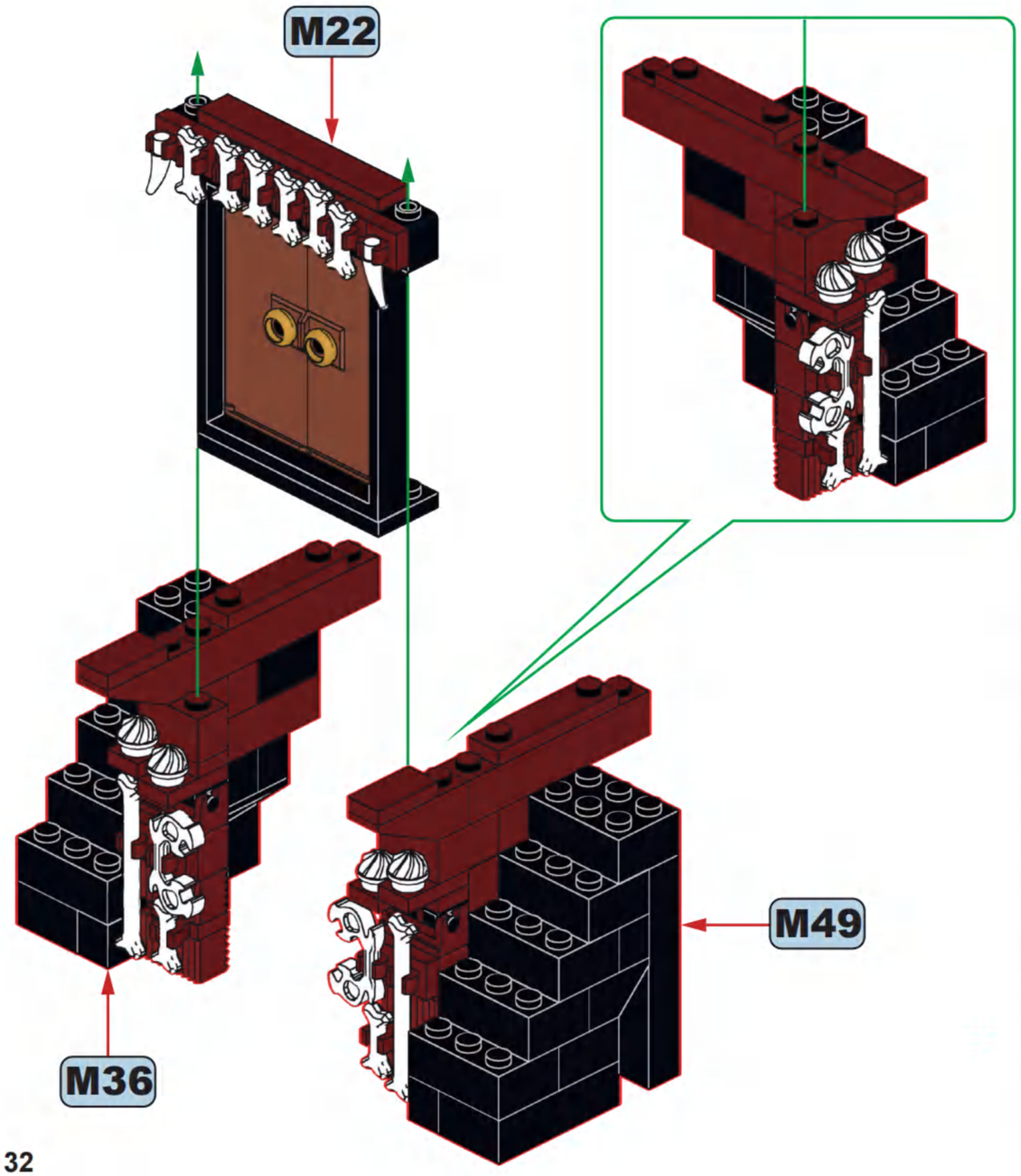

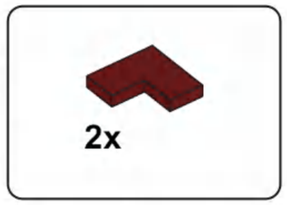

M51

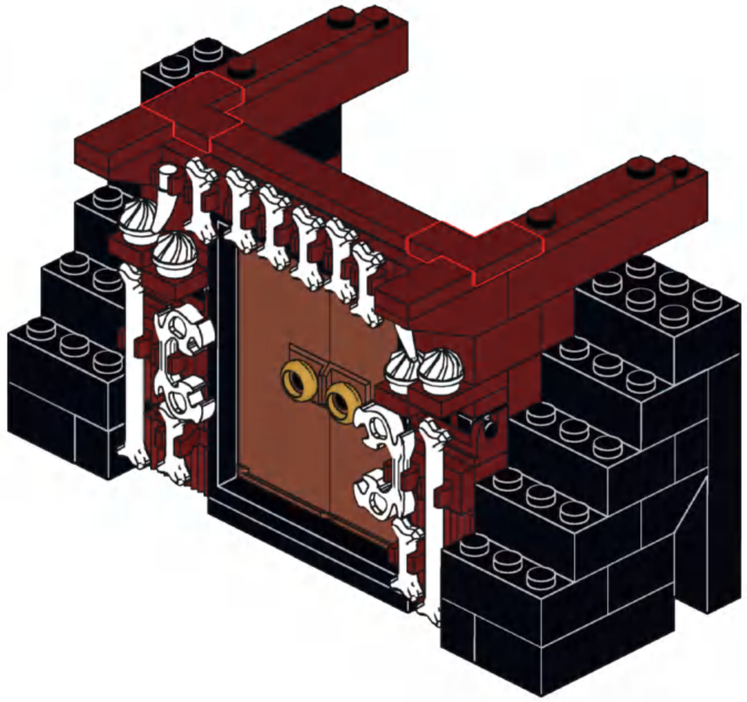

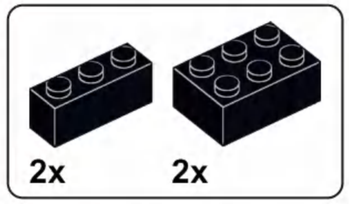

M52

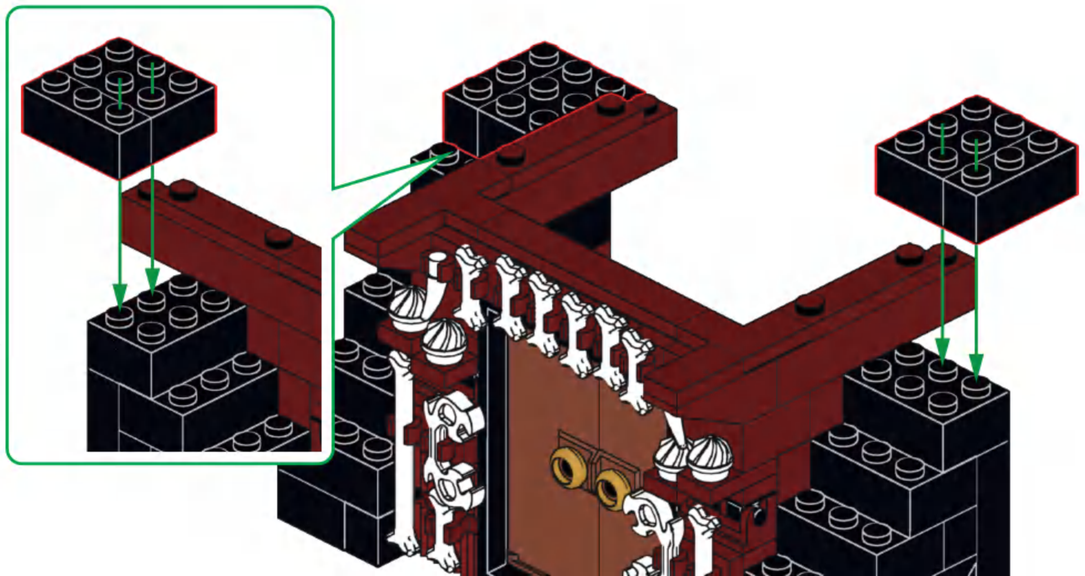

M53

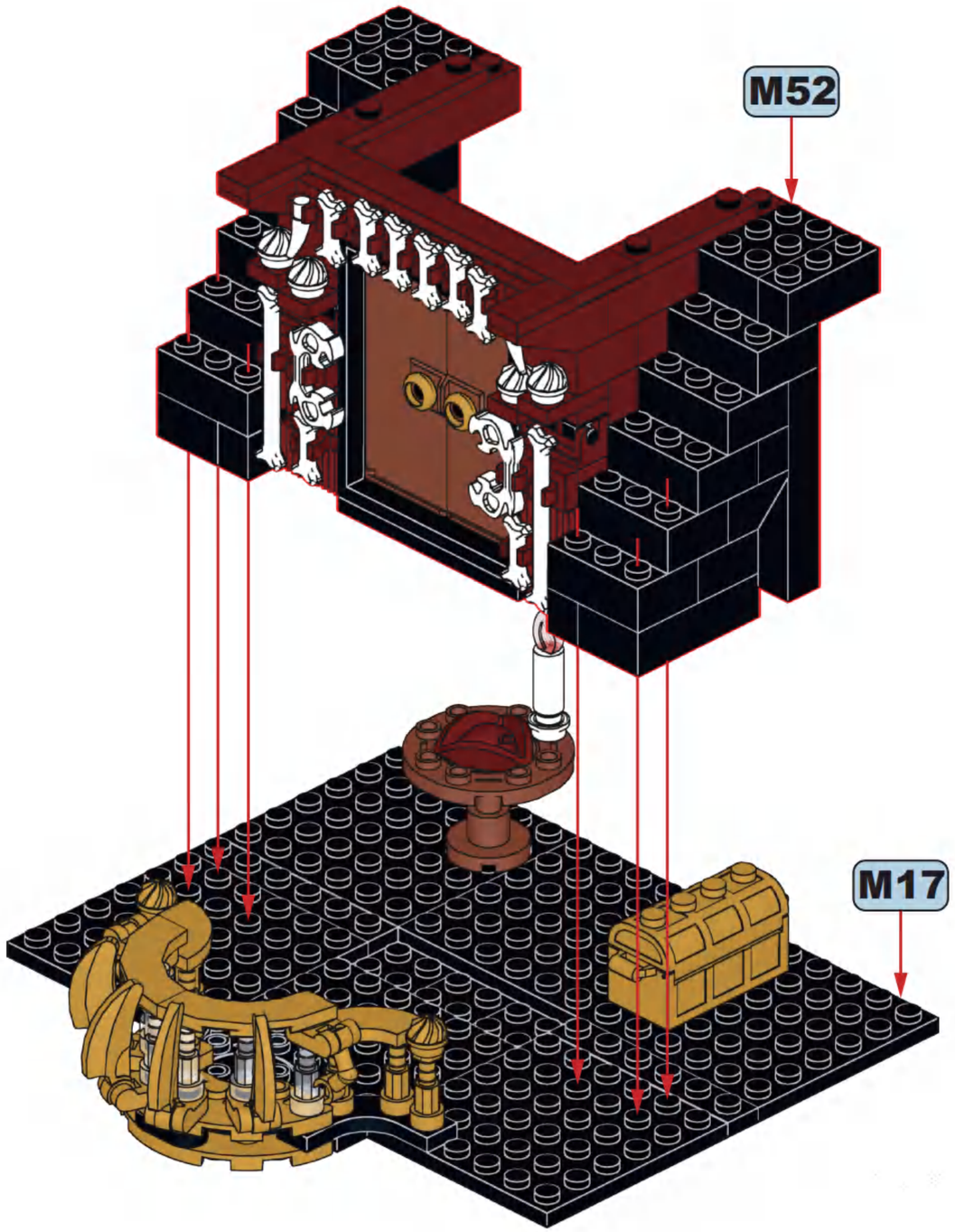

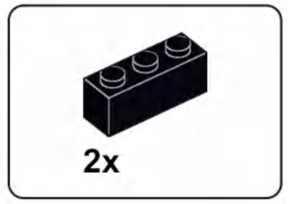

M54

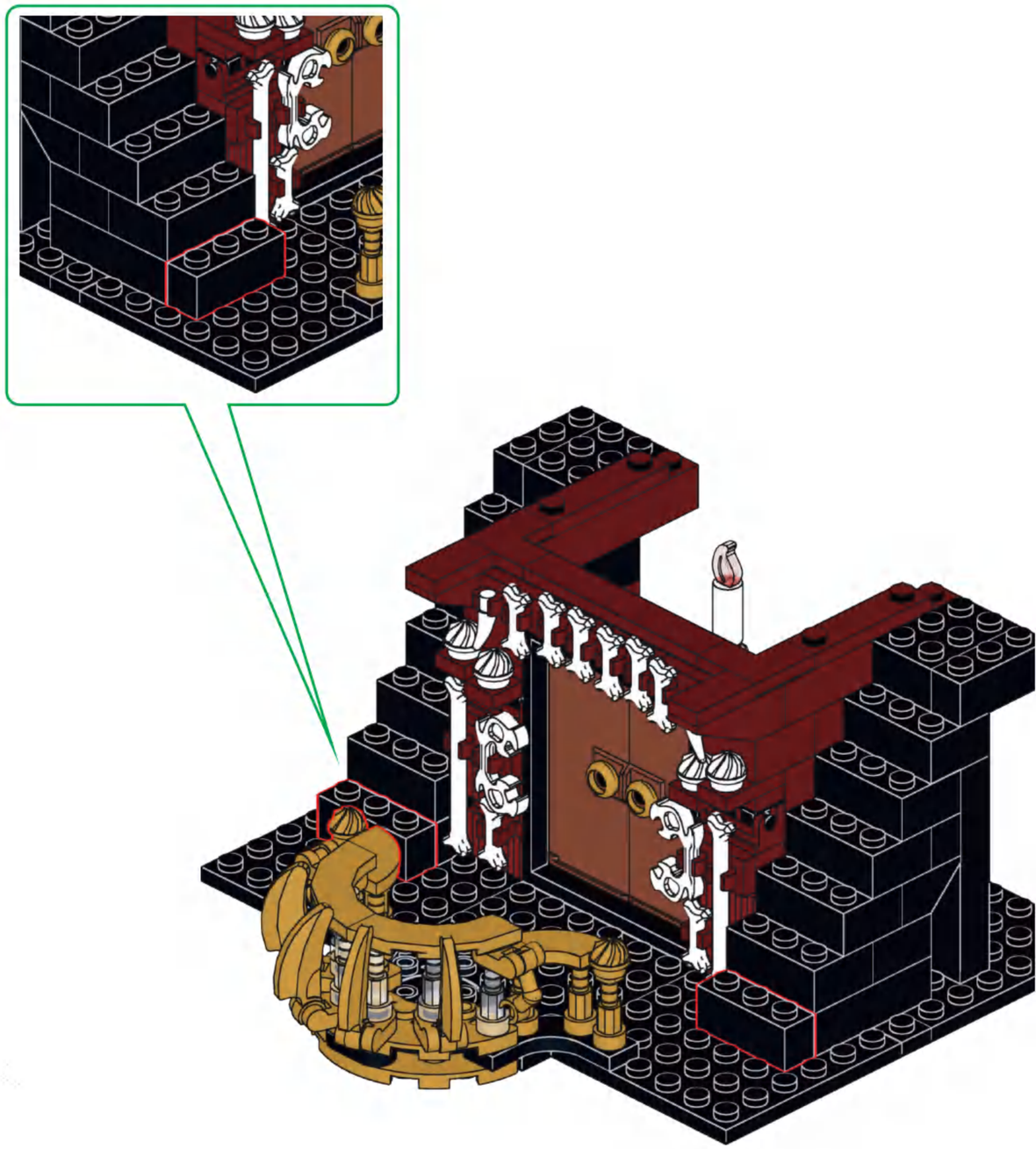

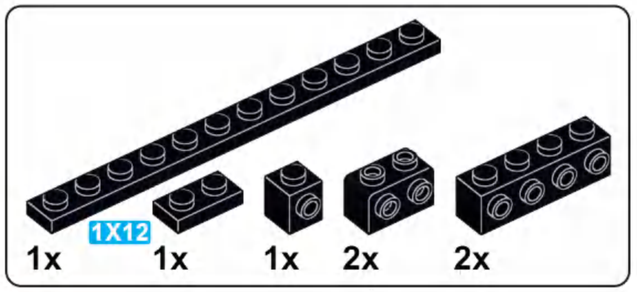

M55

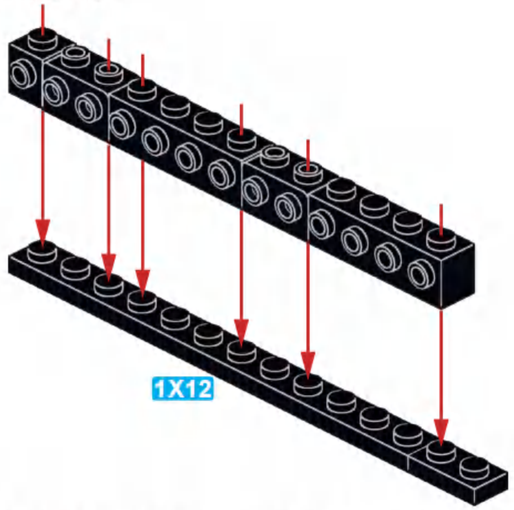

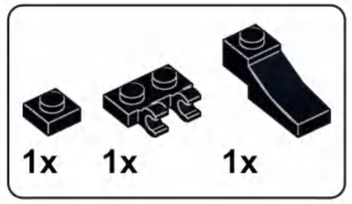

M56

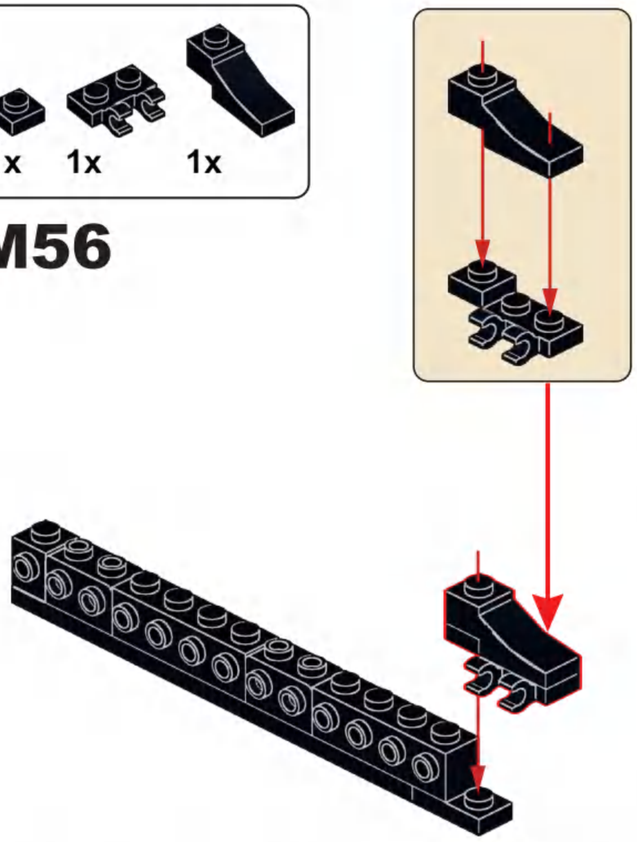

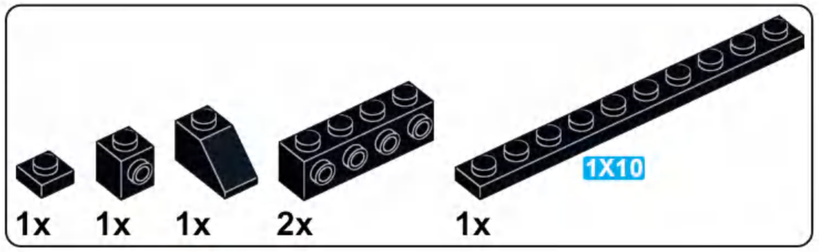

M57

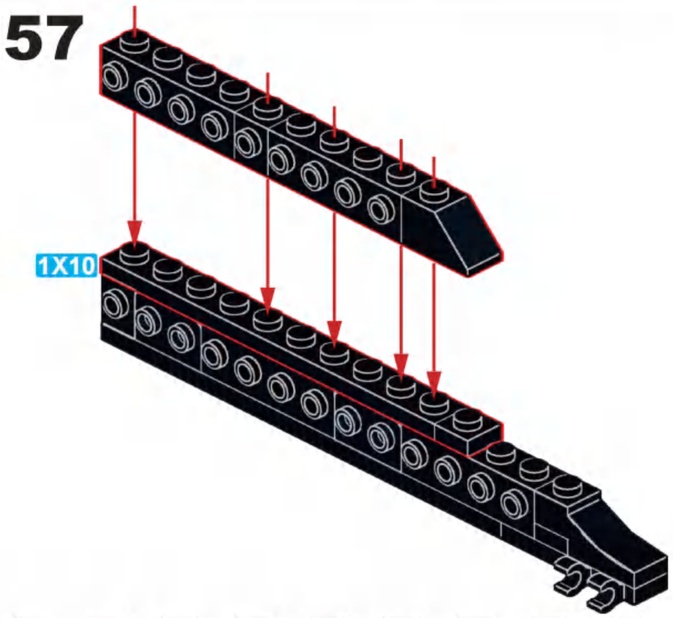

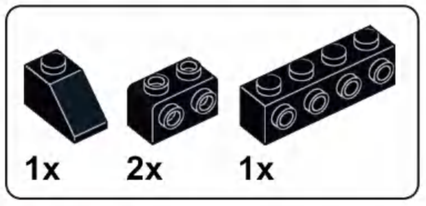

M58

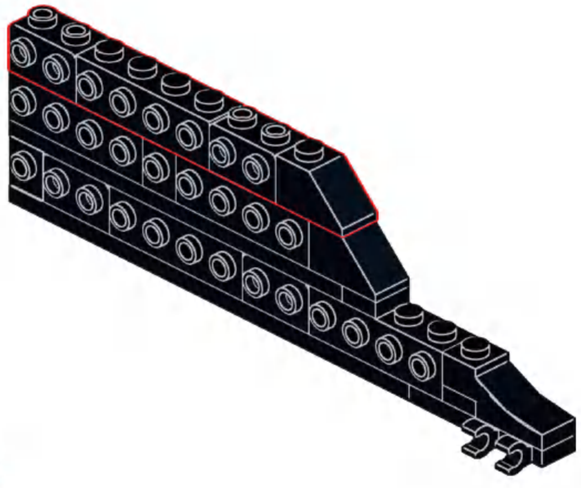

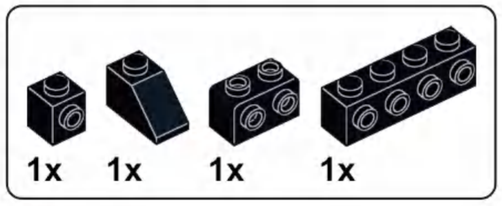

M59

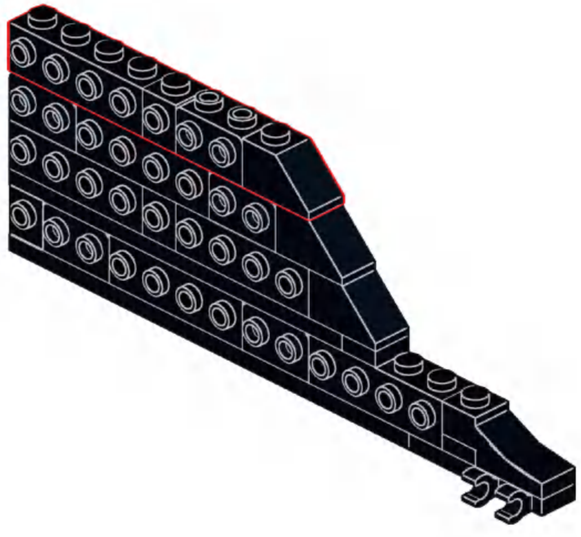

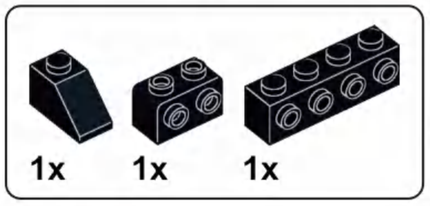

M60

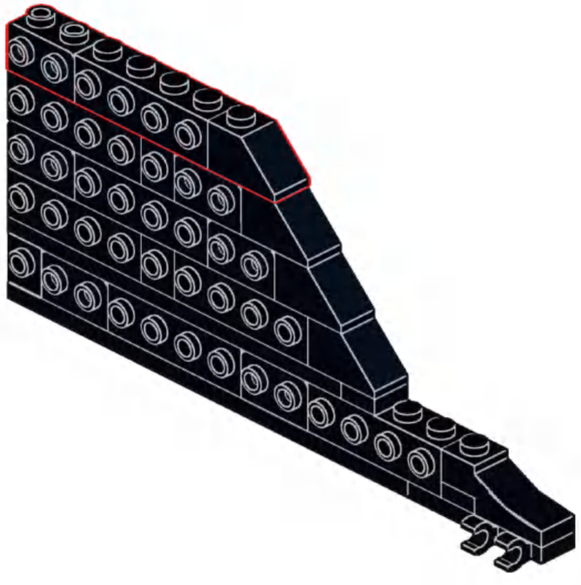

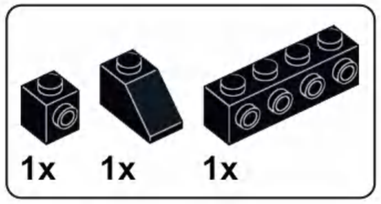

M61

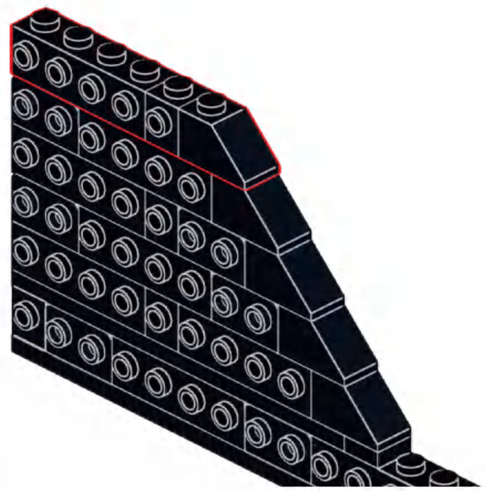

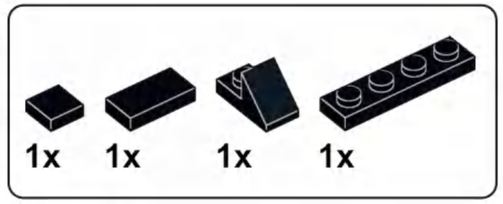

M62

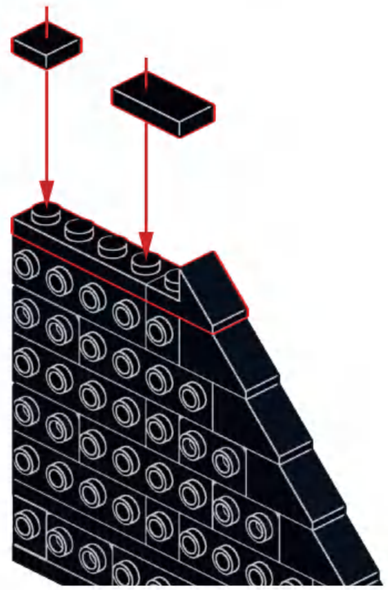

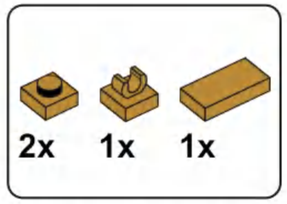

M63

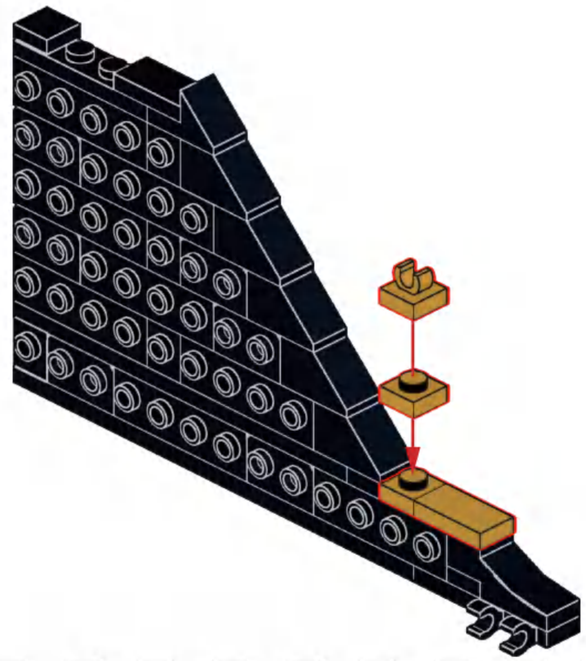

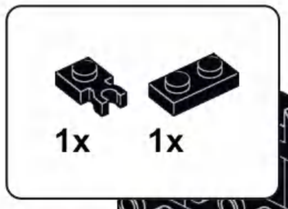

M64

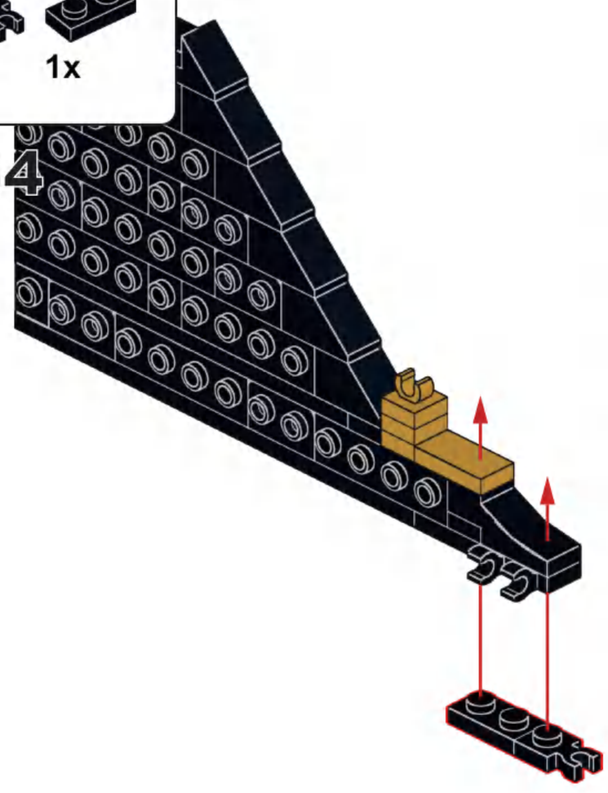

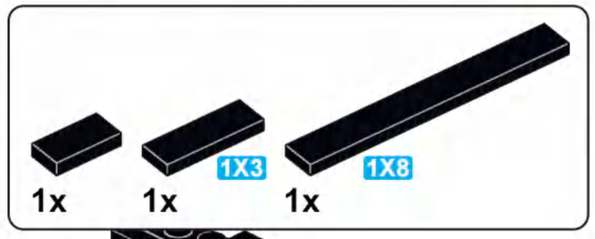

M65

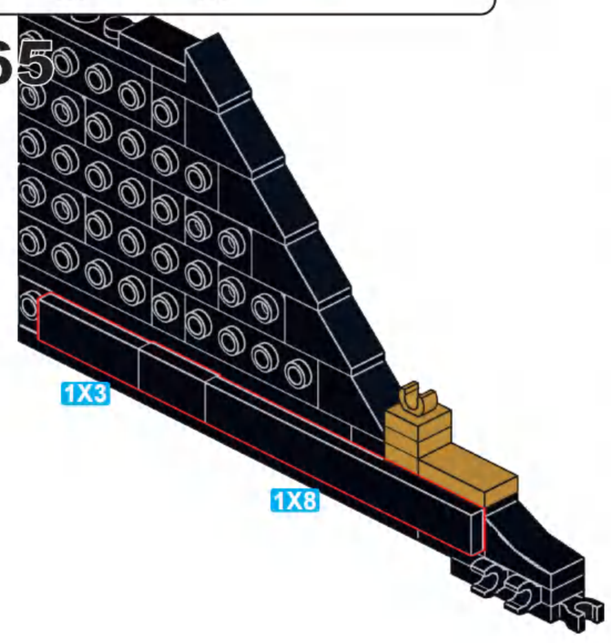

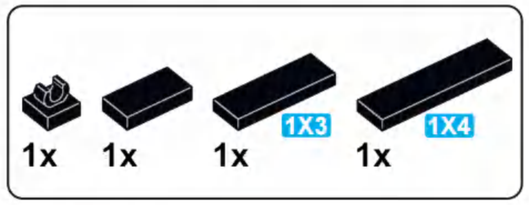

M66

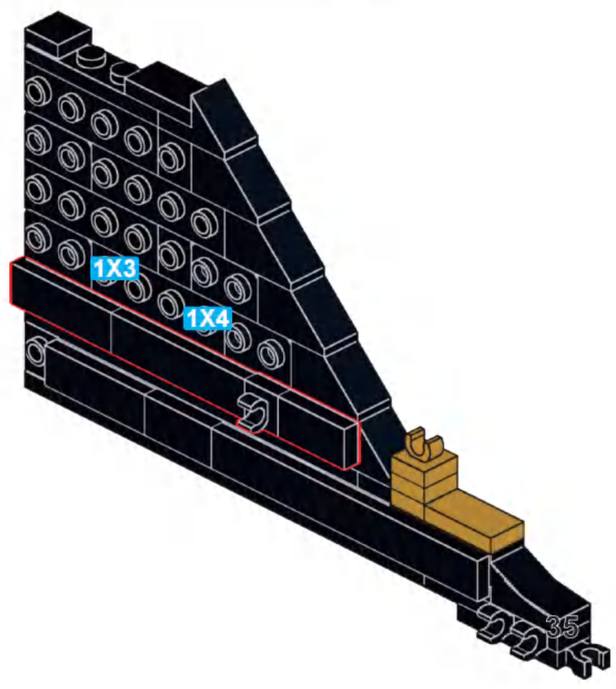

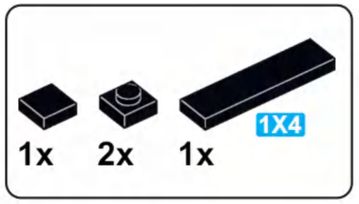

M67

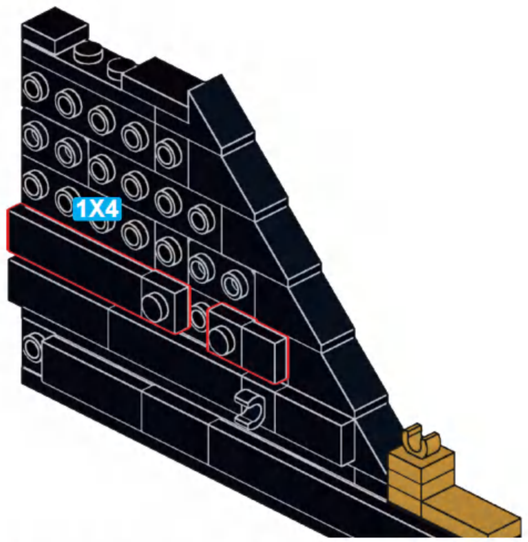

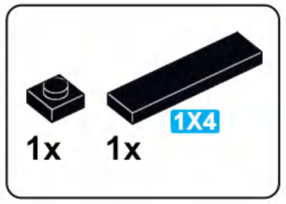

M68

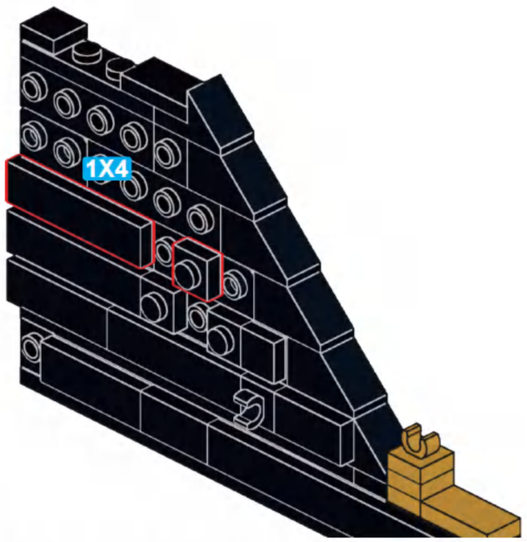

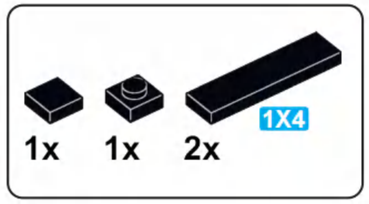

M69

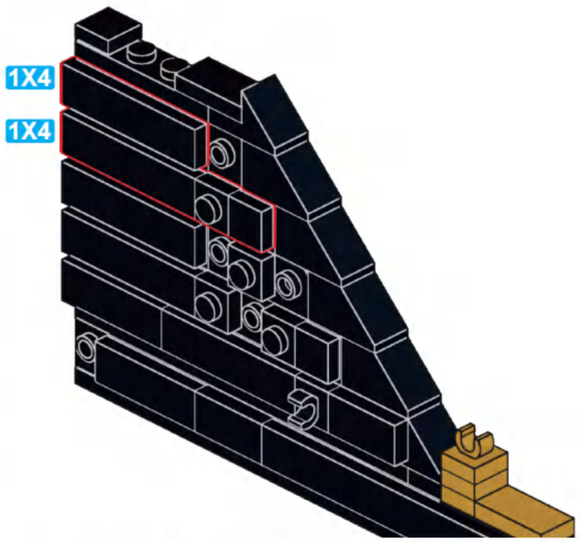

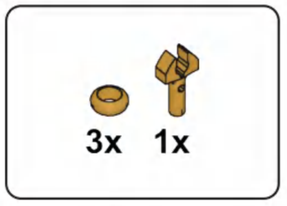

M70

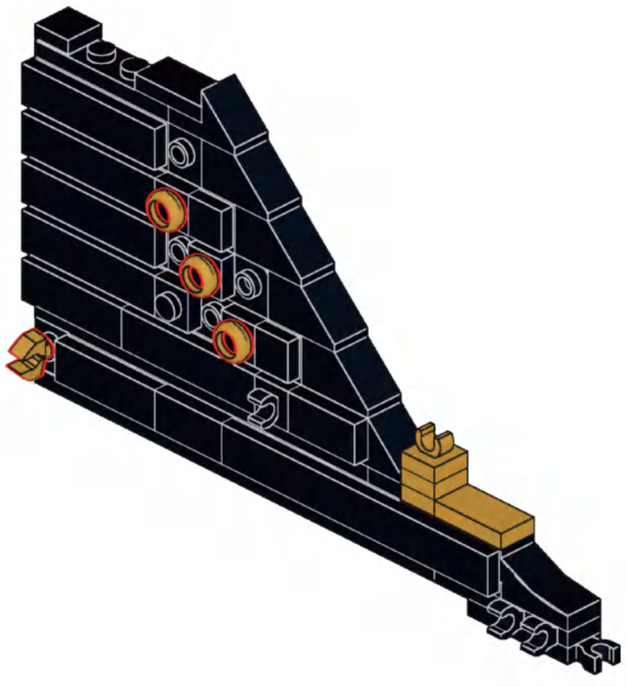

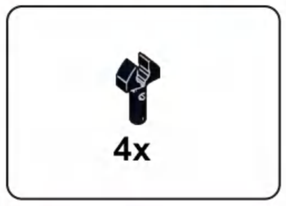

M71

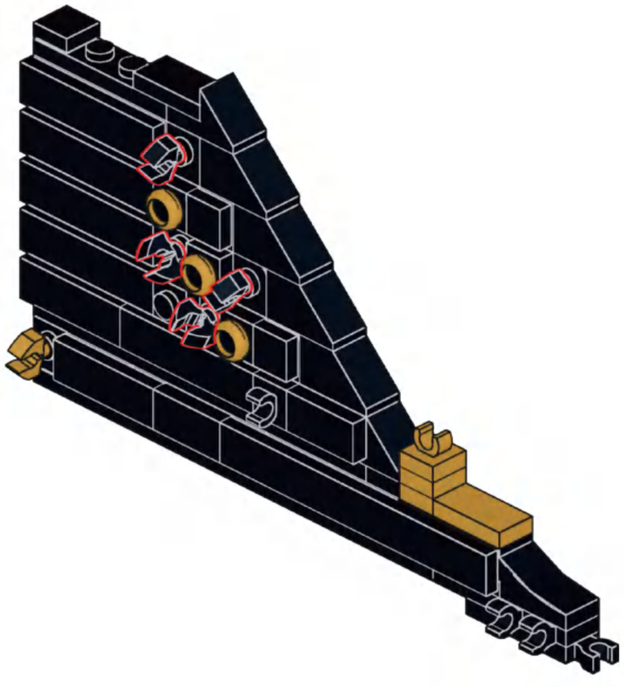

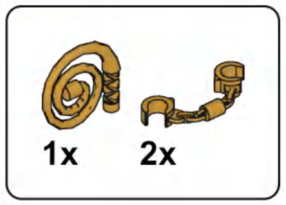

M72

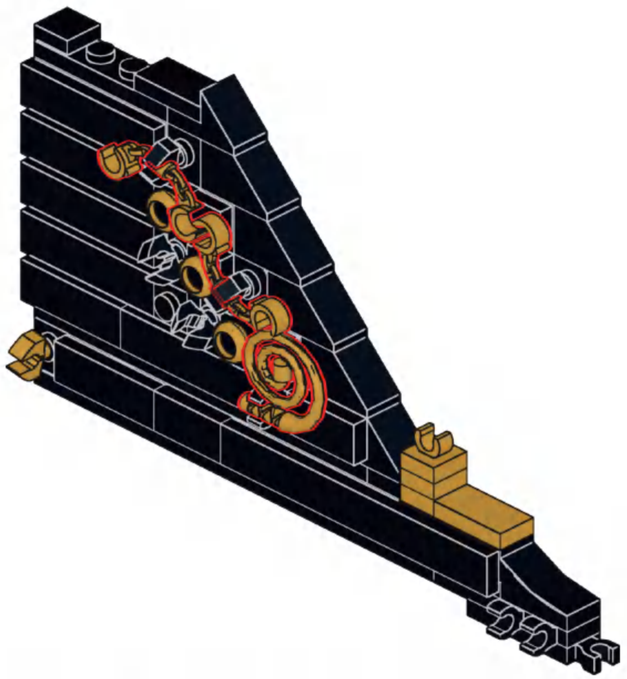

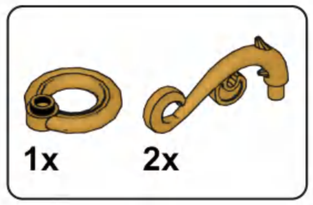

M73

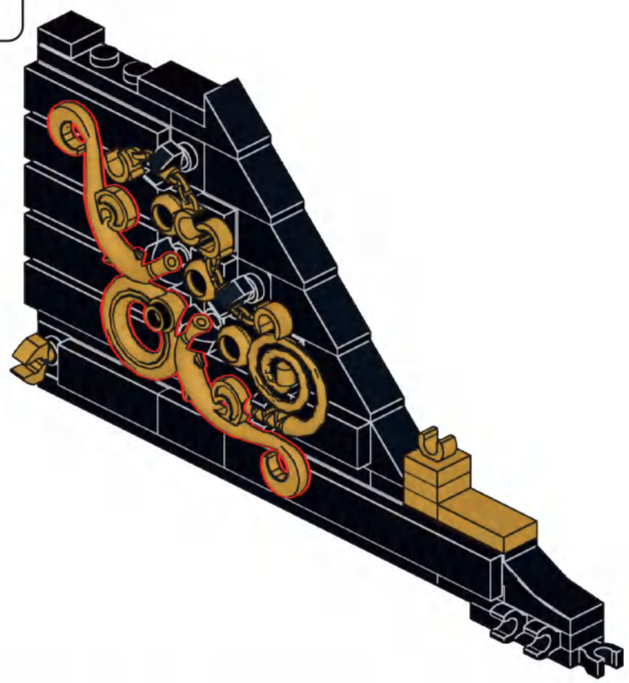

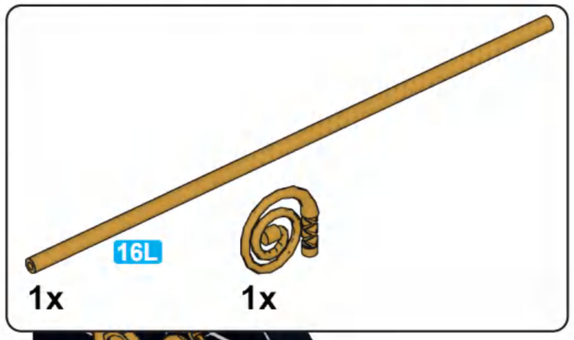

M74

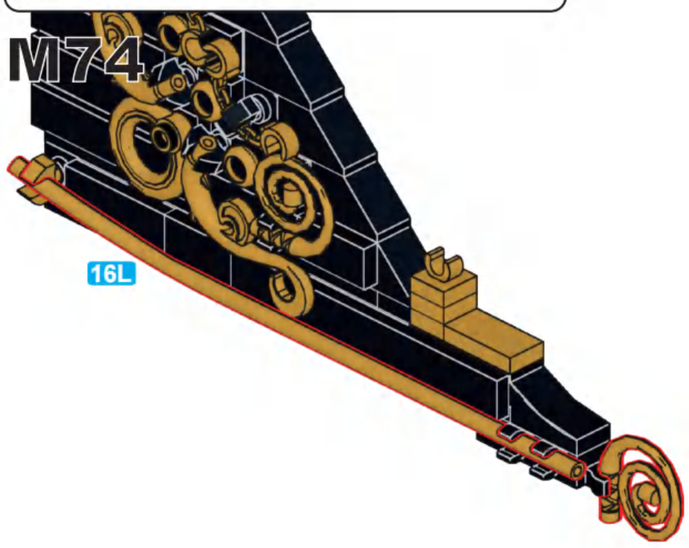

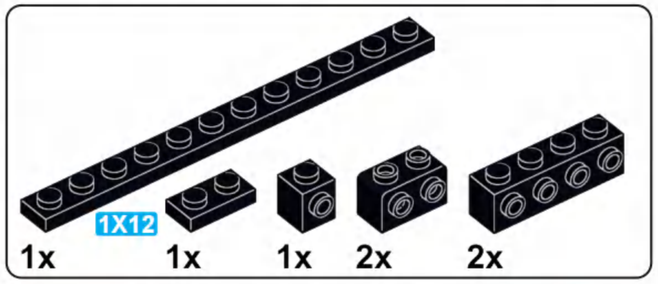

M75

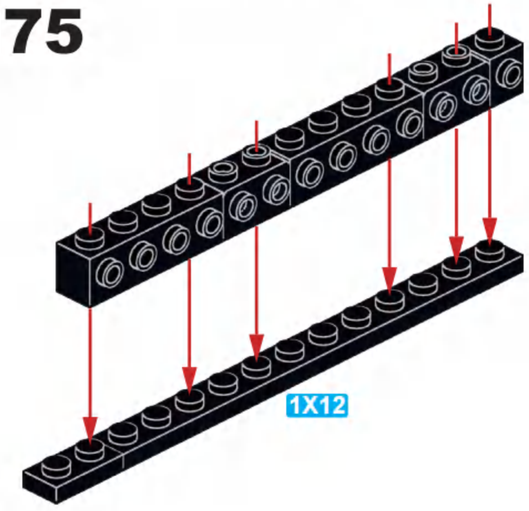

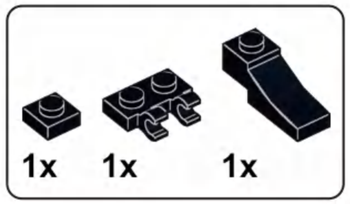

M76

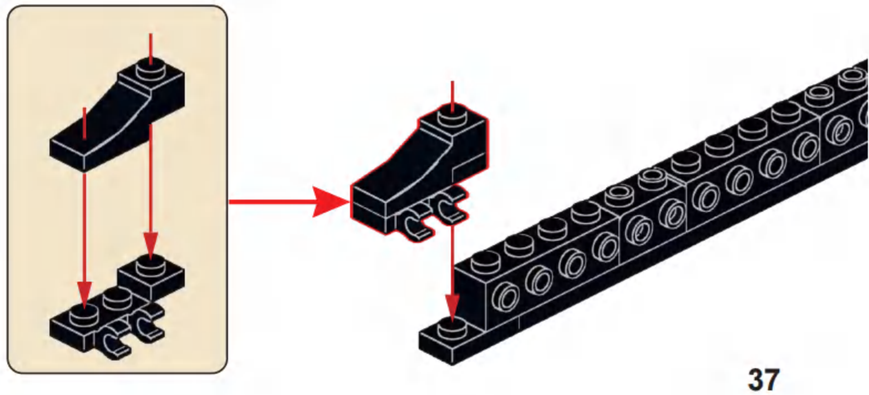

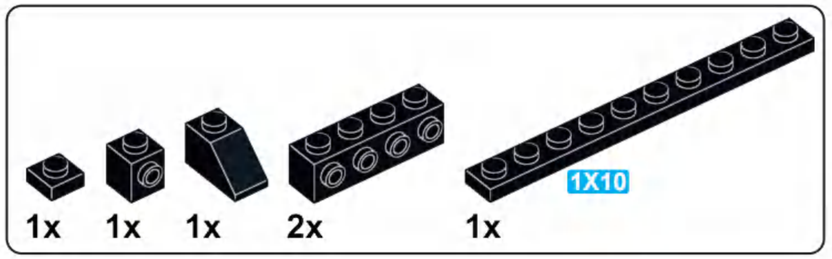

M77

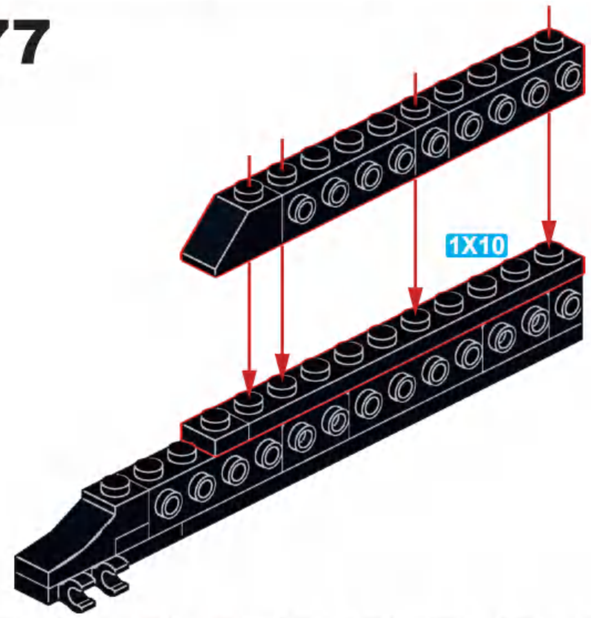

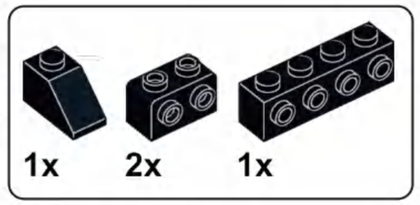

M78

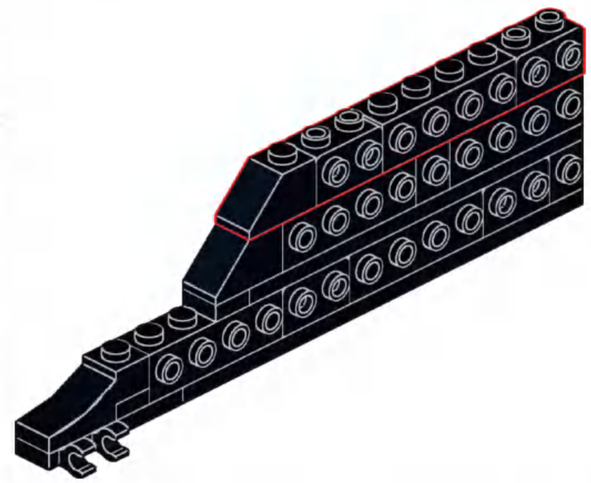

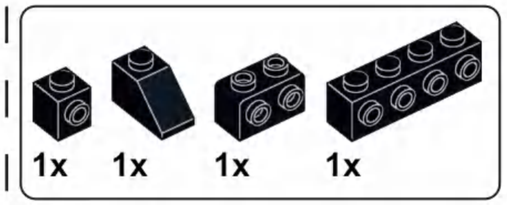

M79

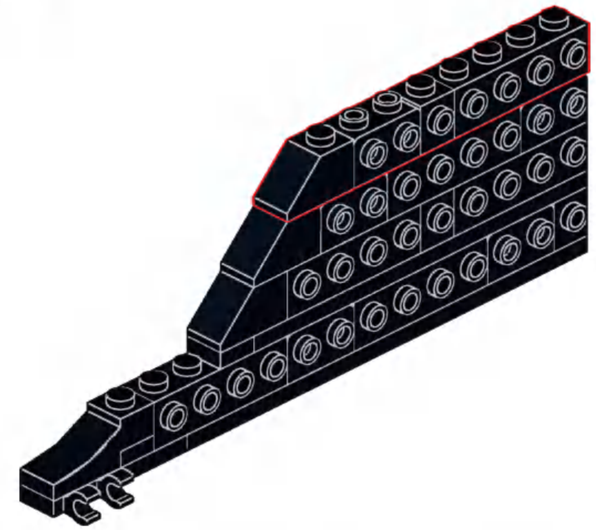

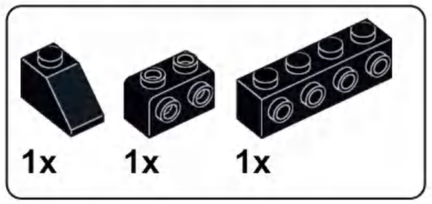

M80

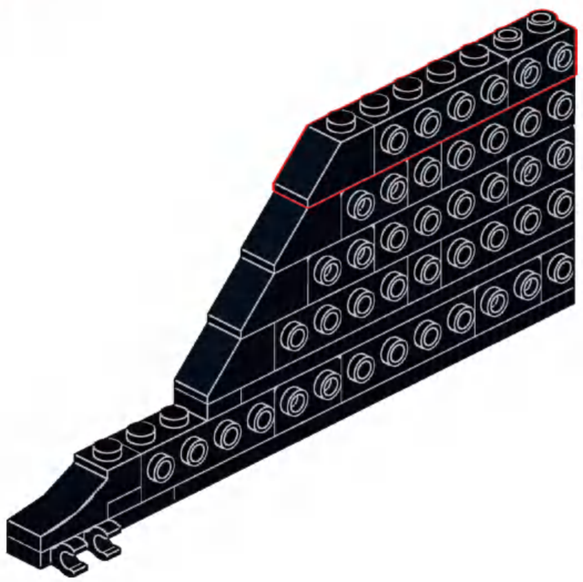

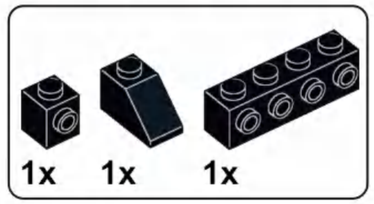

M81

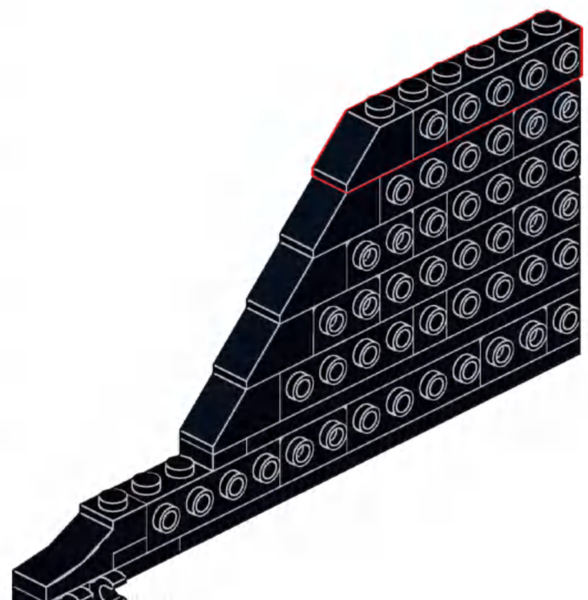

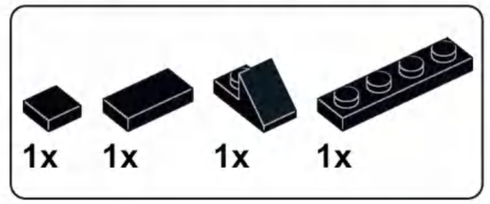

M82

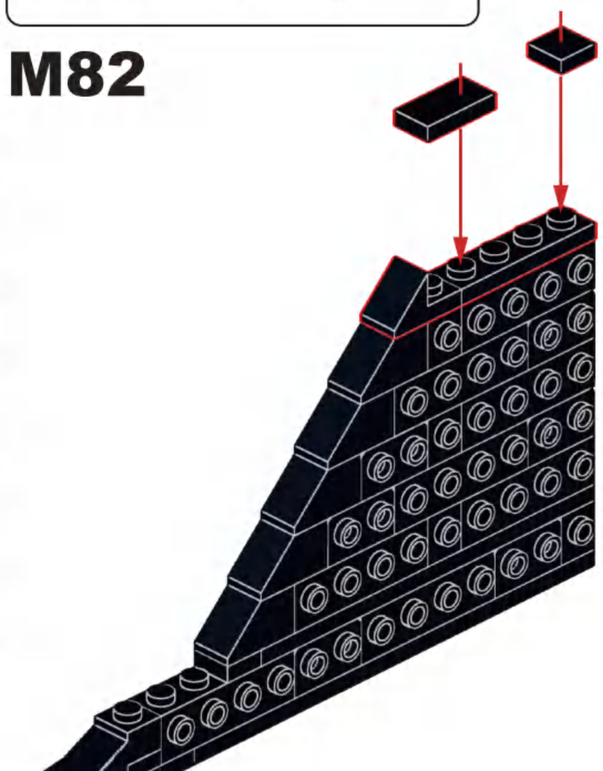

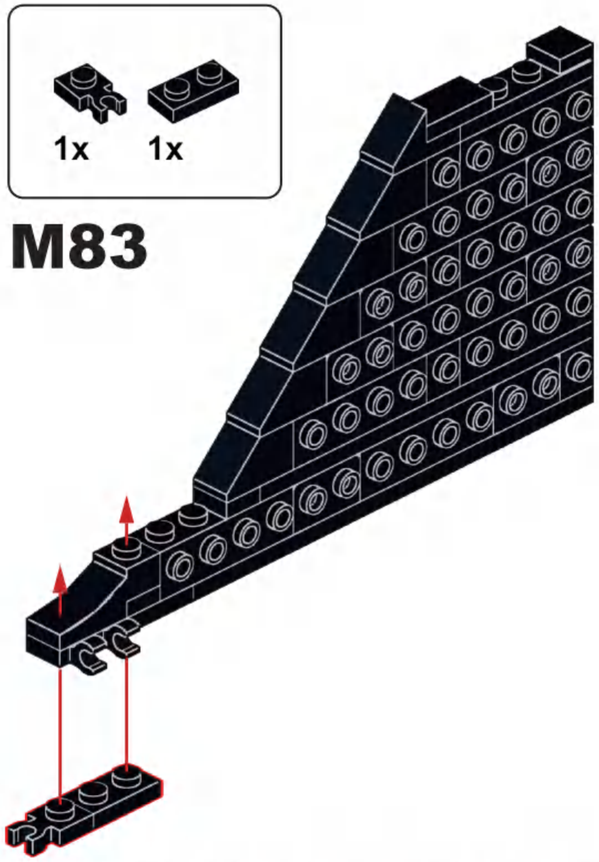

M83

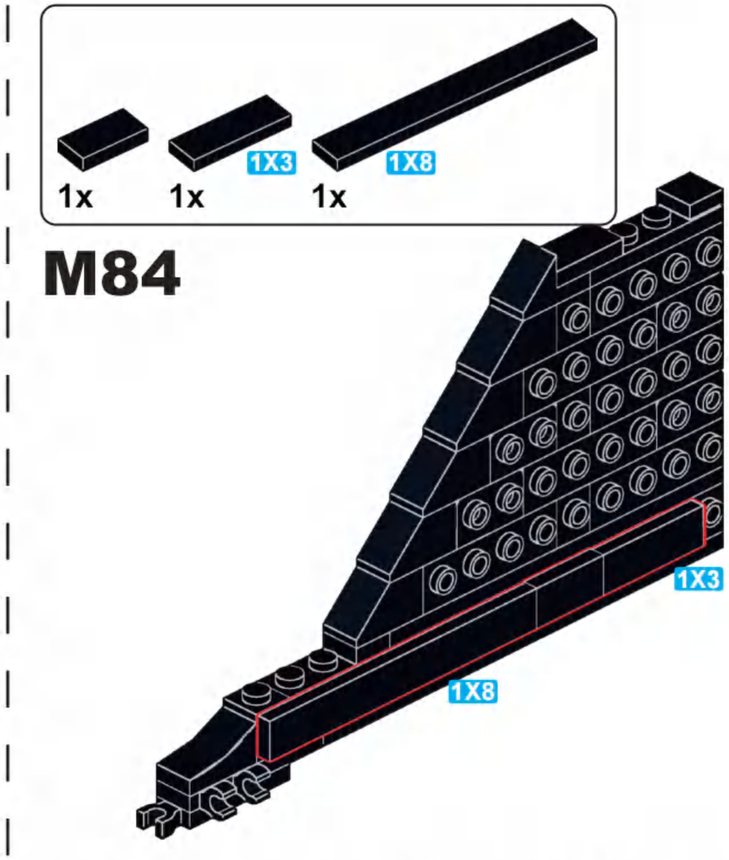

M84

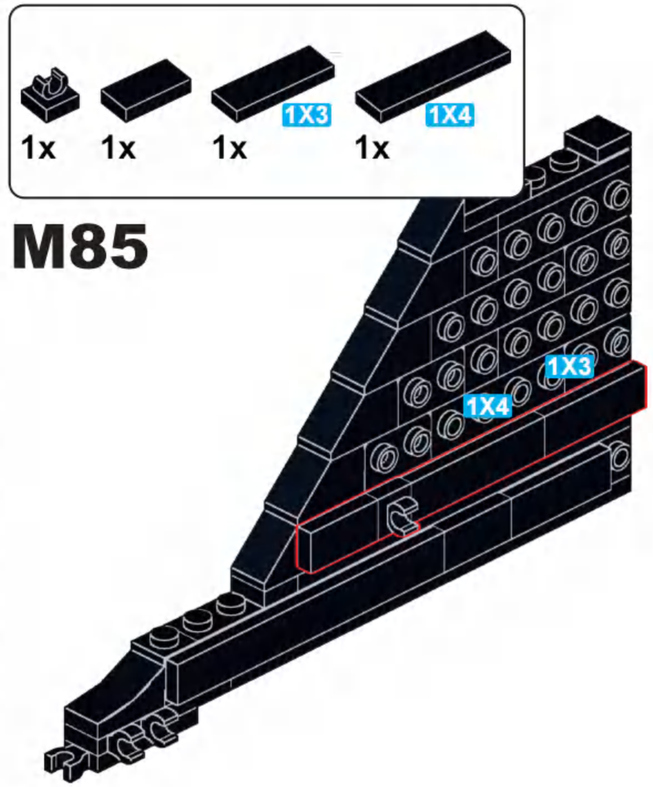

M85

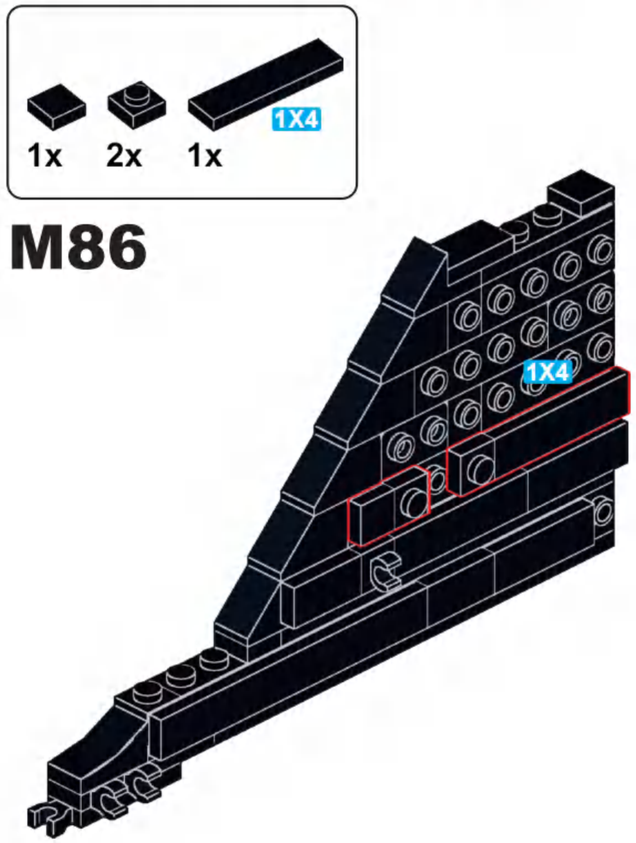

M86

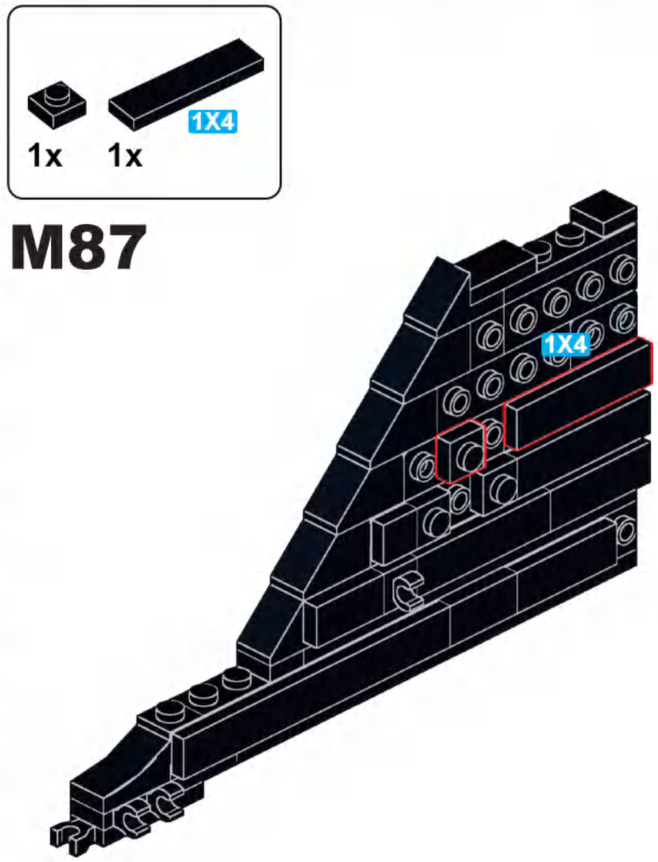

M87

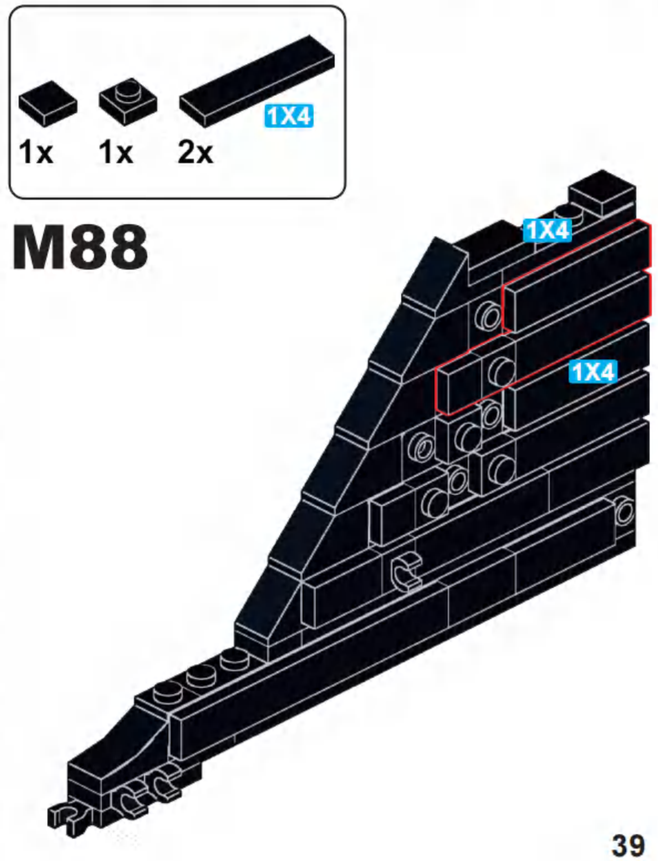

M88

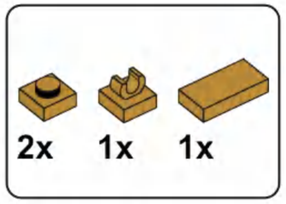

M89

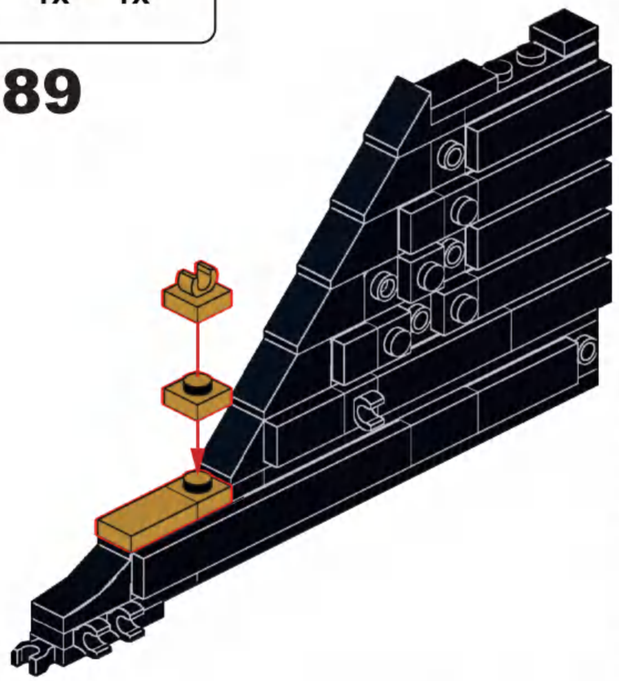

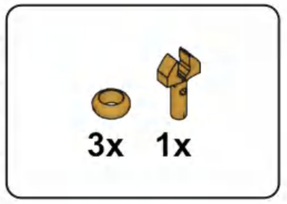

M90

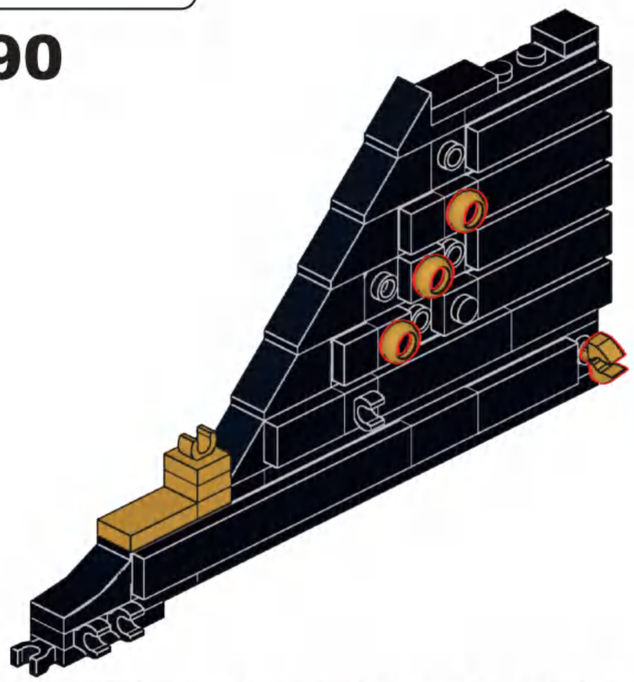

M91

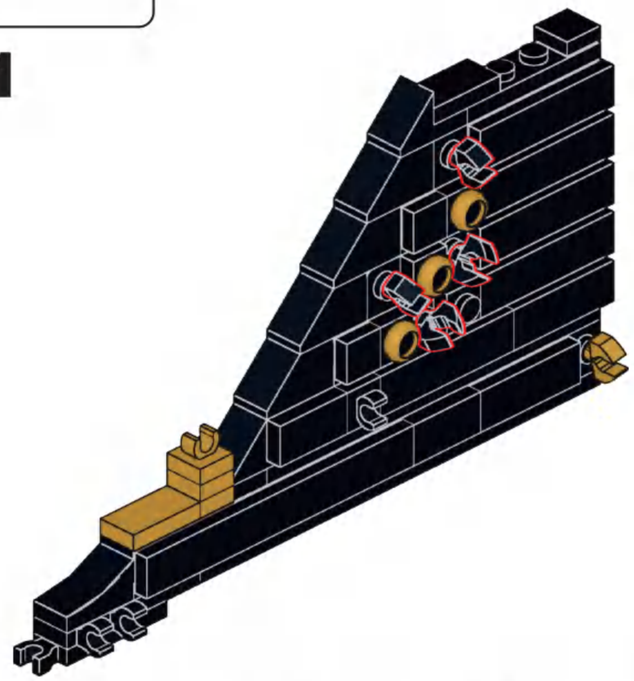

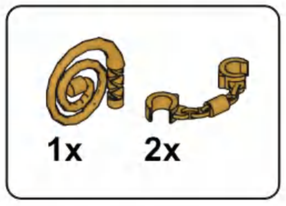

M92

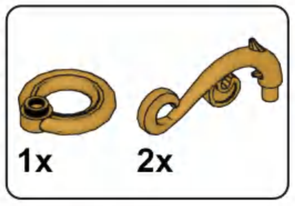

M93

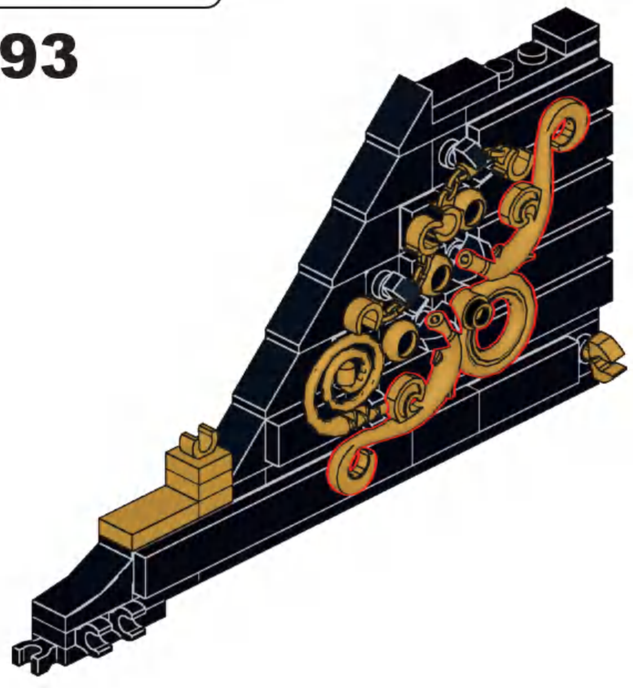

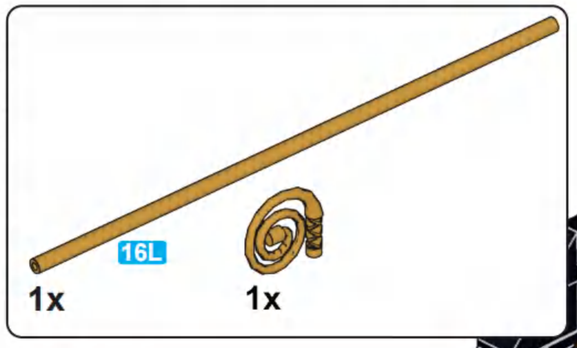

M94

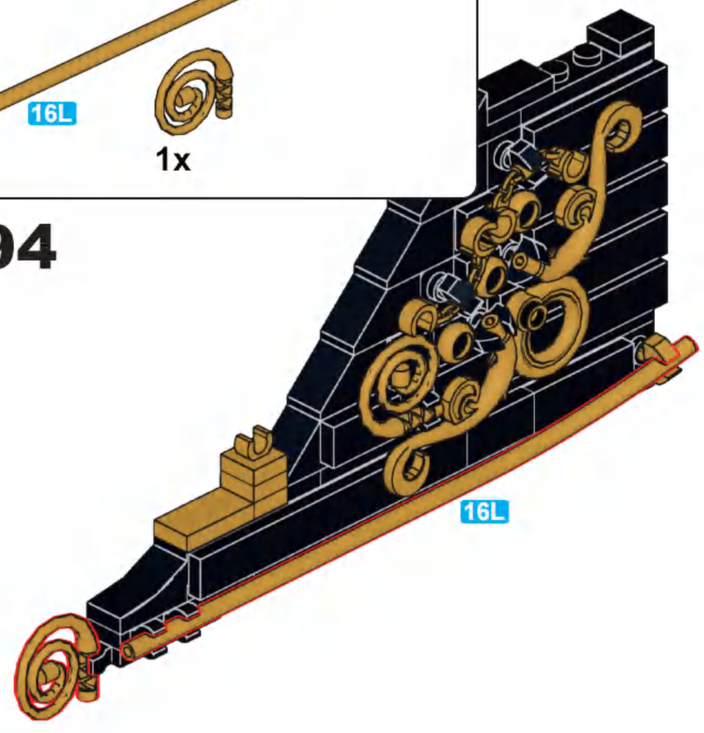

M95

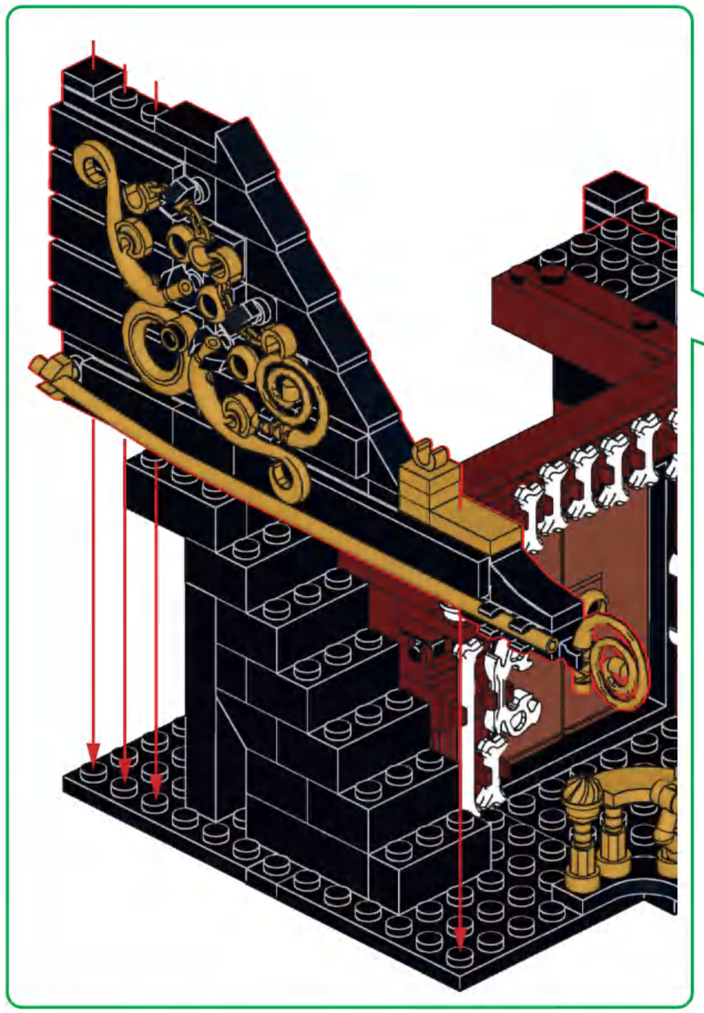

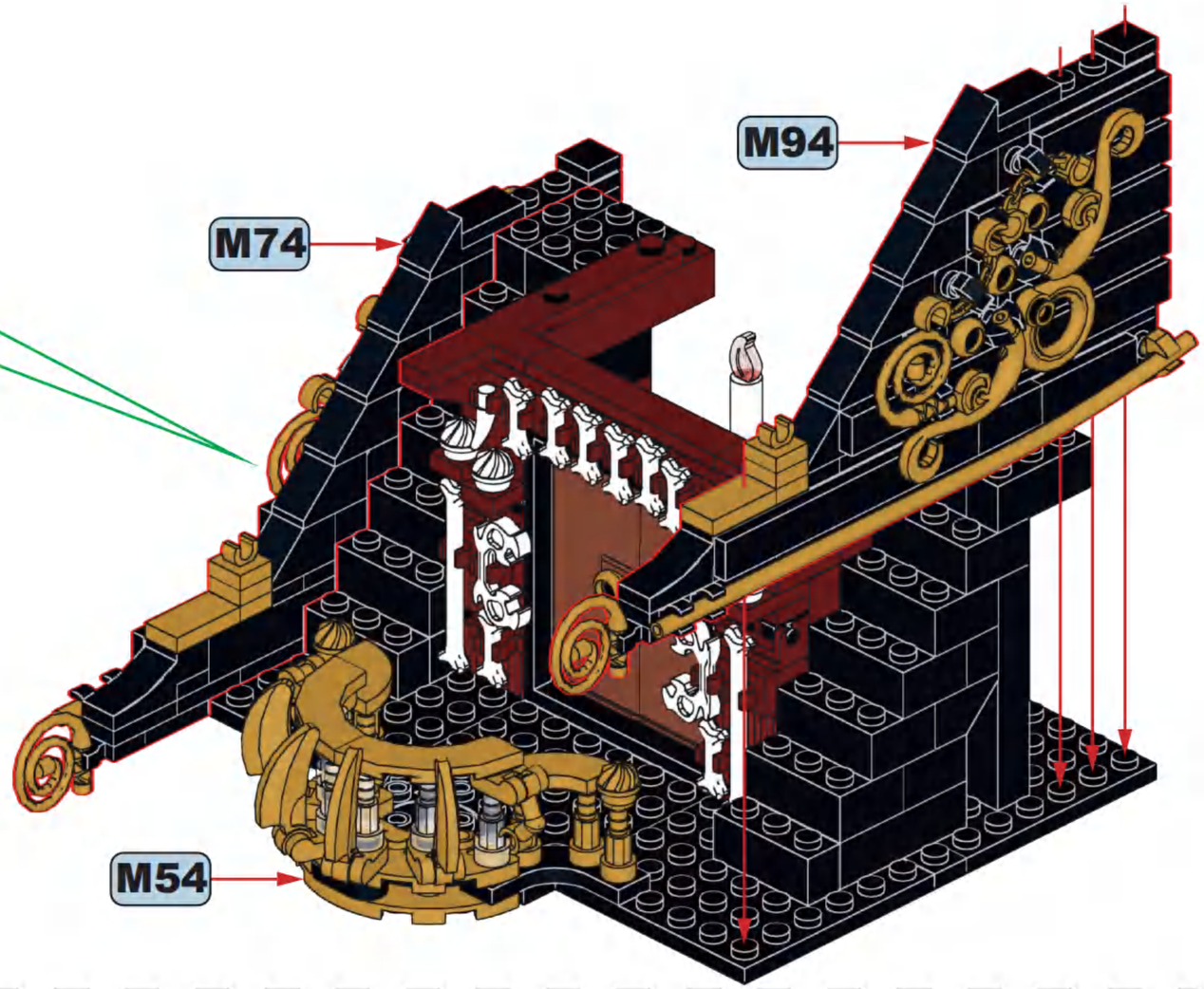

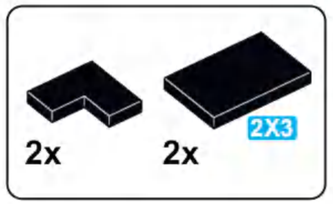

M96

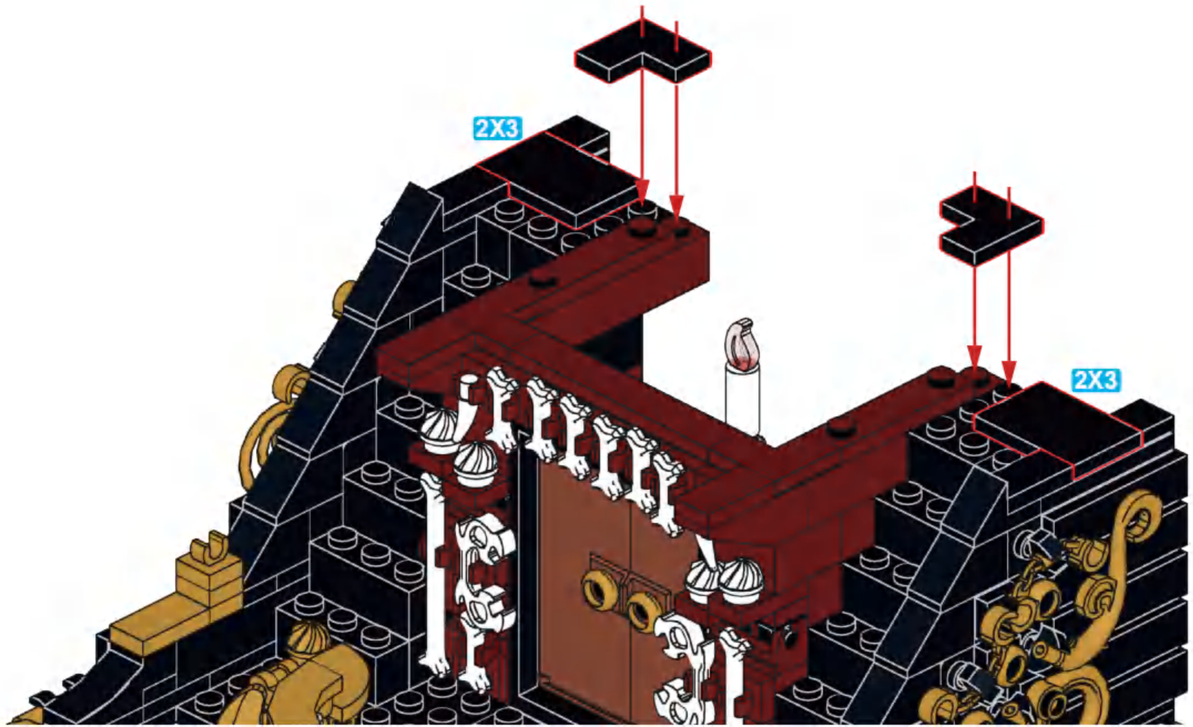

M97

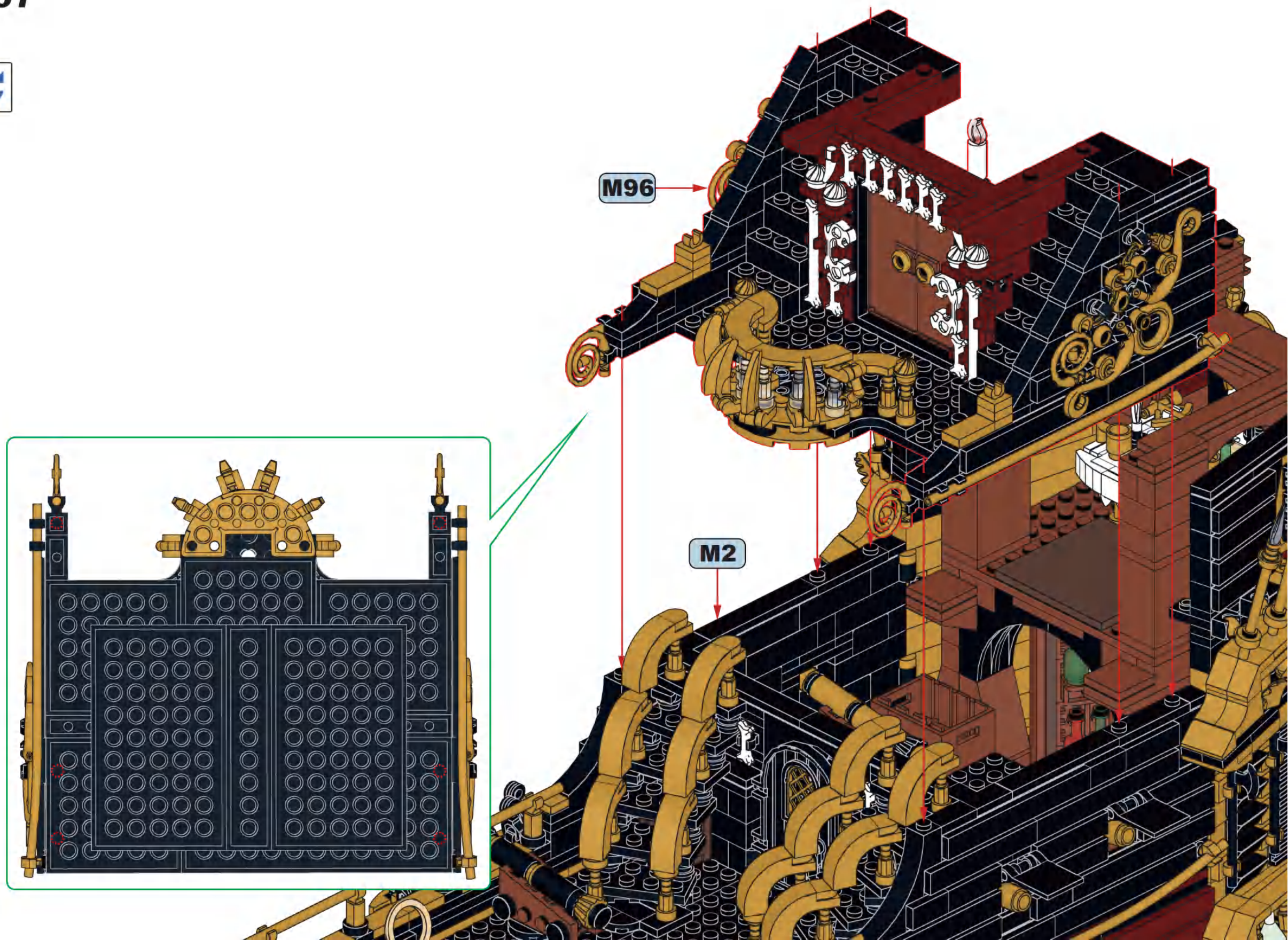

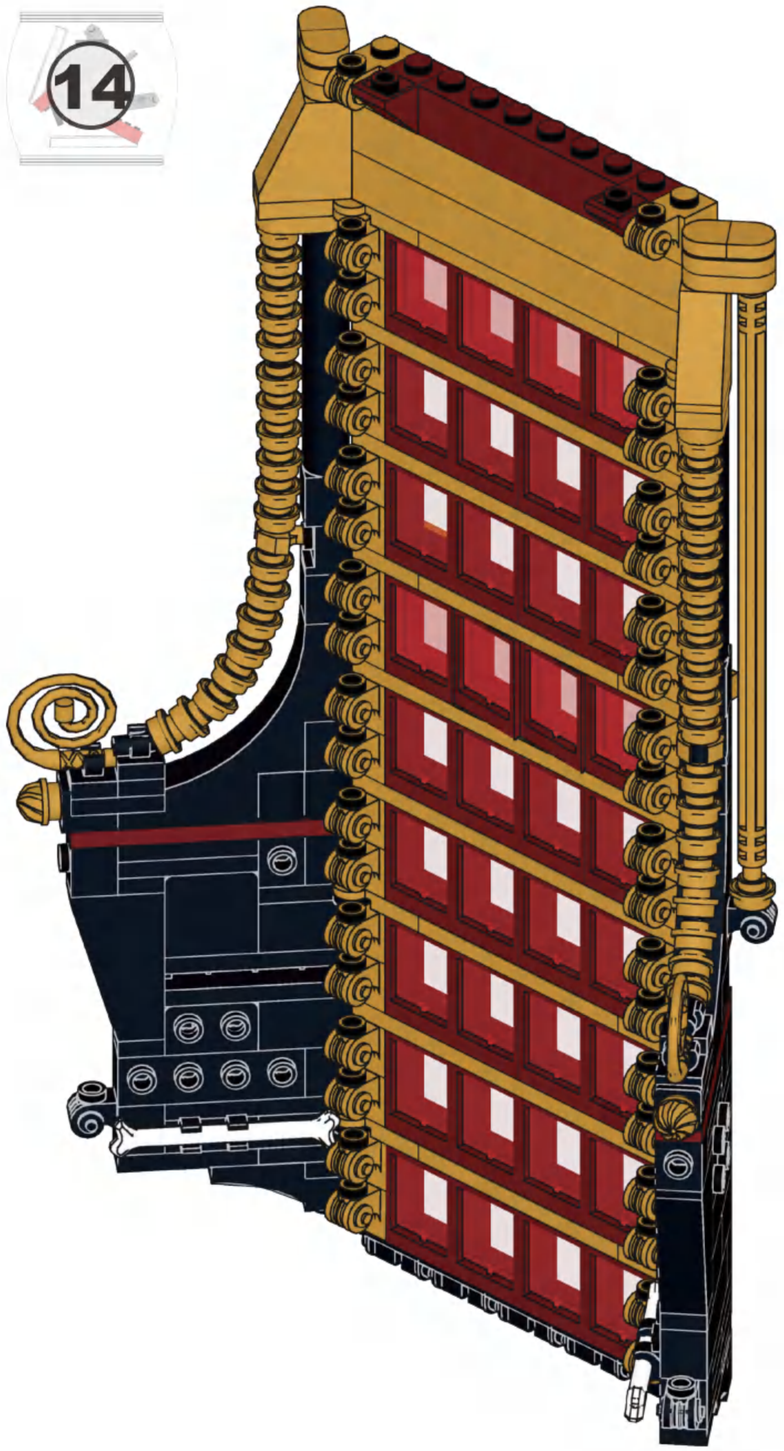

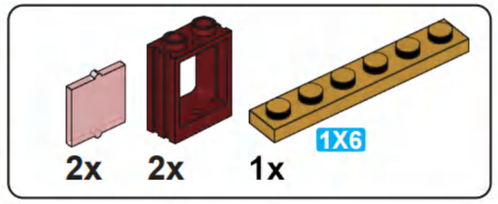

N1

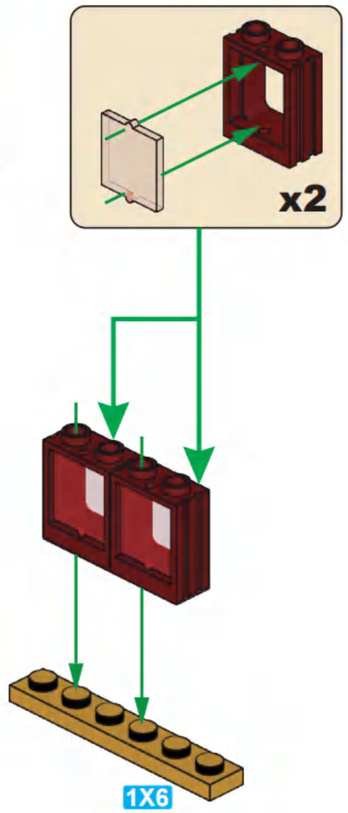

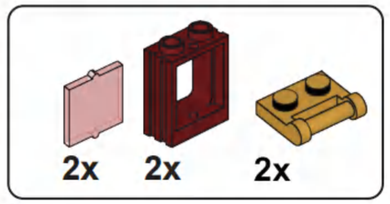

N2

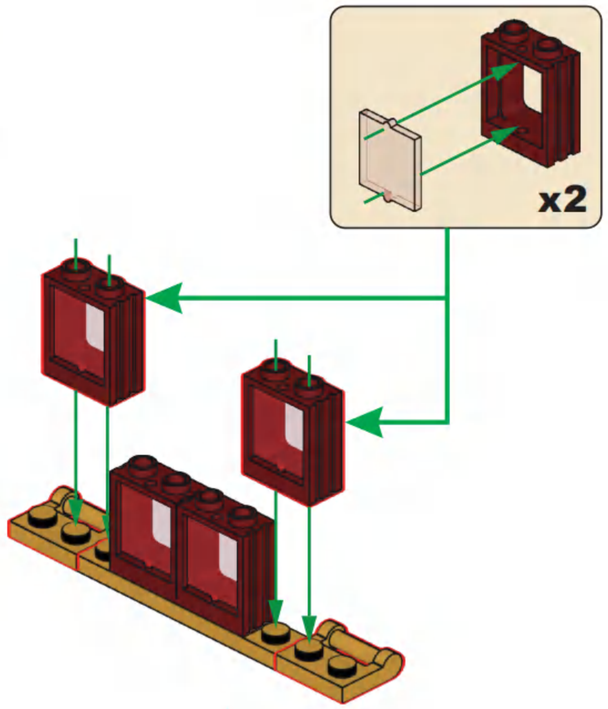

4x

N3

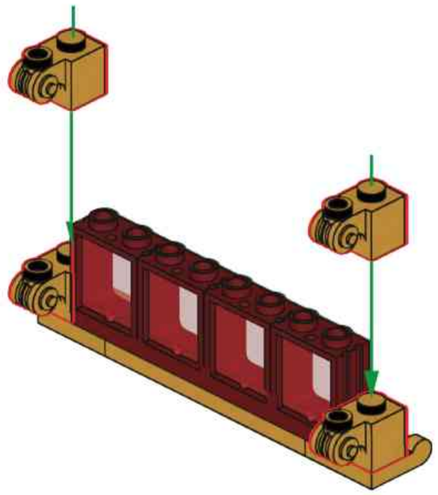

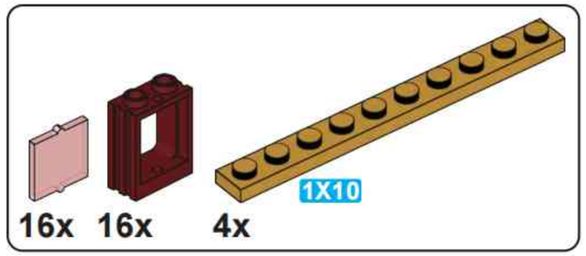

N4

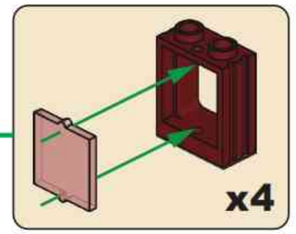

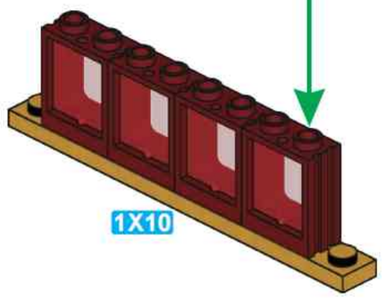

x4

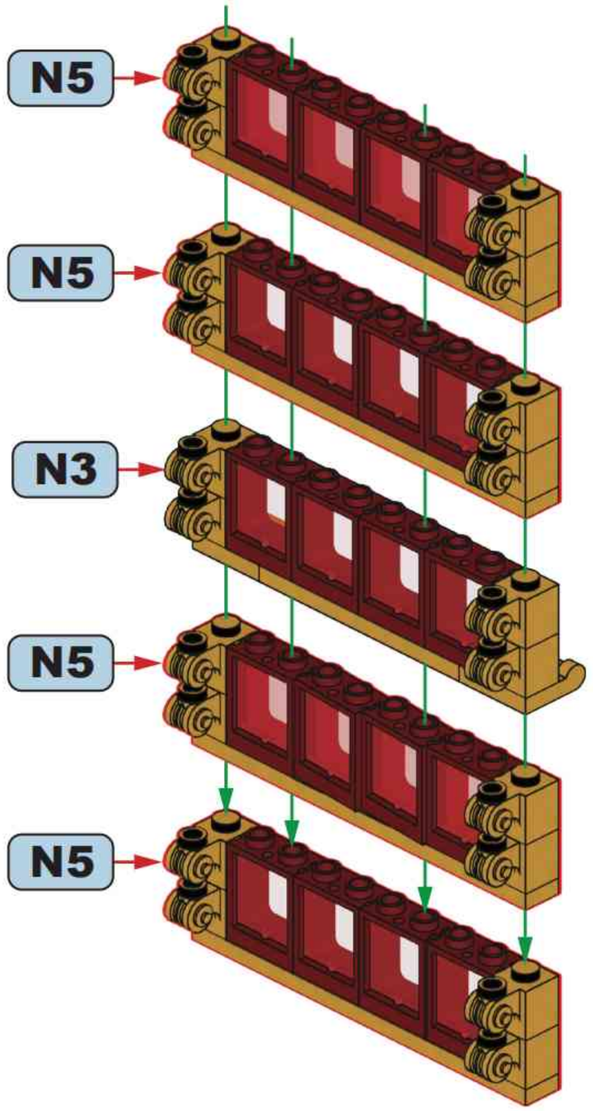

N6

16x

N5

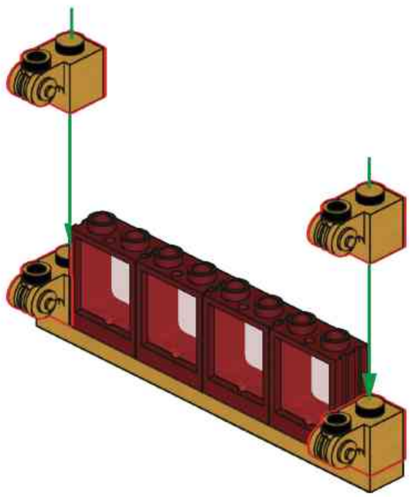

x4

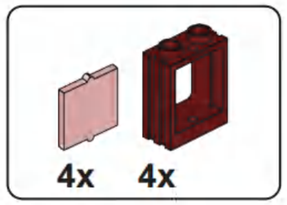

N7

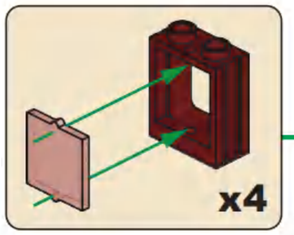

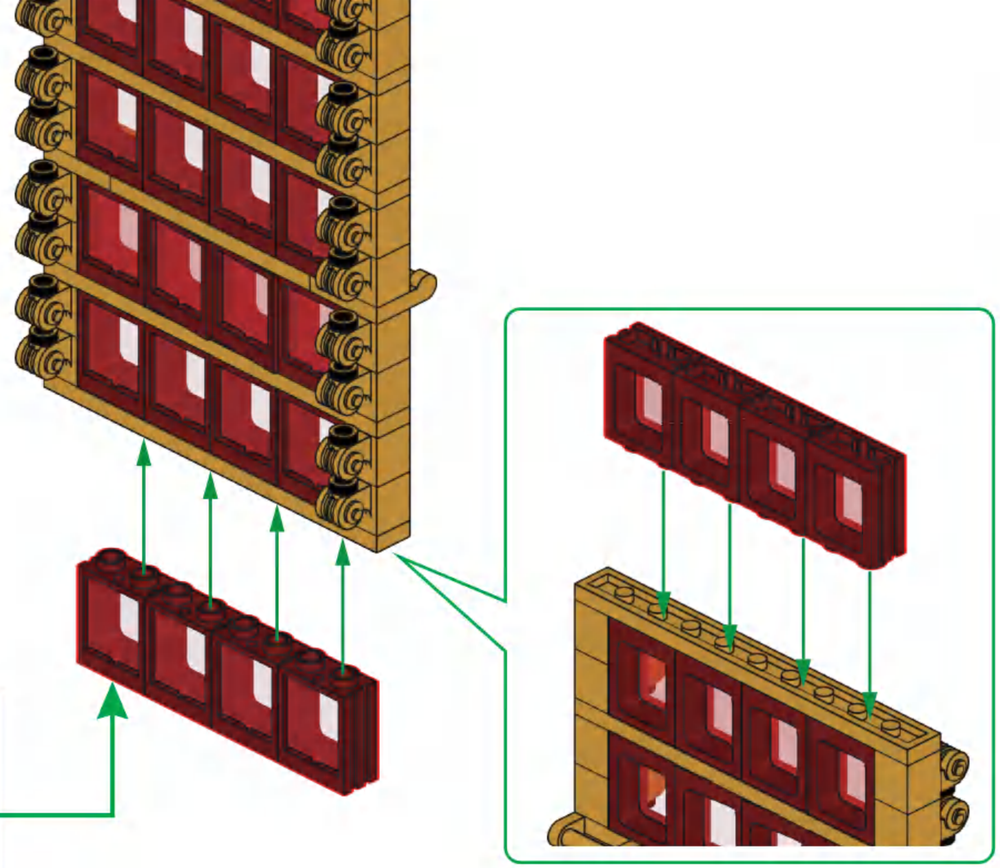

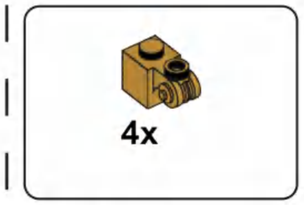

N8

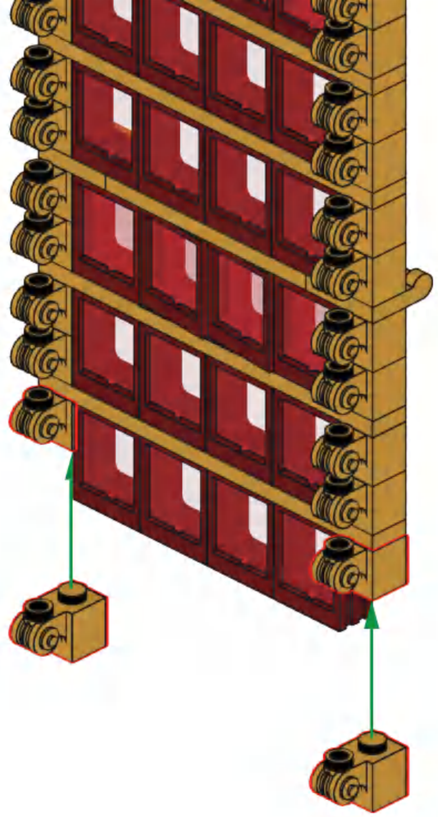

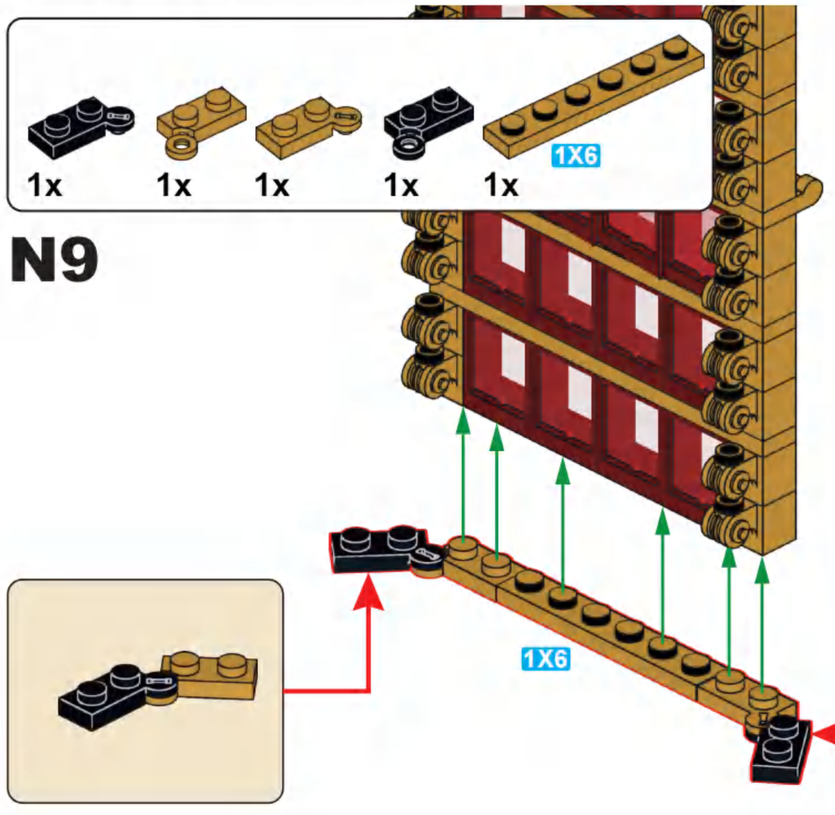

N9

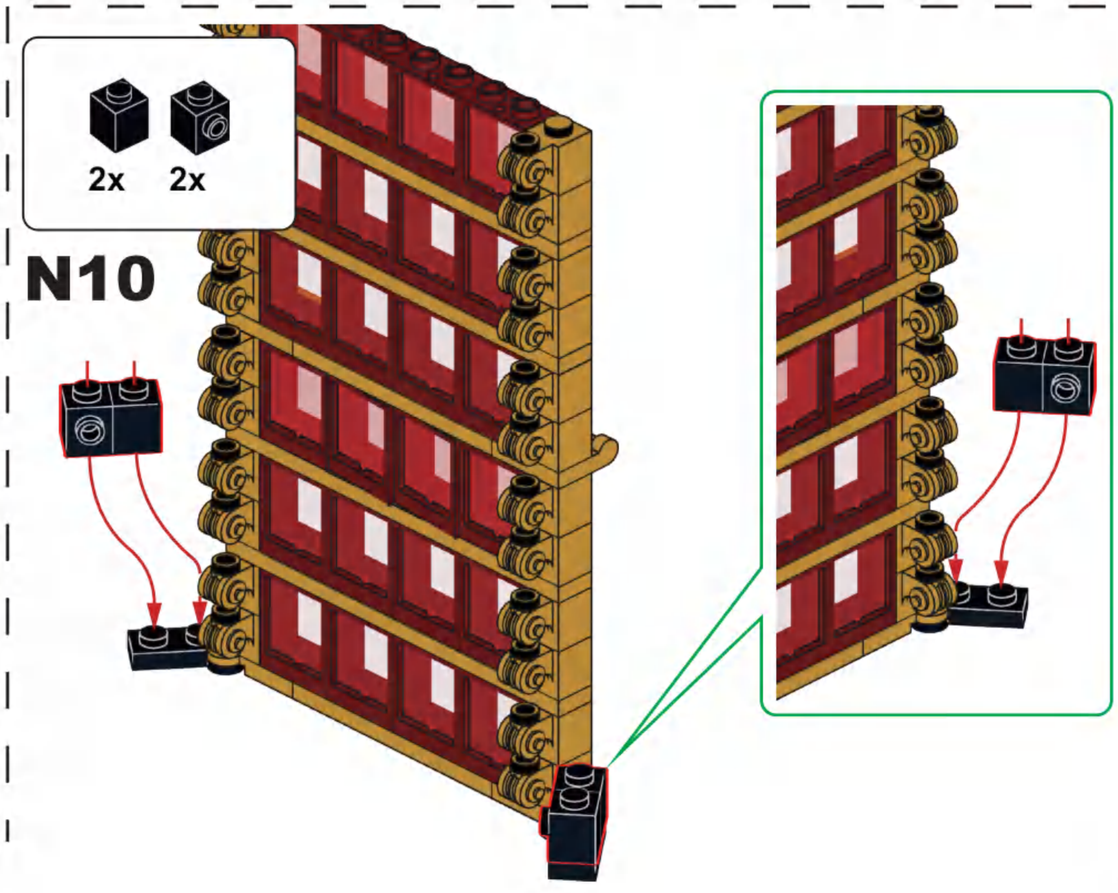

N10

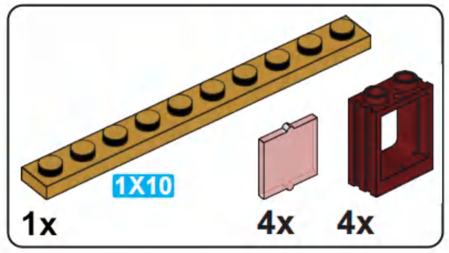

N11

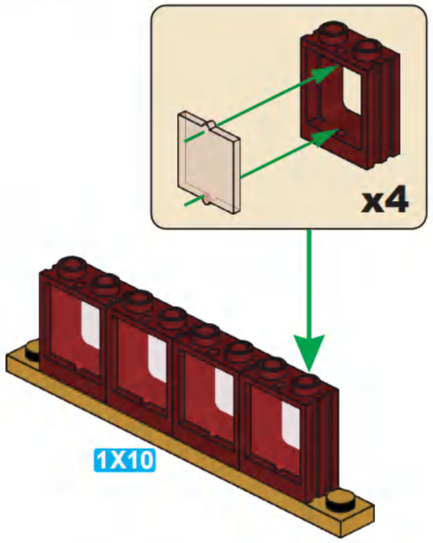

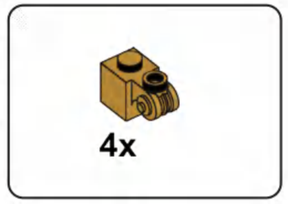

N12

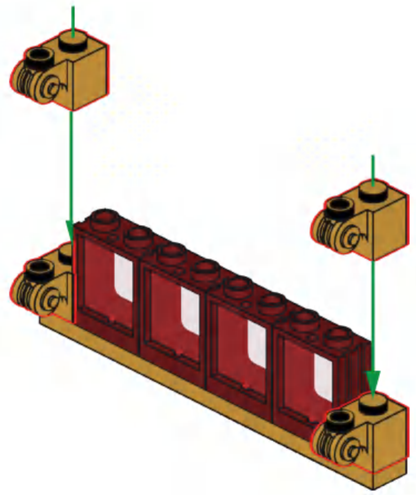

N13

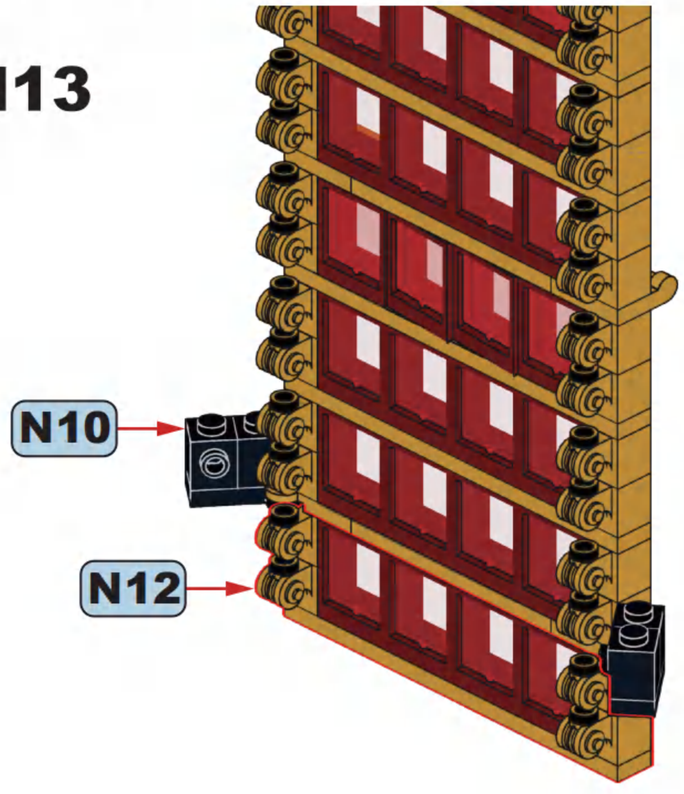

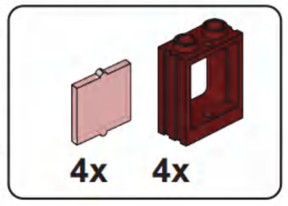

N14

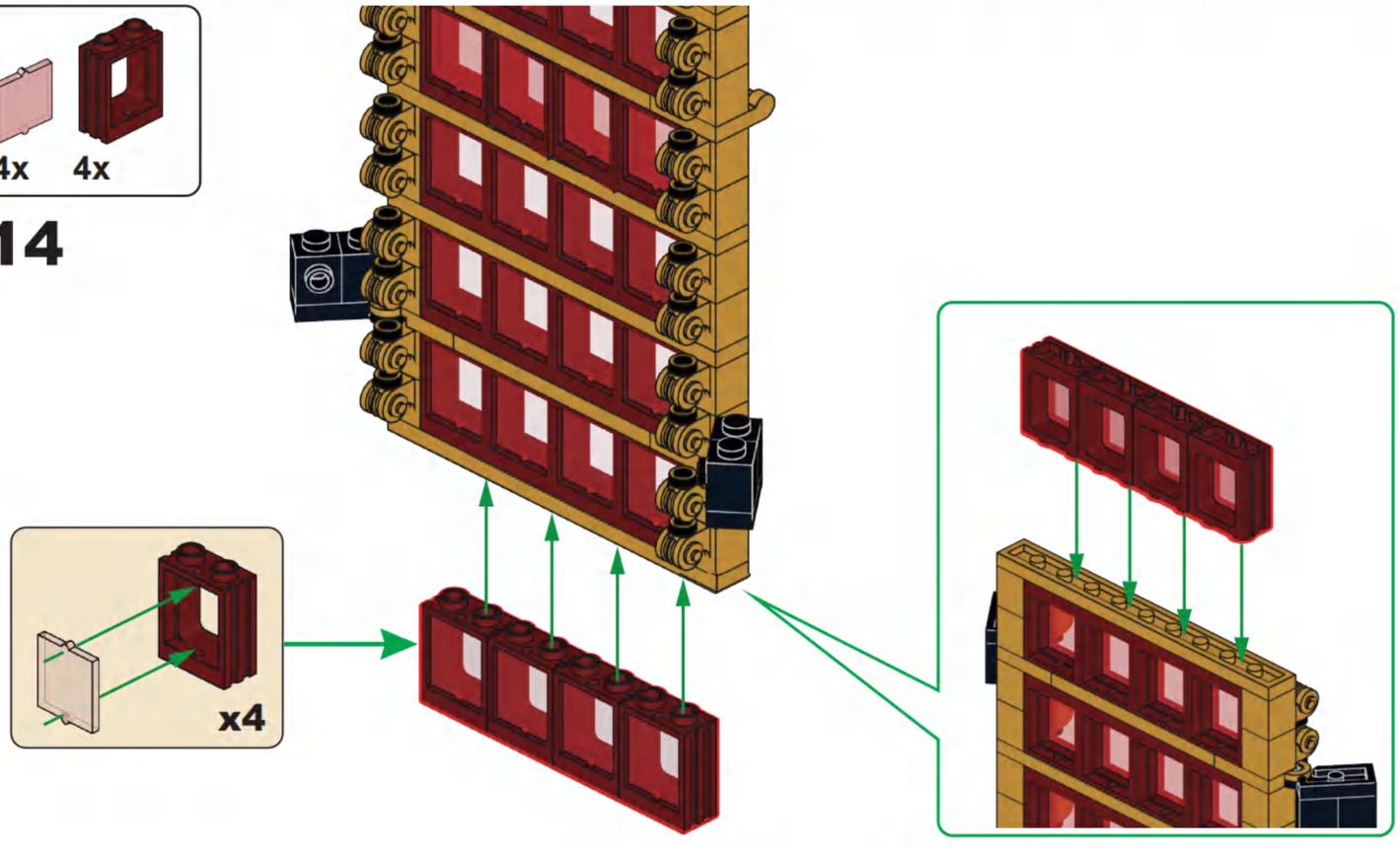

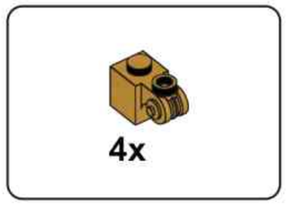

N15

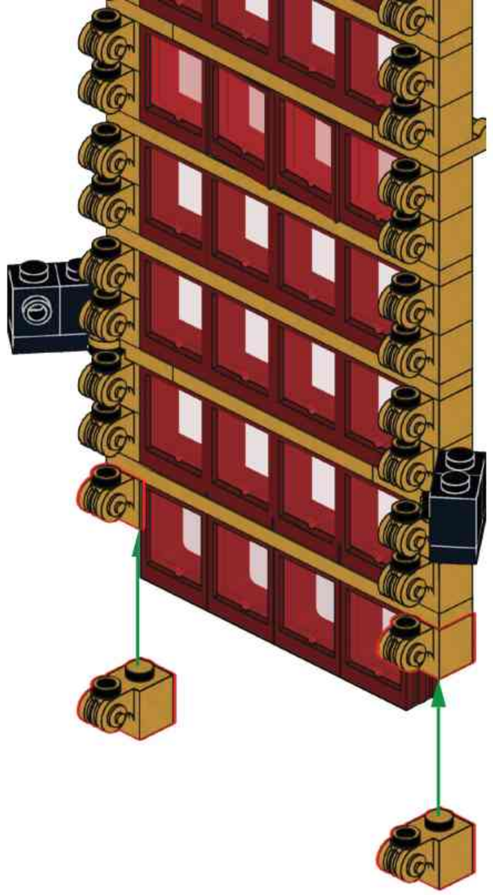

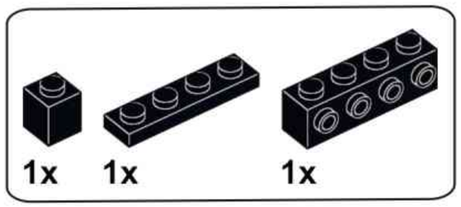

N16

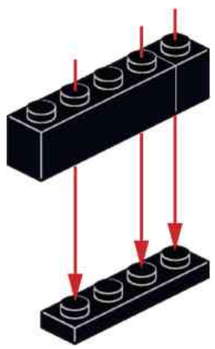

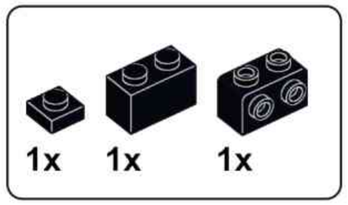

N17

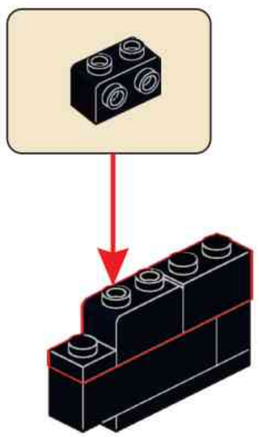

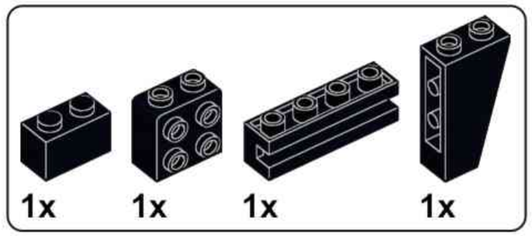

N18

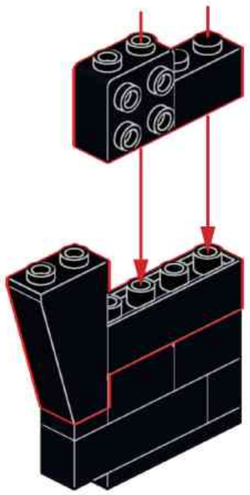

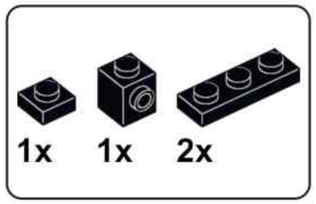

N19

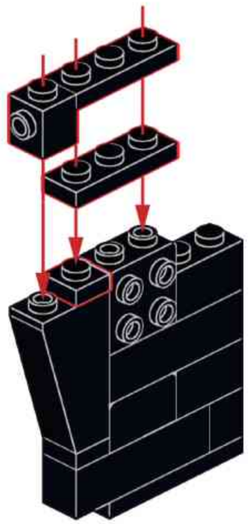

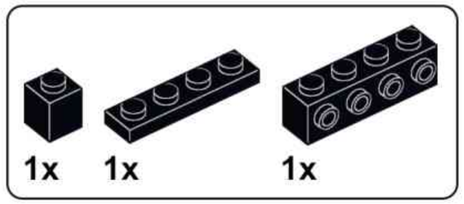

N20

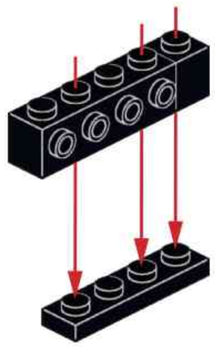

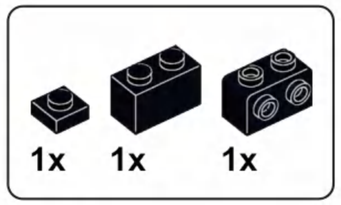

N21

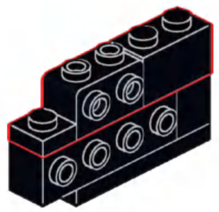

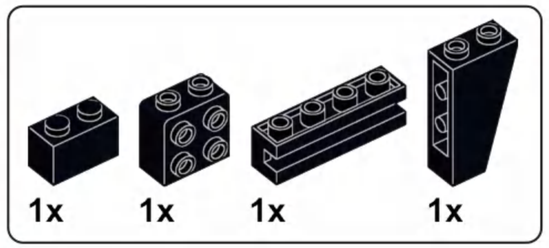

N22

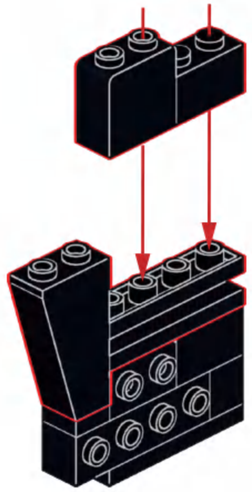

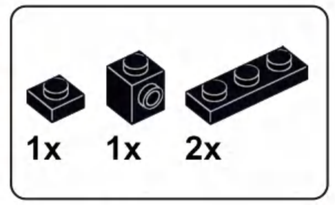

N23

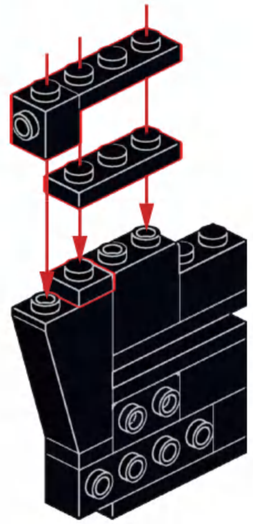

N24

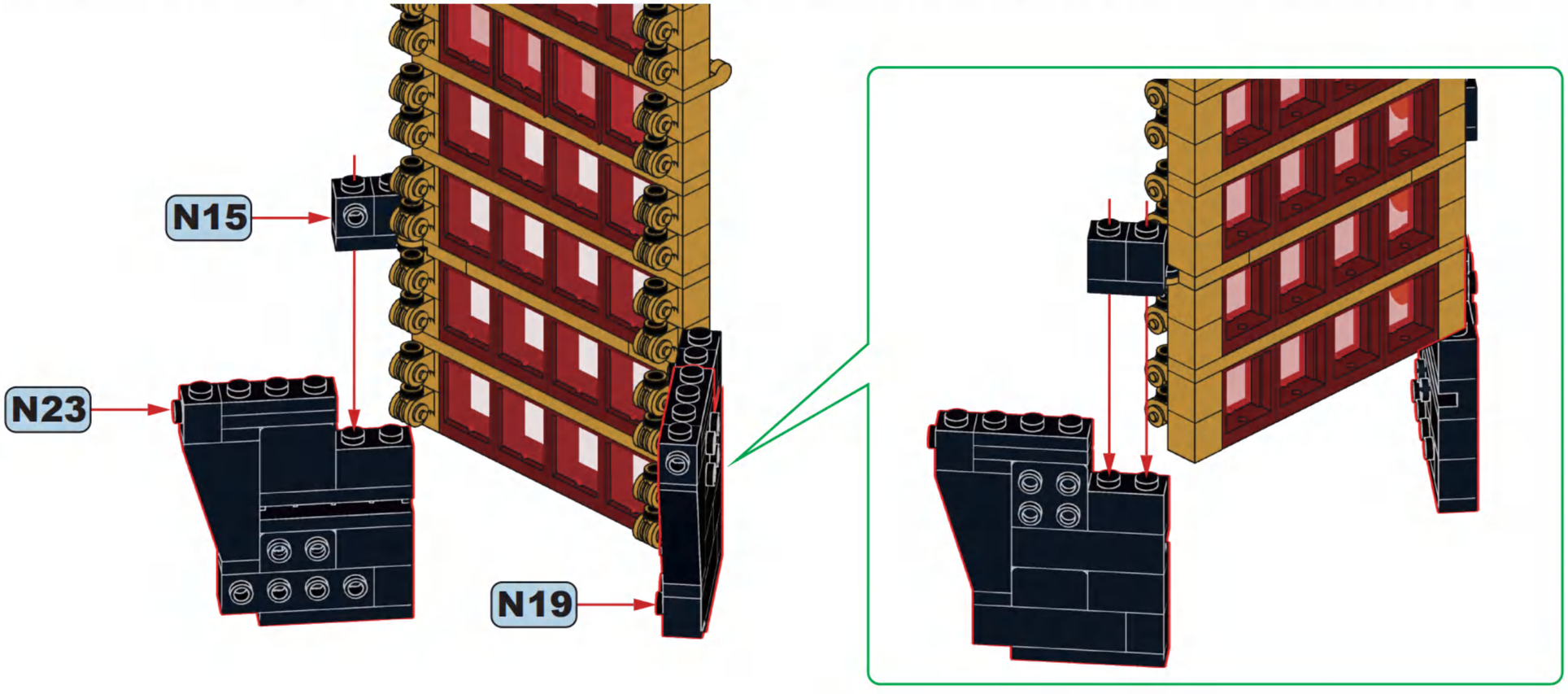

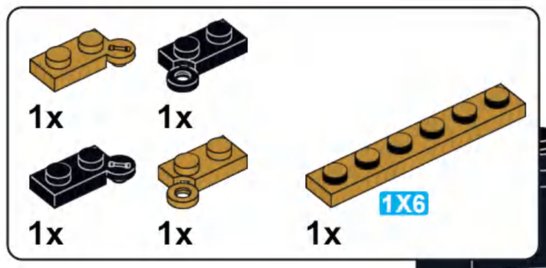

N25

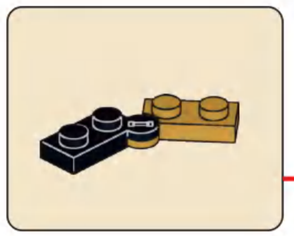

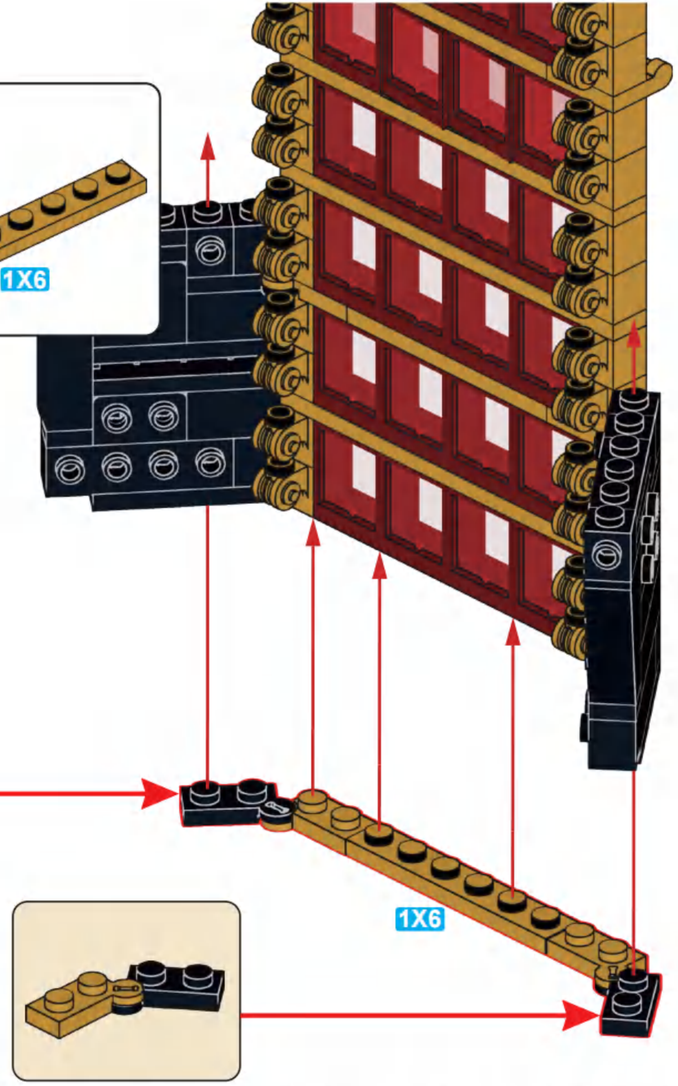

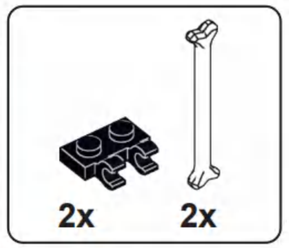

N26

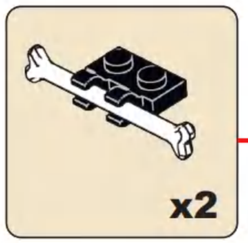

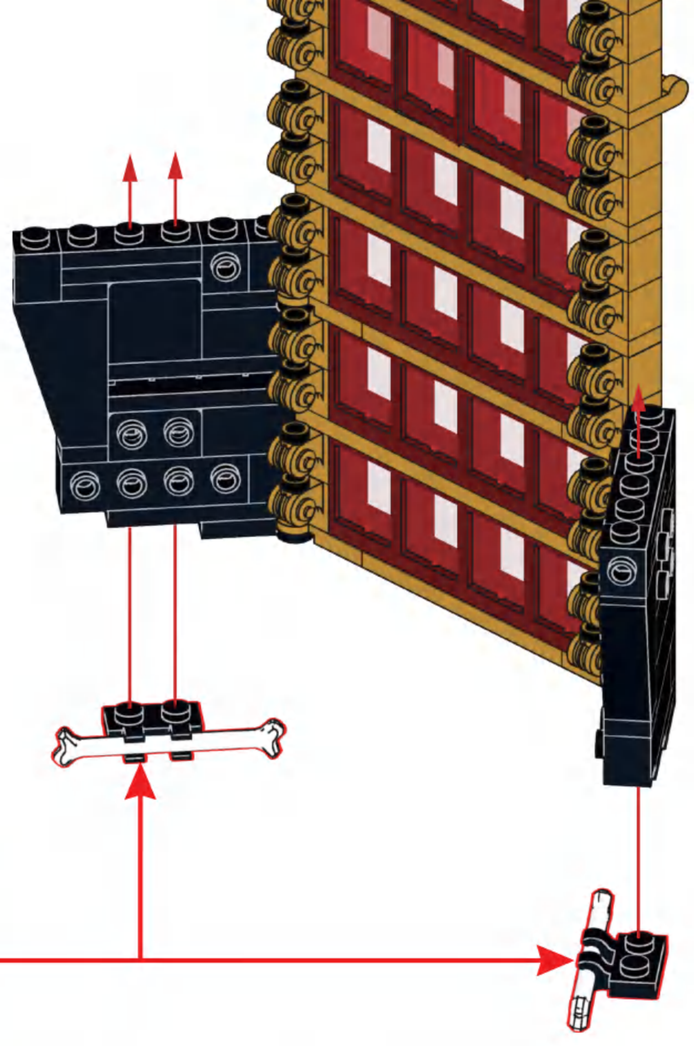

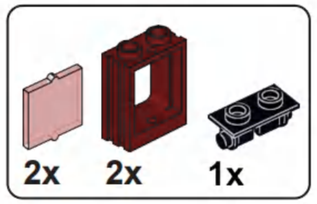

N27

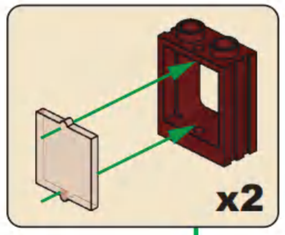

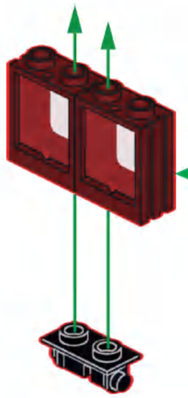

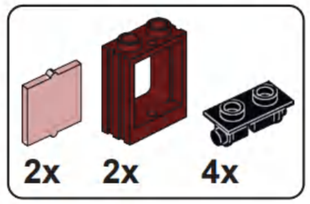

N28

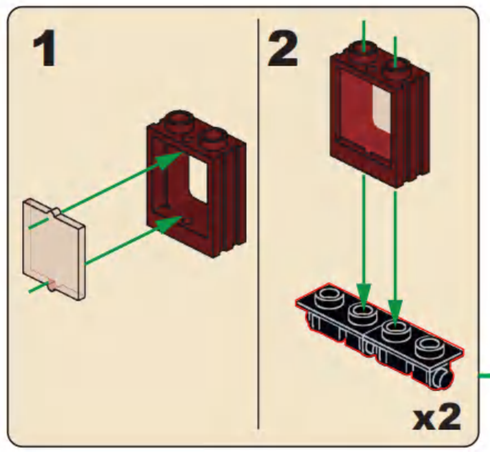

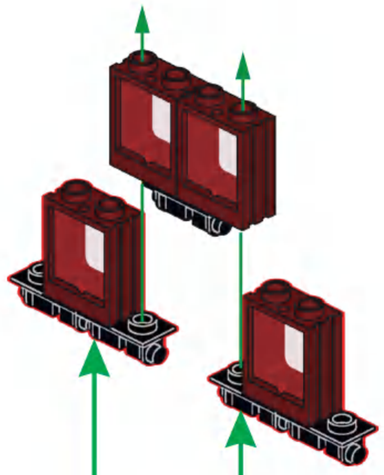

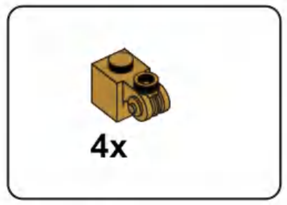

N29

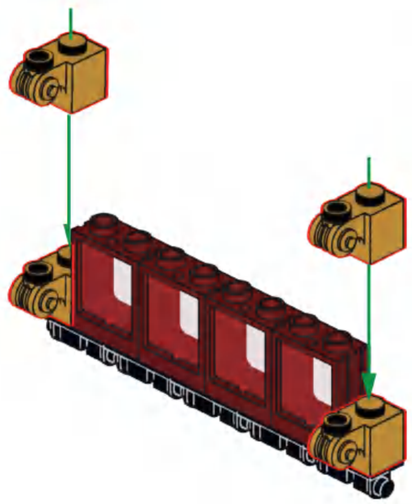

N30

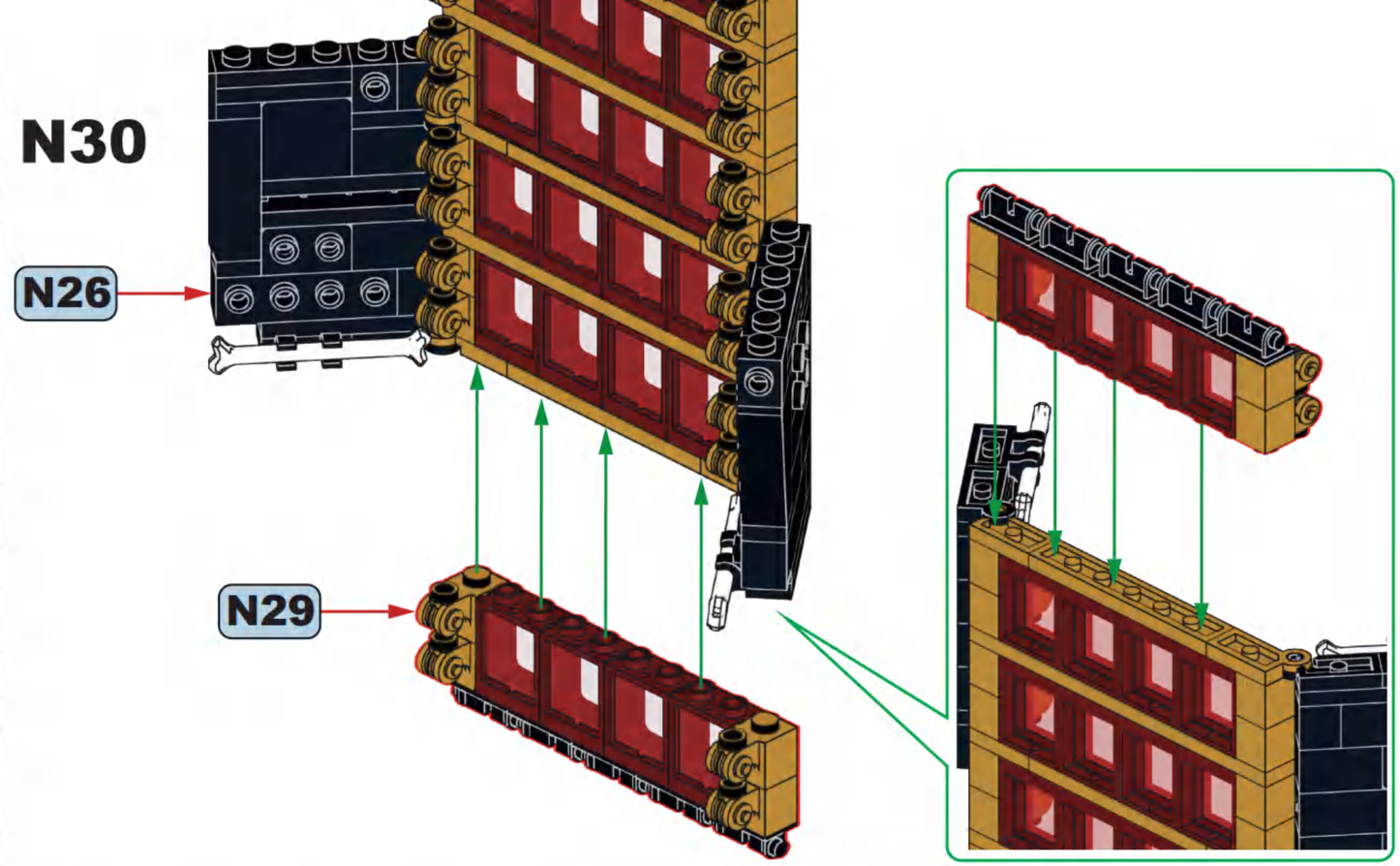

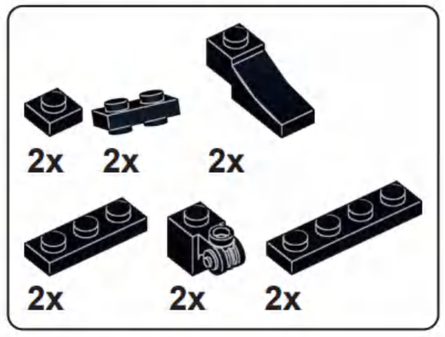

N31

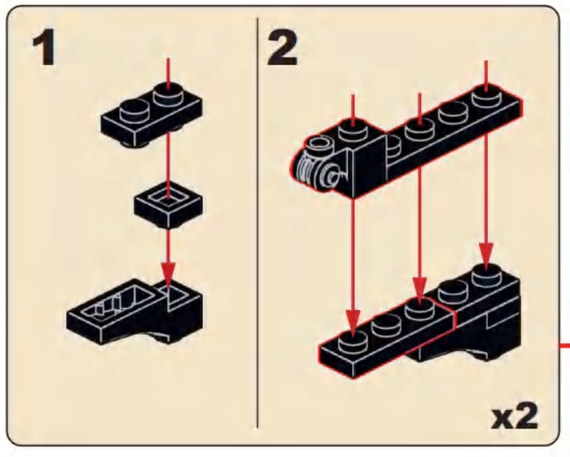

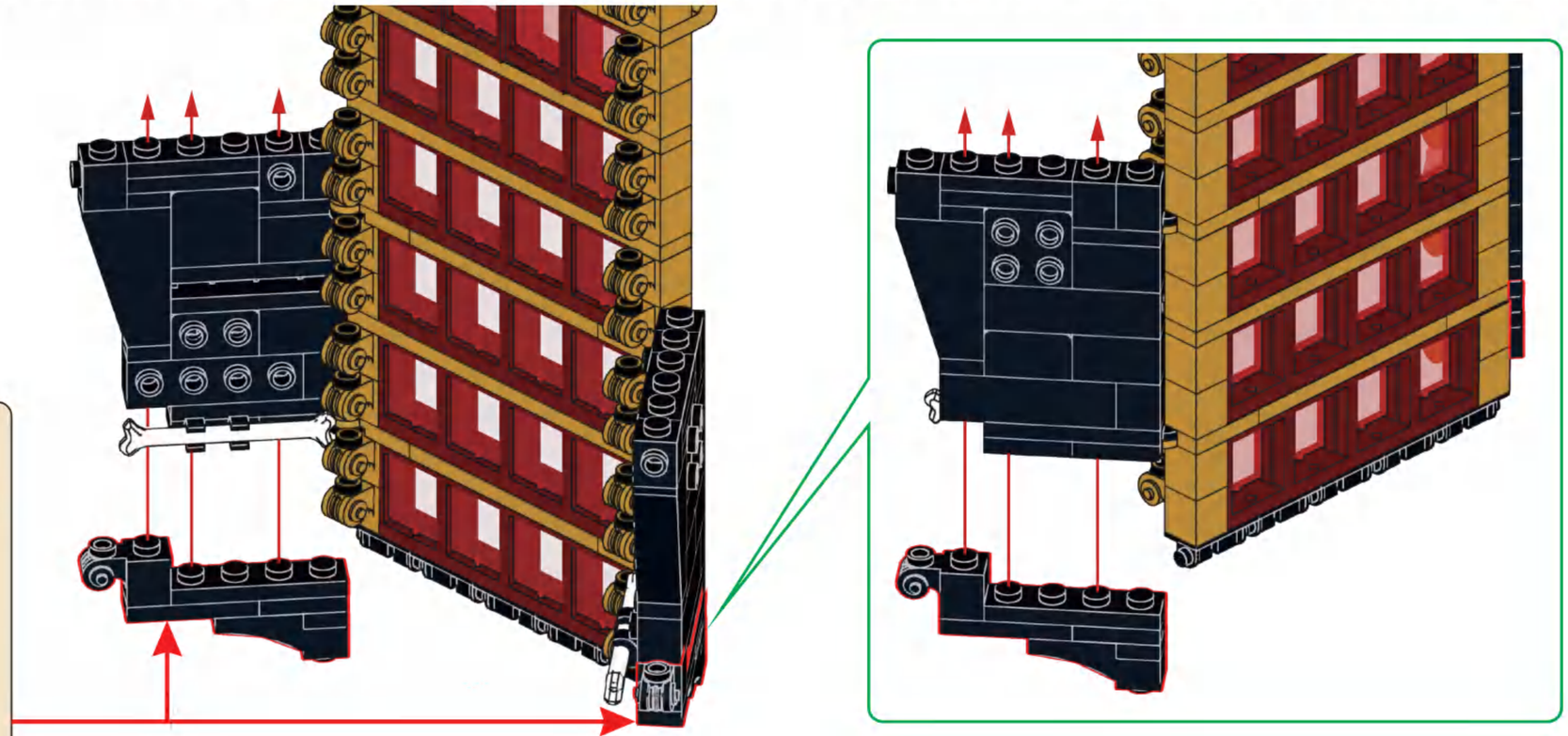

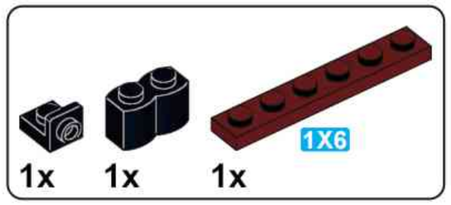

N32

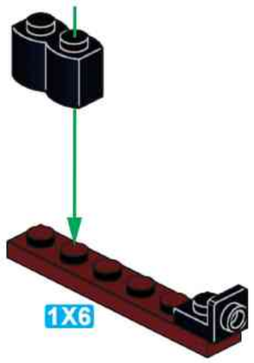

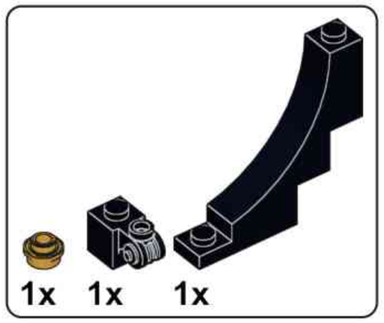

N33

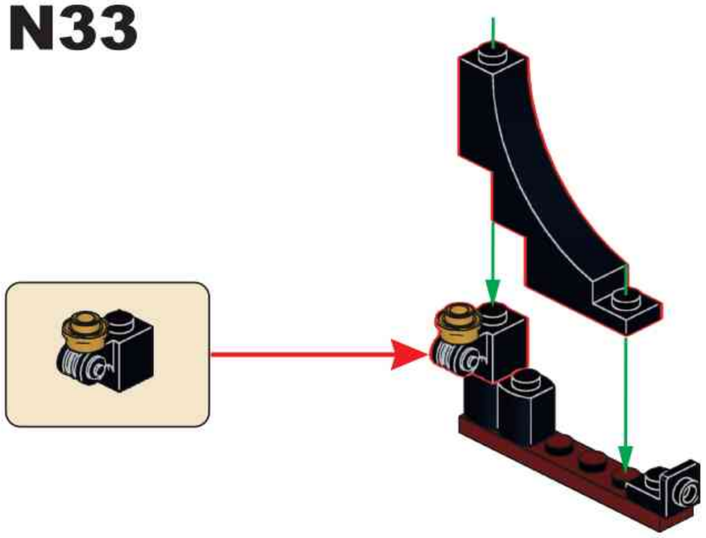

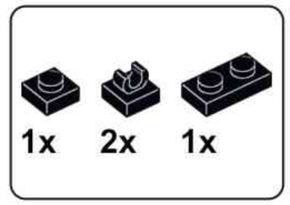

N34

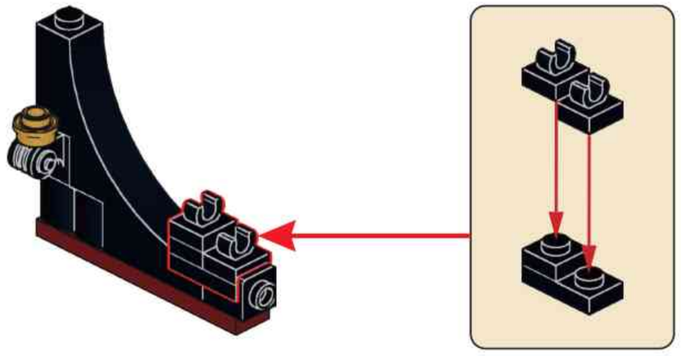

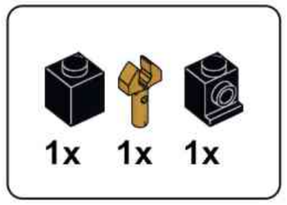

N35

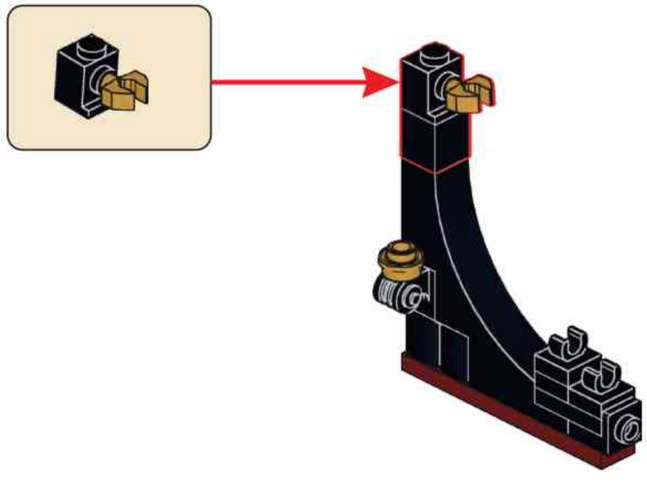

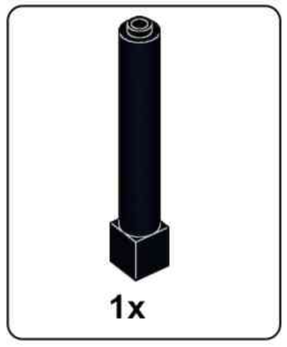

N36

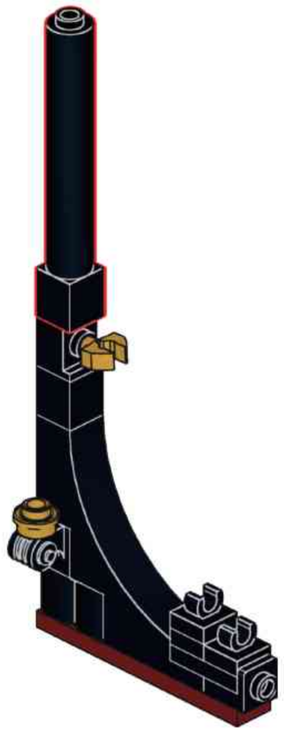

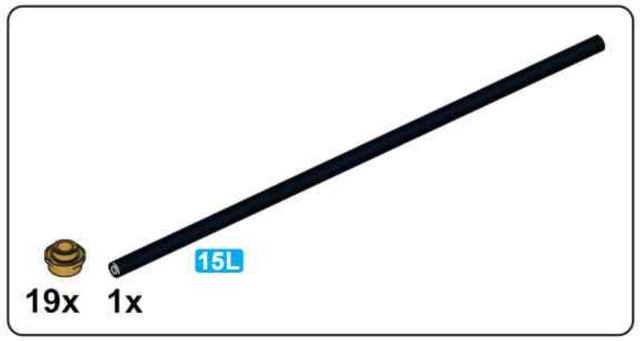

N37

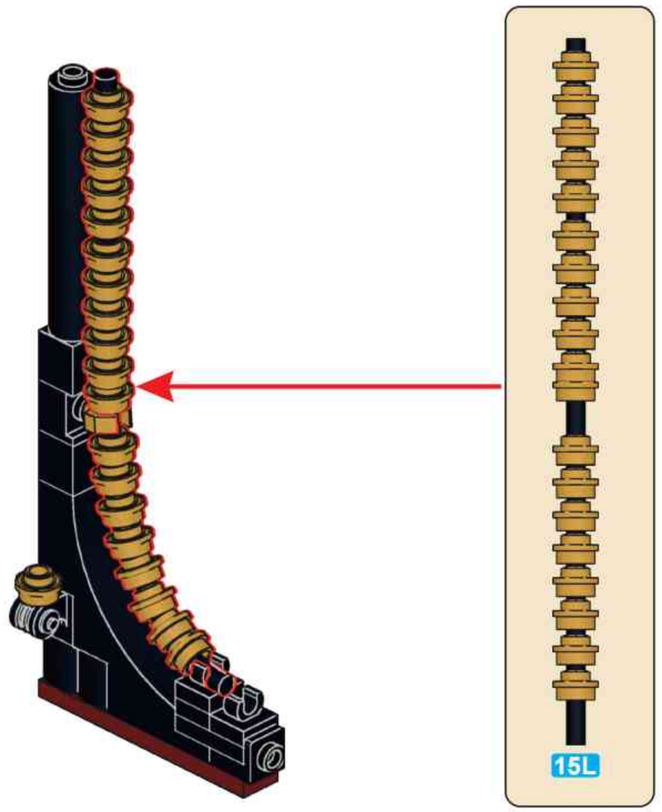

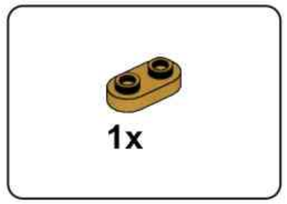

N38

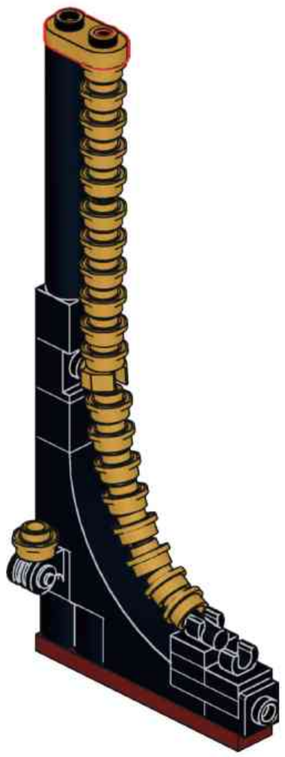

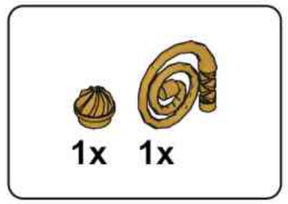

N39

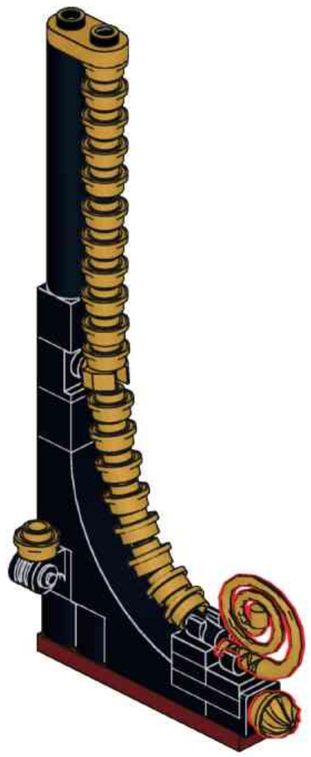

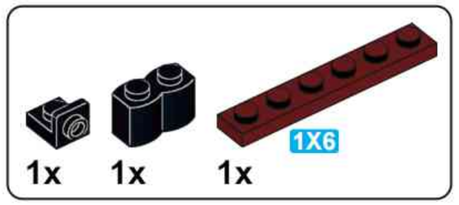

N40

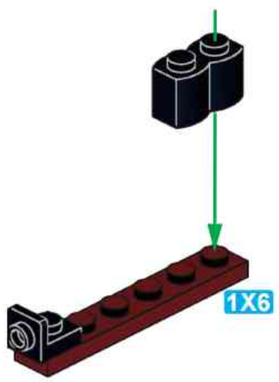

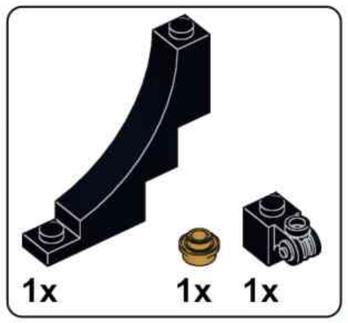

N41

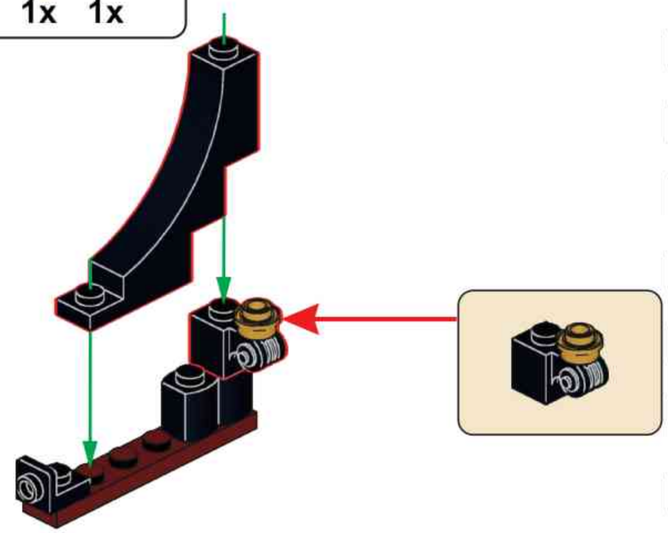

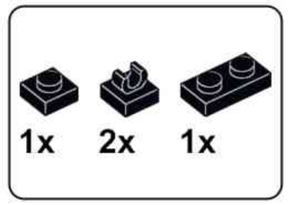

N42

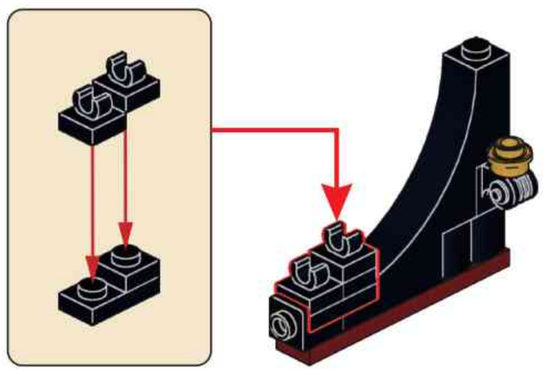

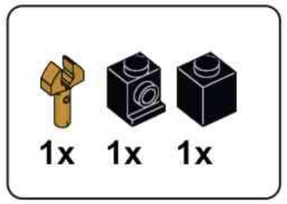

N43

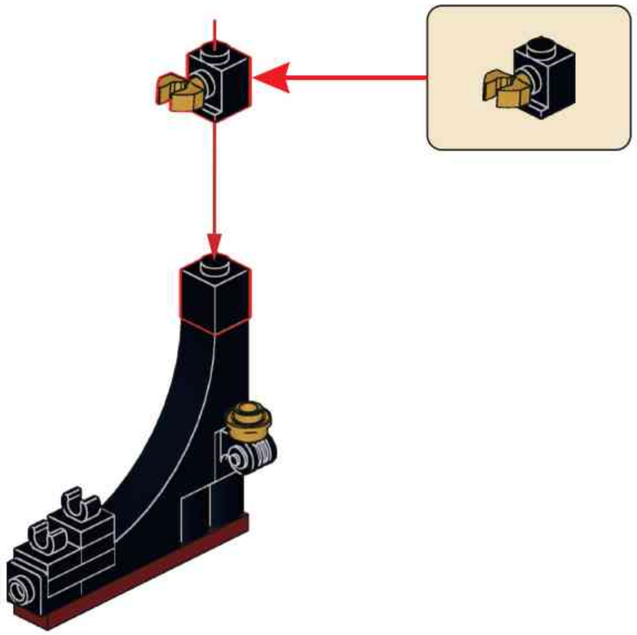

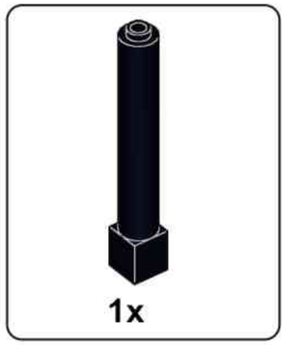

N44

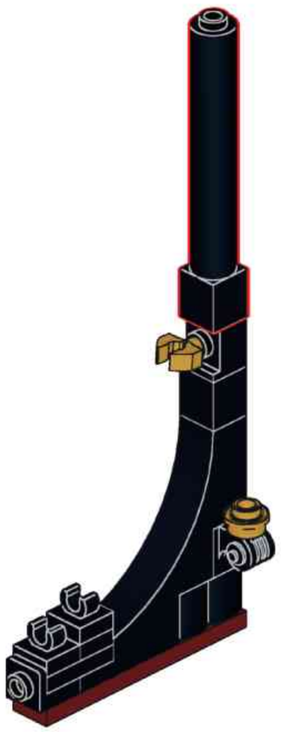

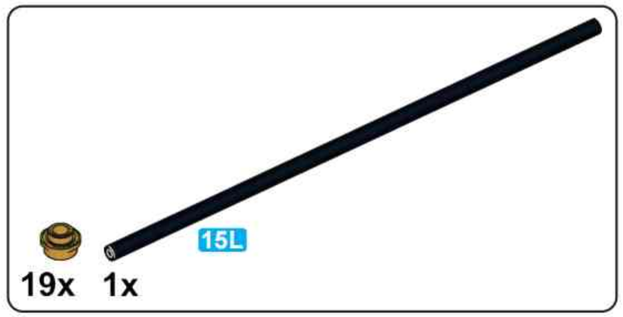

N45

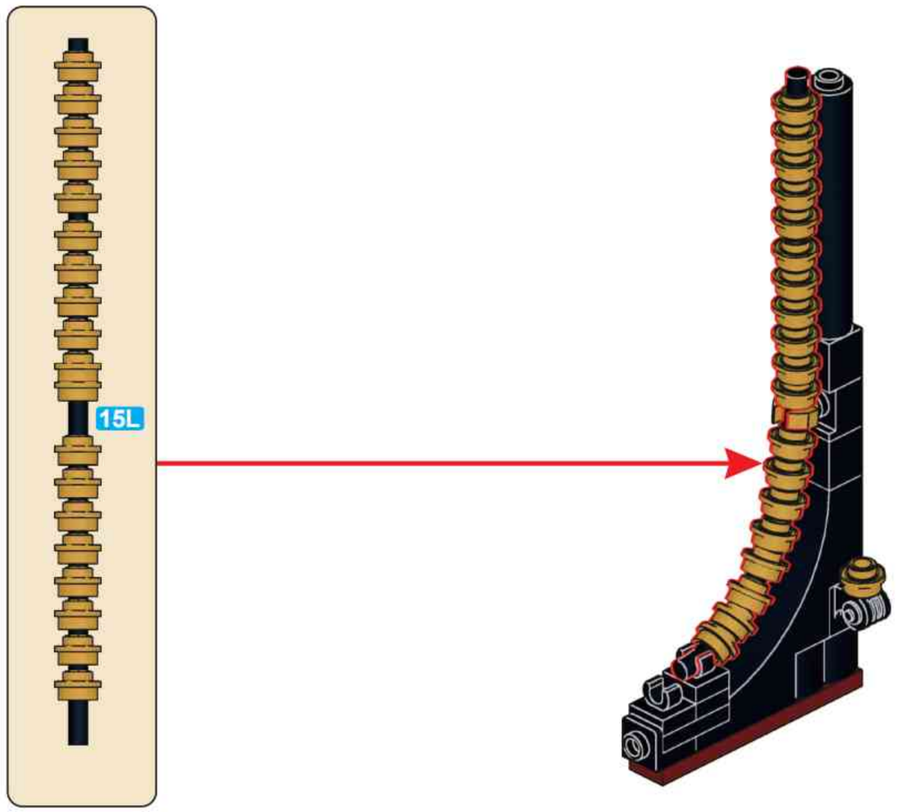

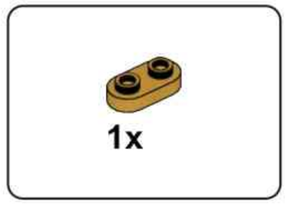

N46

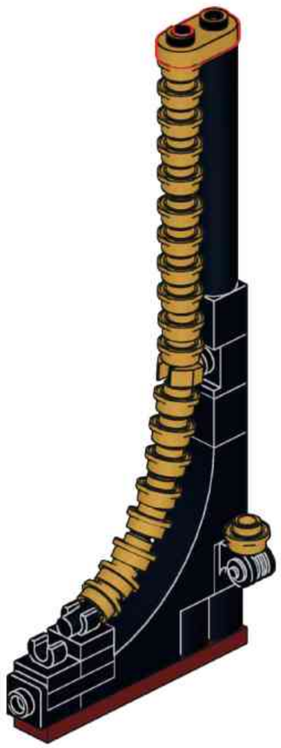

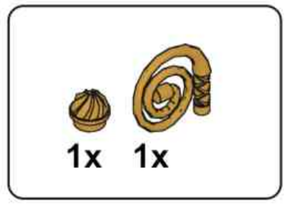

N47

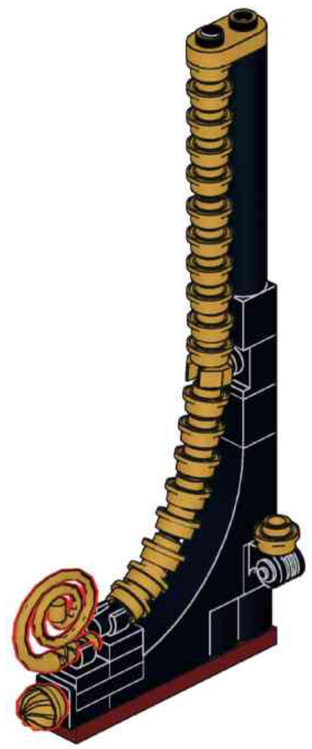

N48

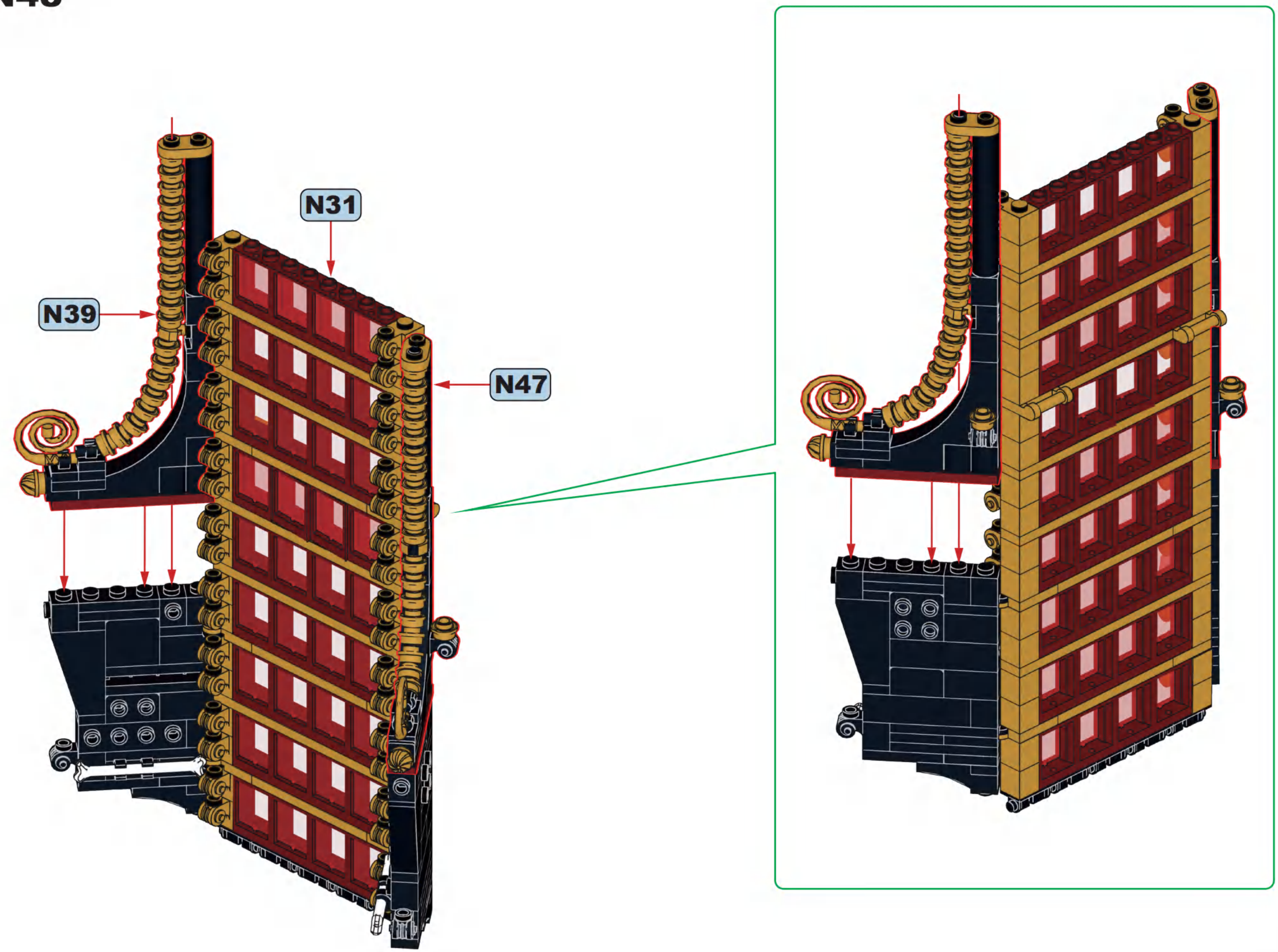

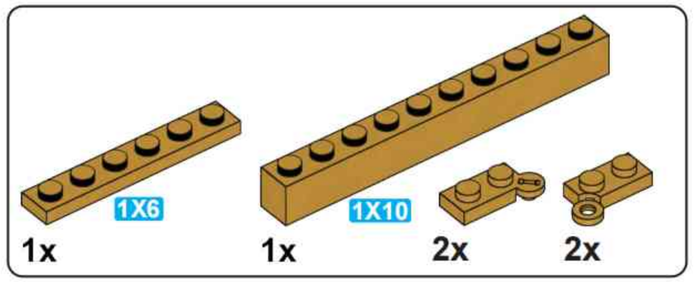

N49

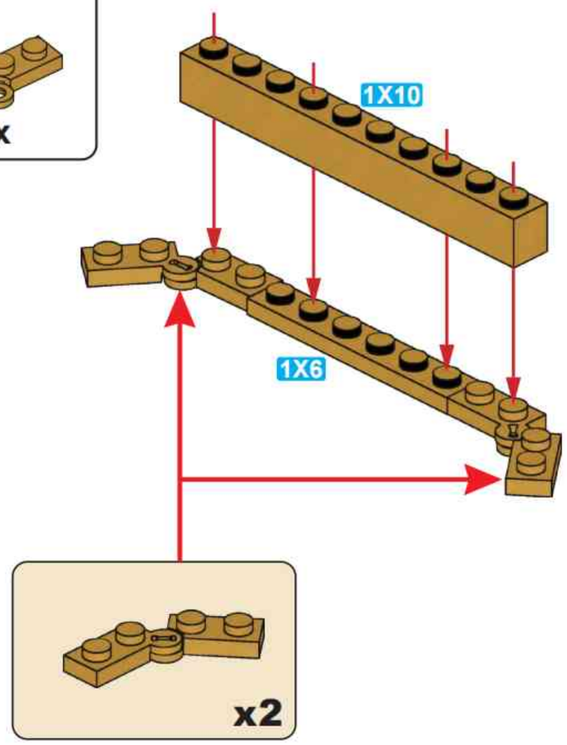

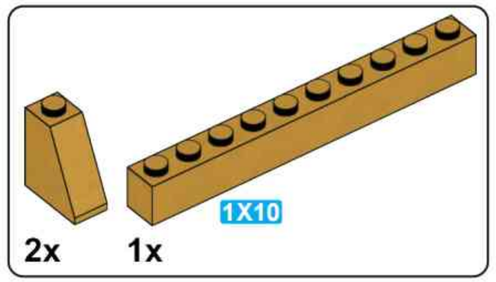

N50

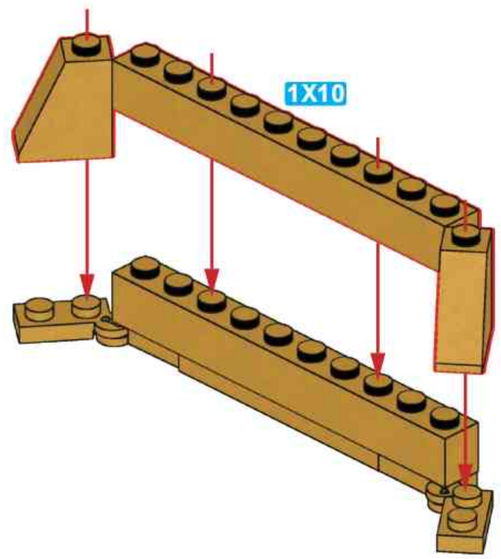

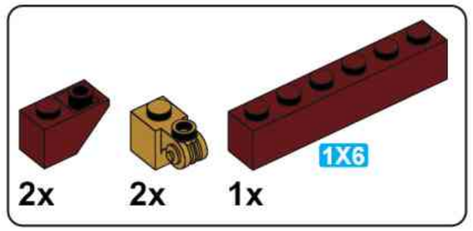

N51

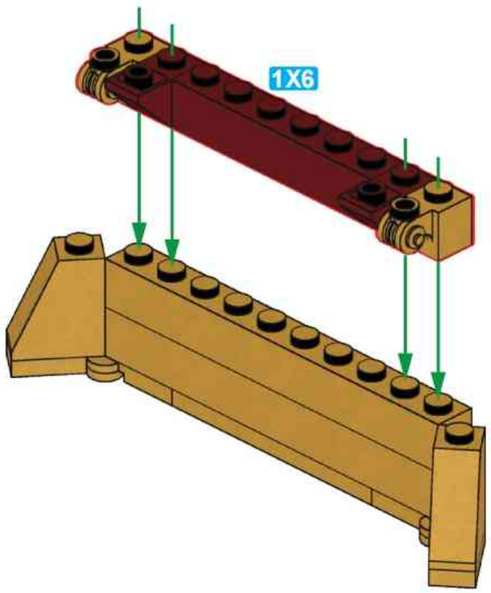

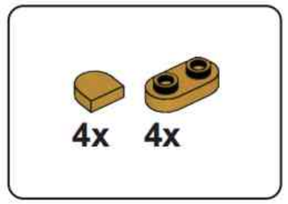

N52

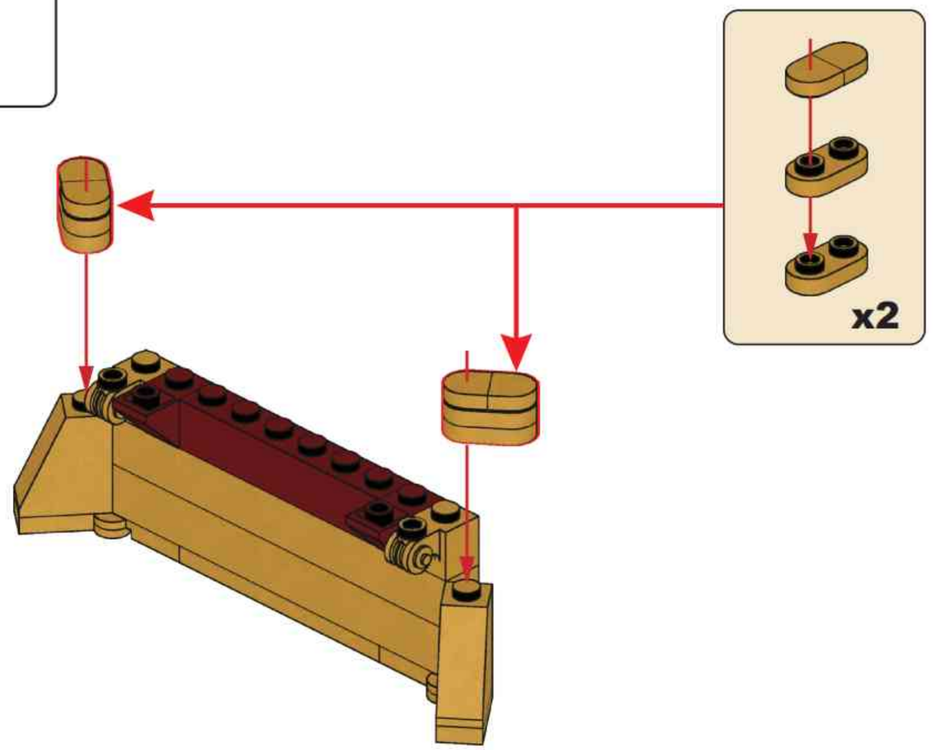

N53

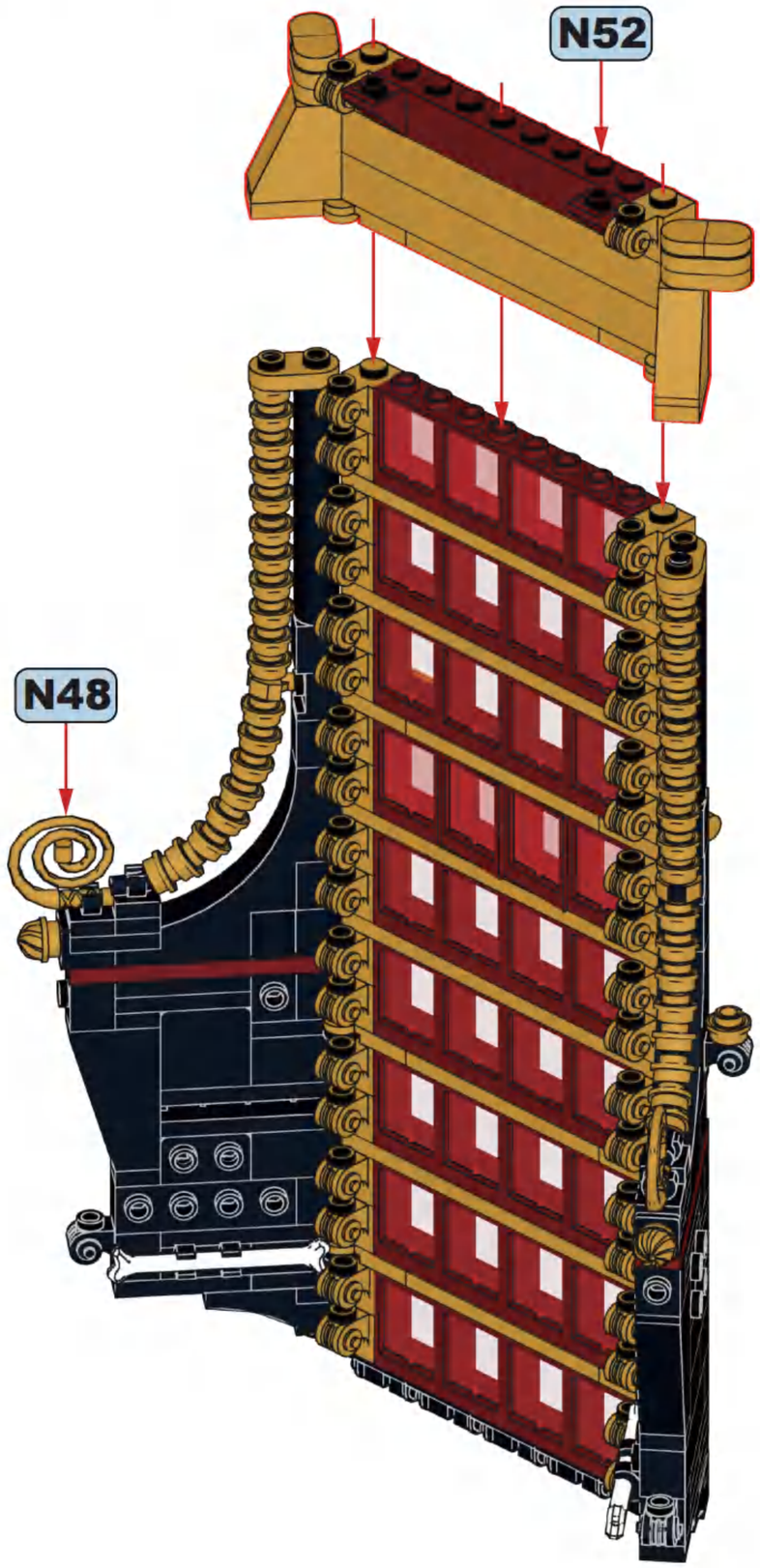

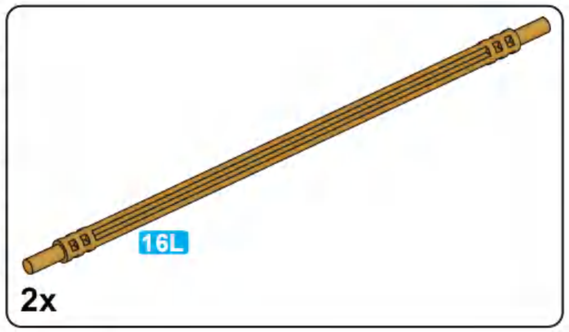

N54

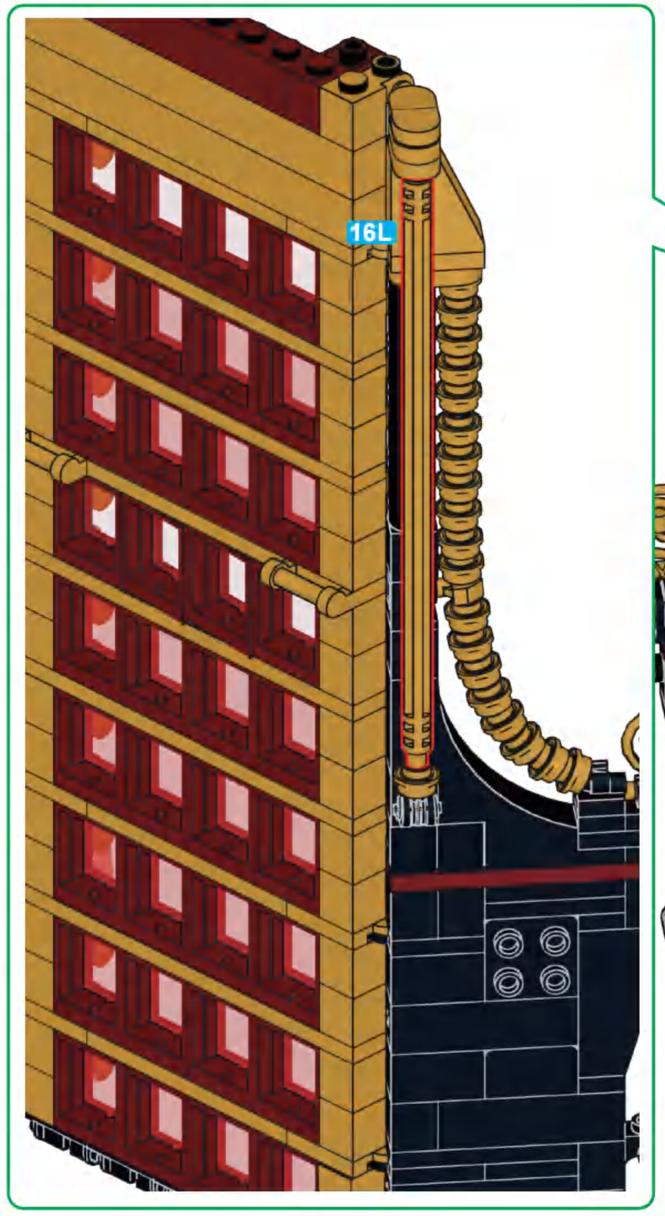

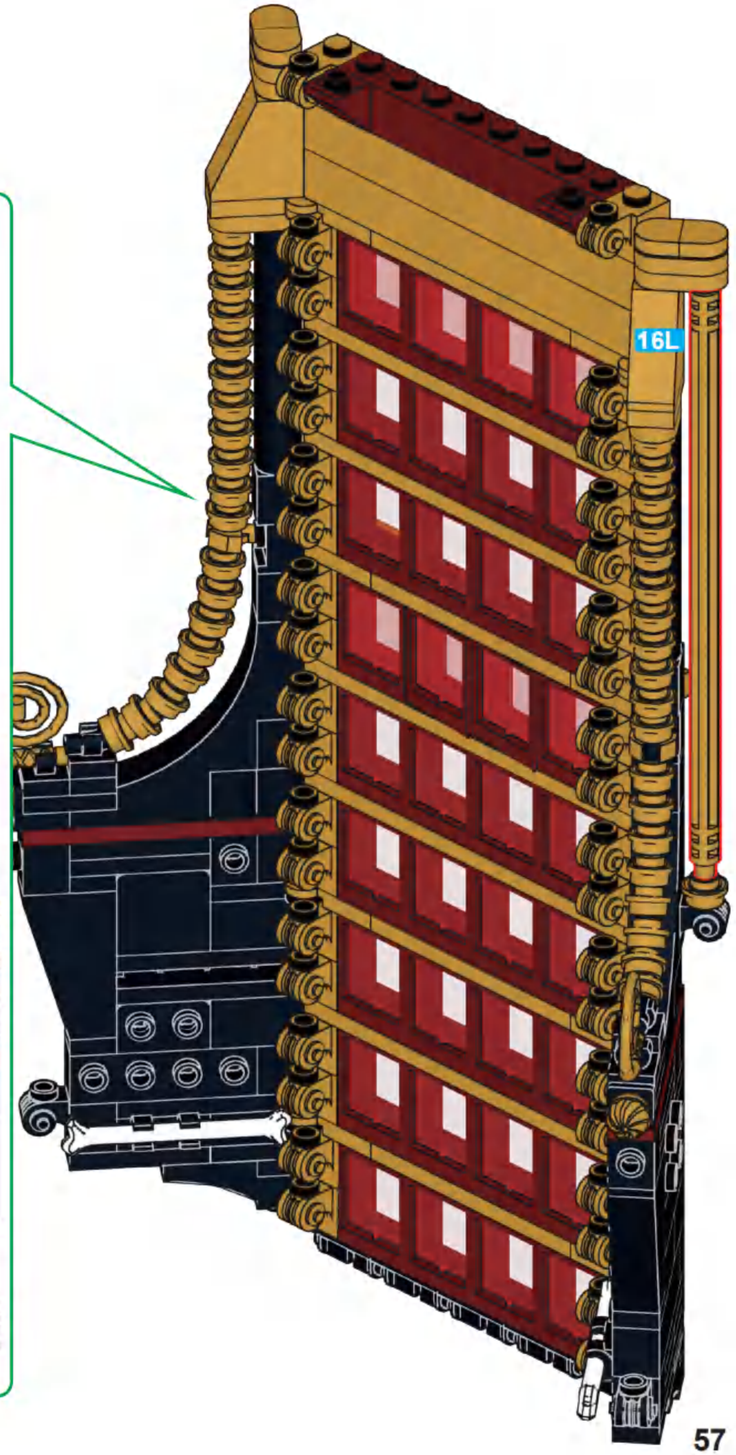

O

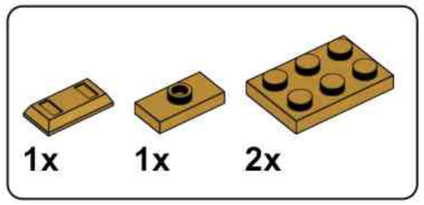

01

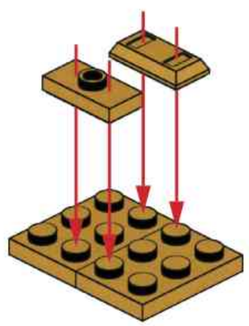

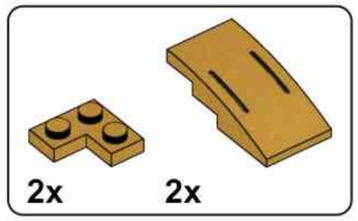

02

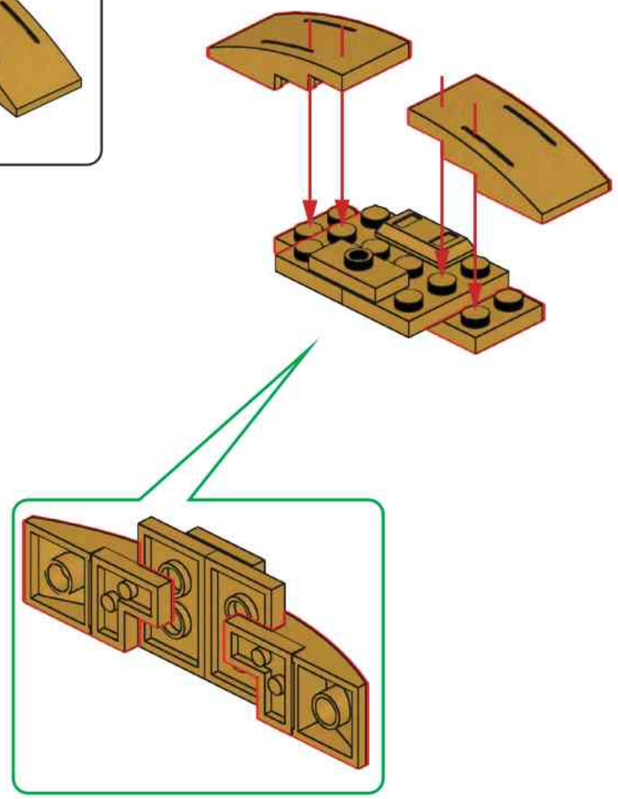

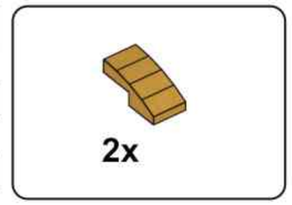

03

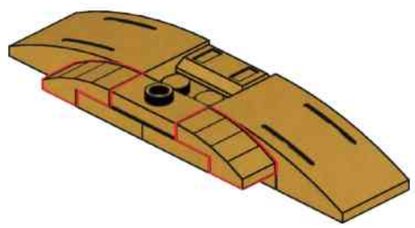

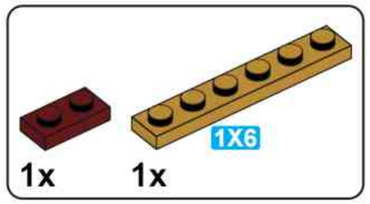

04

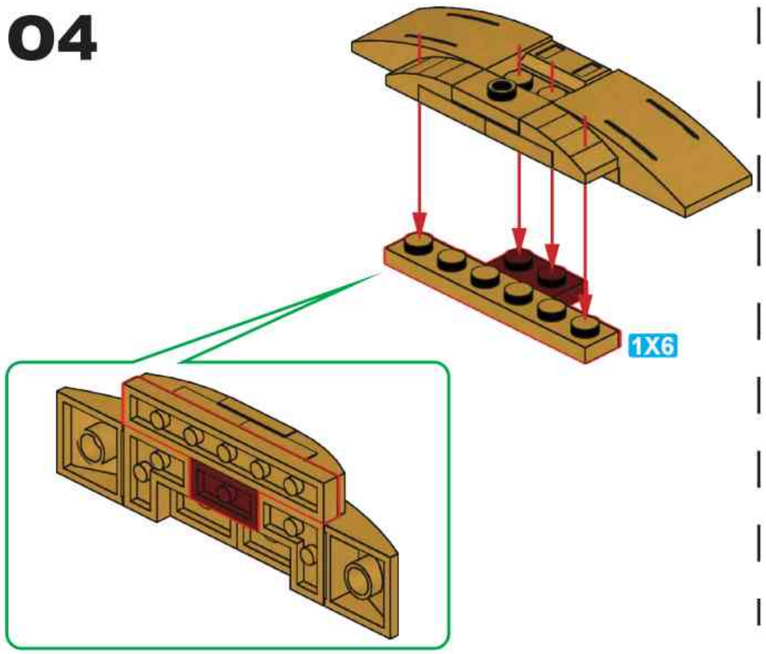

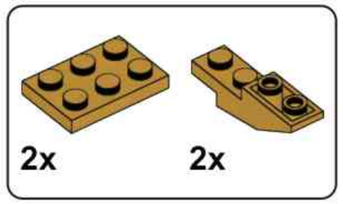

05

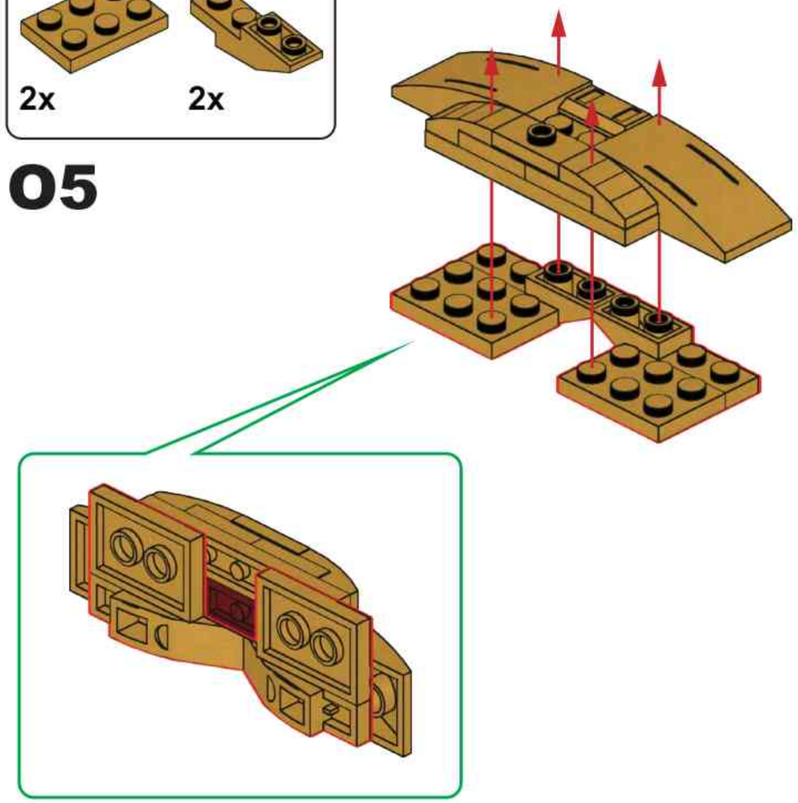

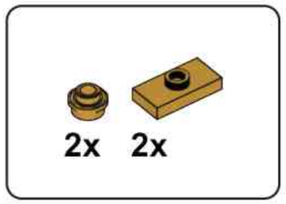

06

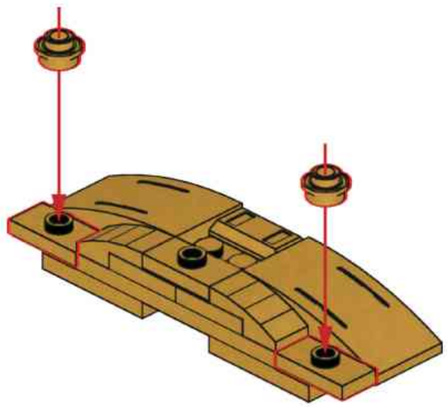

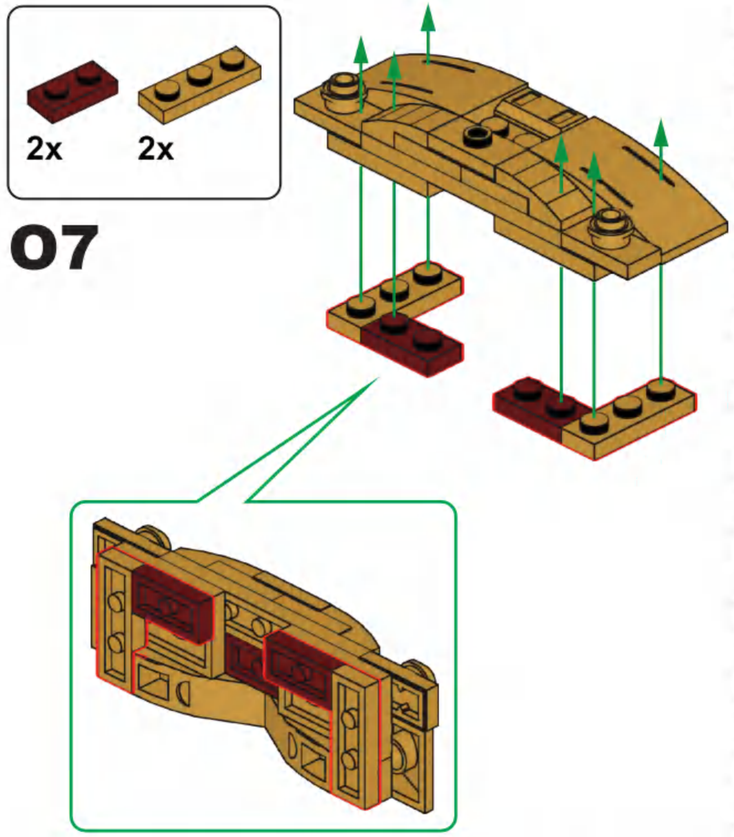

07

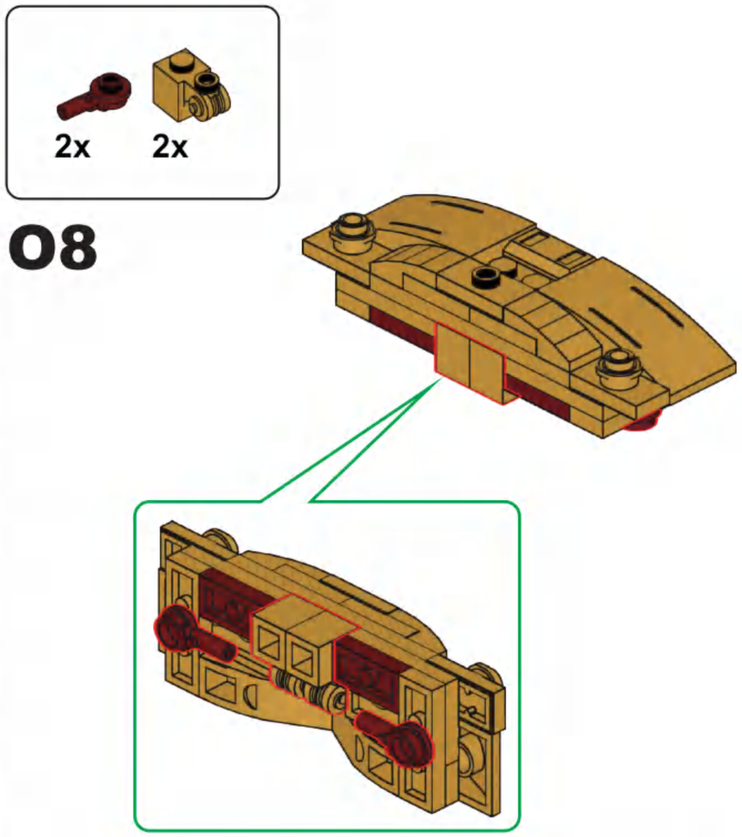

08

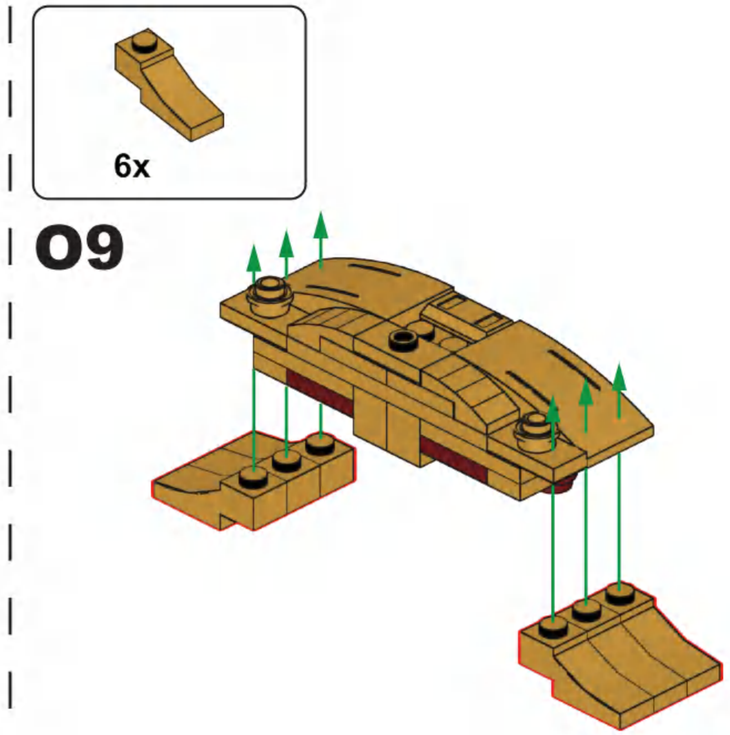

09

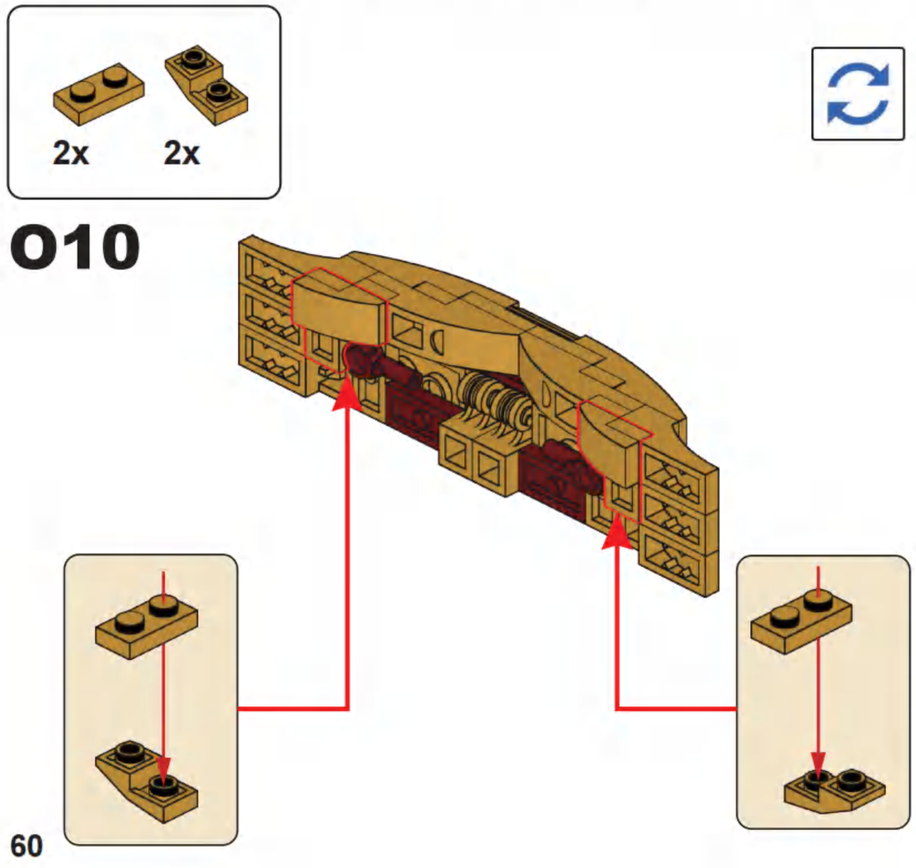

010

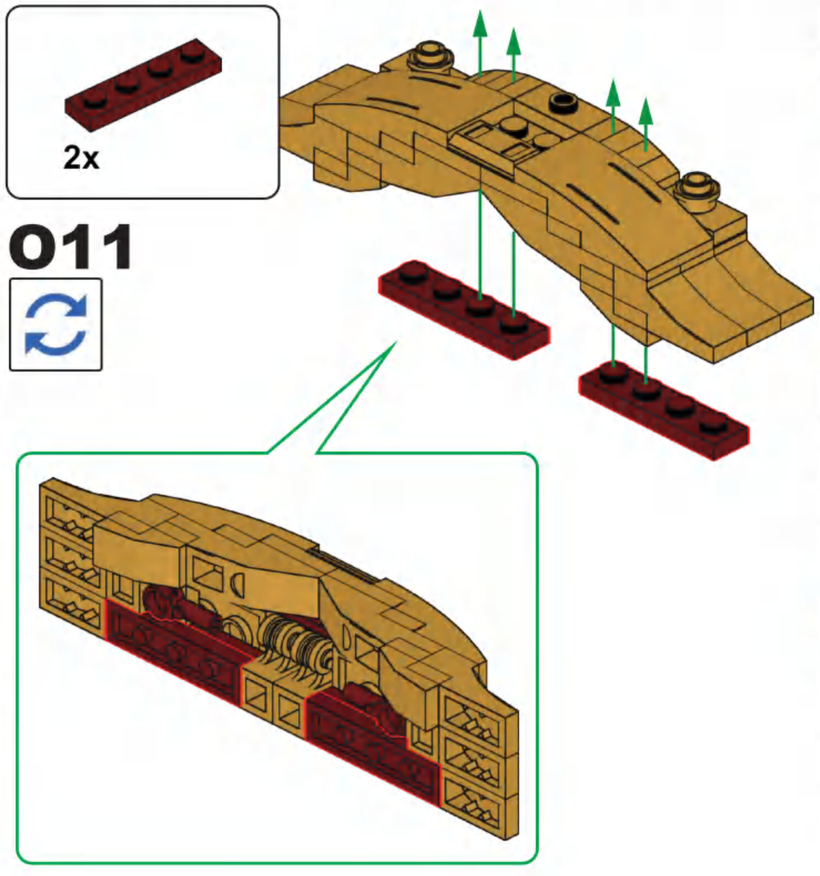

011

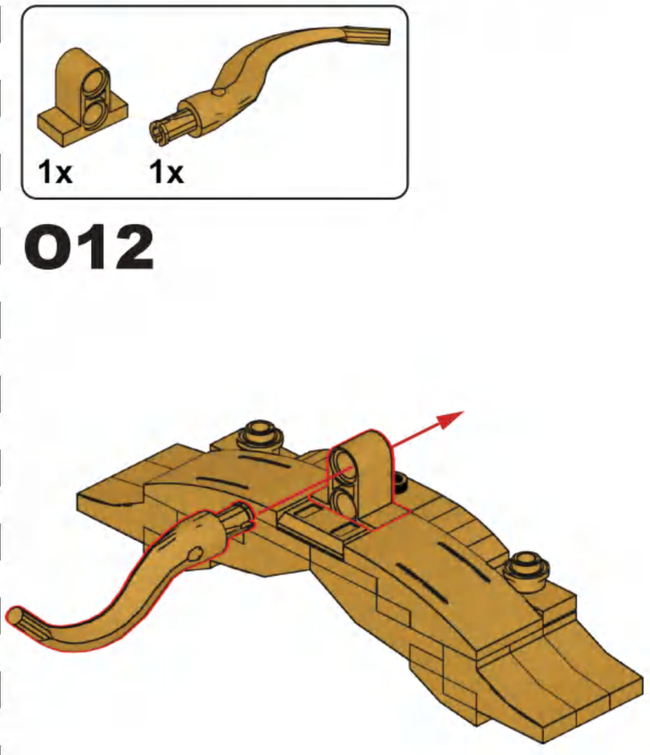

012

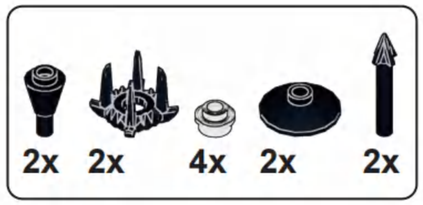

O13

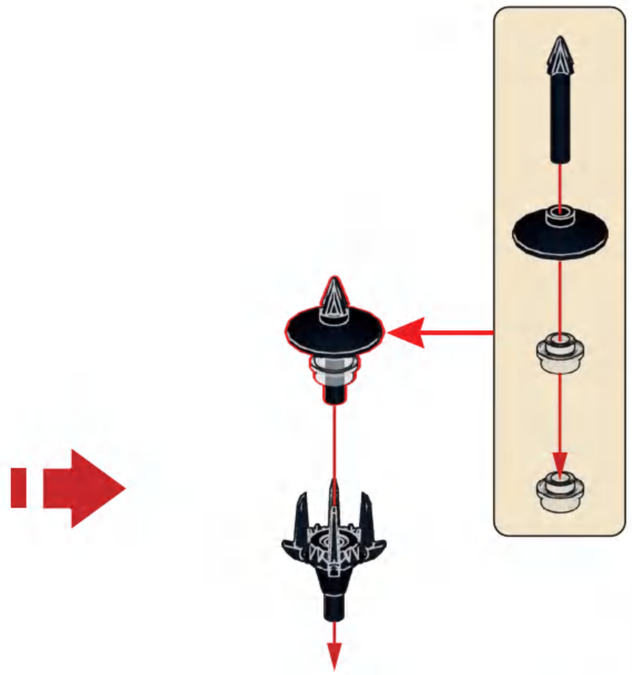

x2

O14

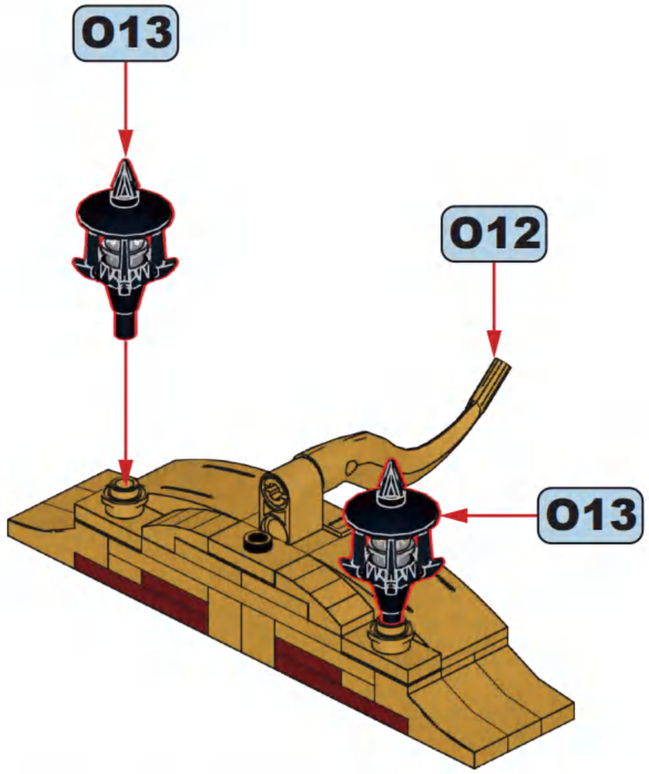

O15

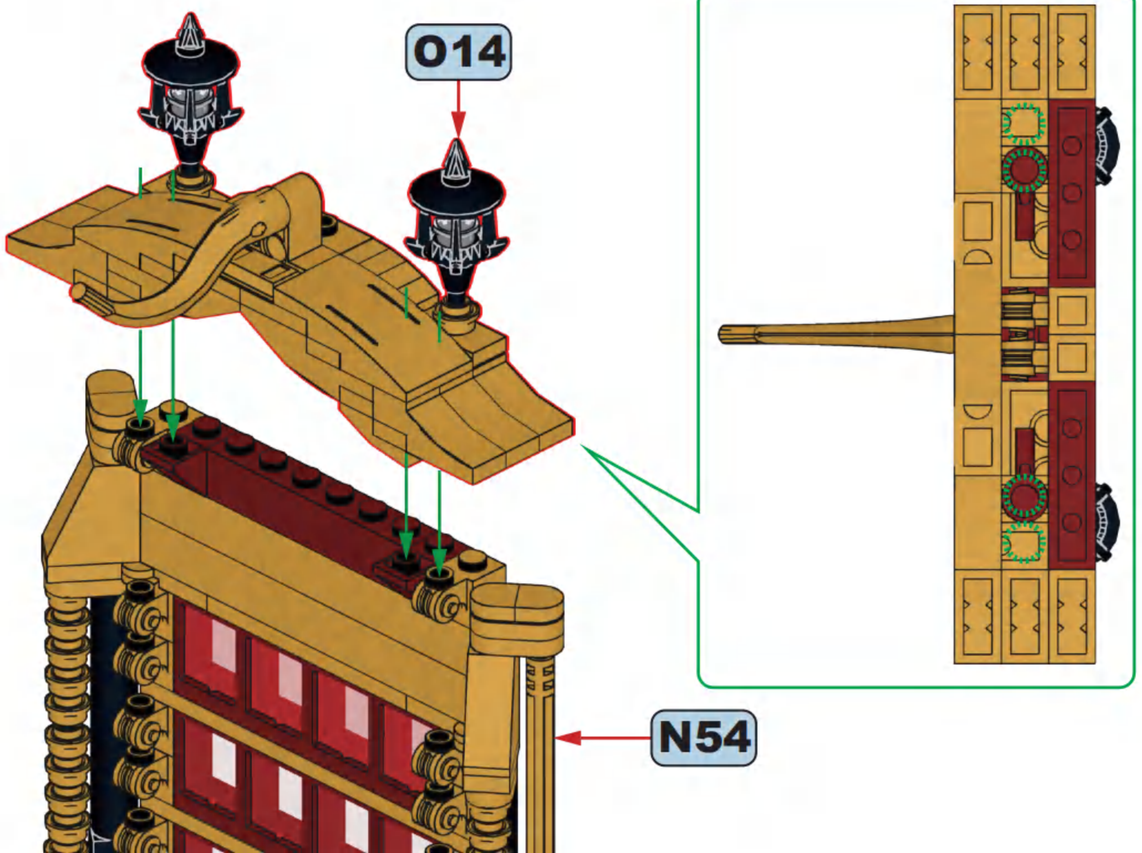

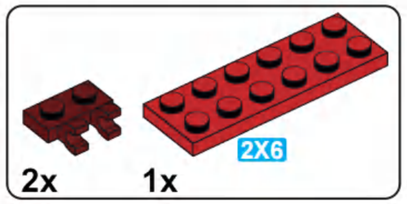

O16

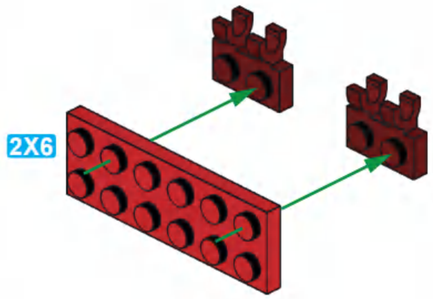

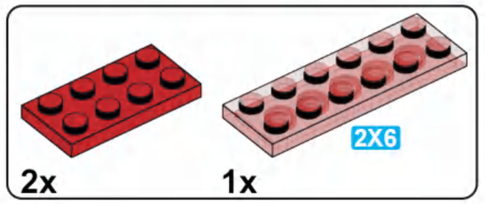

O17

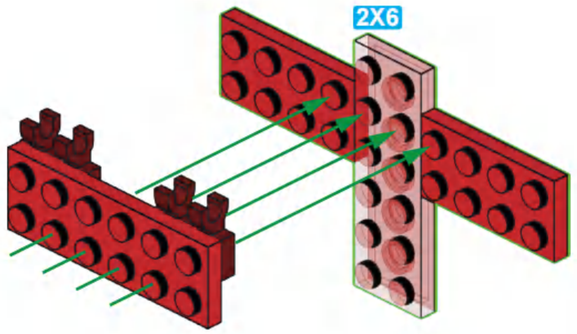

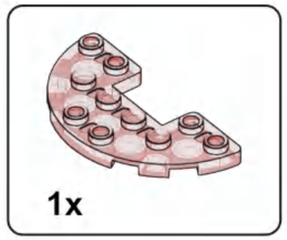

O18

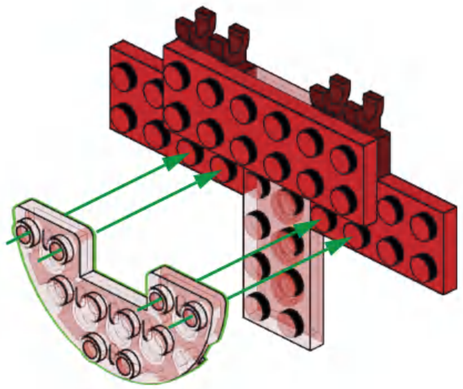

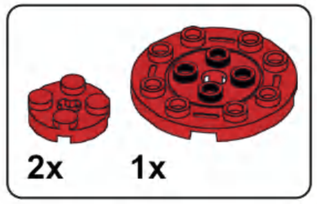

O19

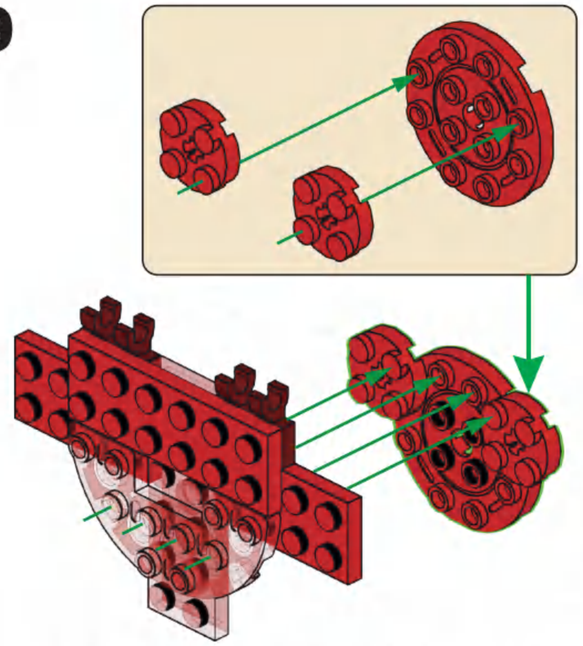

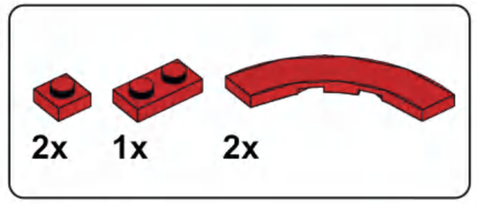

O20

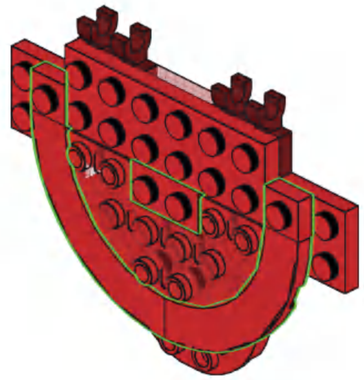

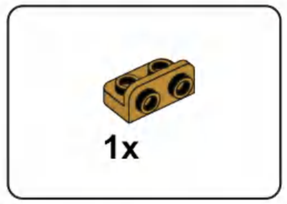

O21

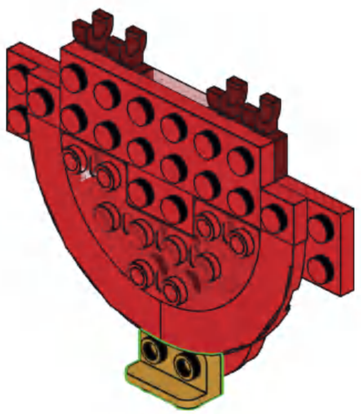

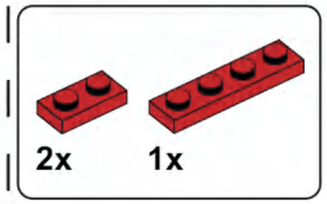

O21

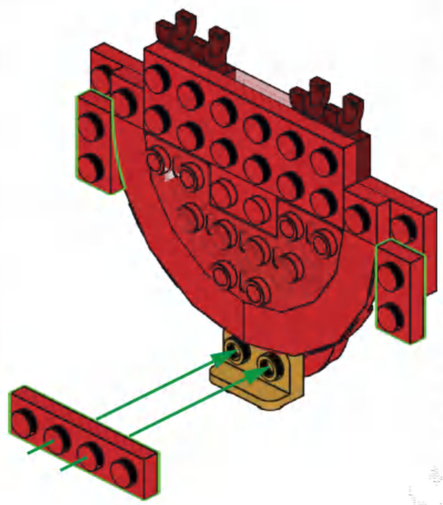

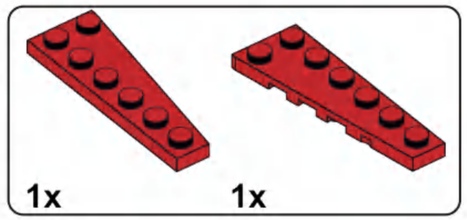

O23

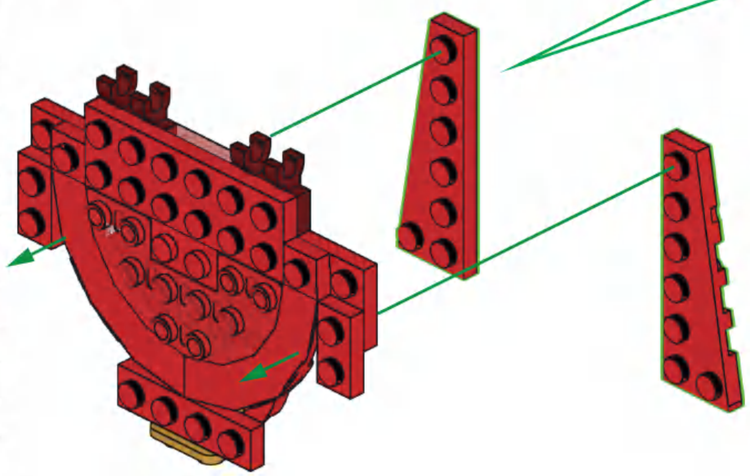

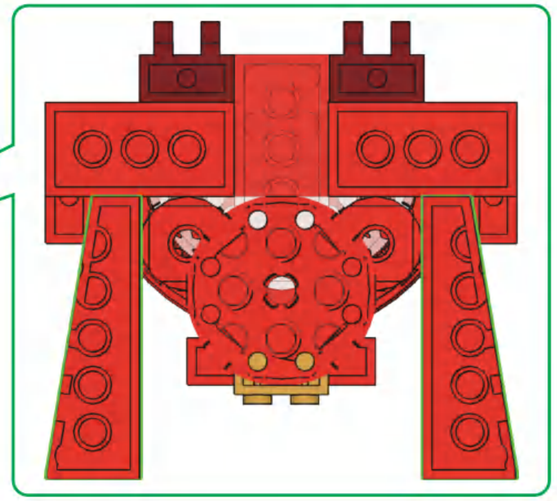

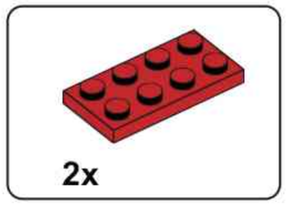

024

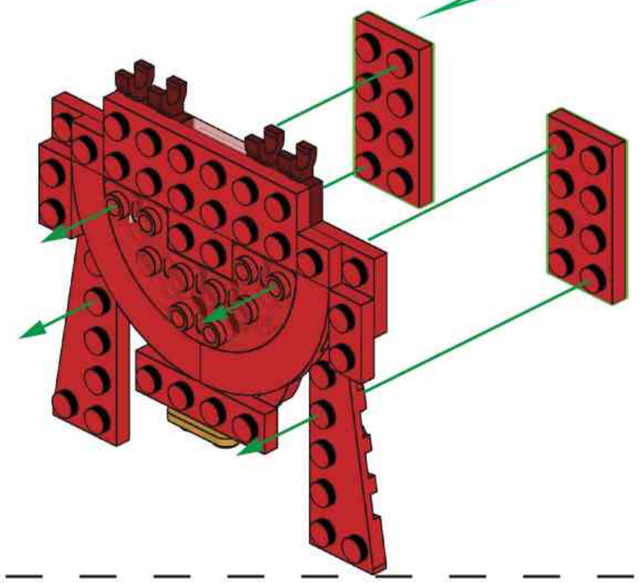

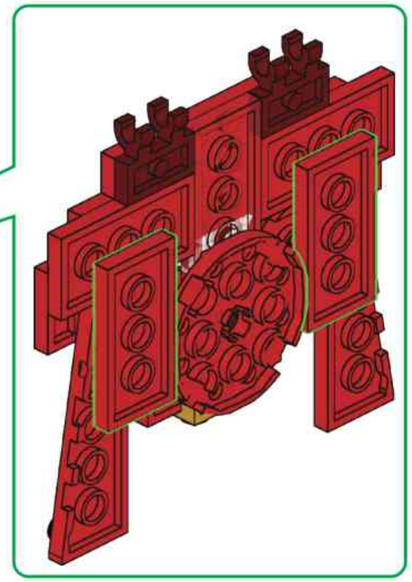

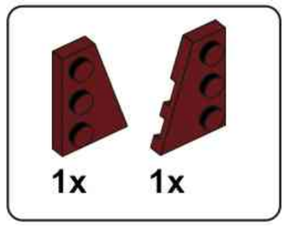

025

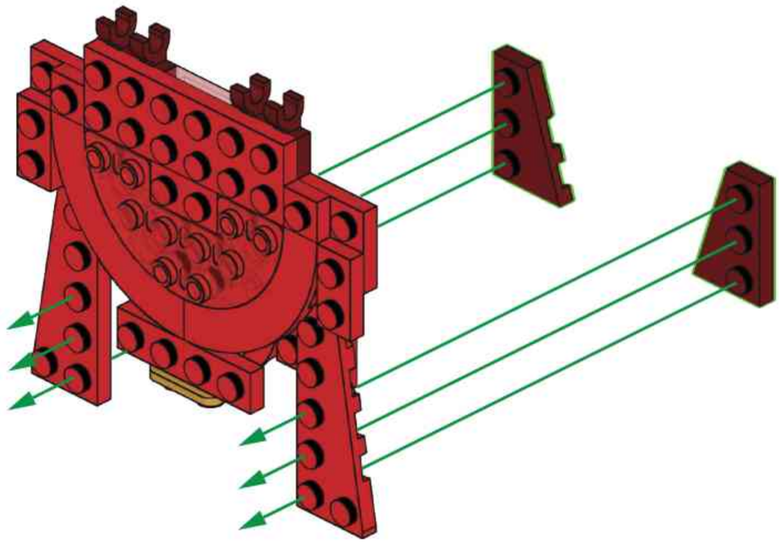

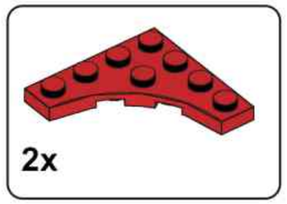

026

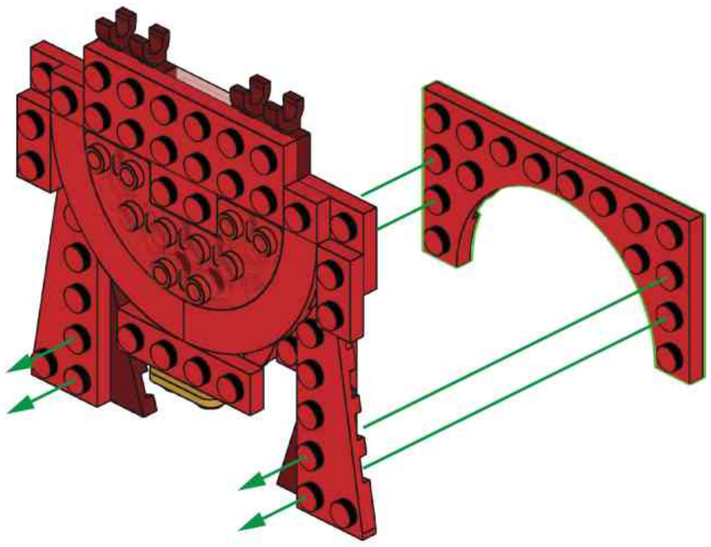

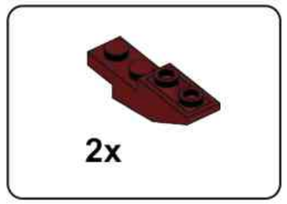

027

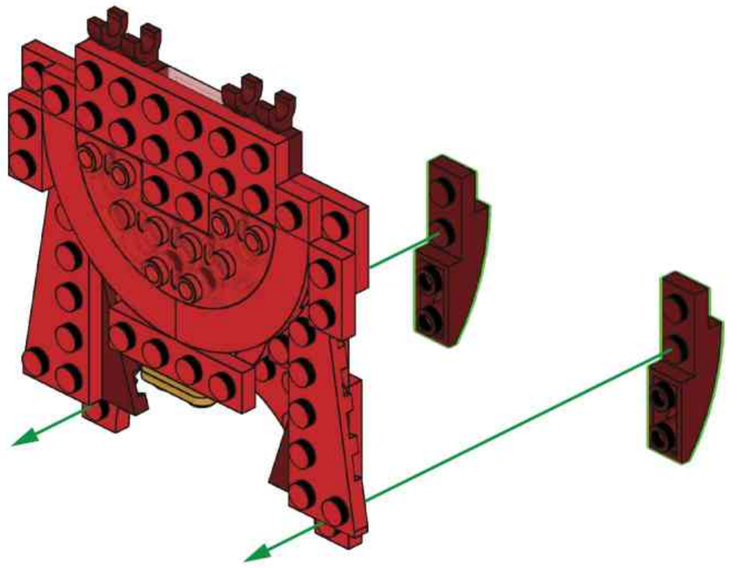

028

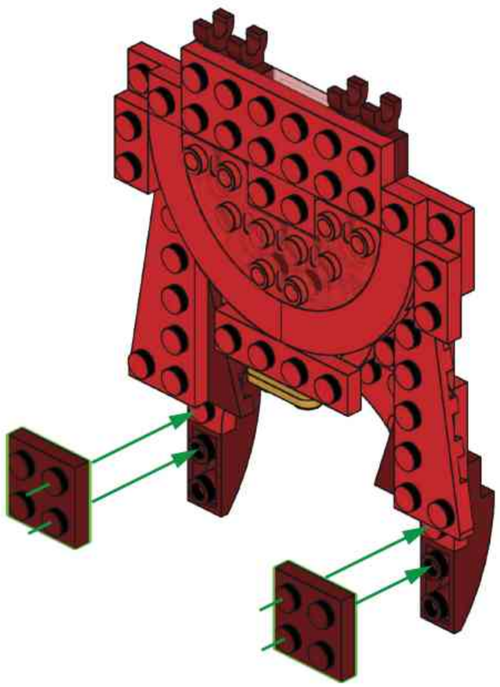

029

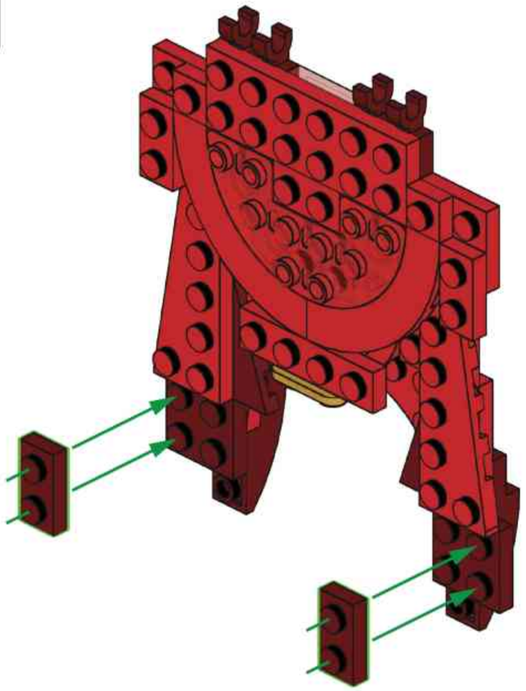

030

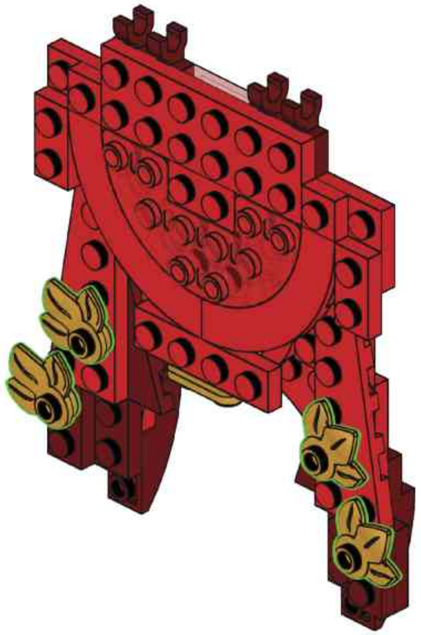

031

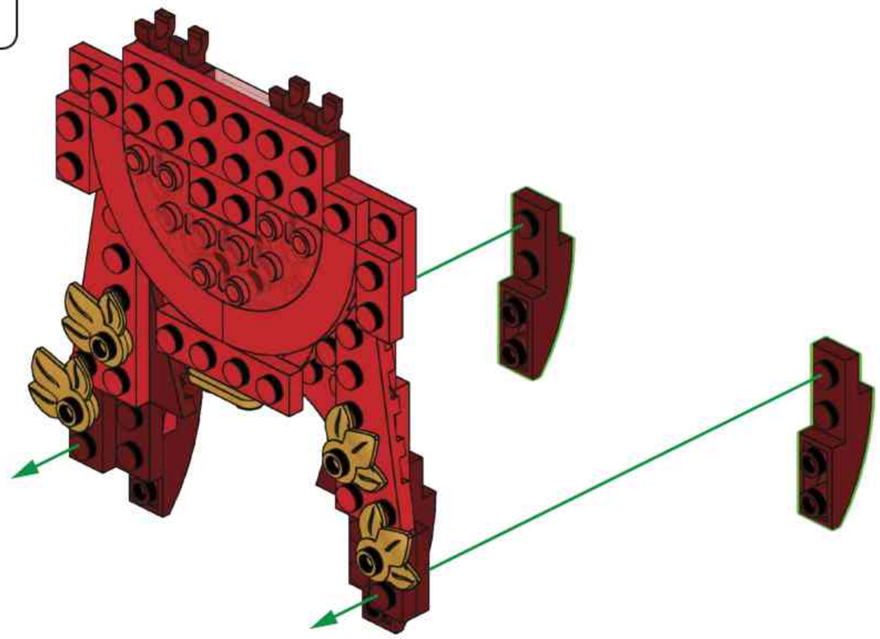

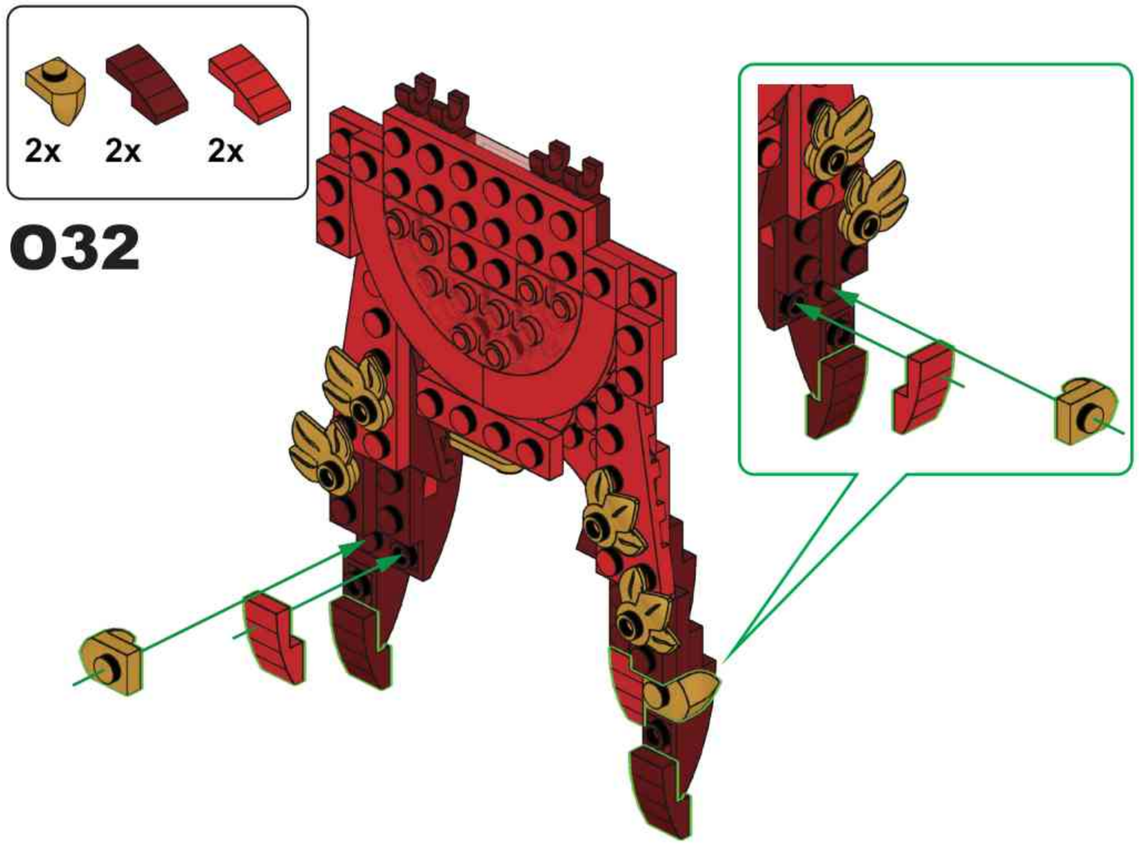

032

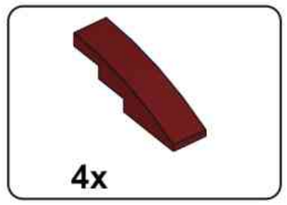

033

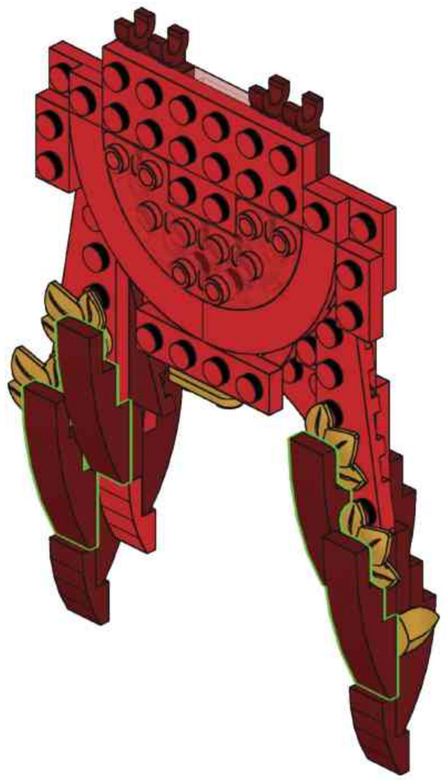

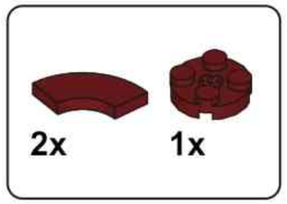

034

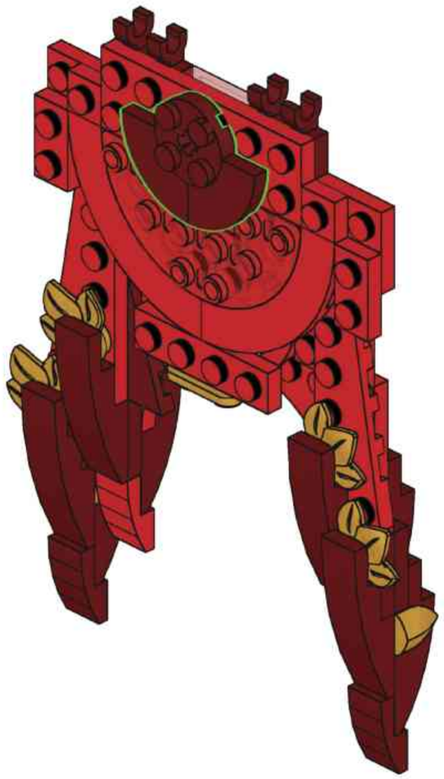

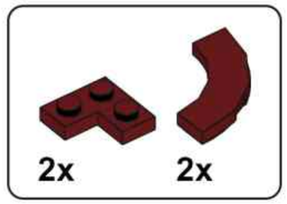

035

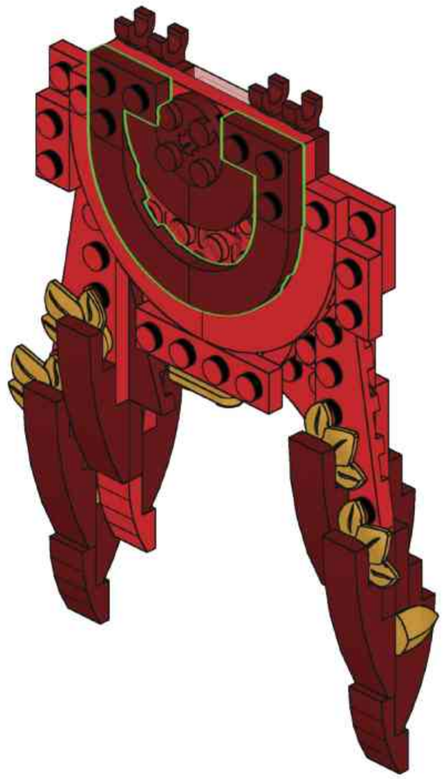

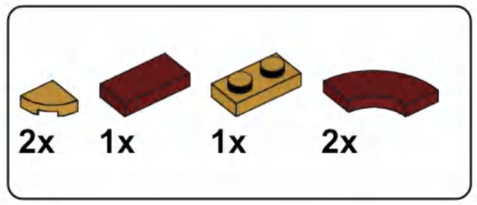

036

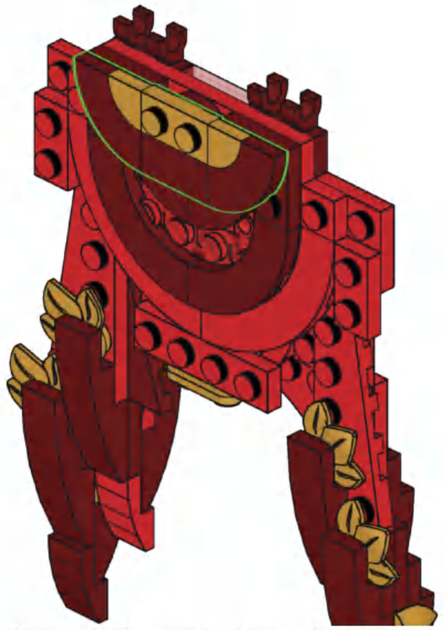

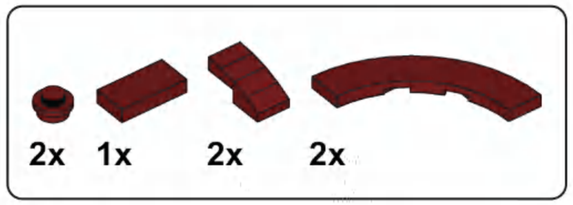

037

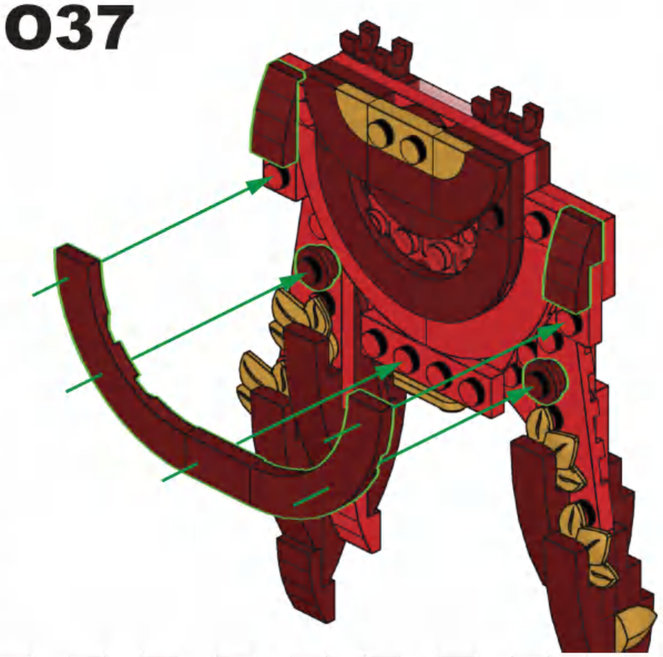

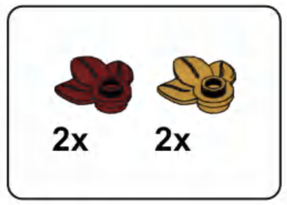

038

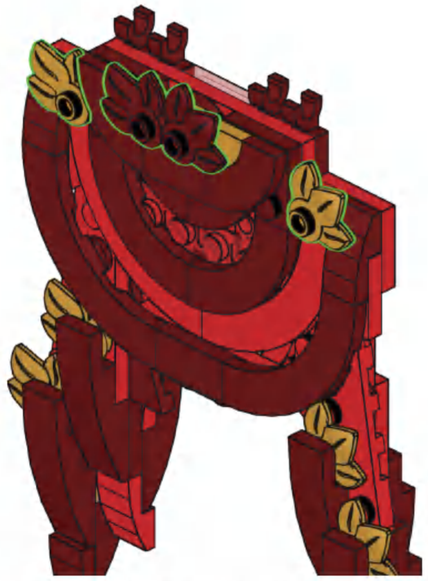

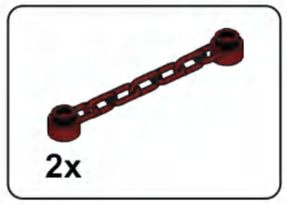

039

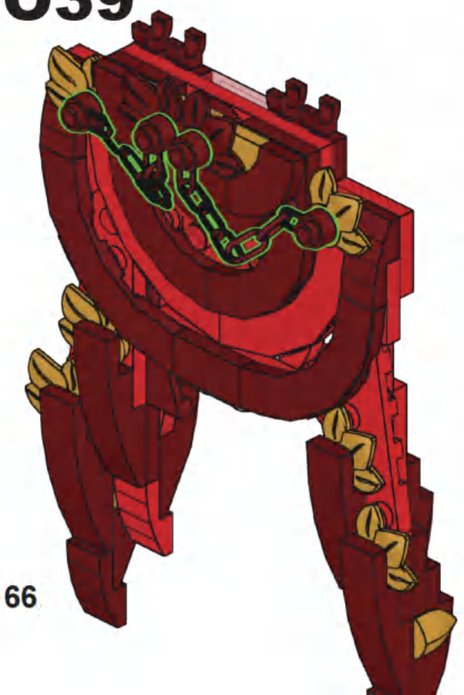

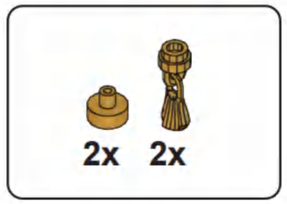

040

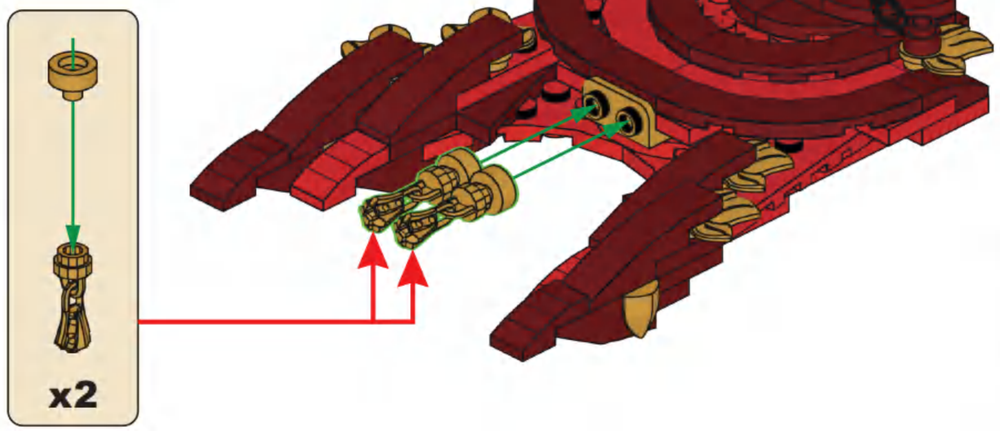

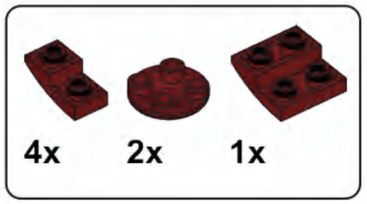

041

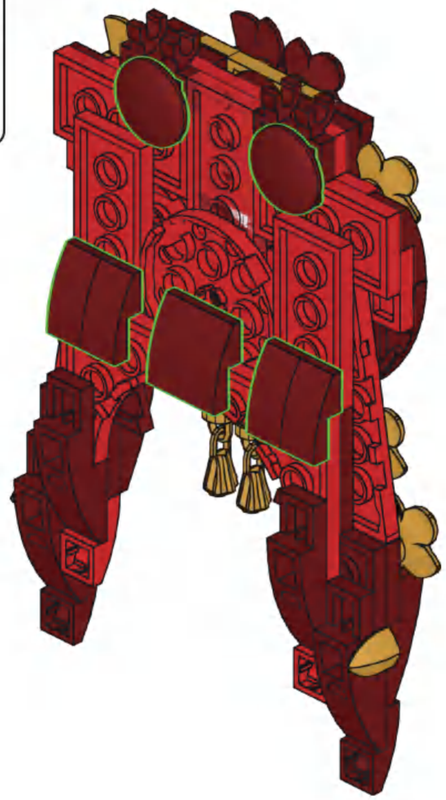

042

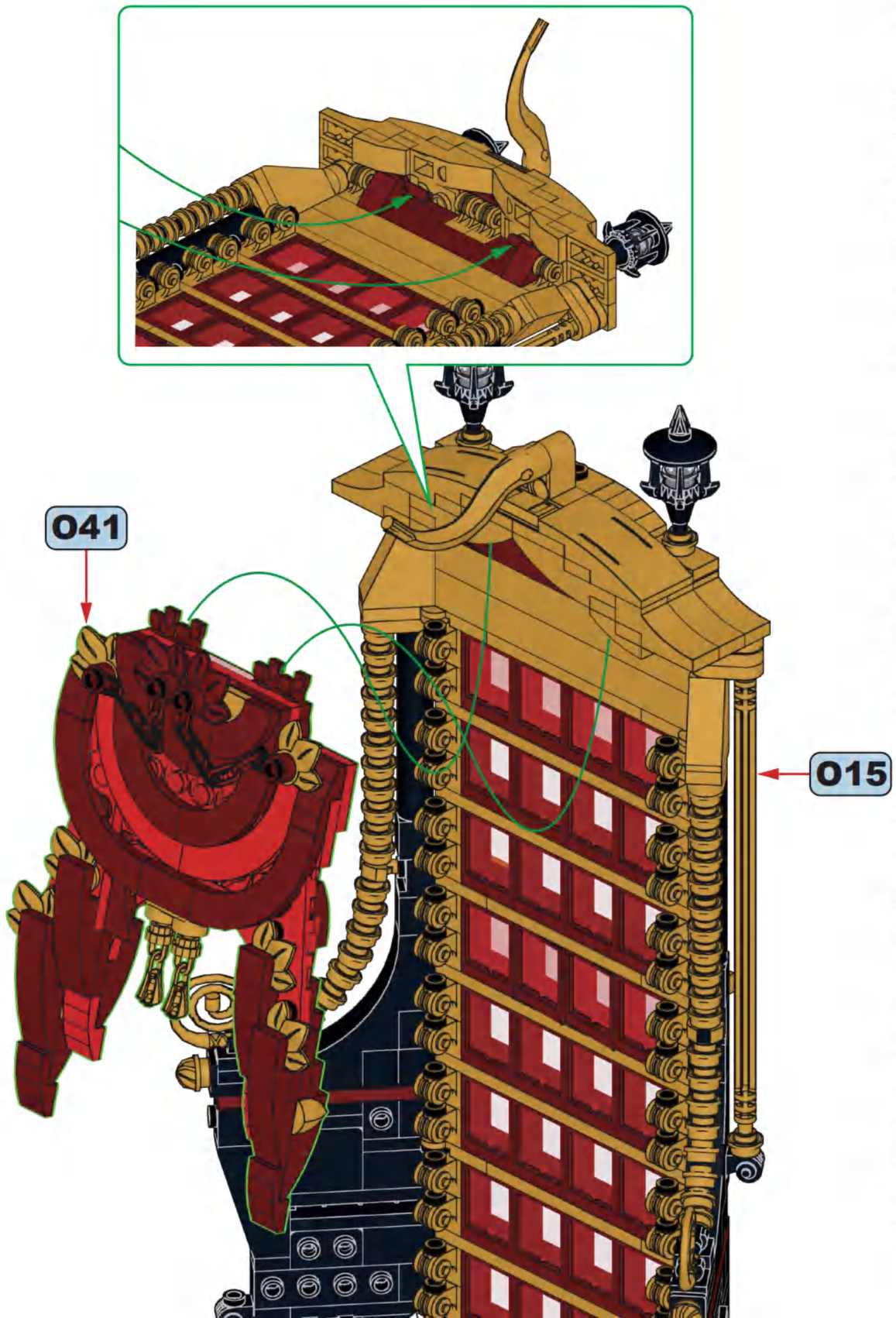

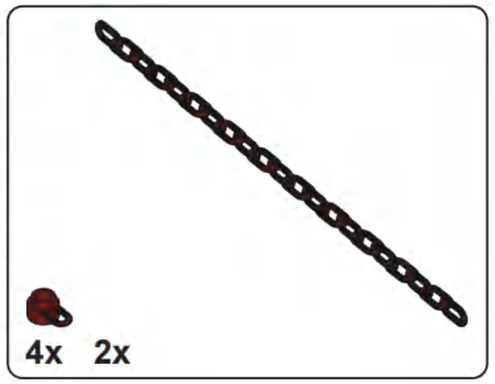

043

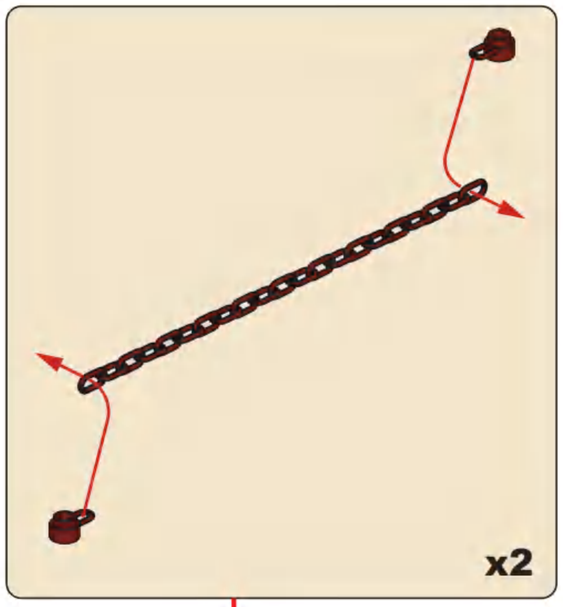

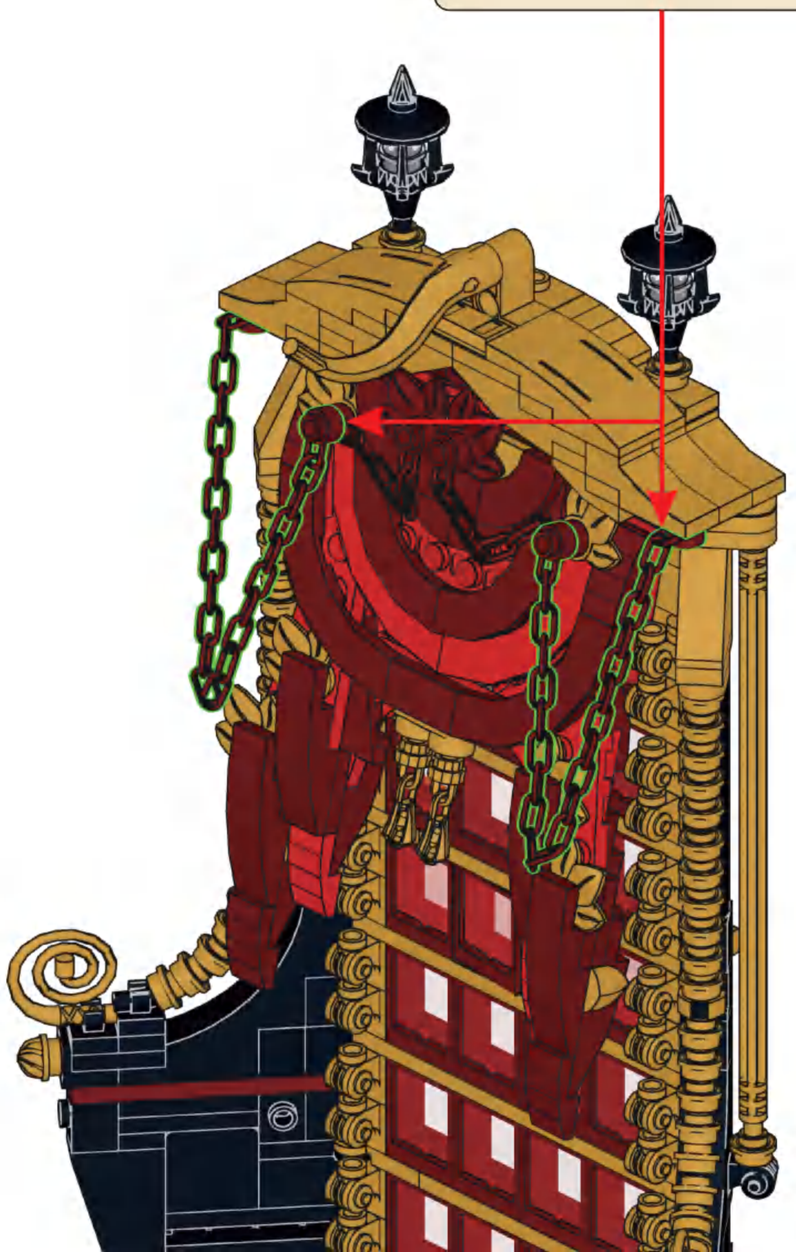

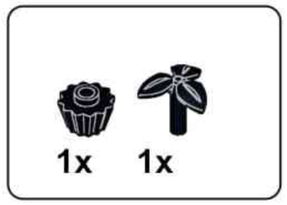

044

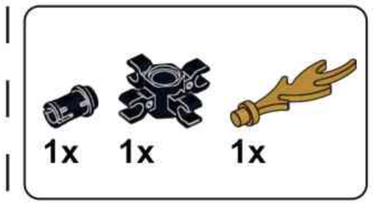

045

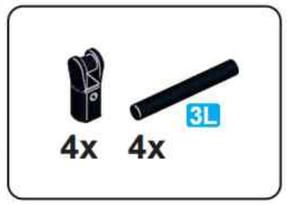

046

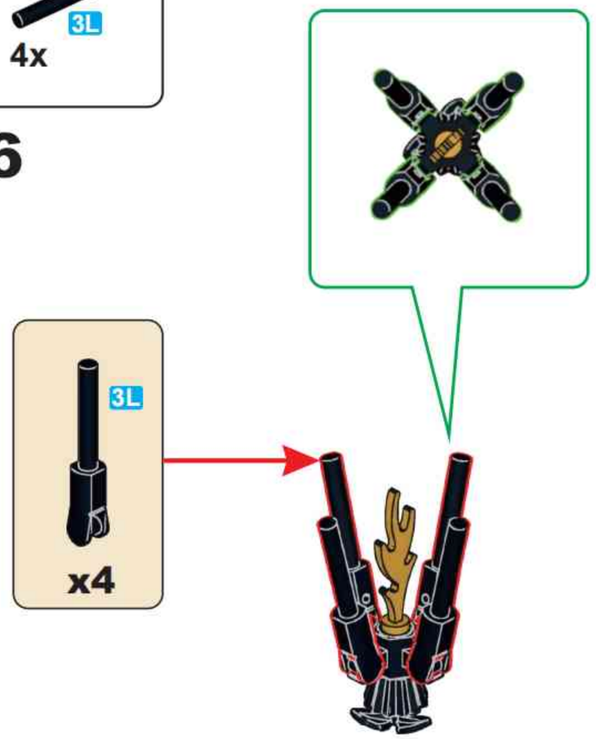

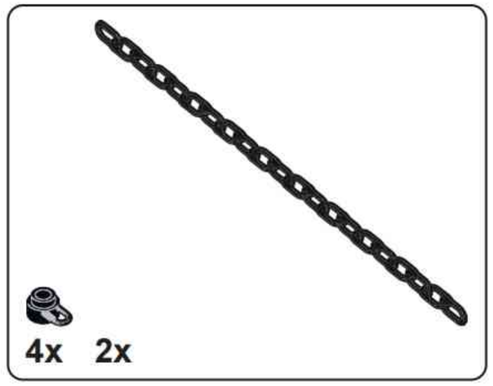

047

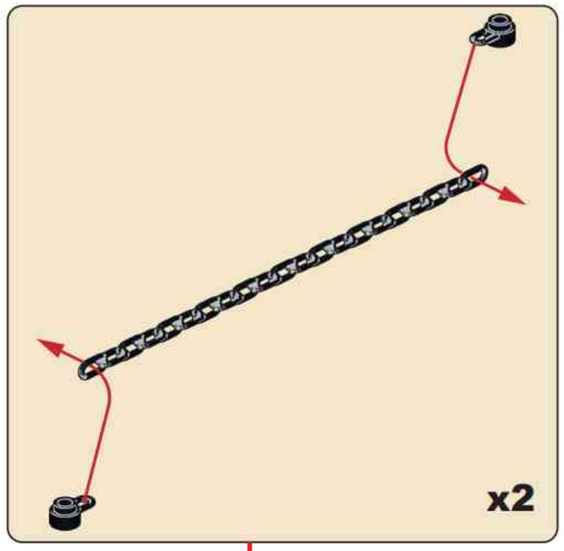

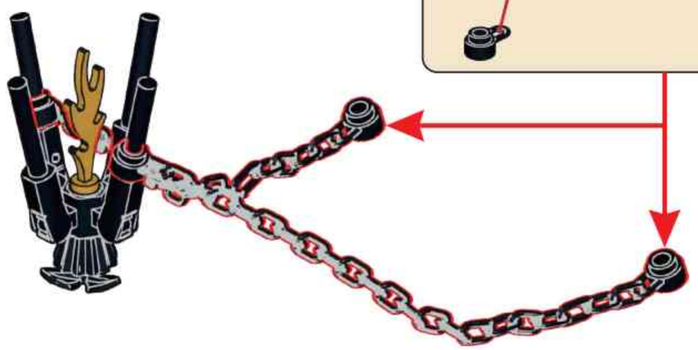

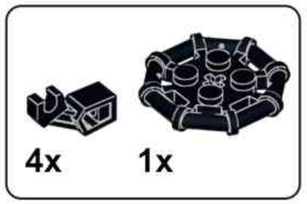

048

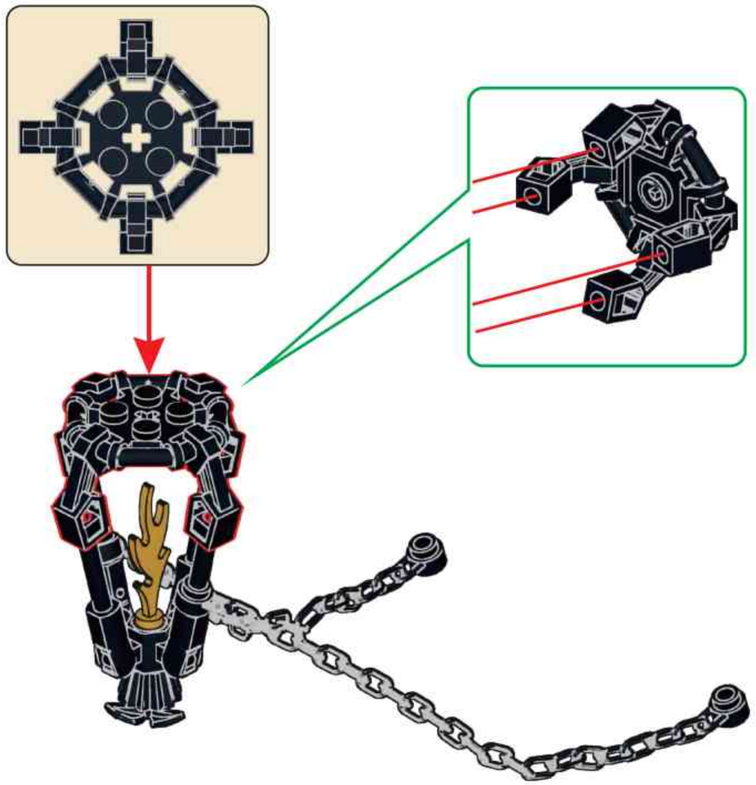

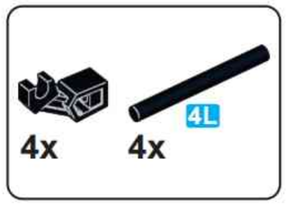

049

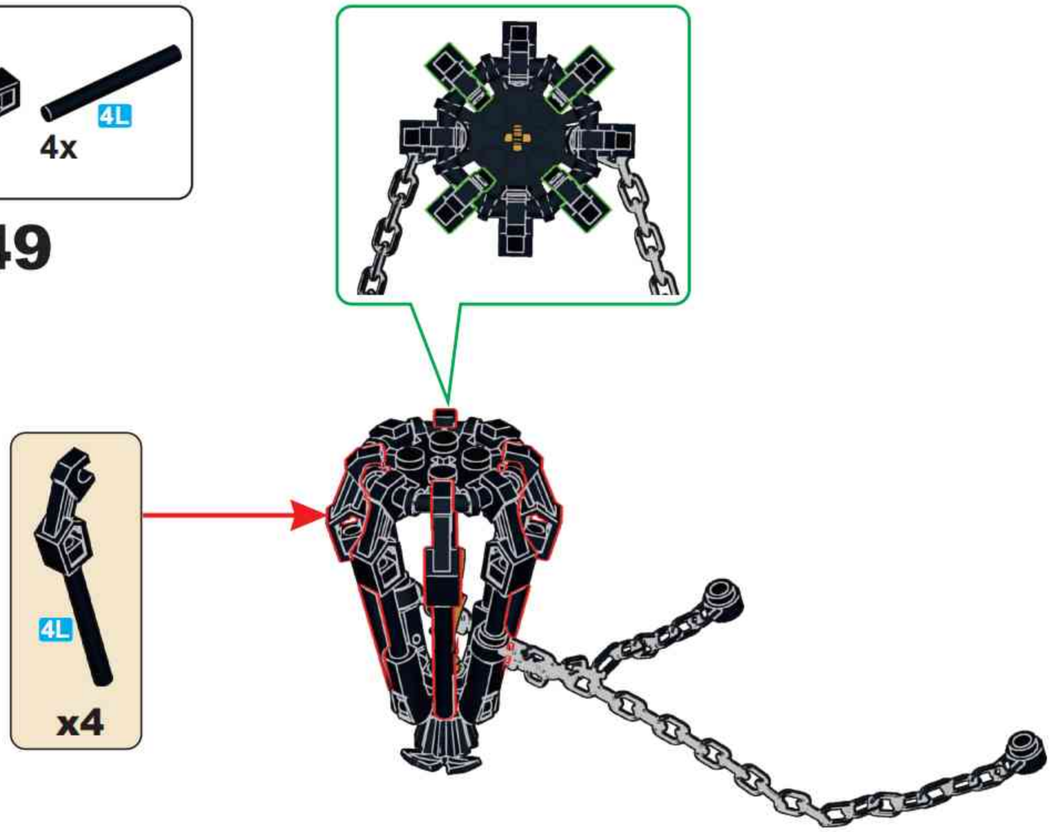

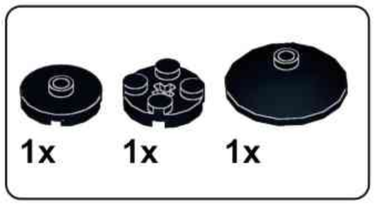

050

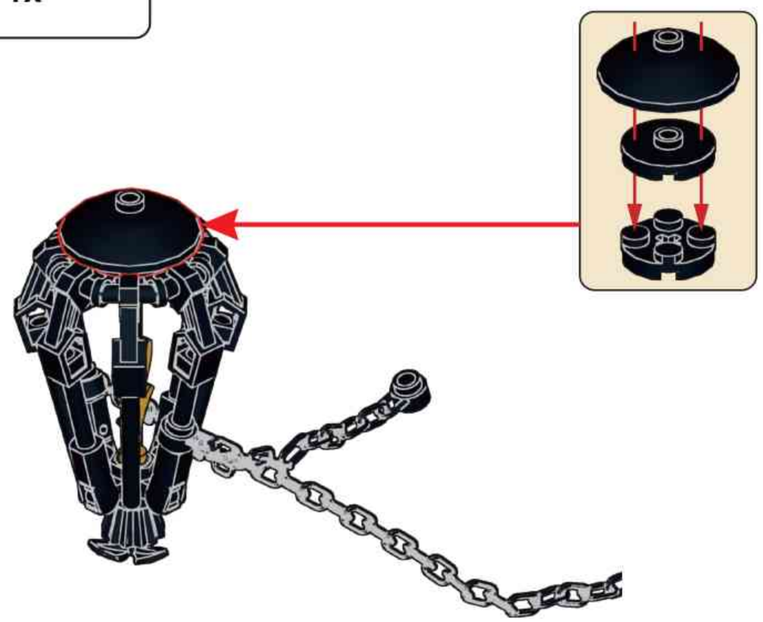

051

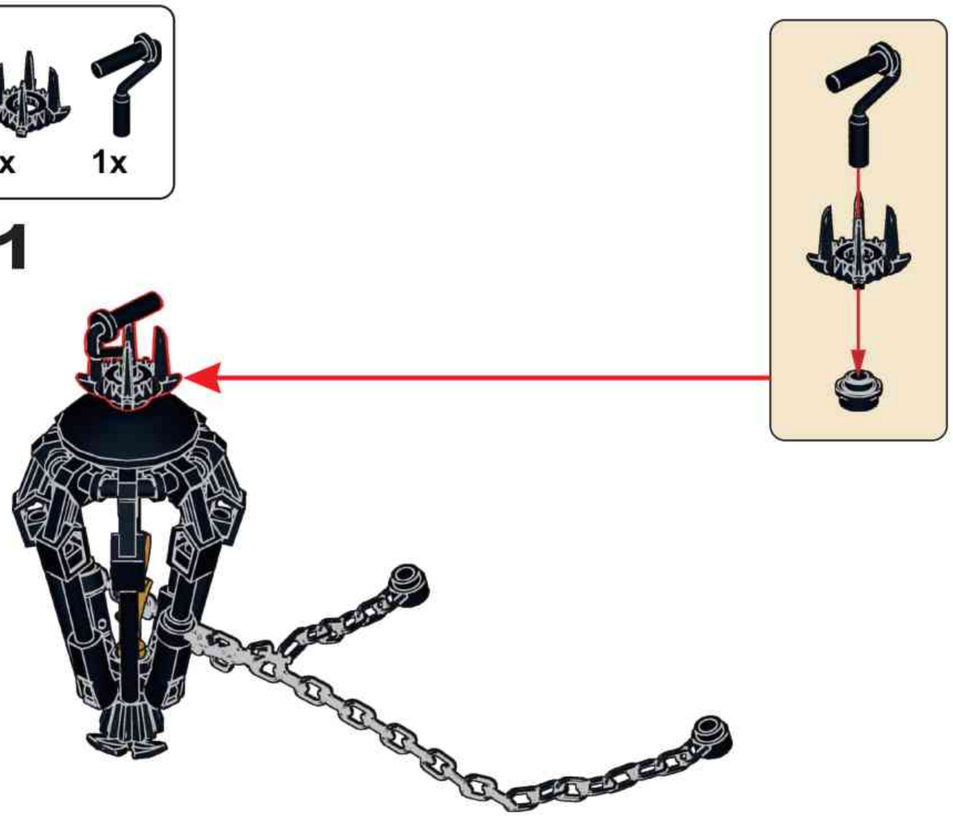

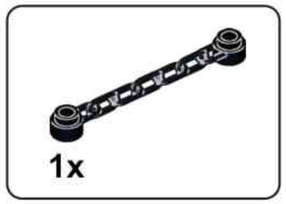

052

053

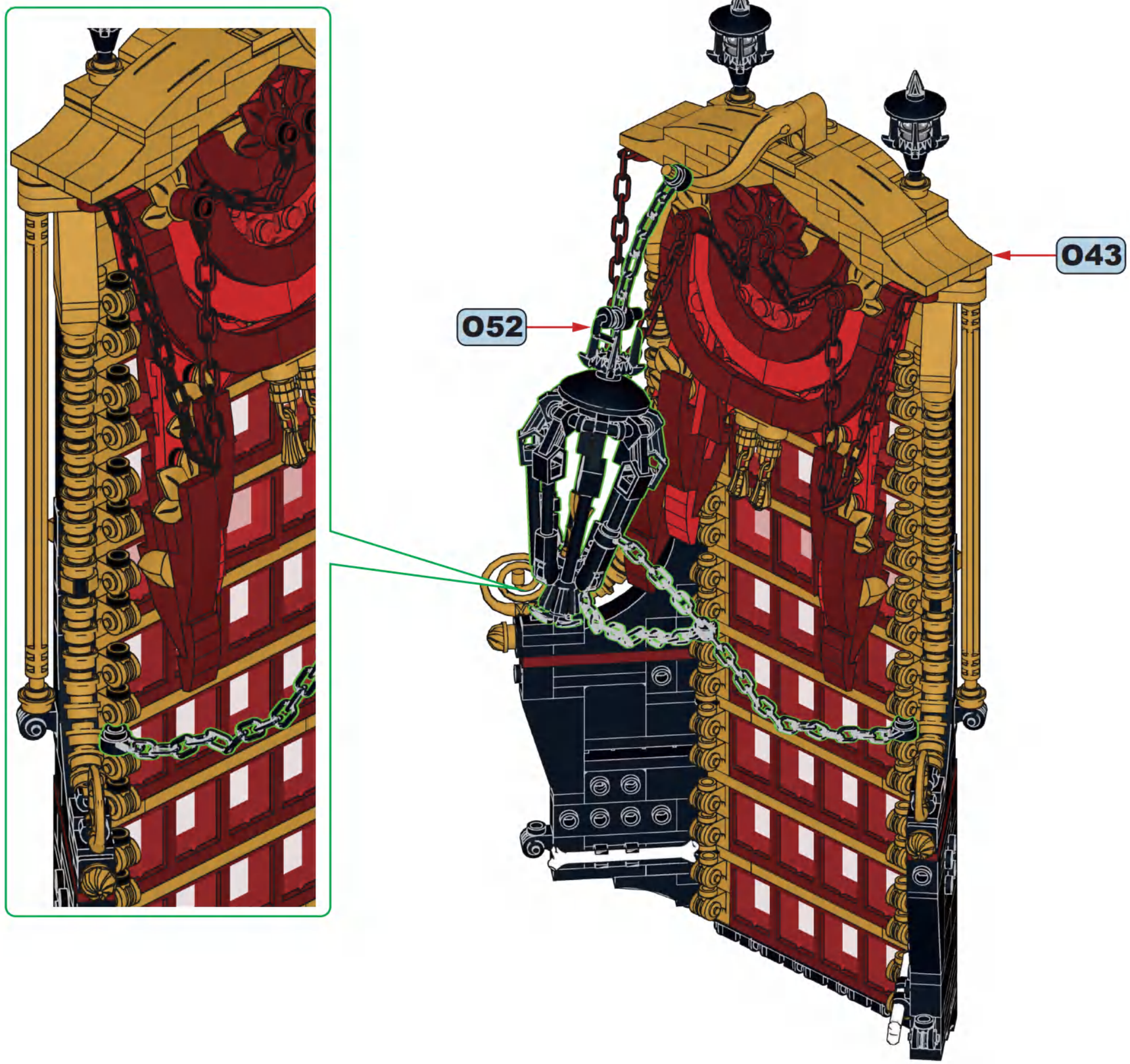

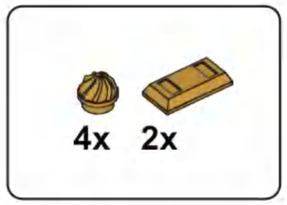

054

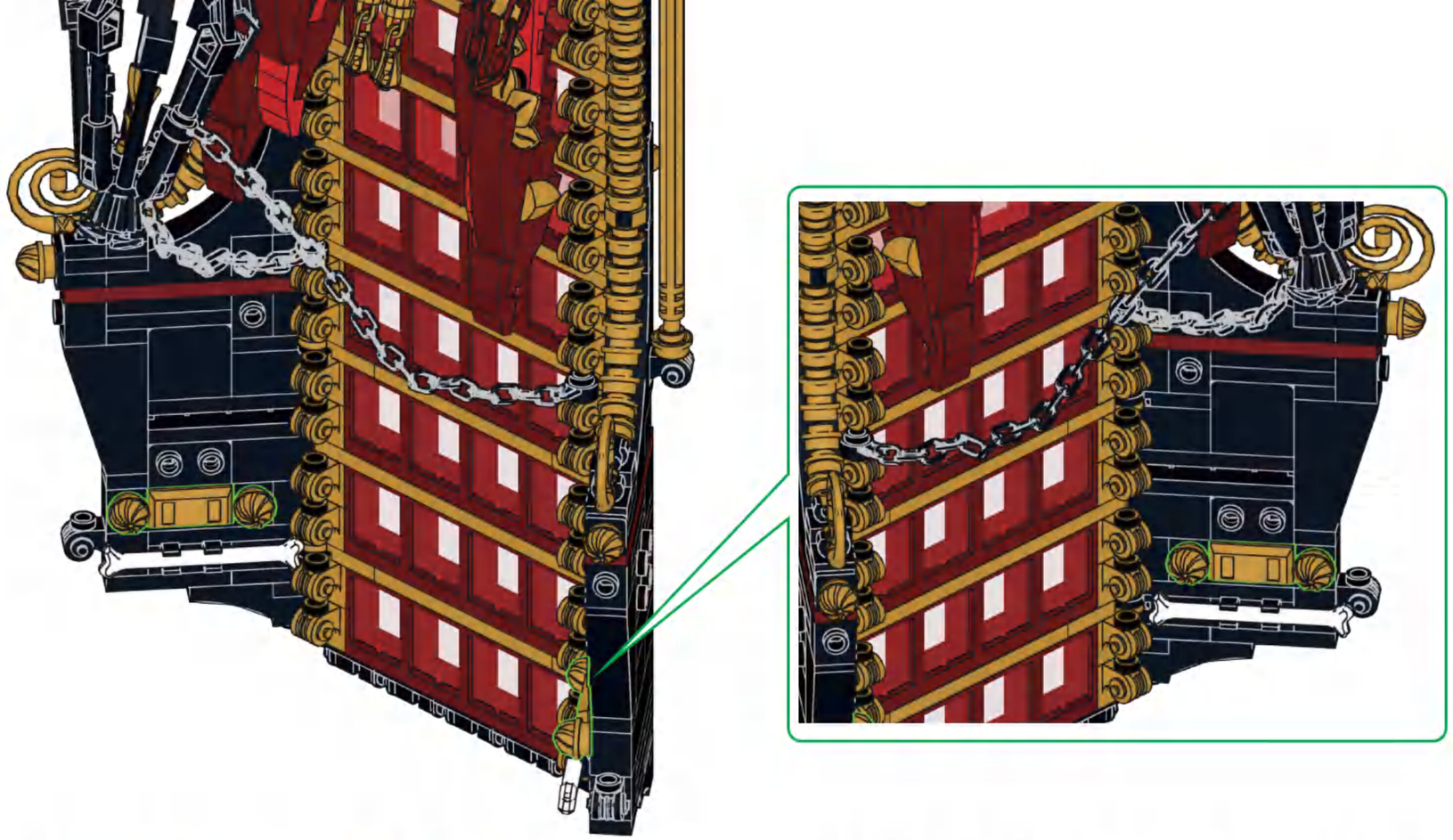

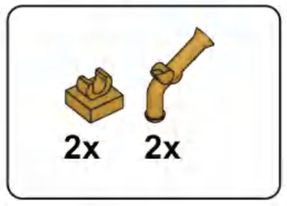

055

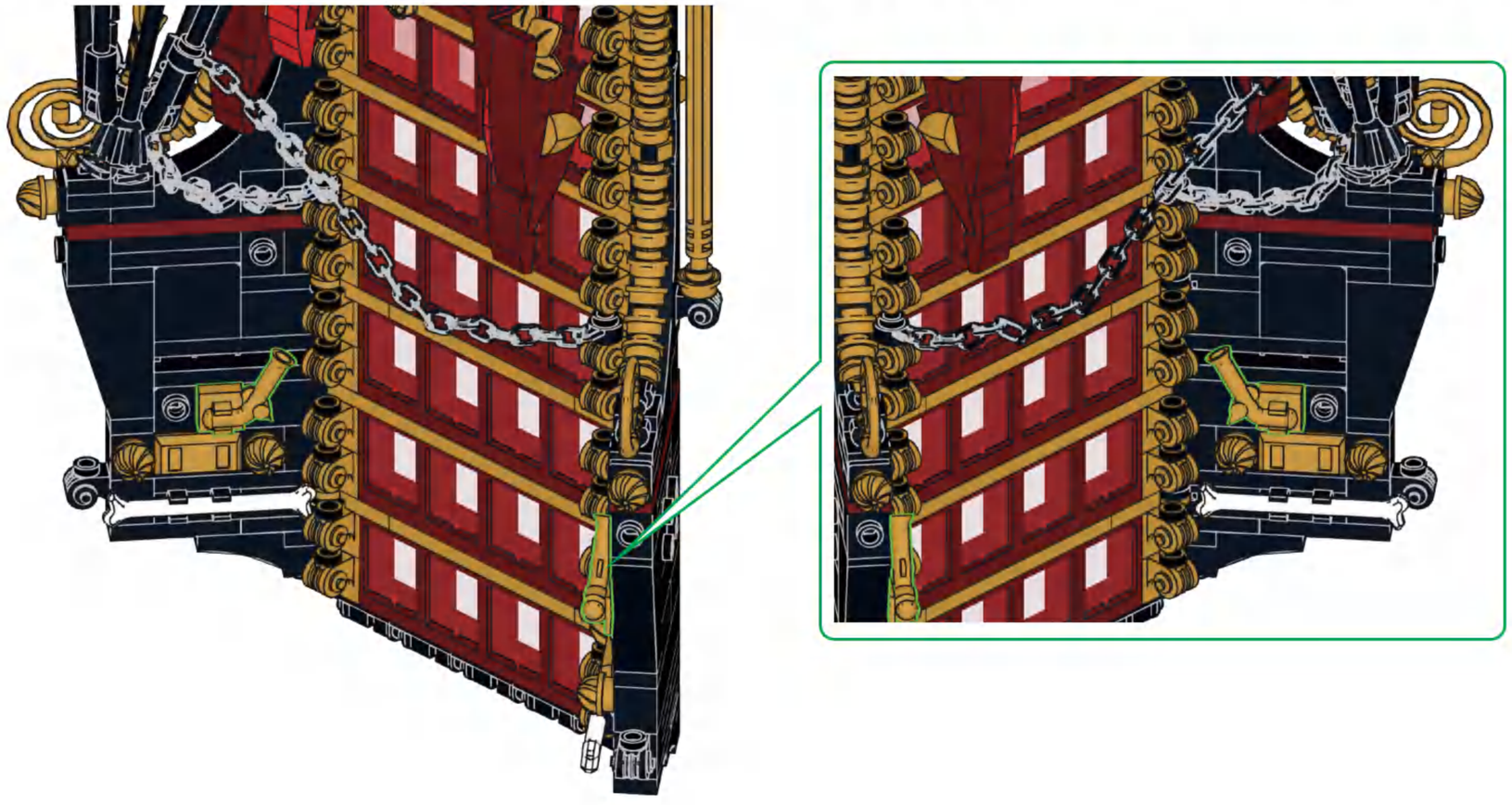

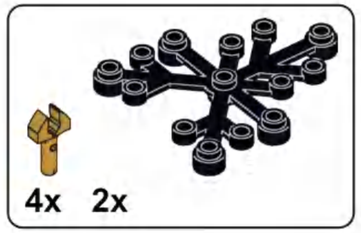

056

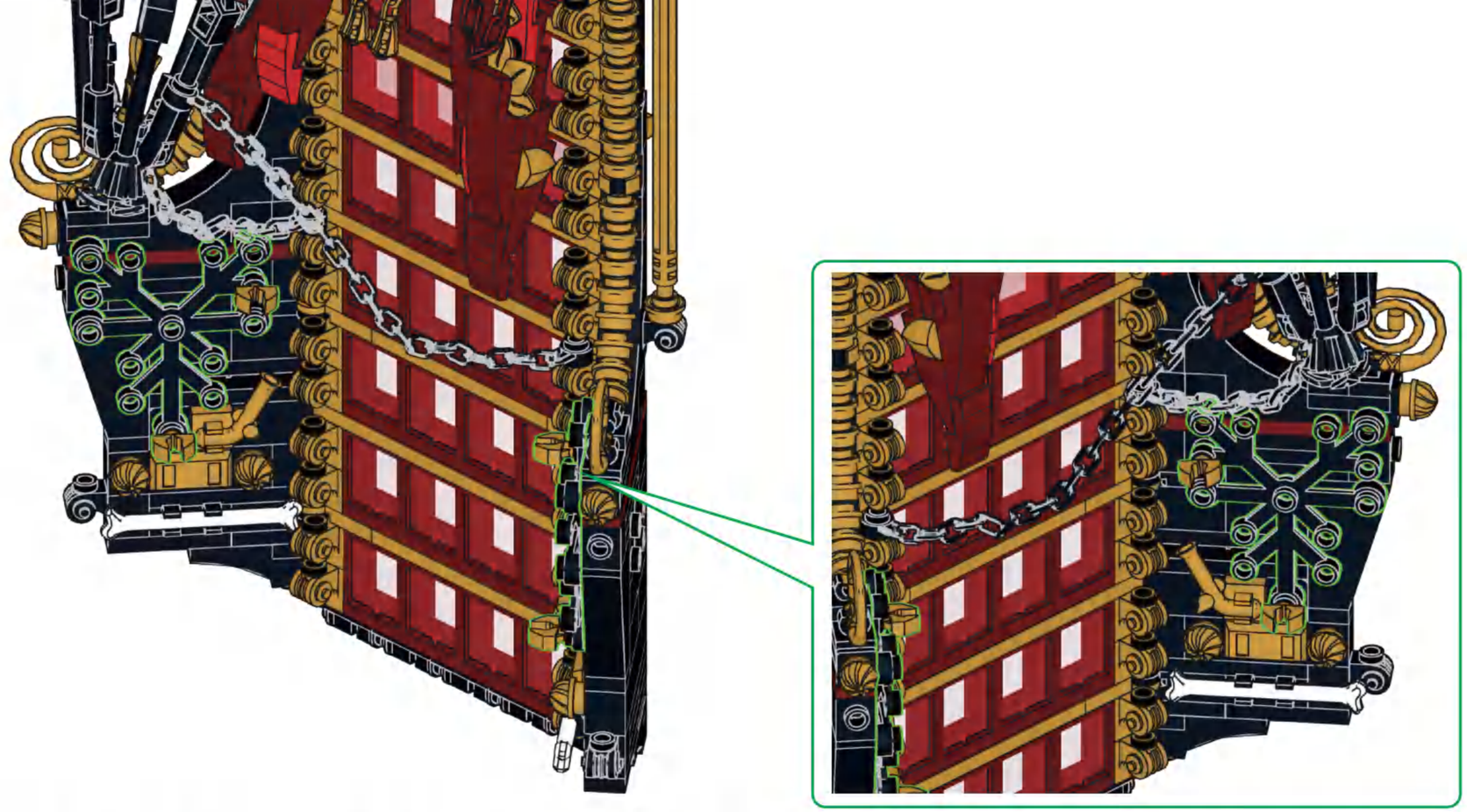

057

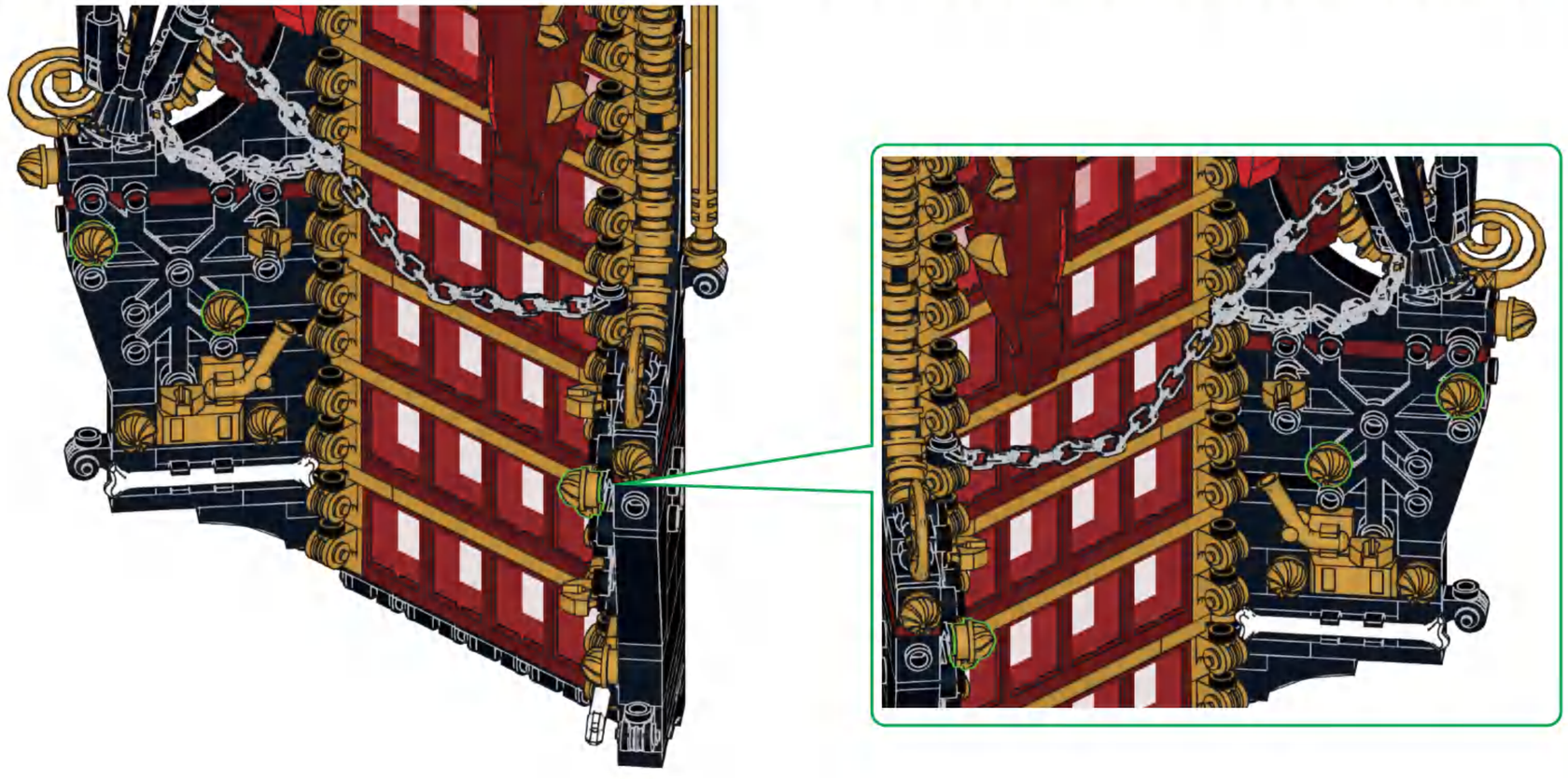

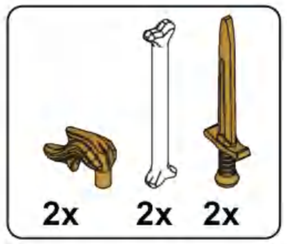

058

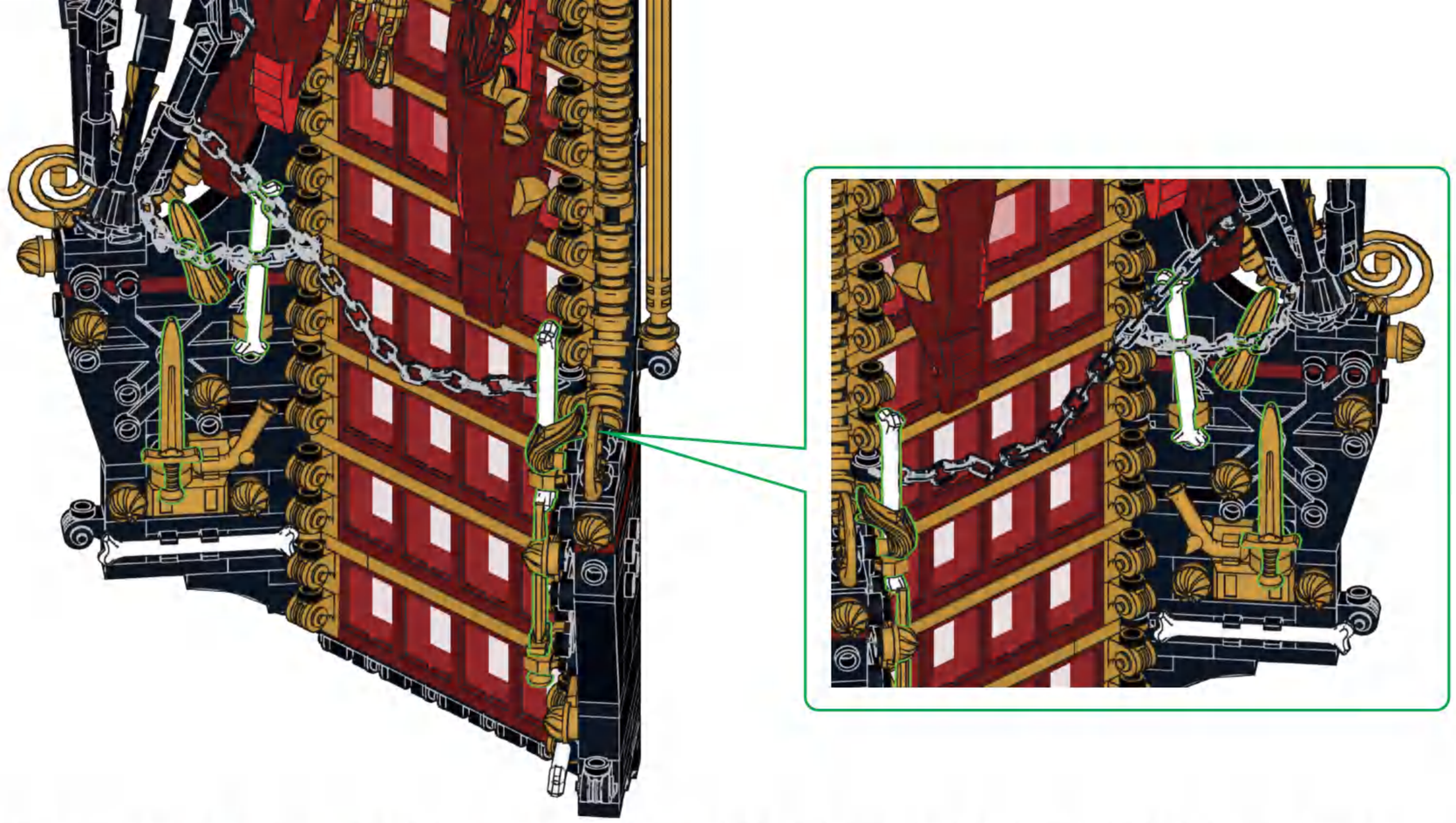

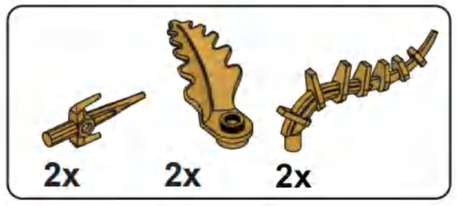

059

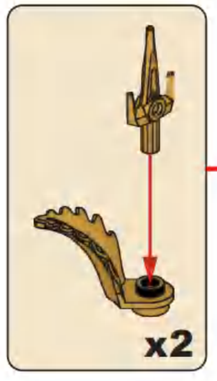

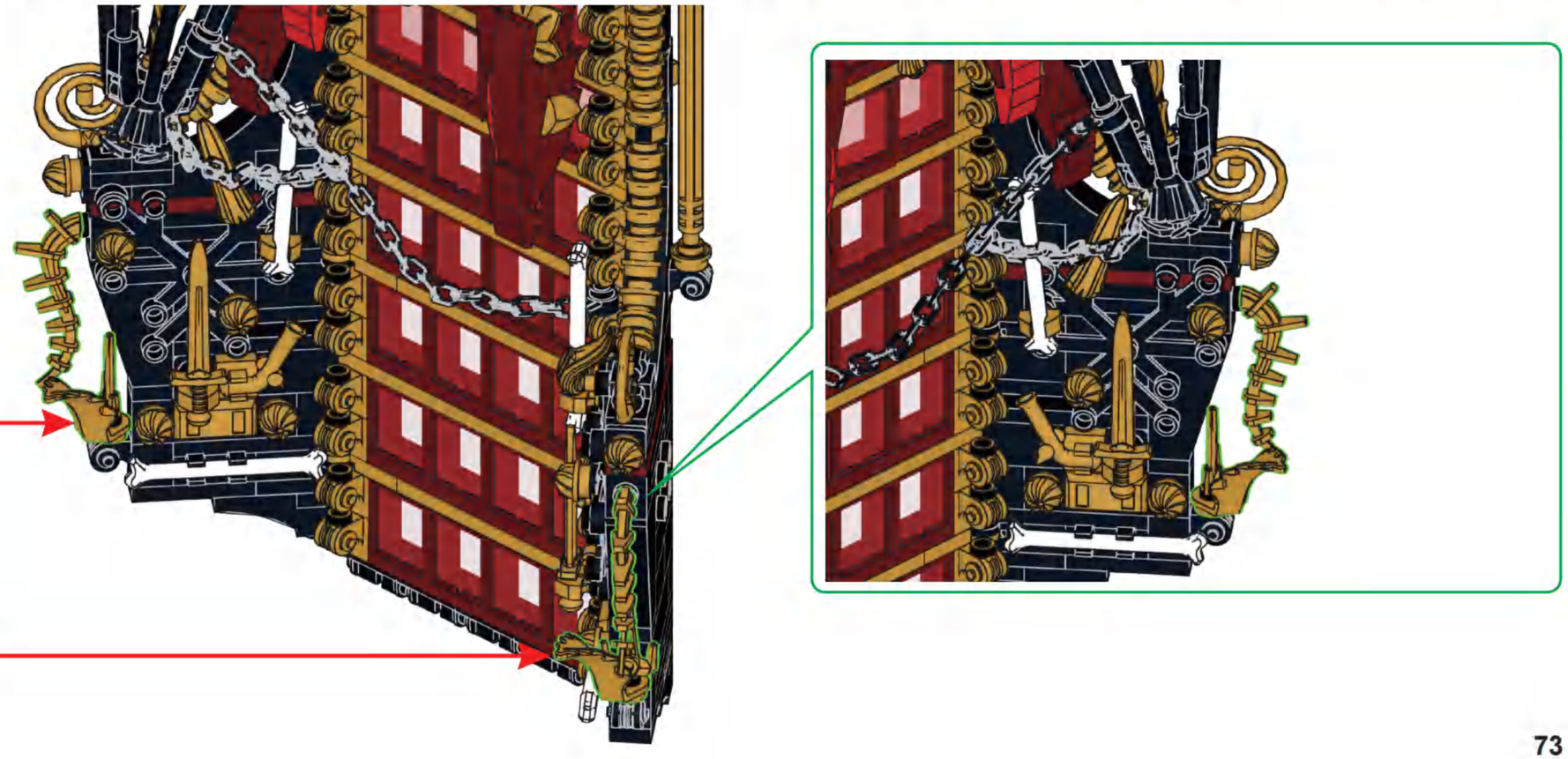

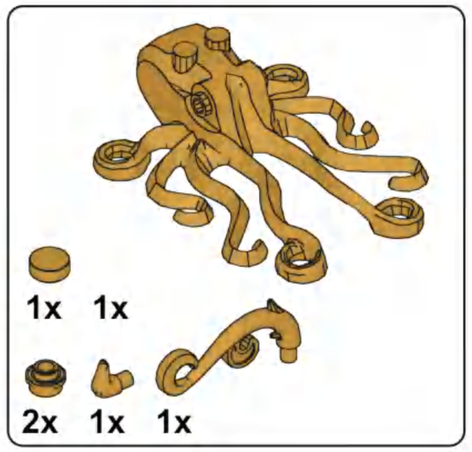

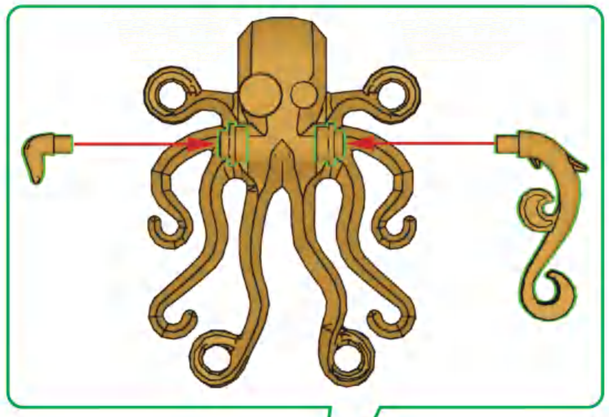

O60

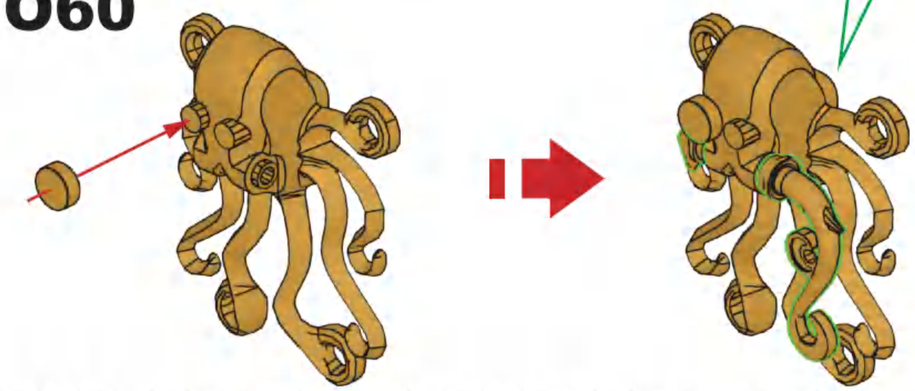

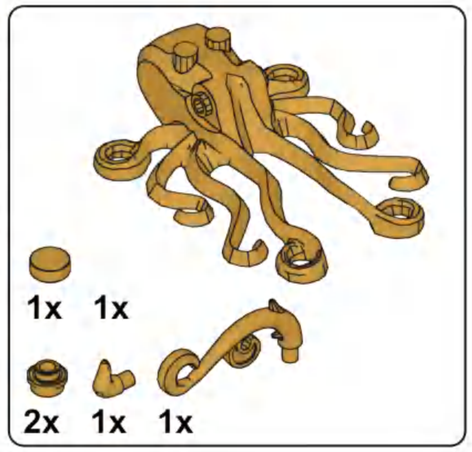

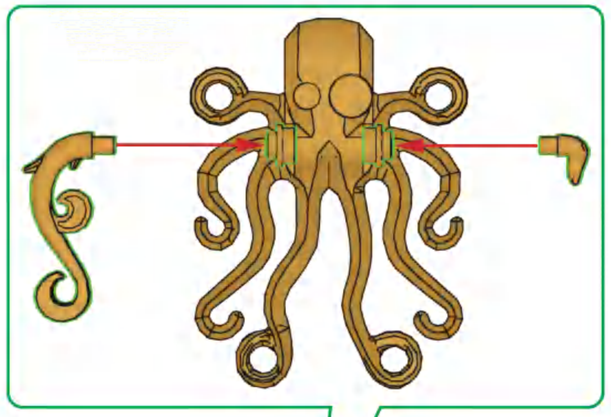

O61

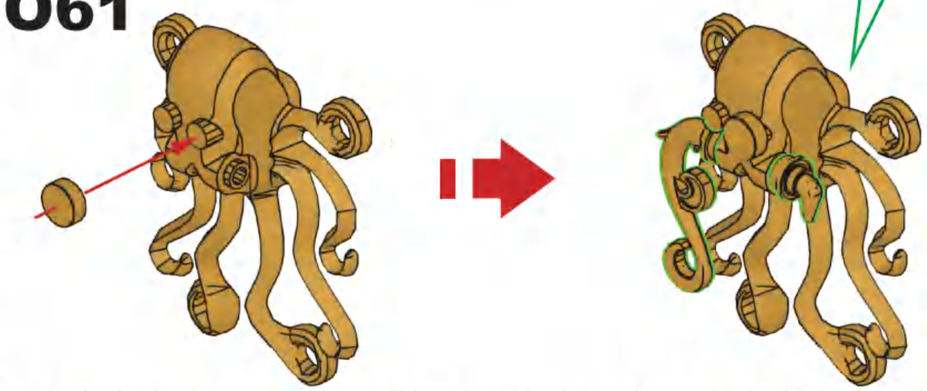

O62

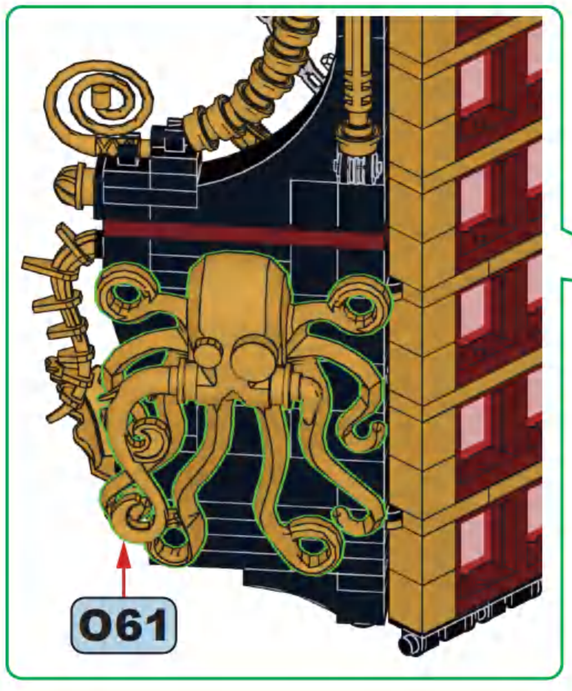

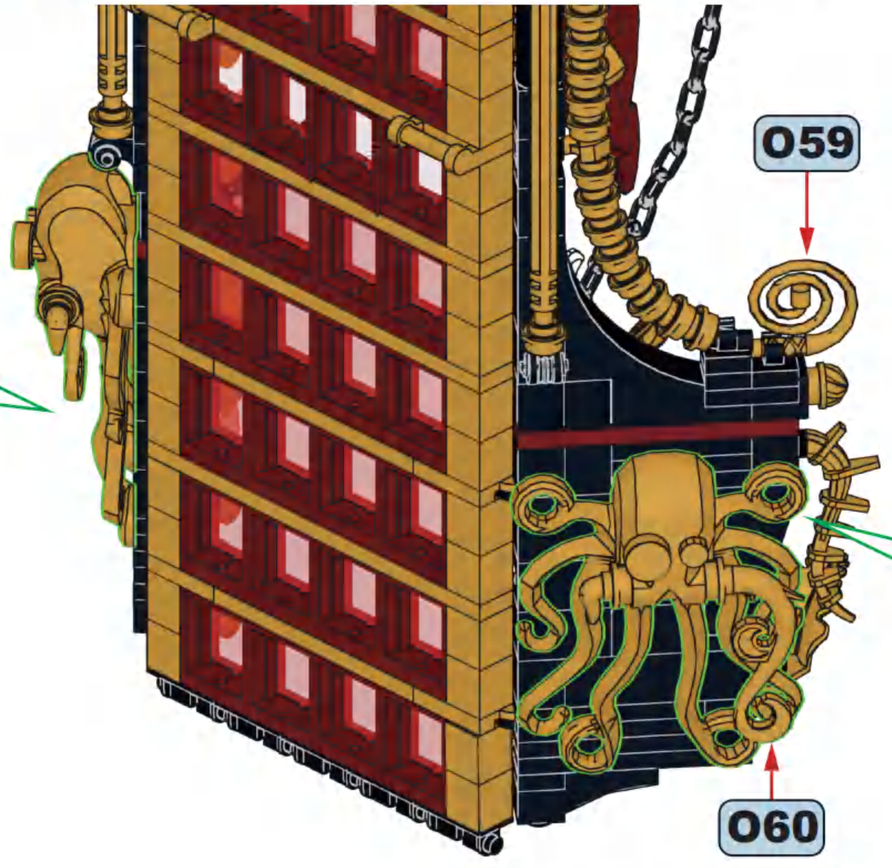

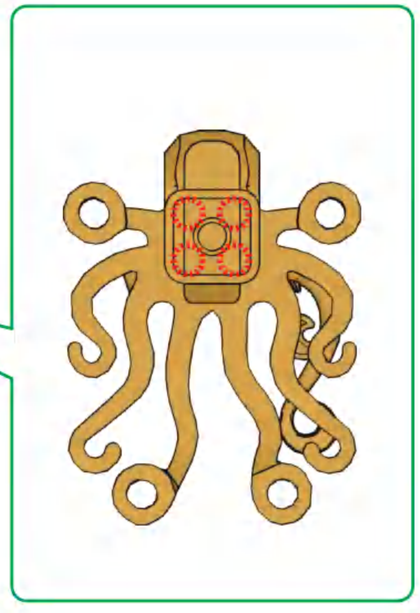

O63

O62

M97

P

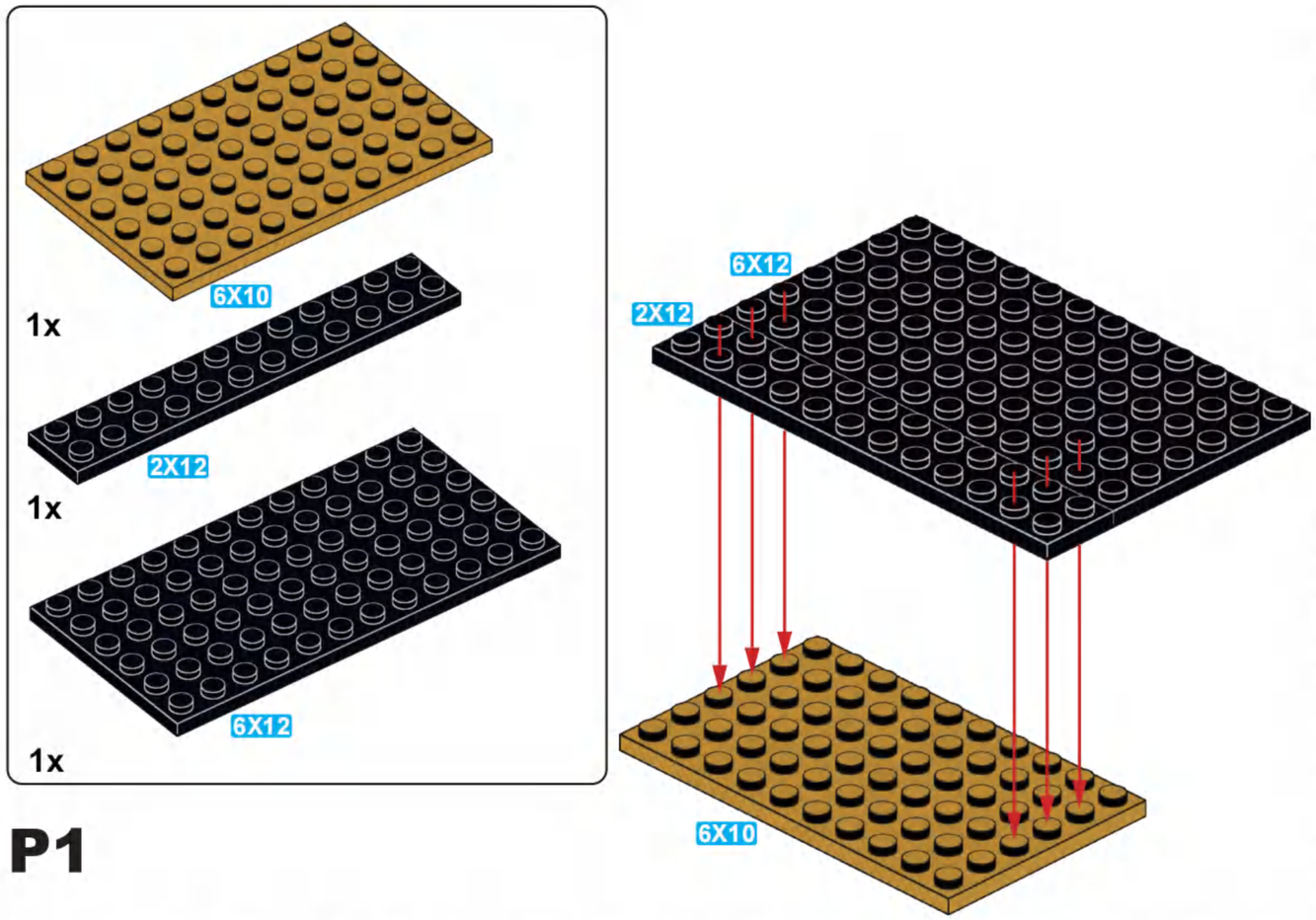

P1

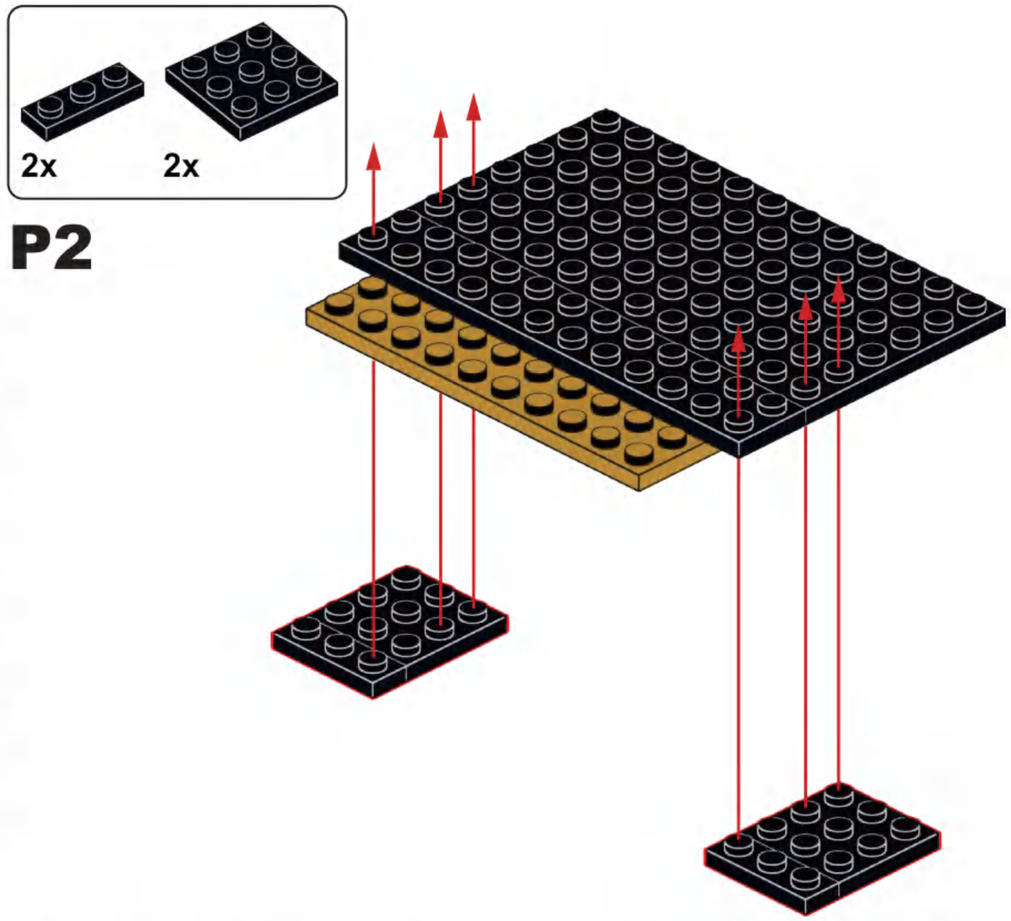

P2

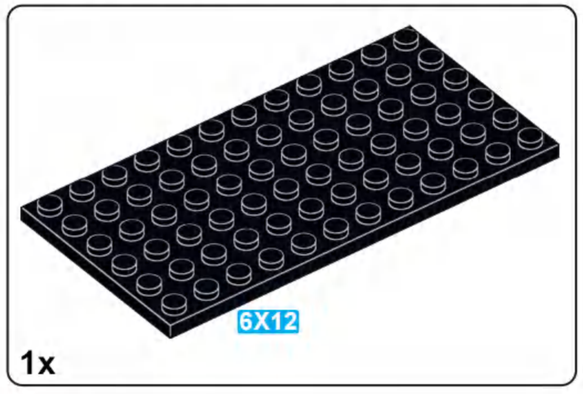

P3

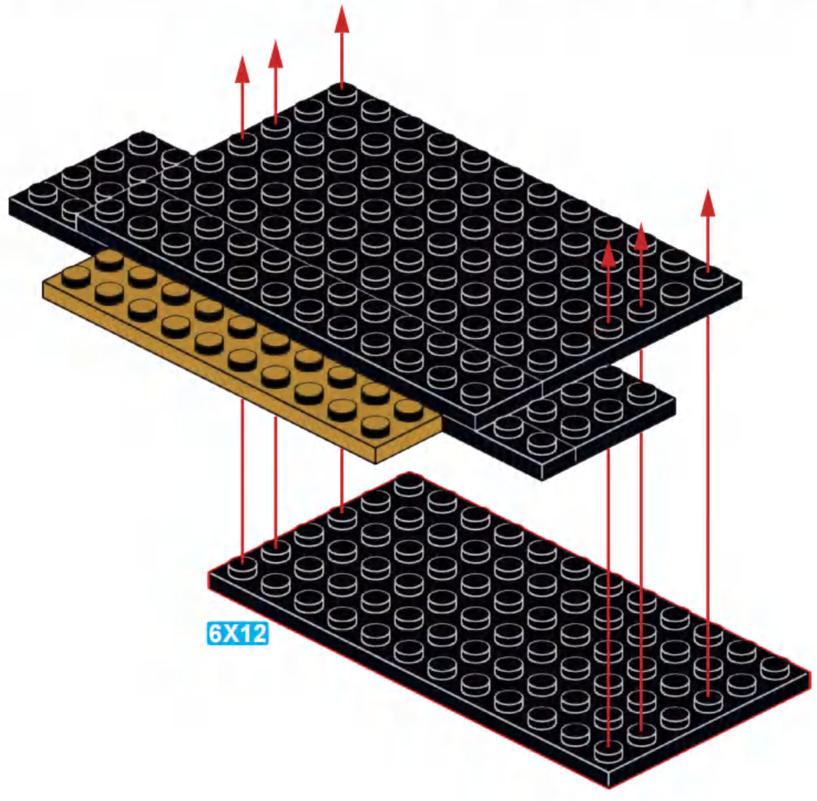

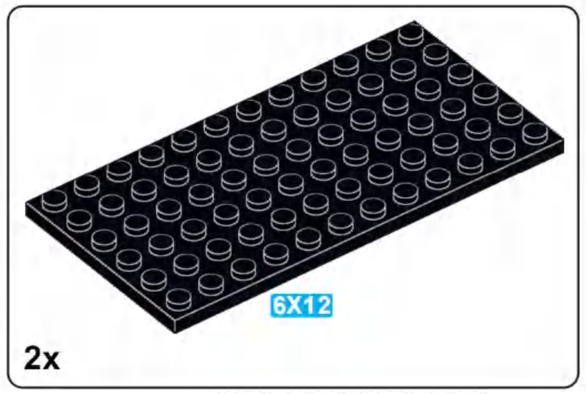

P4

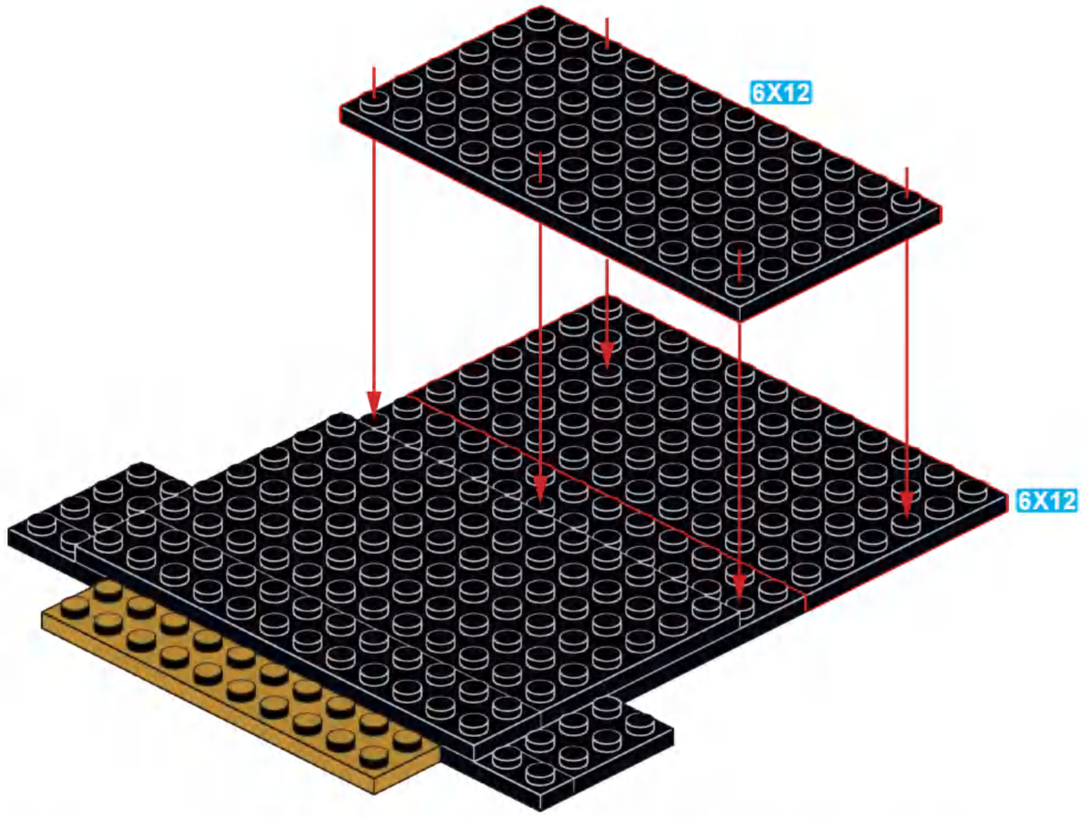

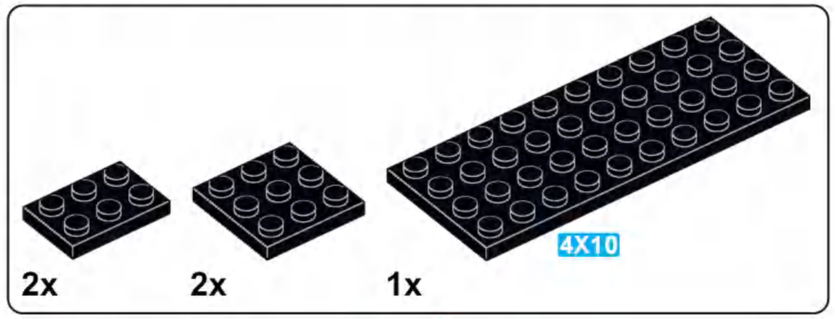

P5

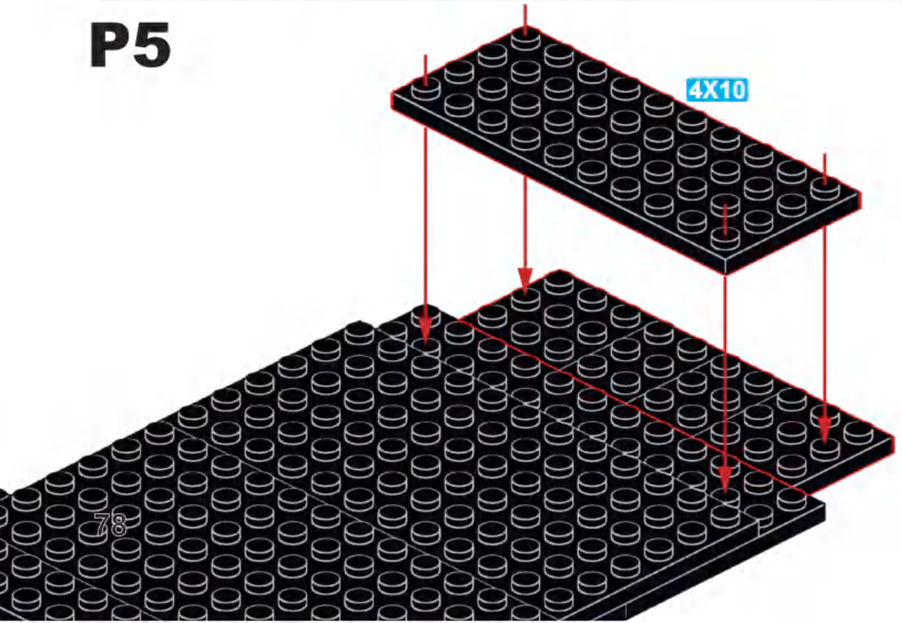

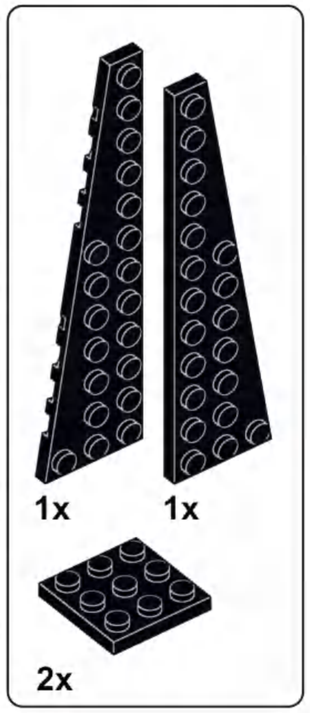

P6

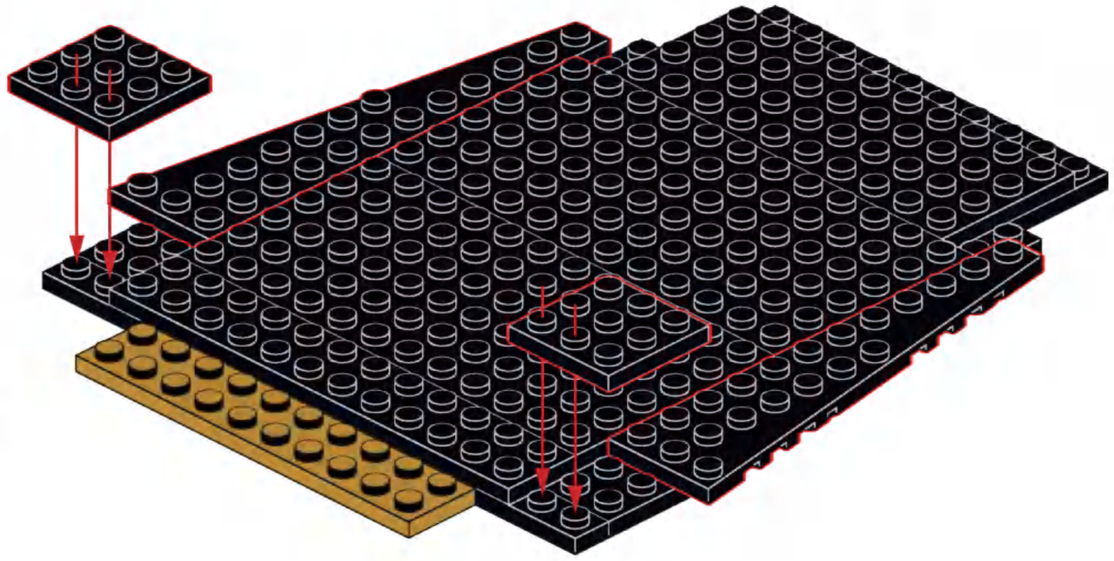

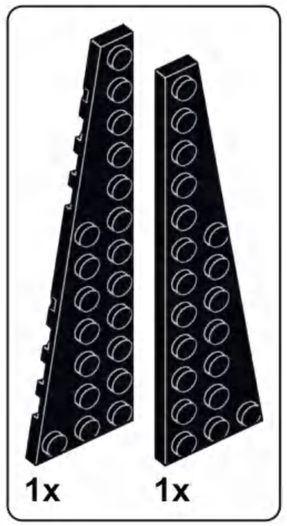

P7

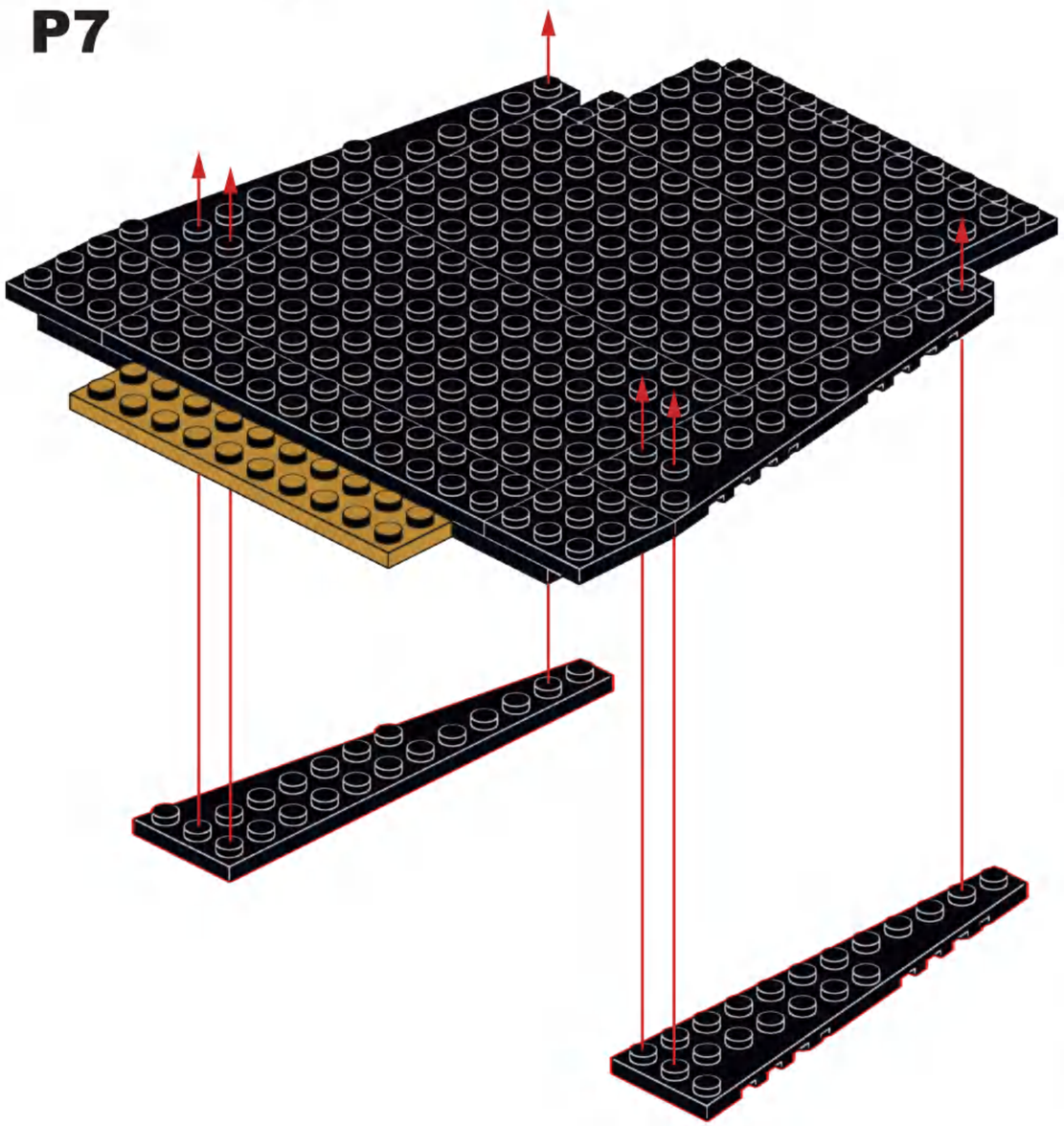

P8

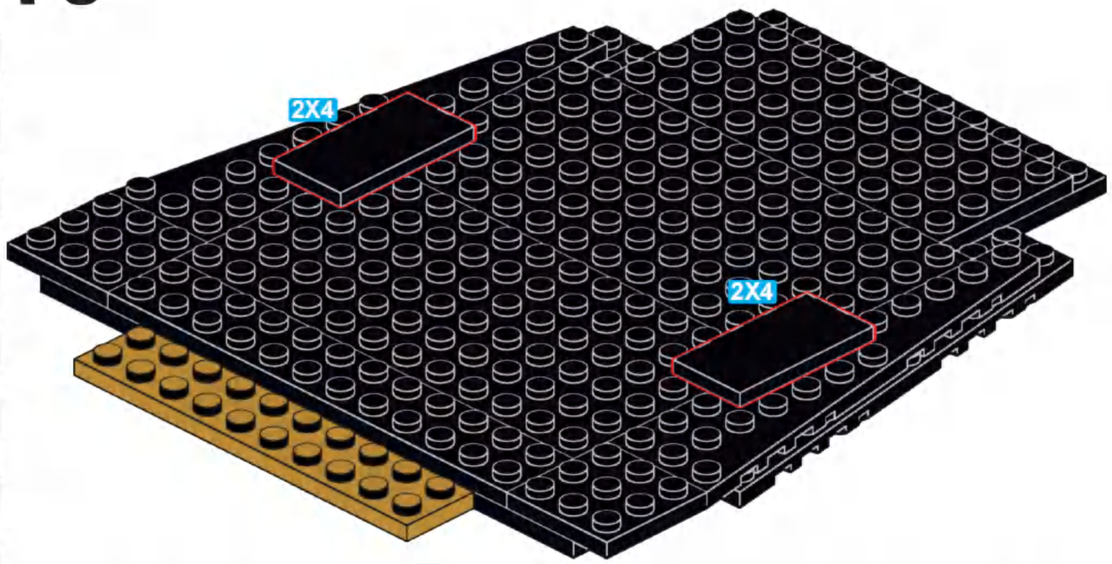

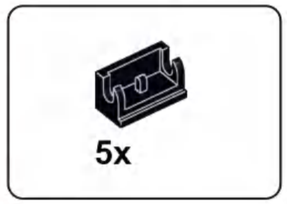

P9

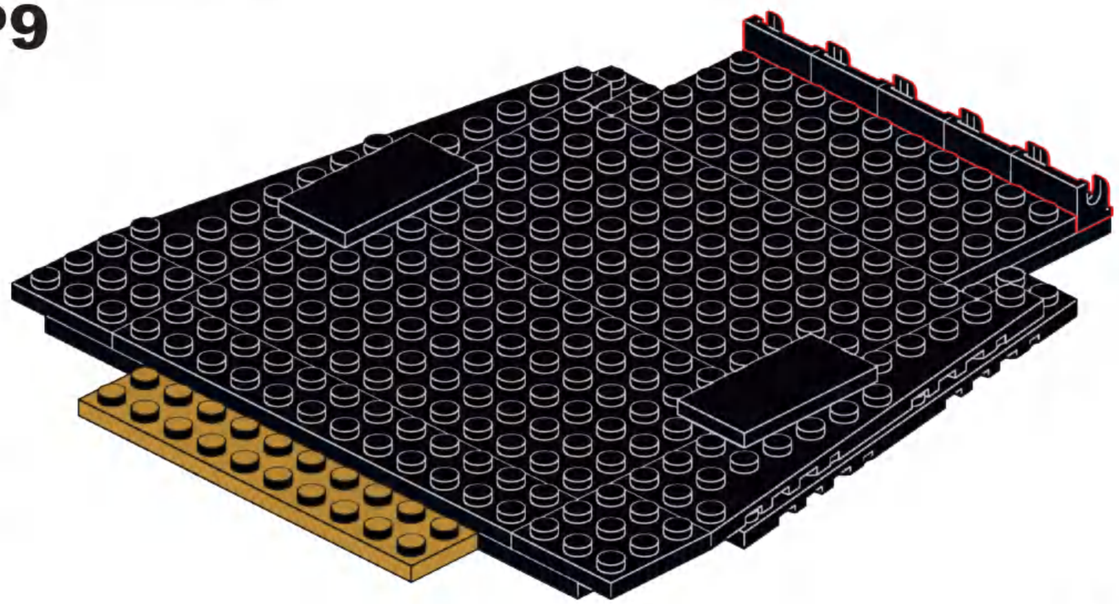

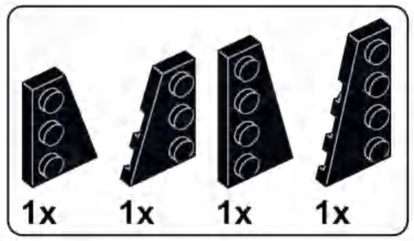

P10

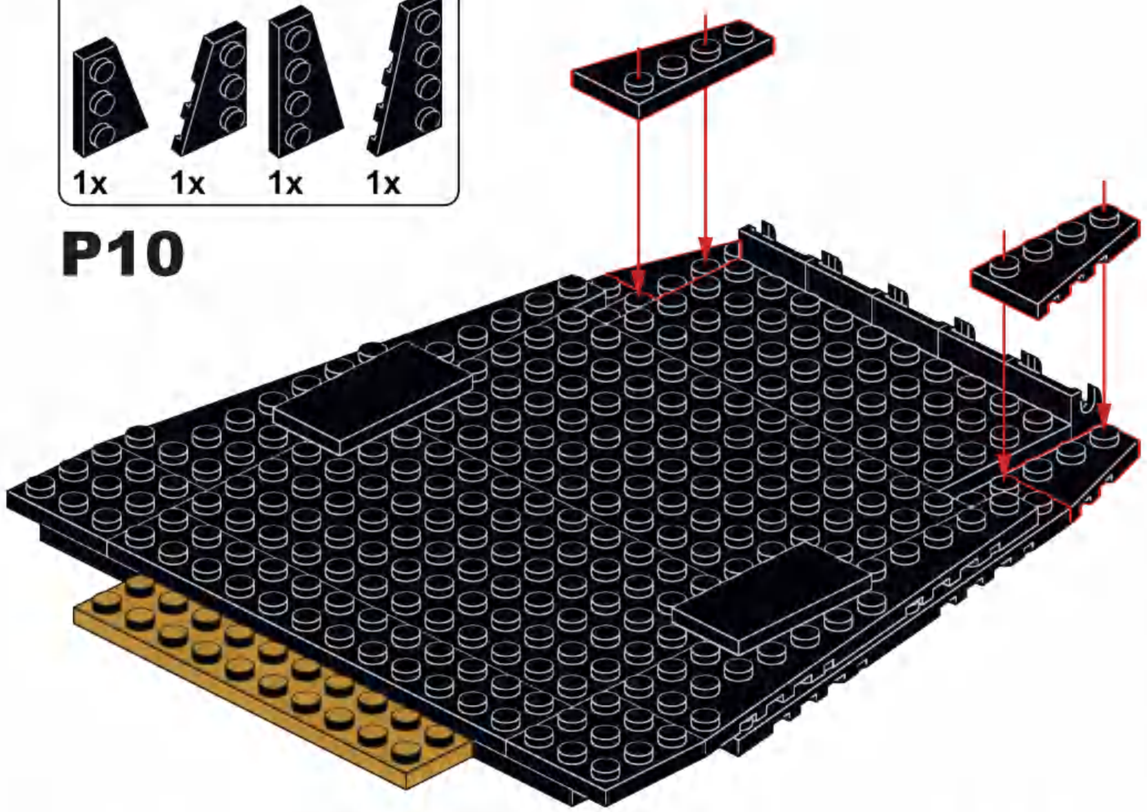

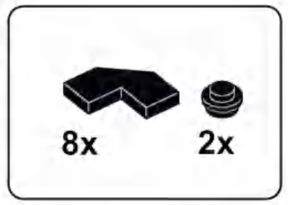

P11

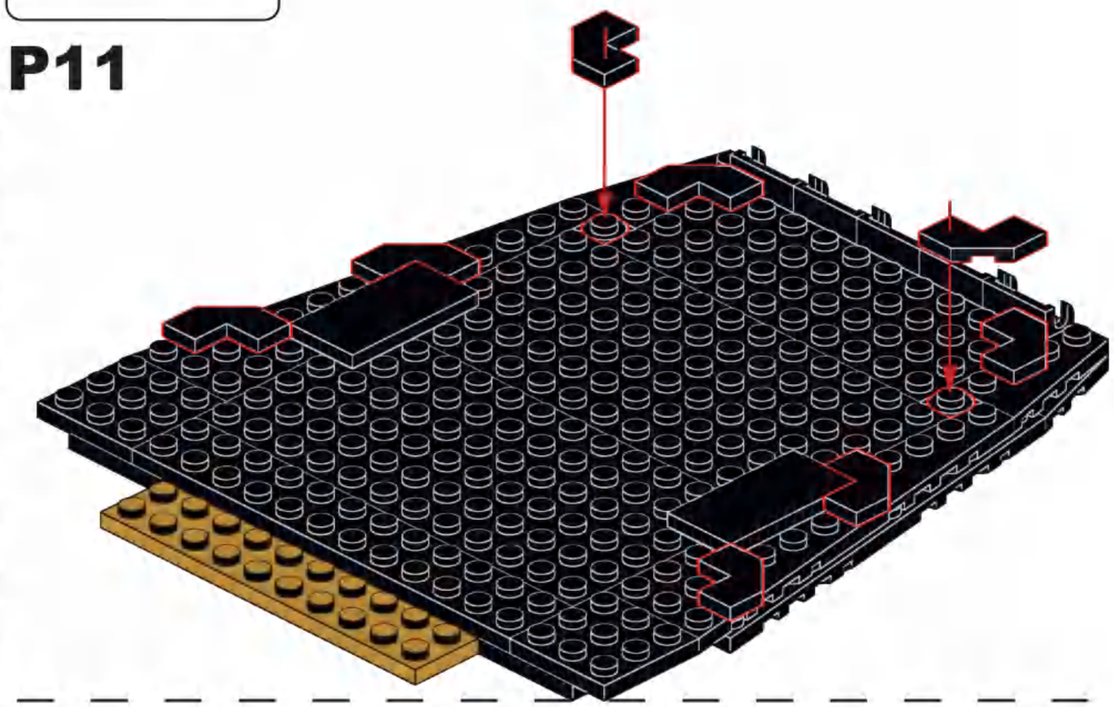

P12

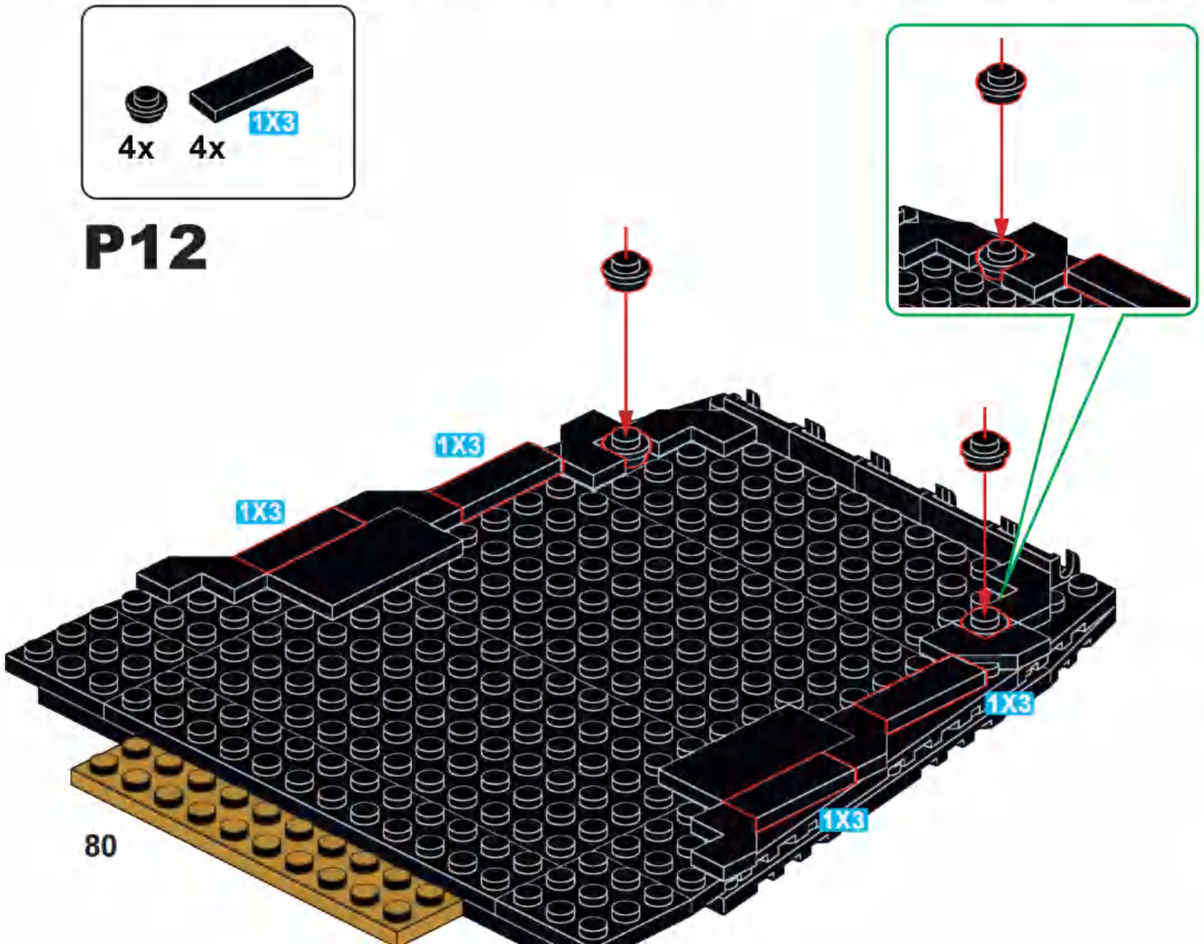

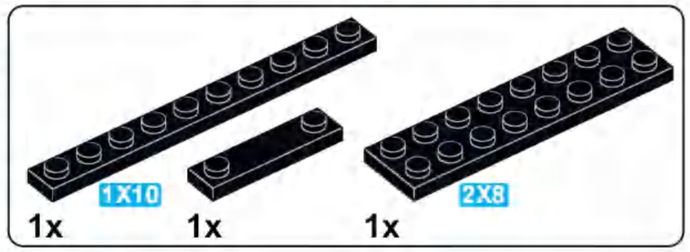

P13

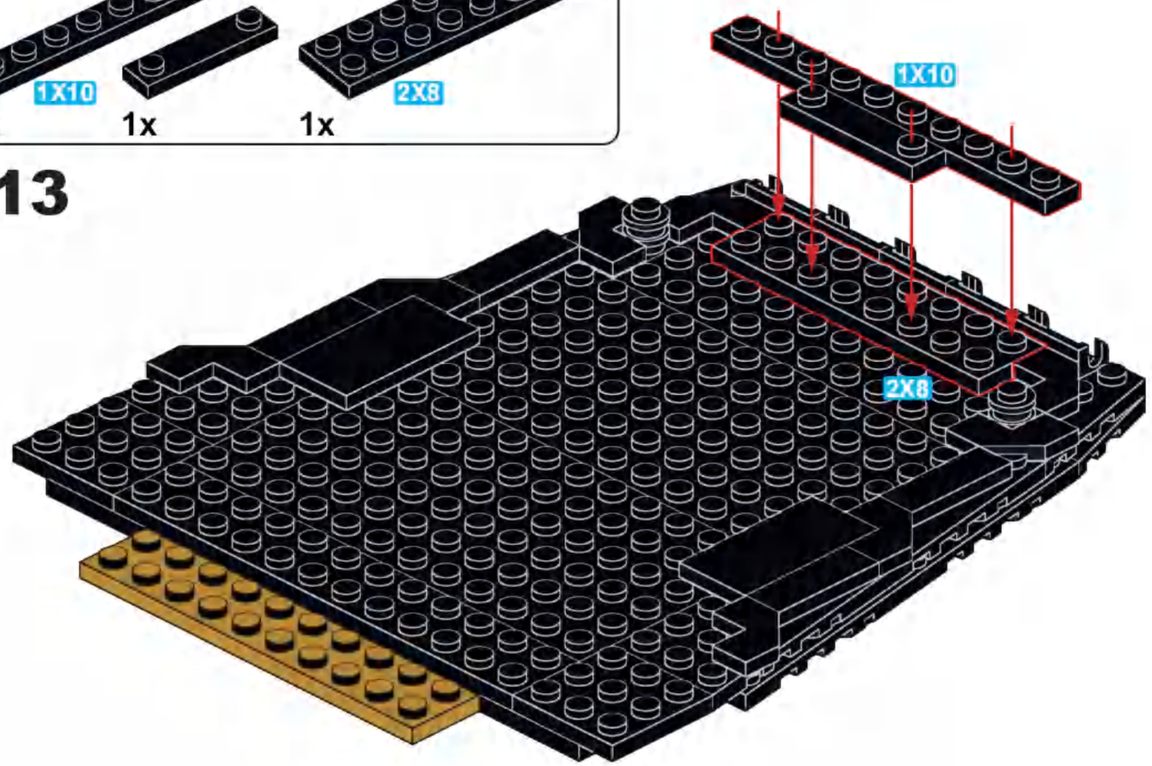

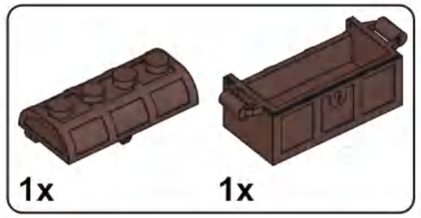

P14

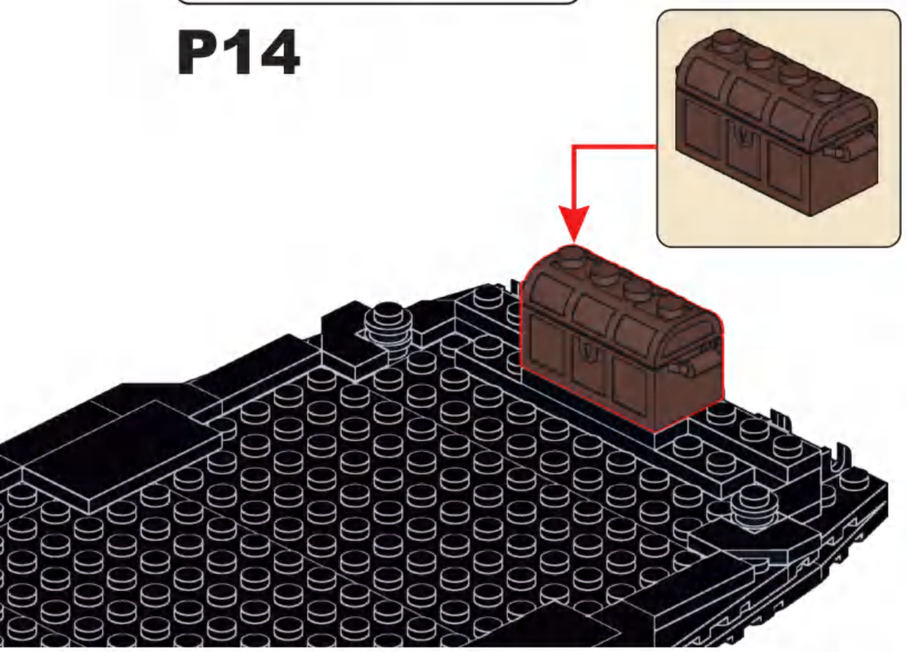

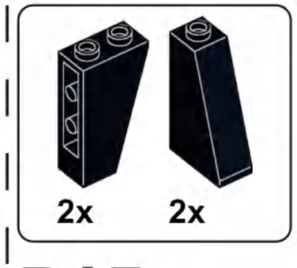

P15

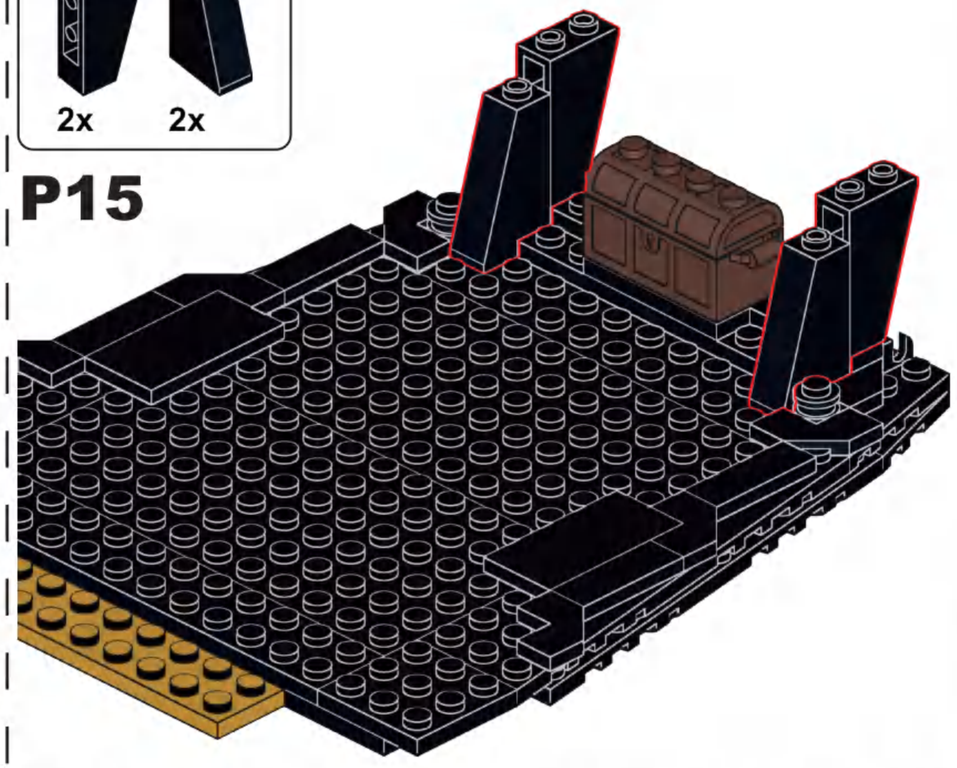

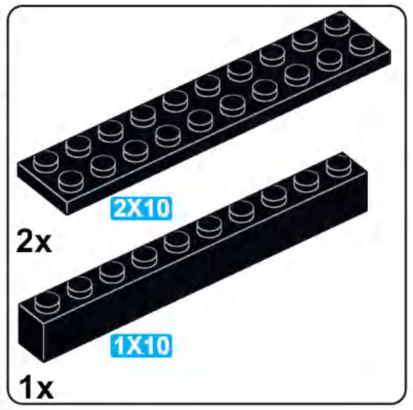

P16

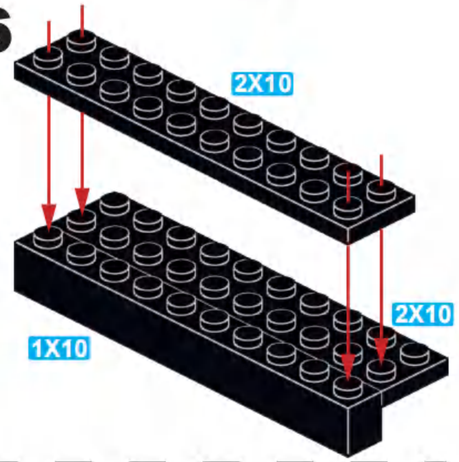

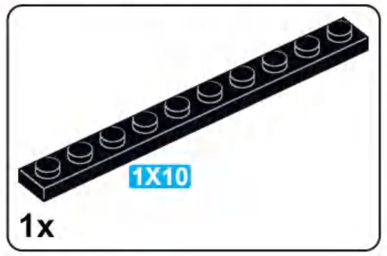

P17

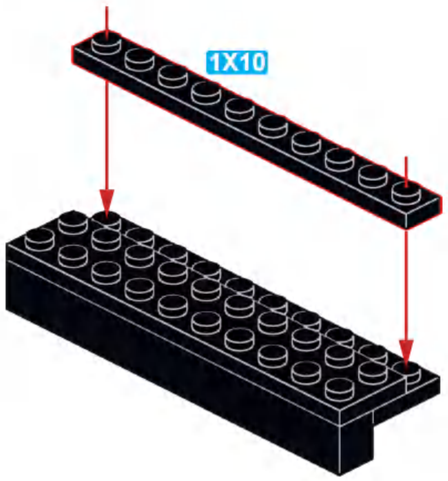

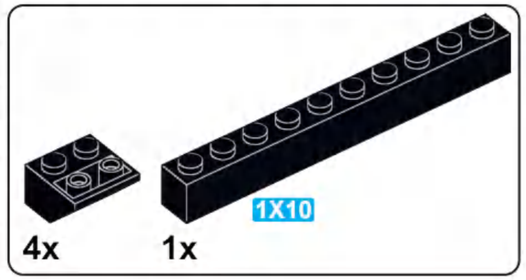

P18

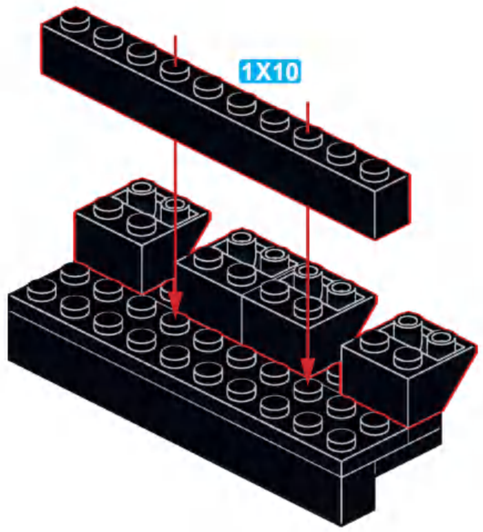

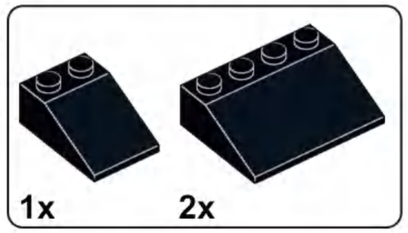

P19

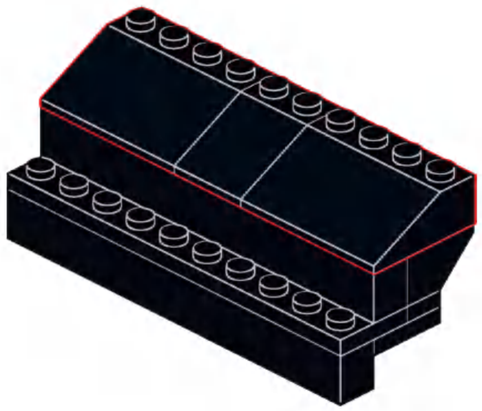

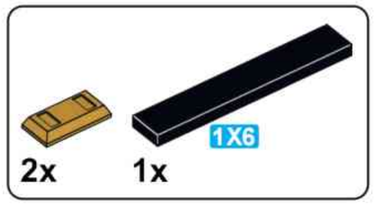

P20

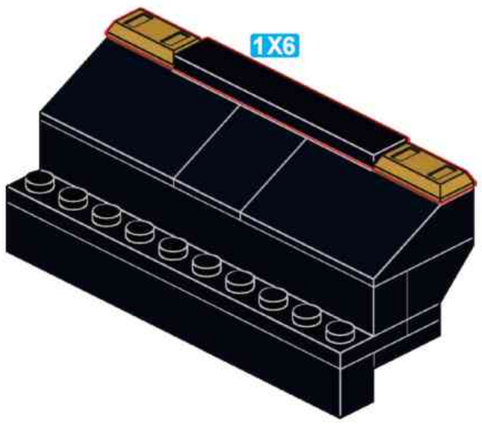

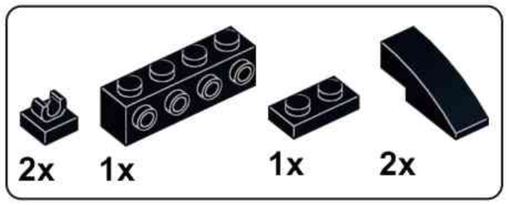

P21

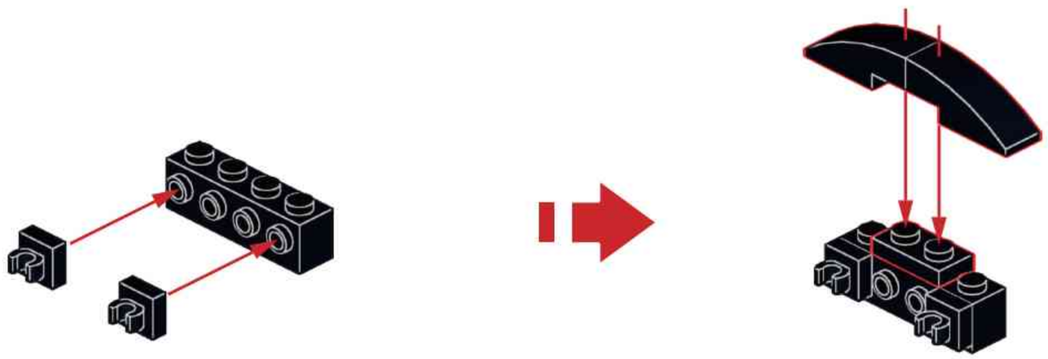

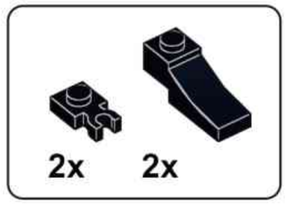

P22

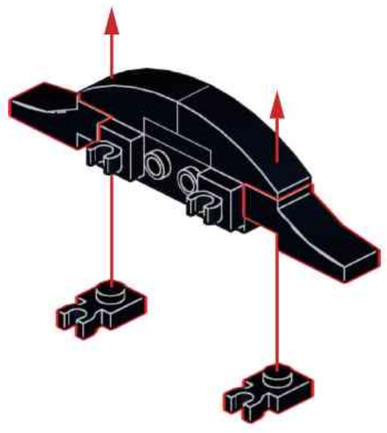

P23

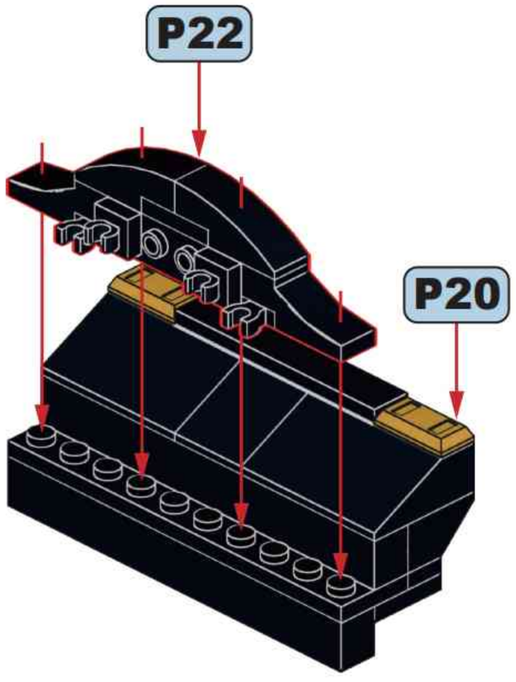

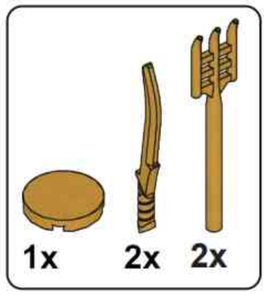

P24

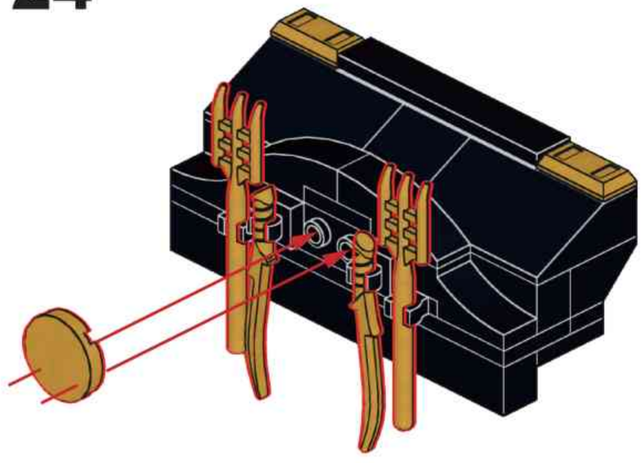

P25

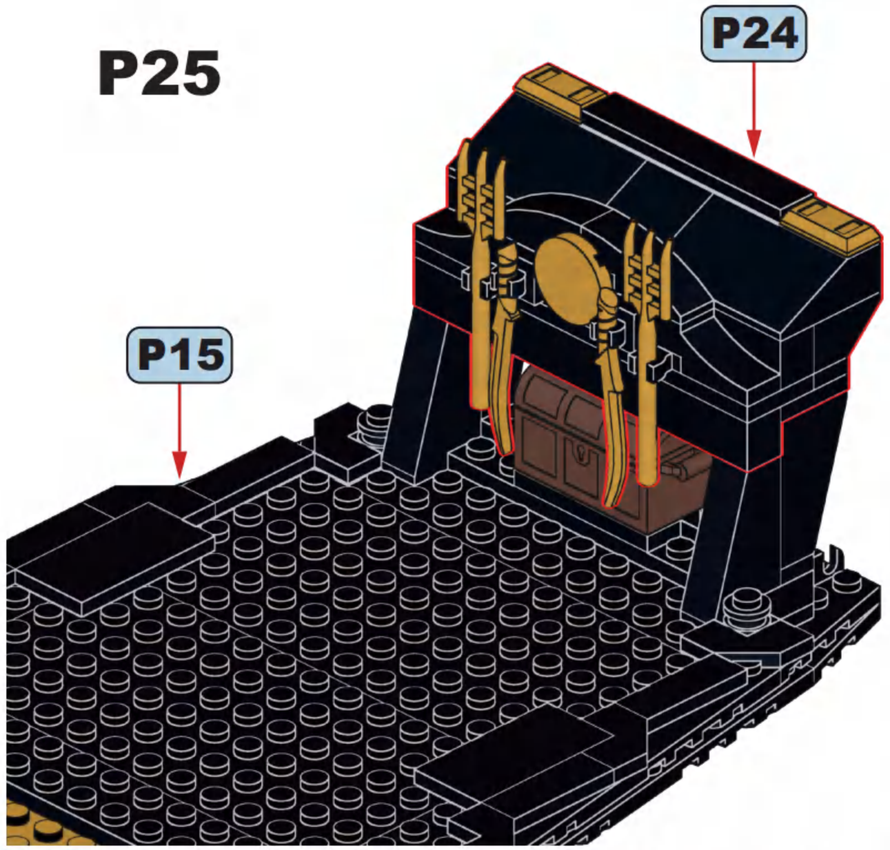

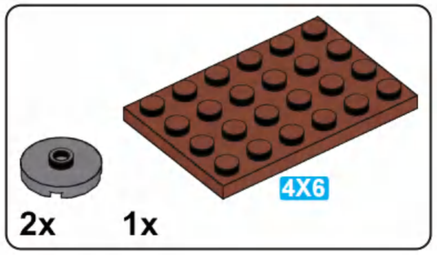

P26

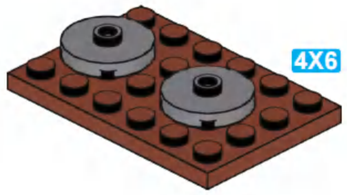

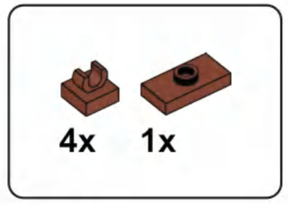

P27

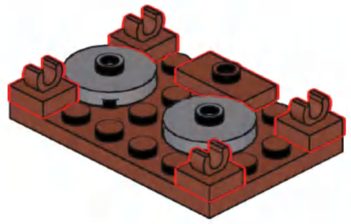

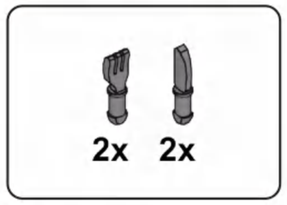

P28

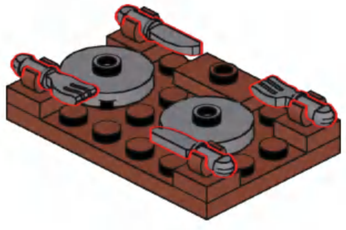

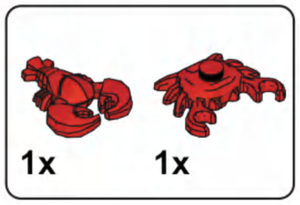

P29

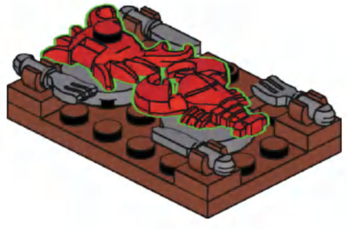

P30

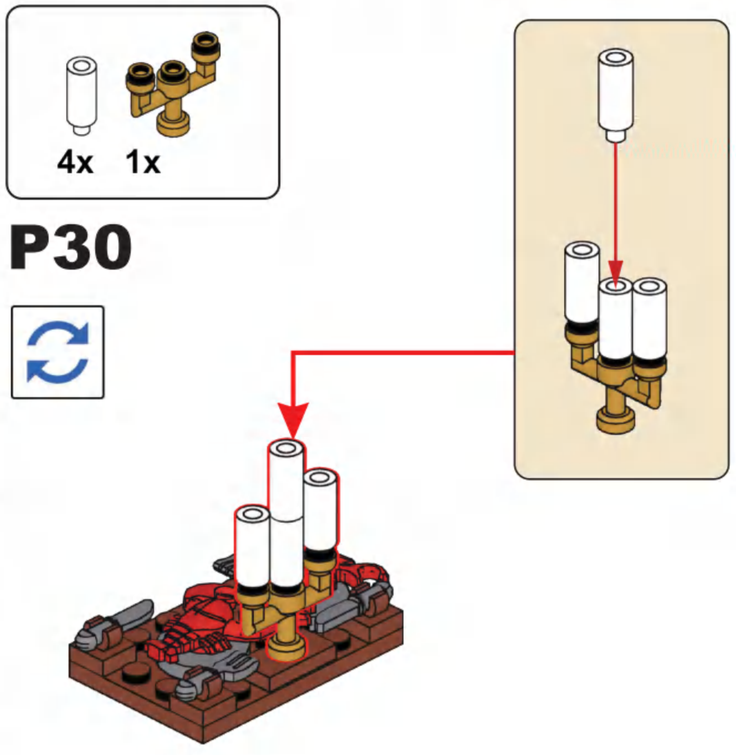

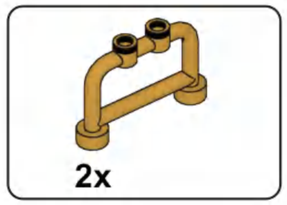

P31

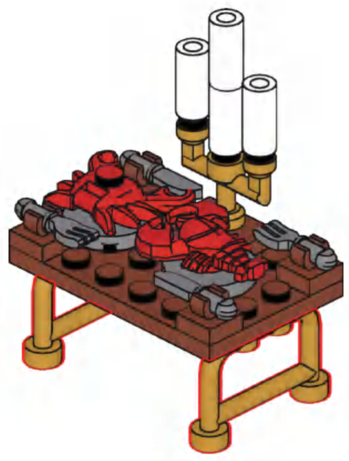

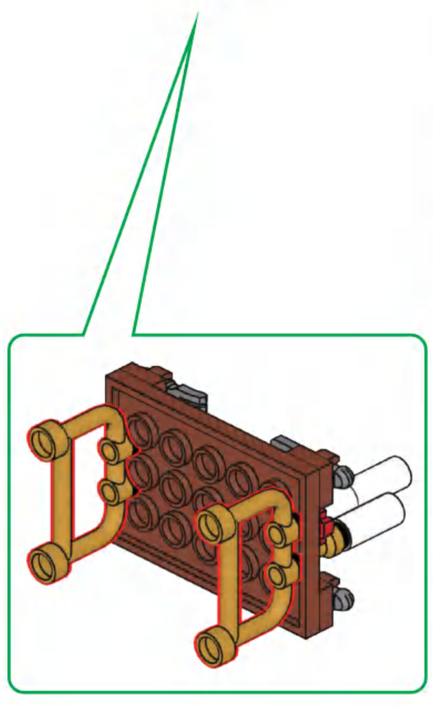

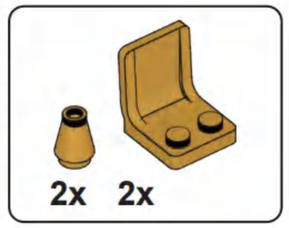

P32

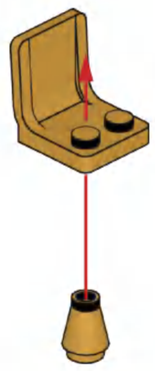

x2

P33

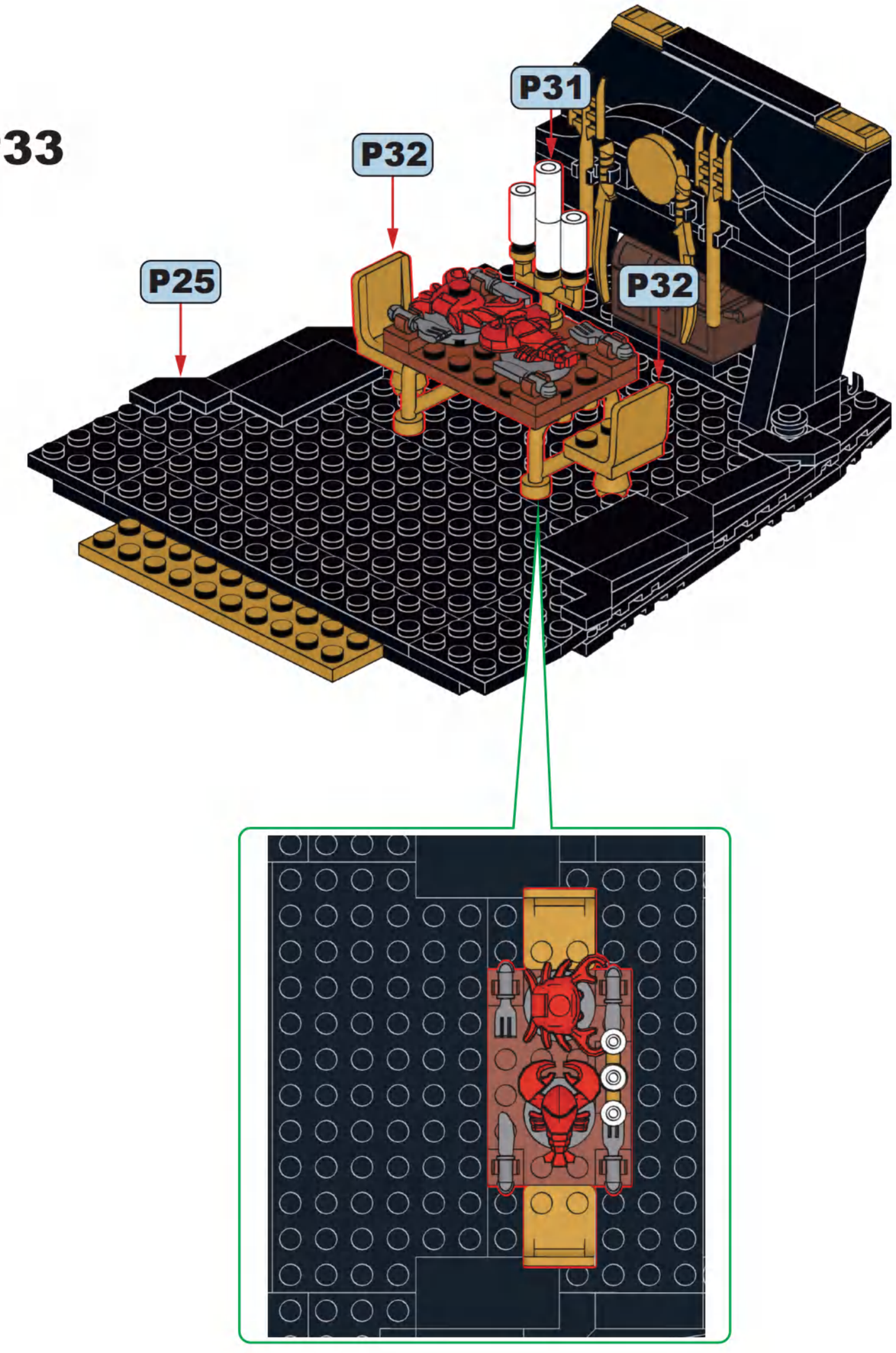

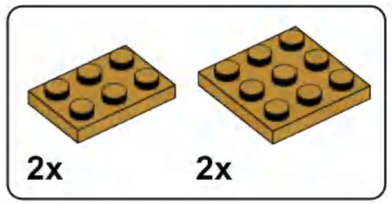

P34

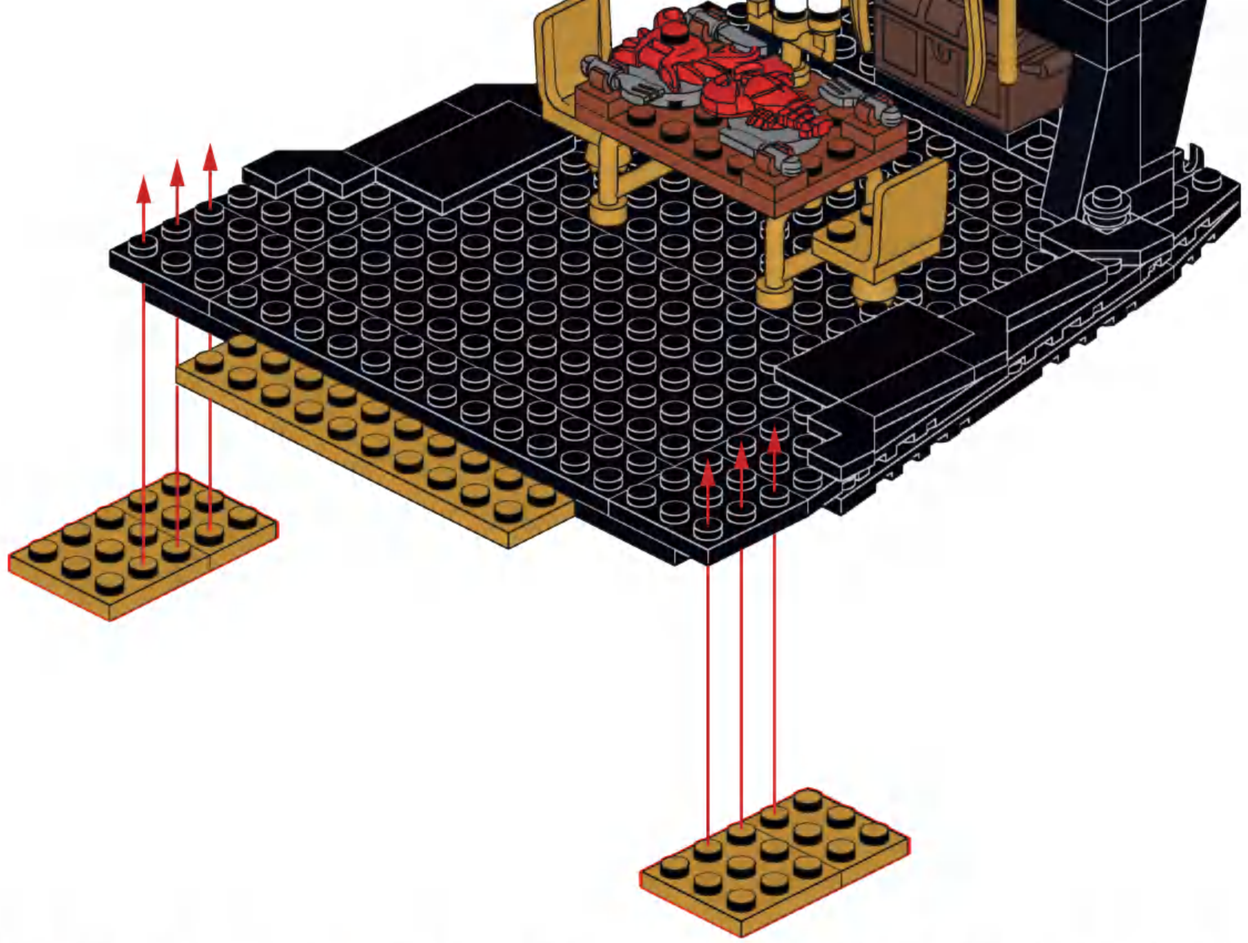

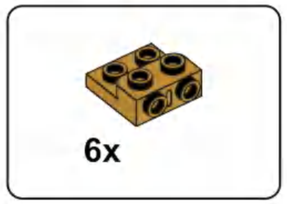

P35

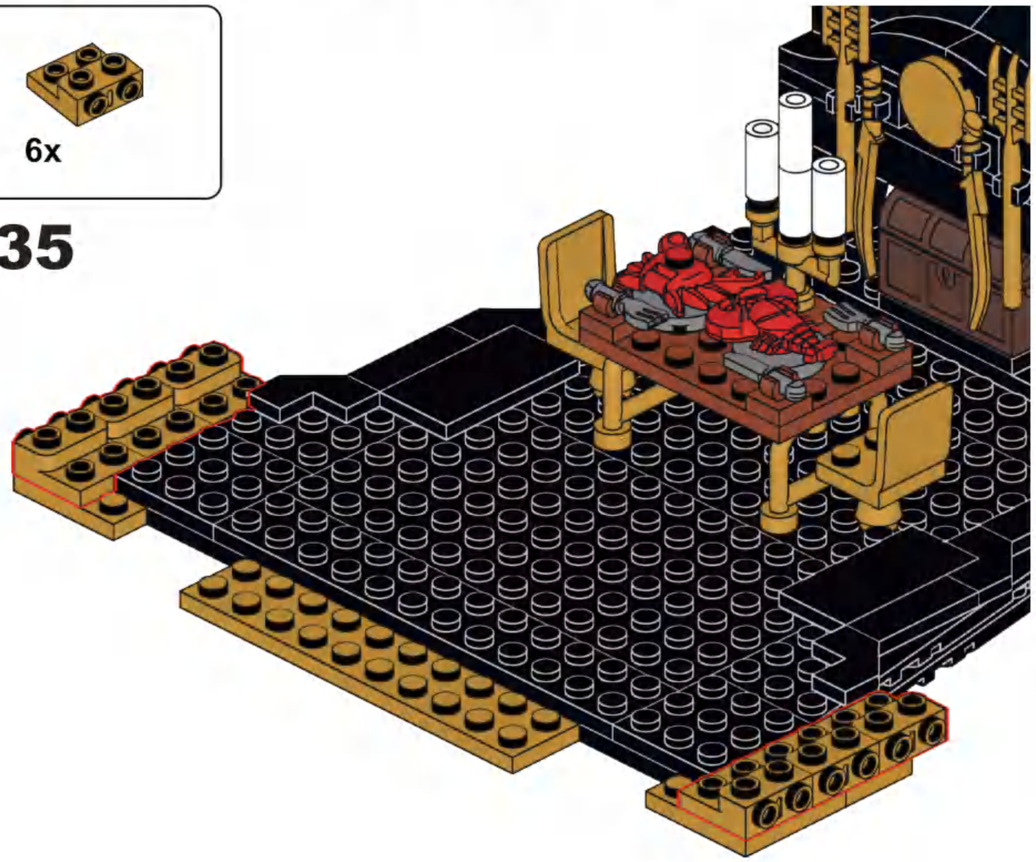

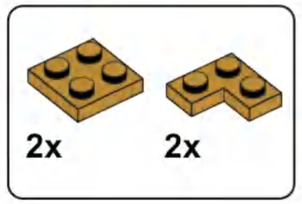

P36

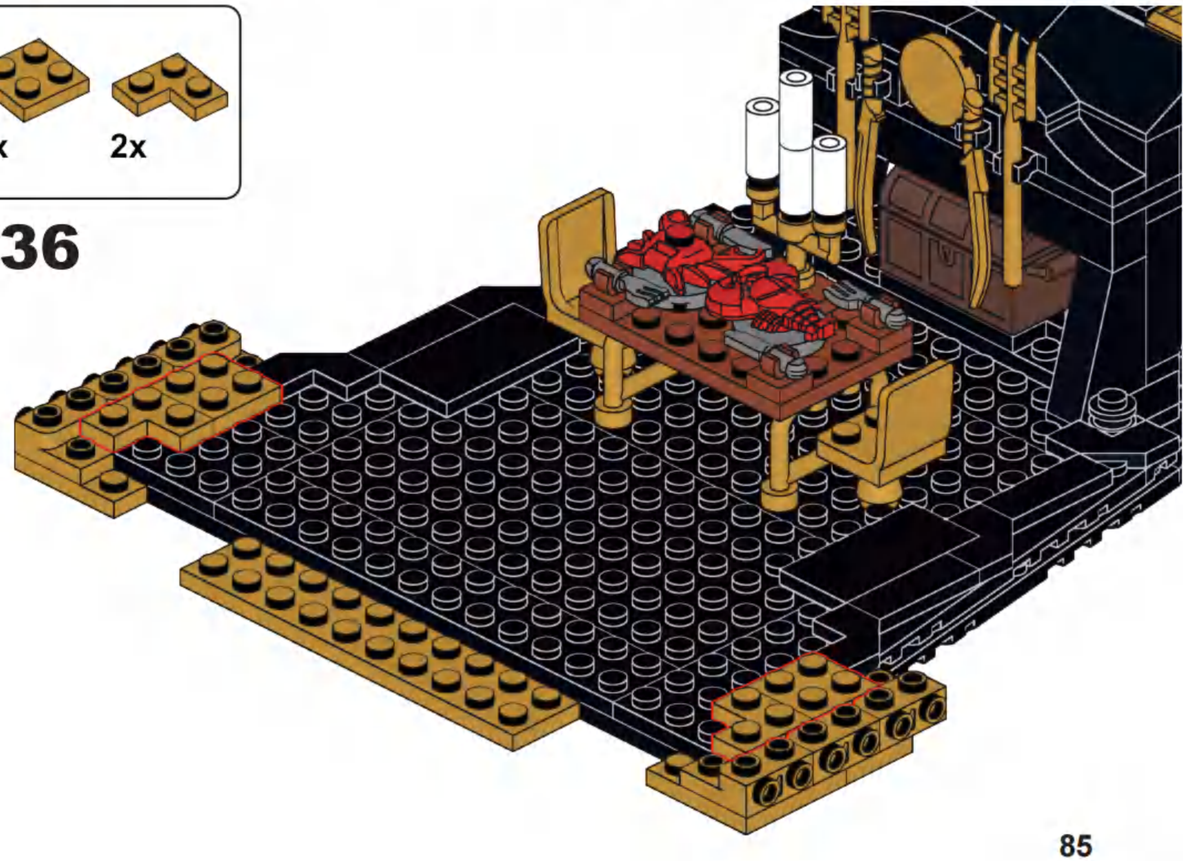

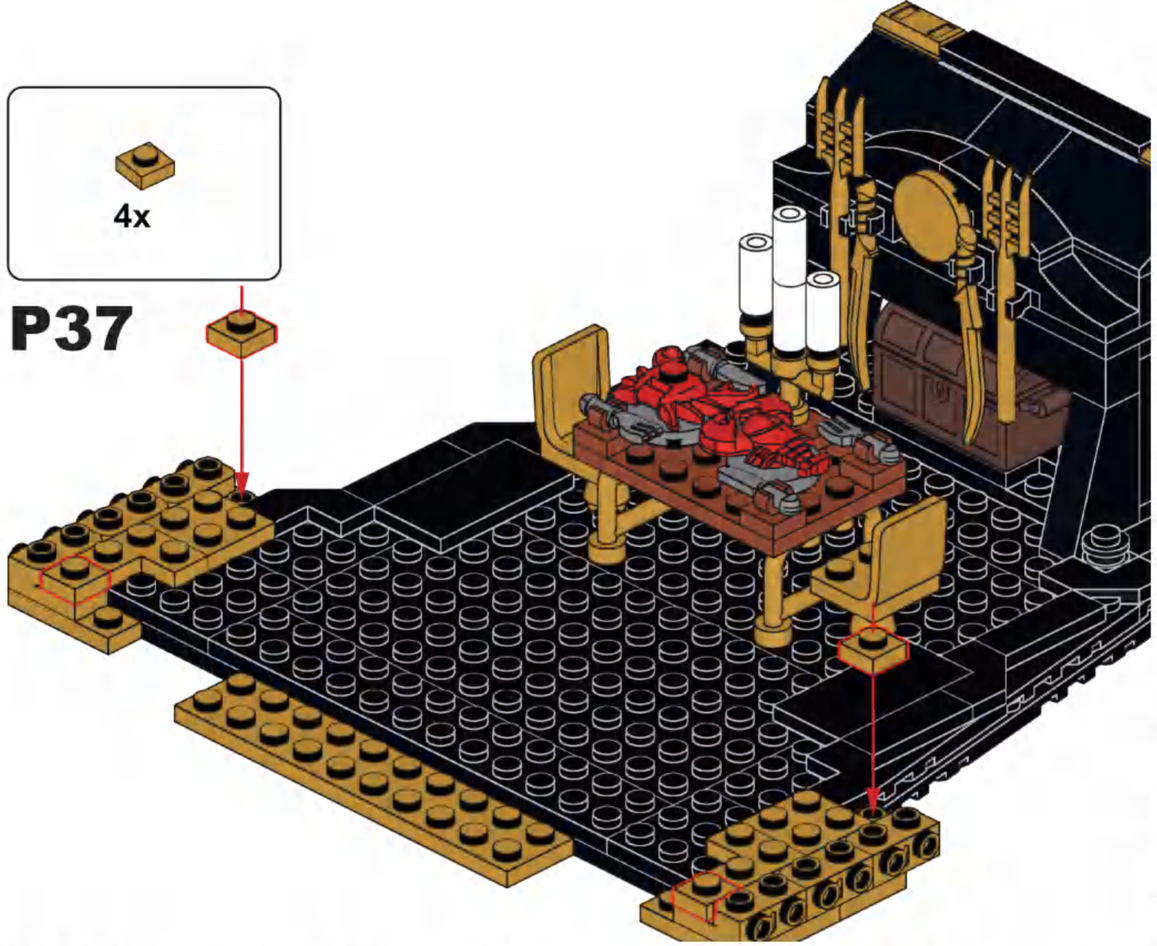
4x
P37

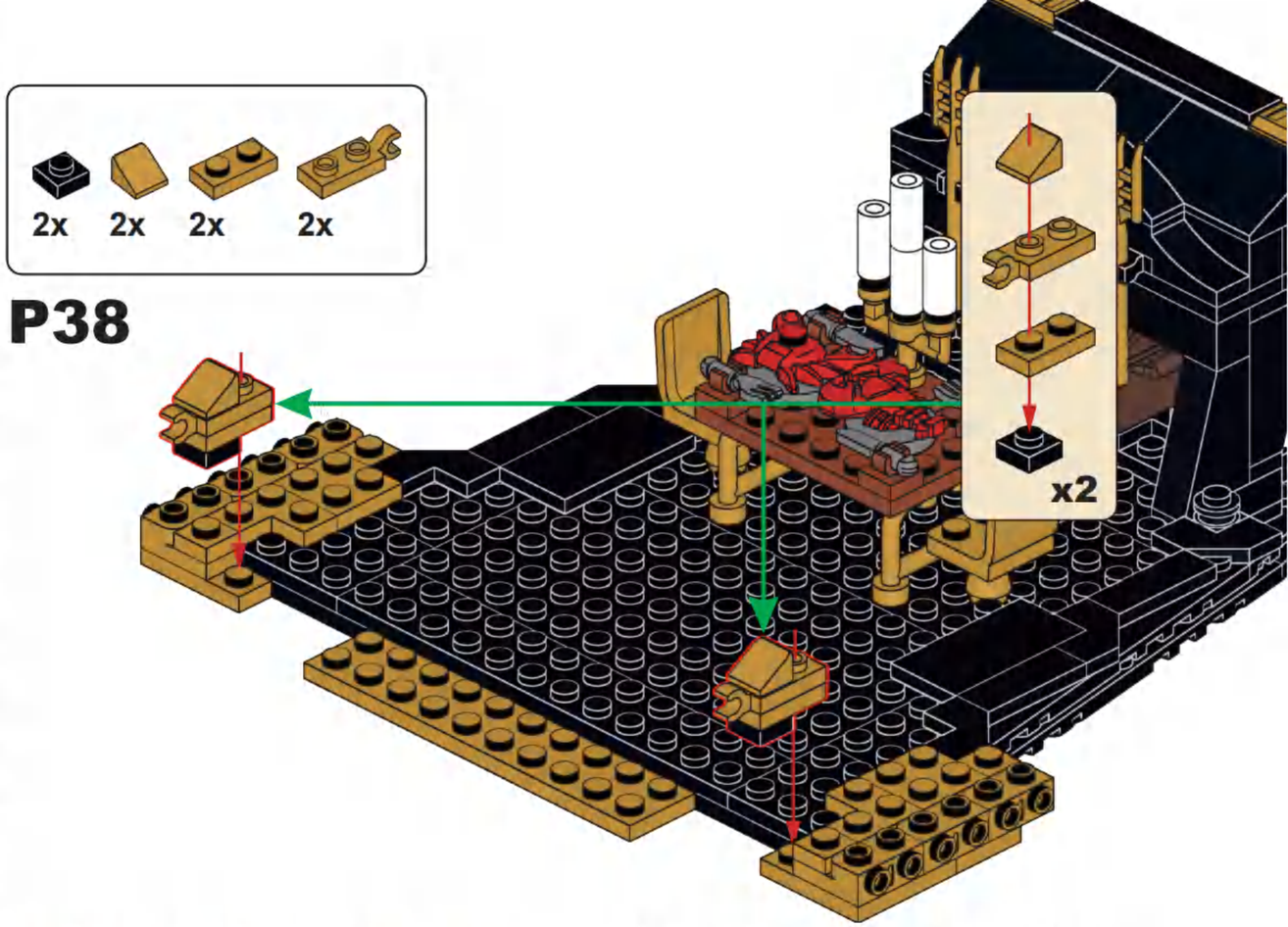
2x
2x
2x
2x
P38
x2

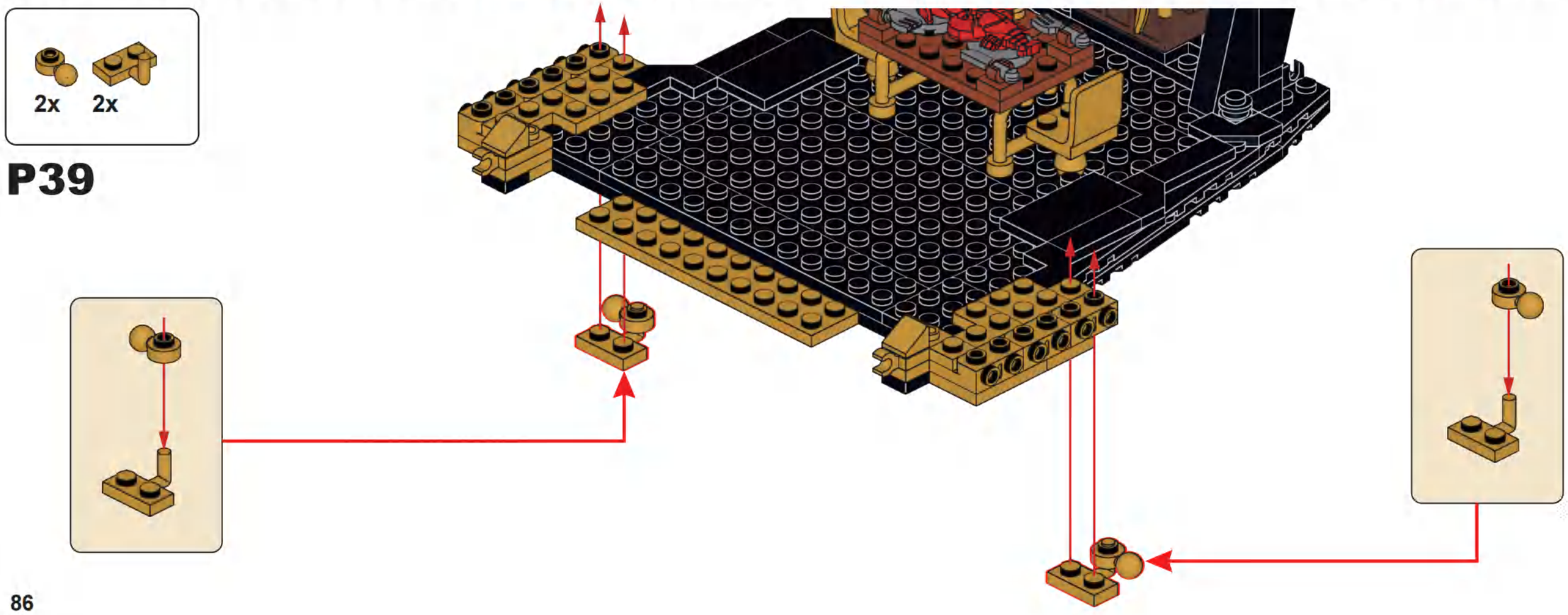
2x
2x
P39

P40

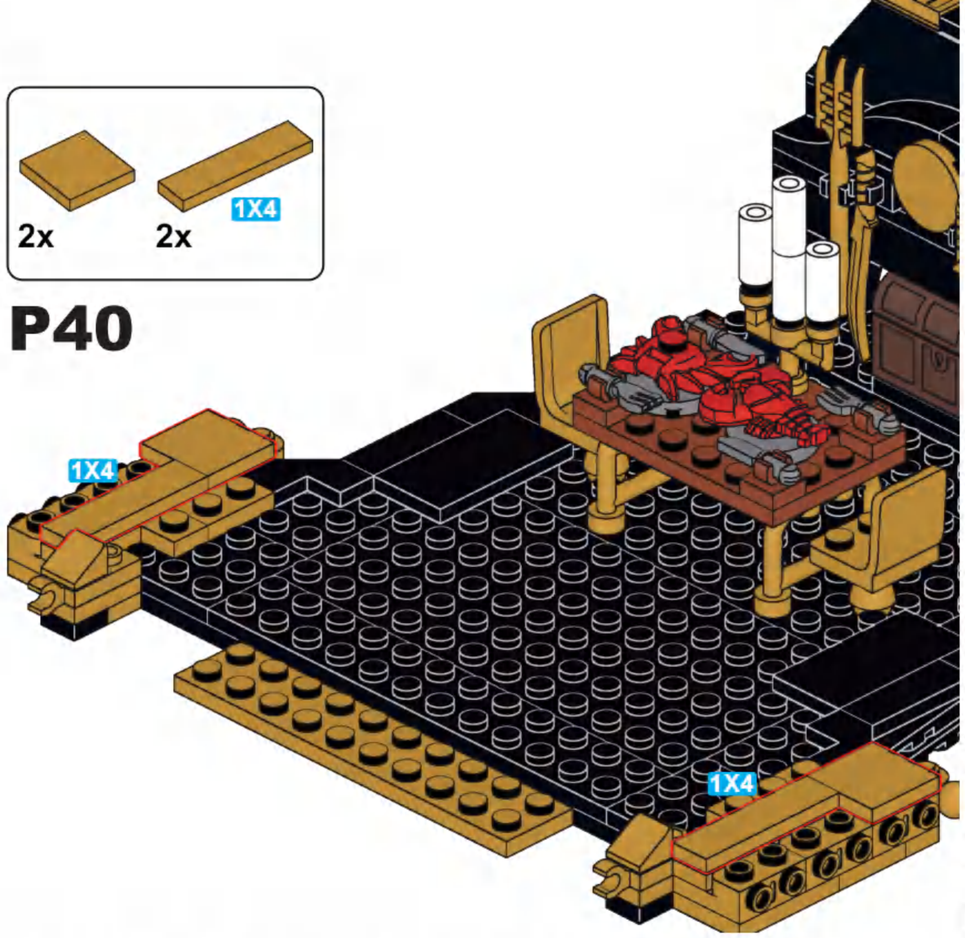

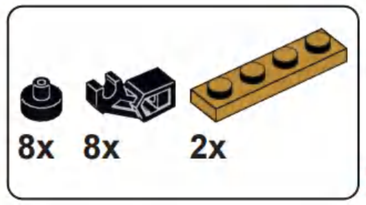

P41

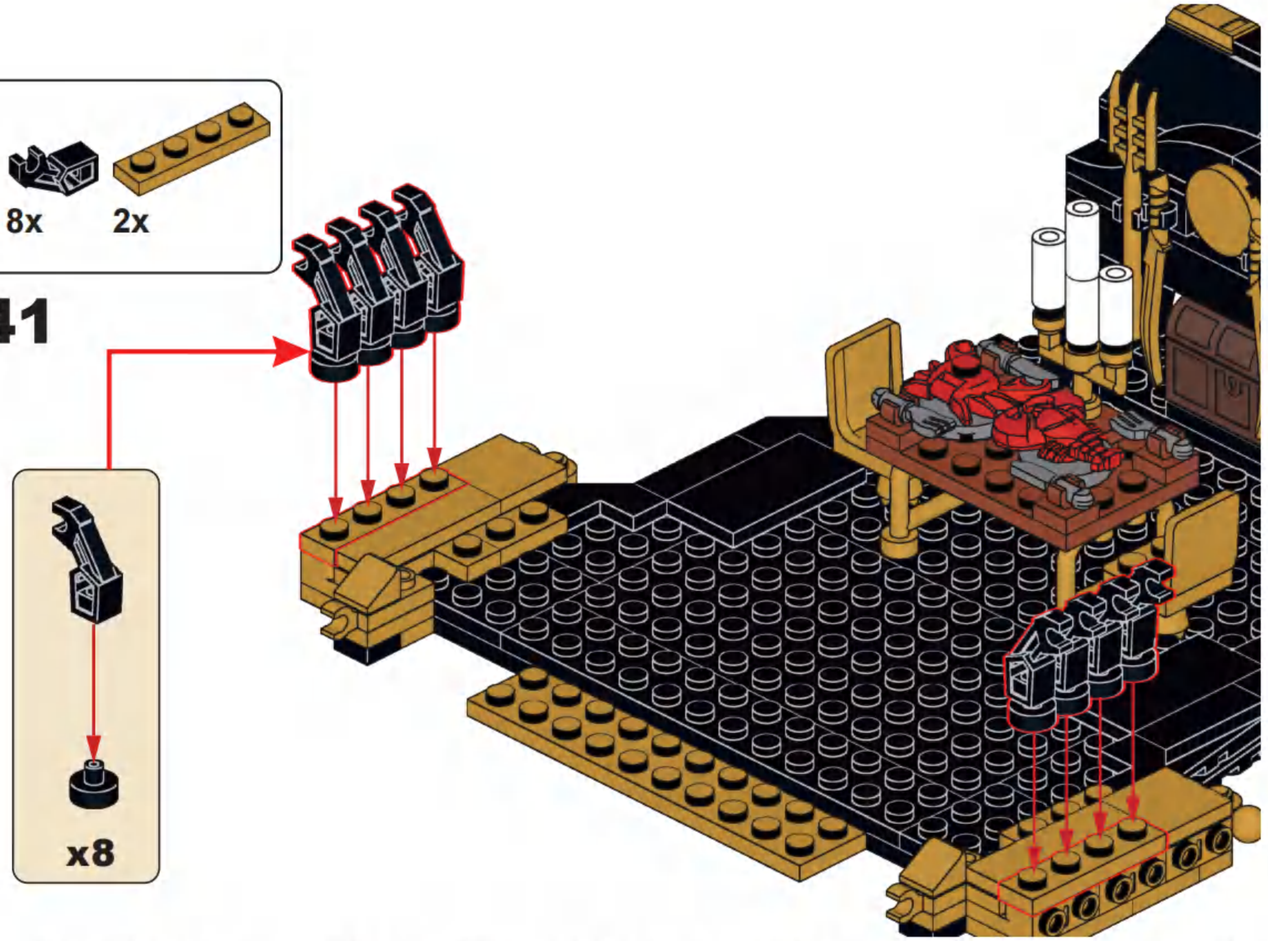

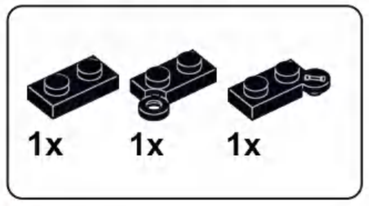

P42

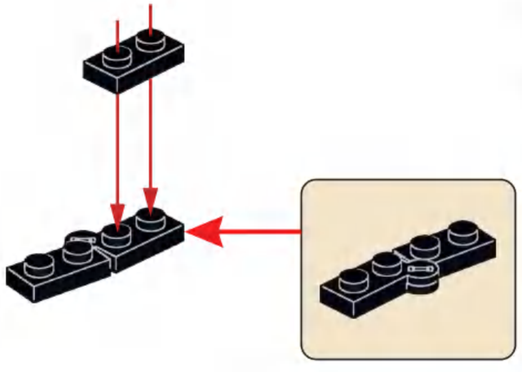

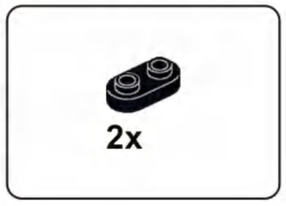

P43

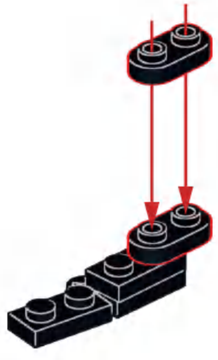

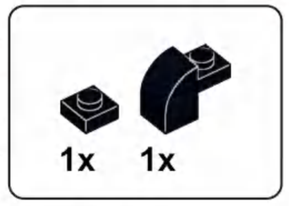

P44

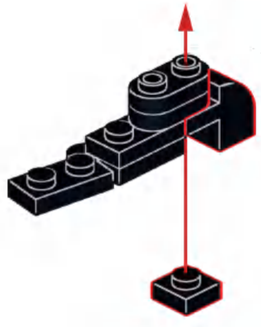

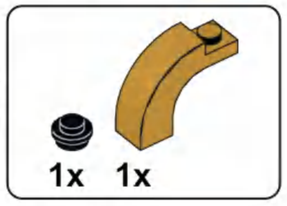

P45

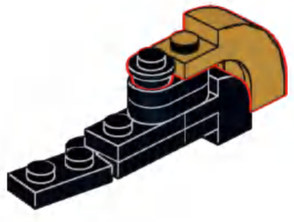

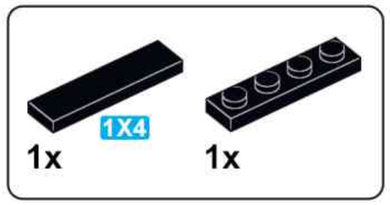

P46

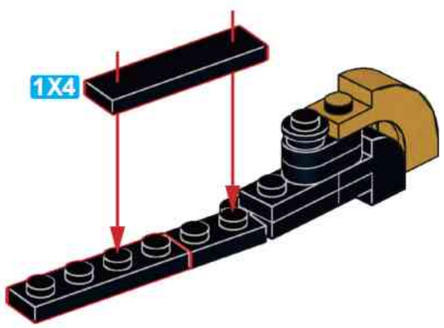

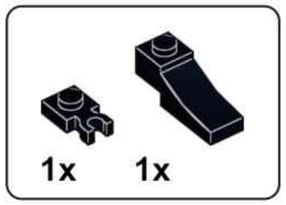

P47

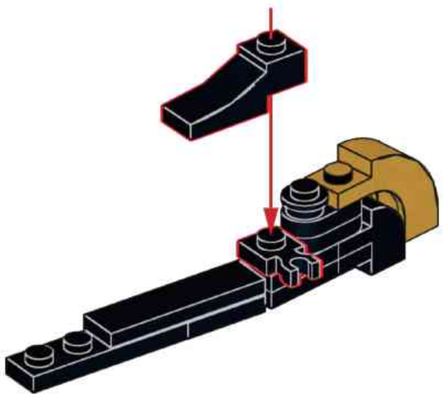

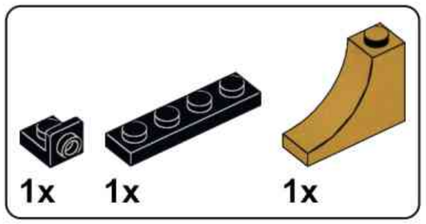

P48

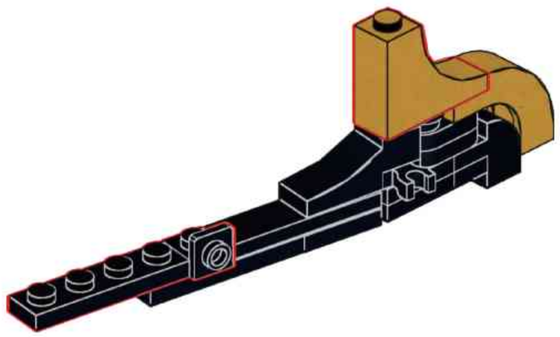

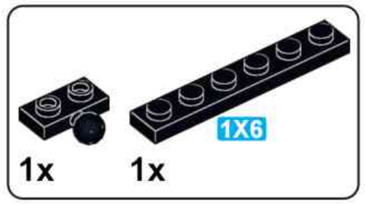

P49

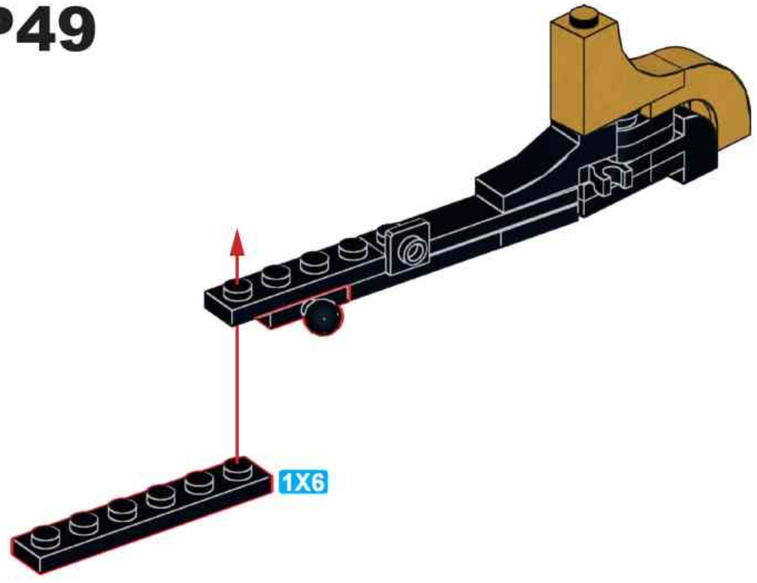

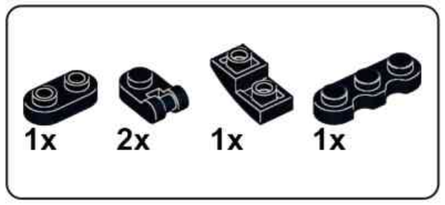

P50

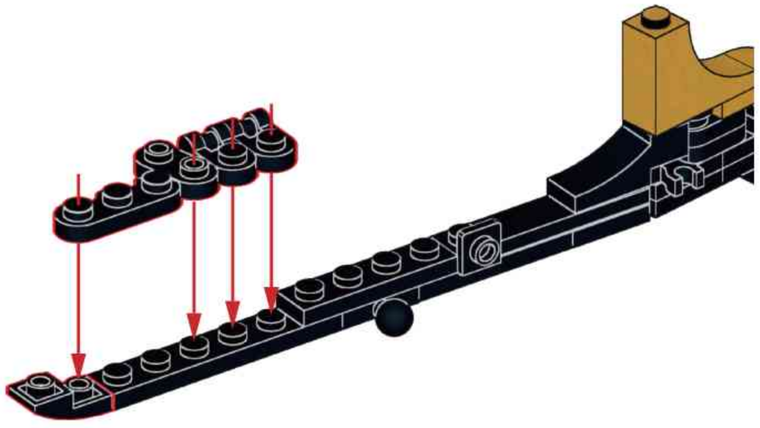

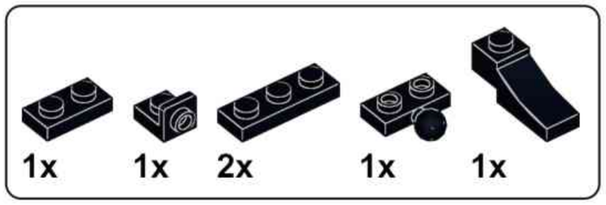

P51

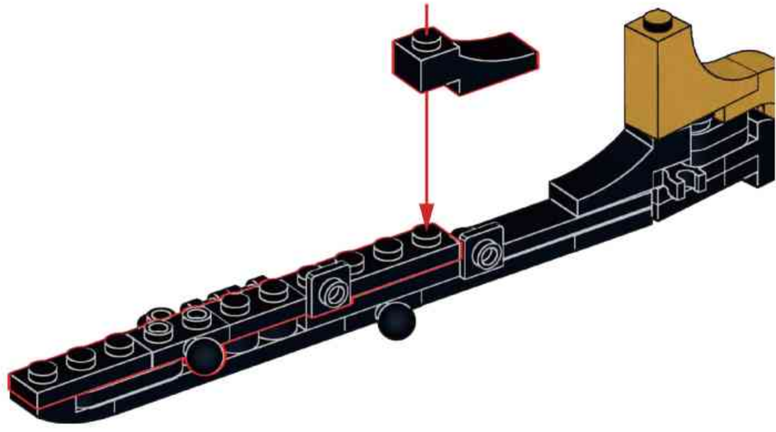

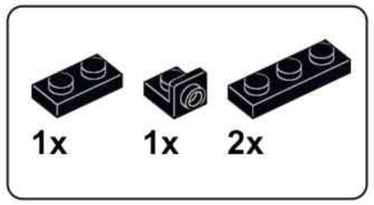

P52

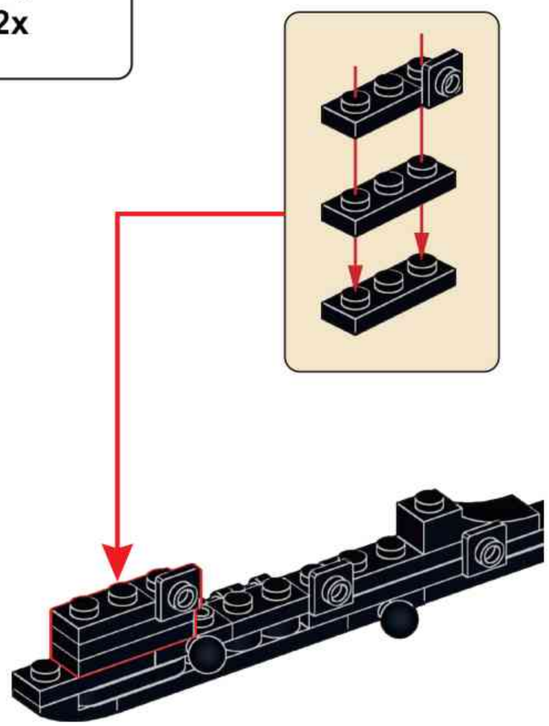

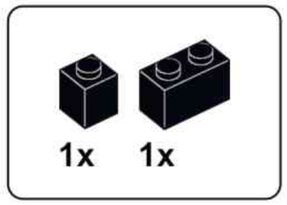

P53

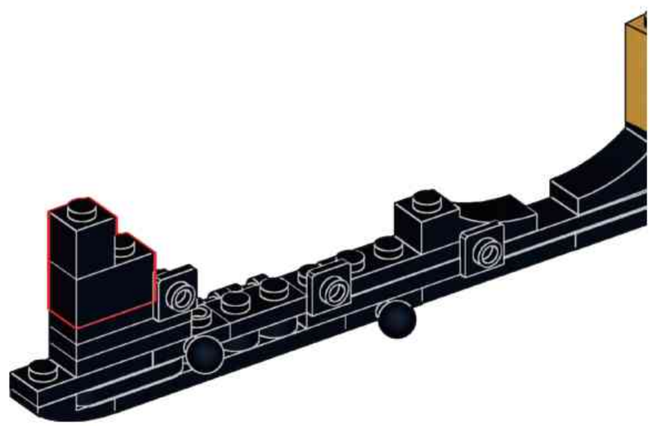

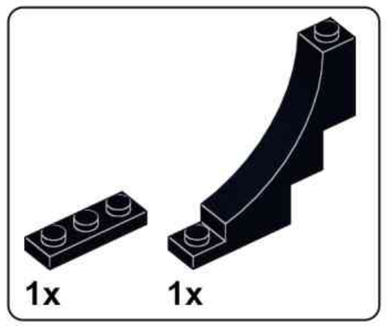

P54

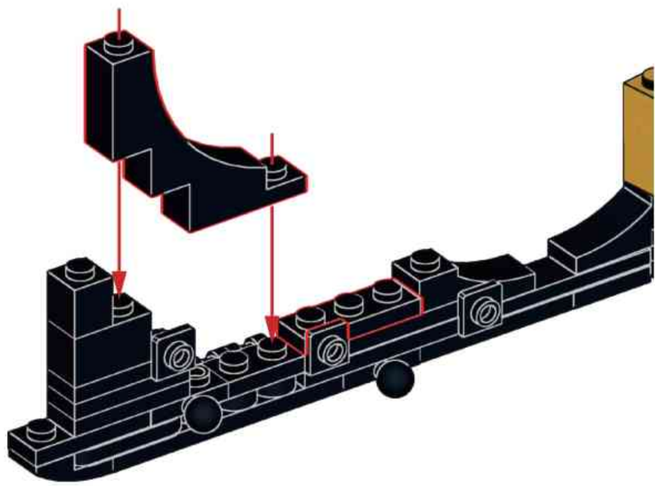

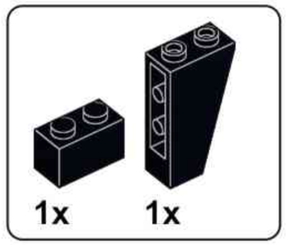

P55

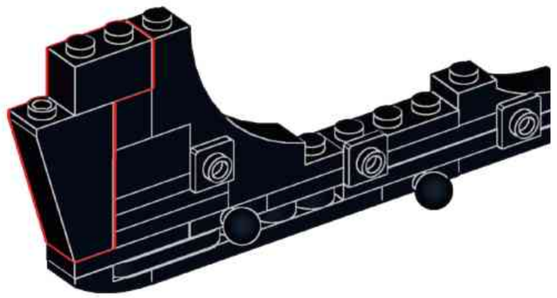

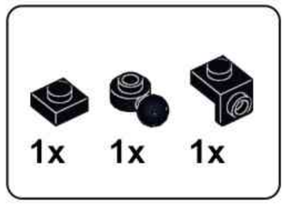

P56

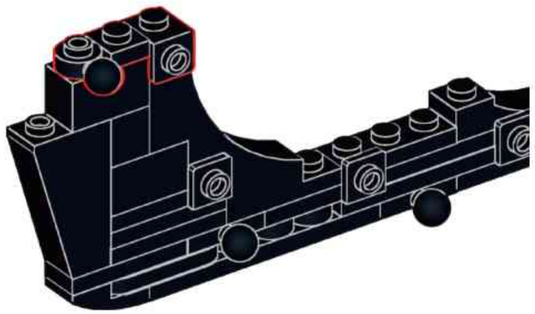

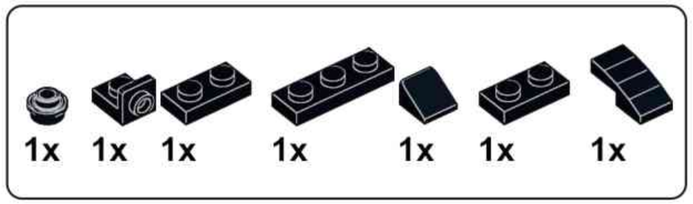

P57

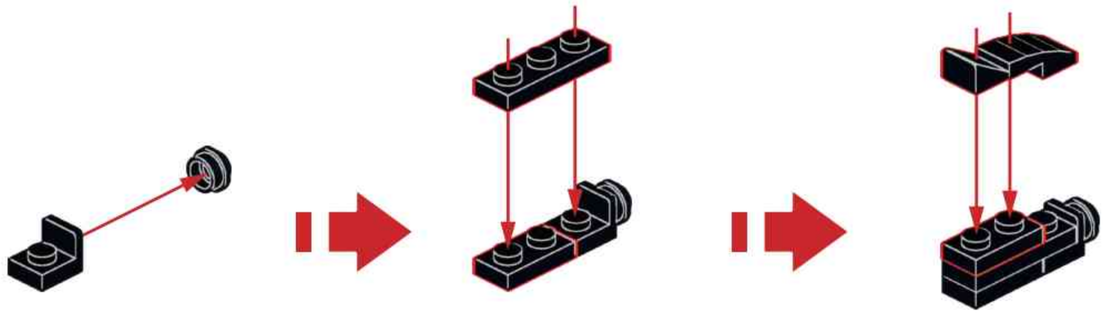

P58

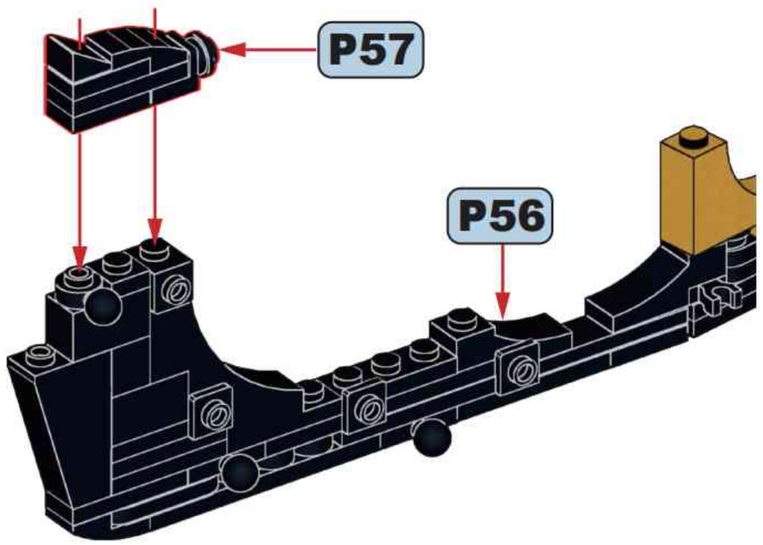

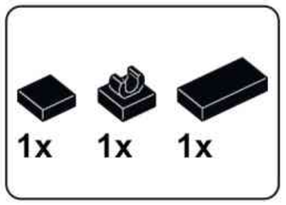

P59

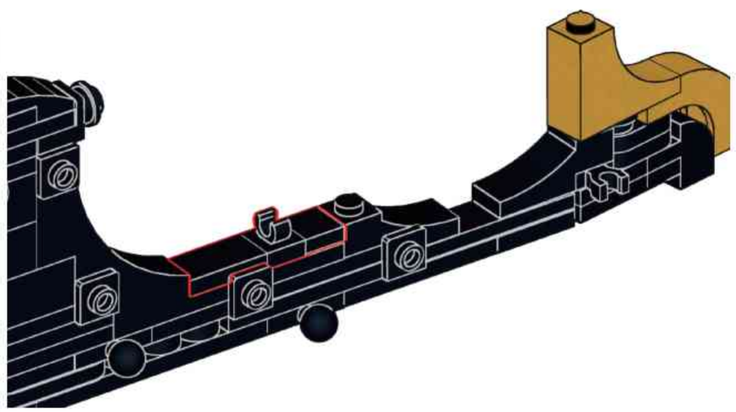

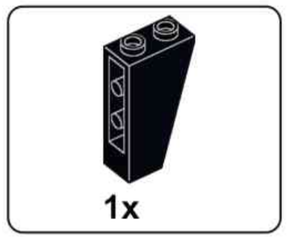

P60

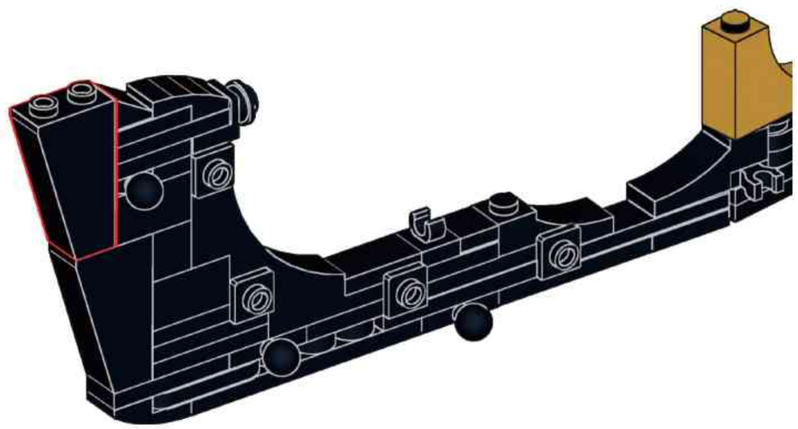

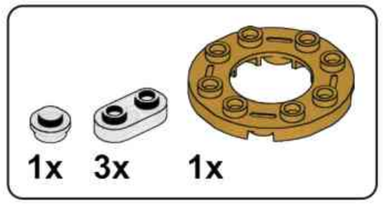

P61

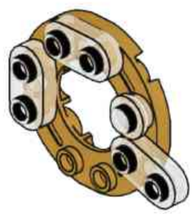

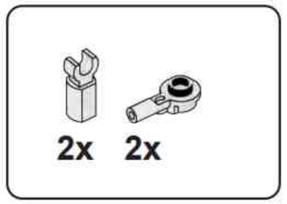

P62

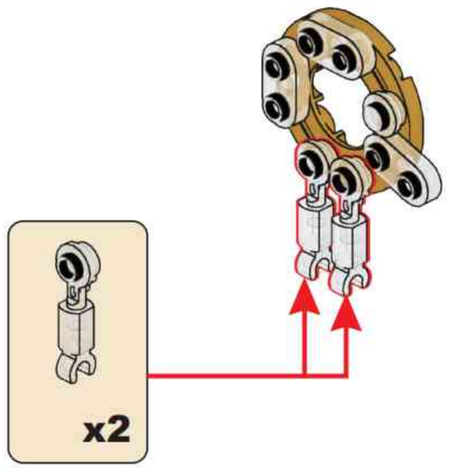

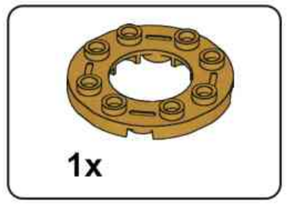

P63

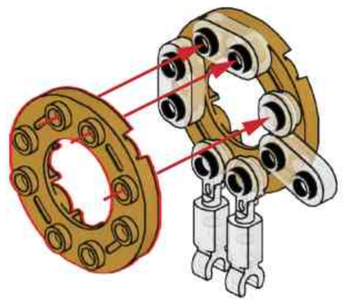

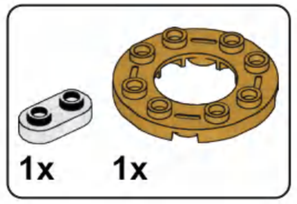

P64

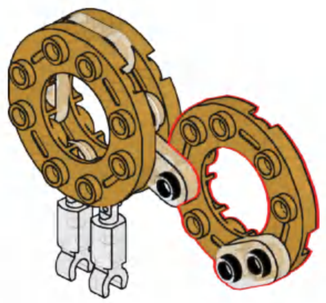

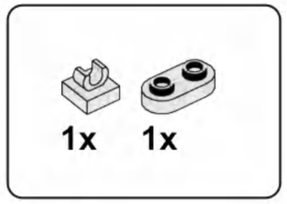

P65

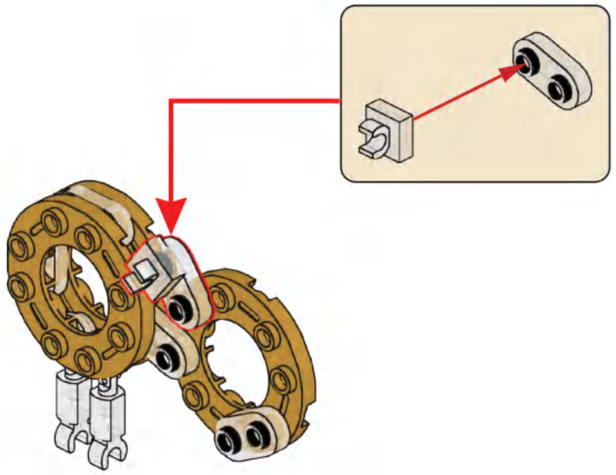

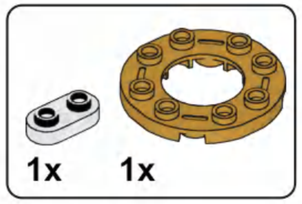

P66

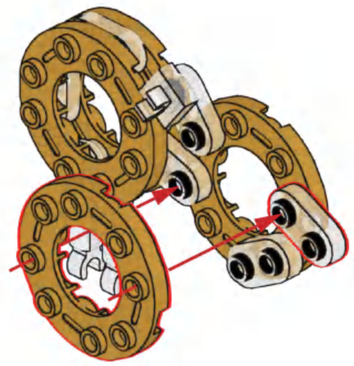

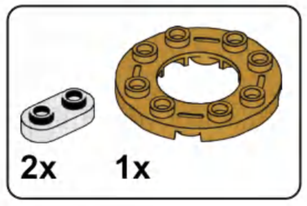

P67

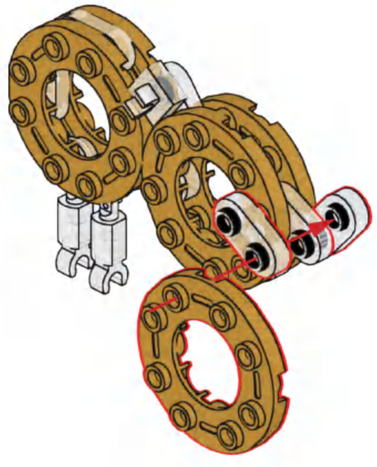

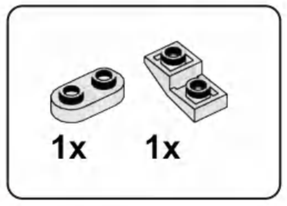

P68

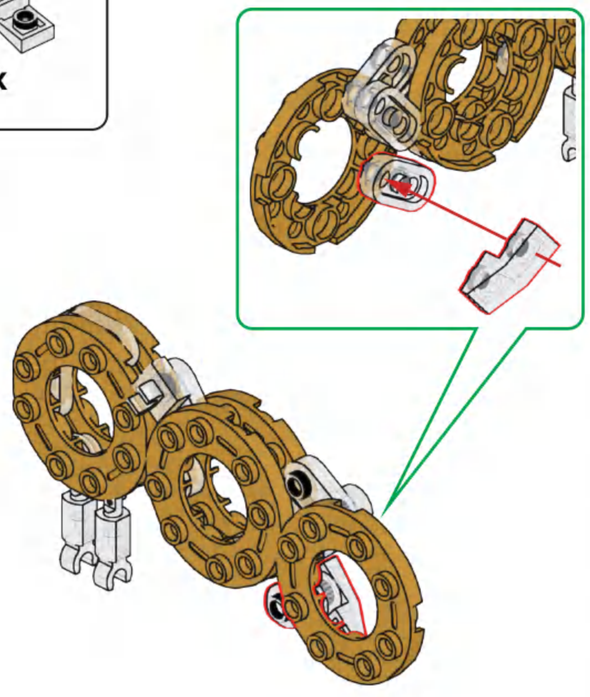

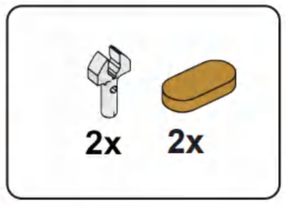

P69

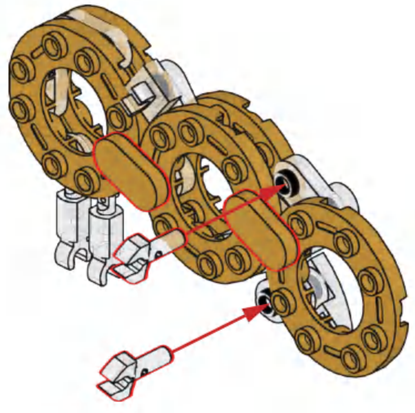

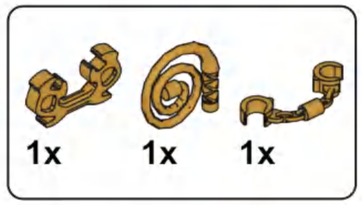

P70

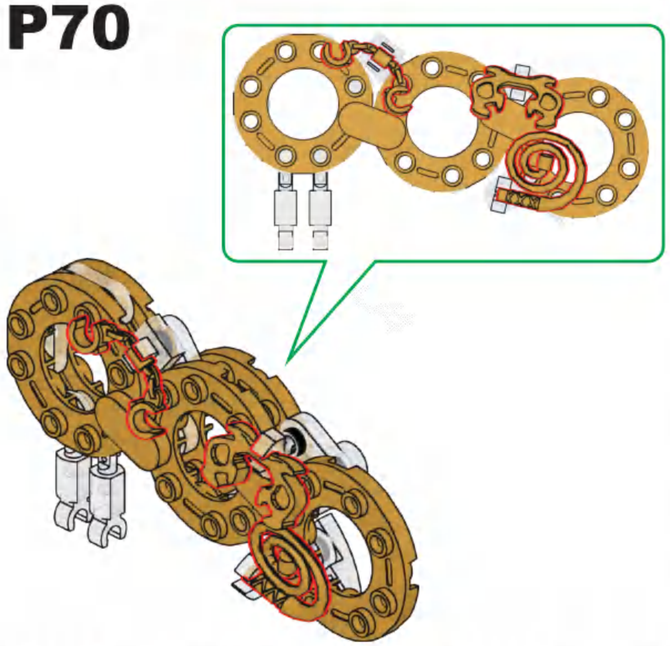

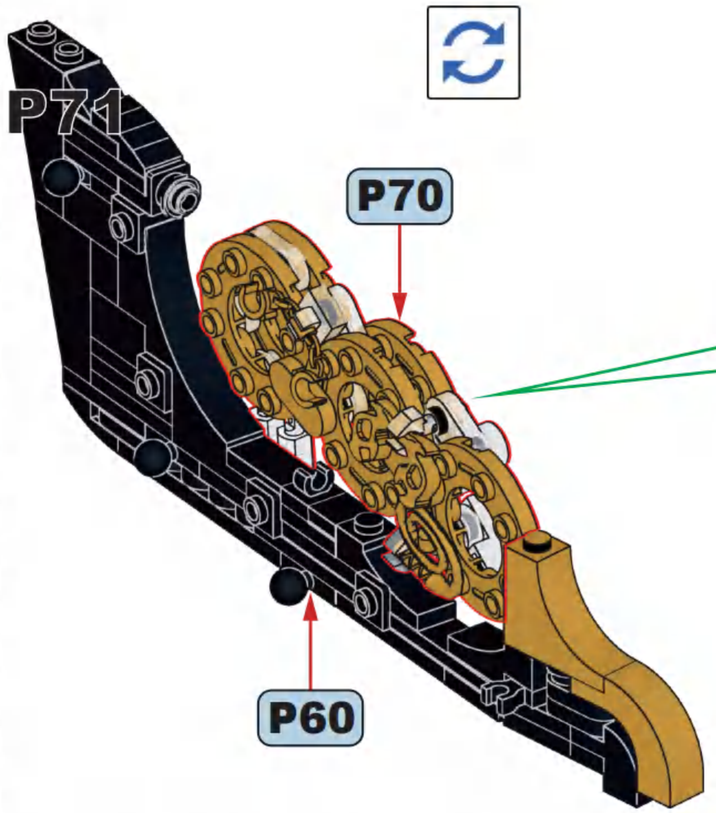

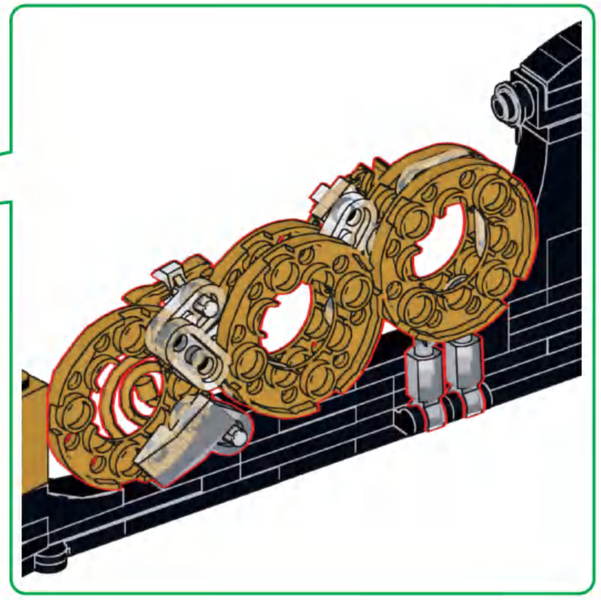

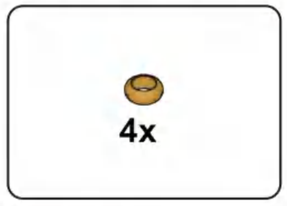

P72

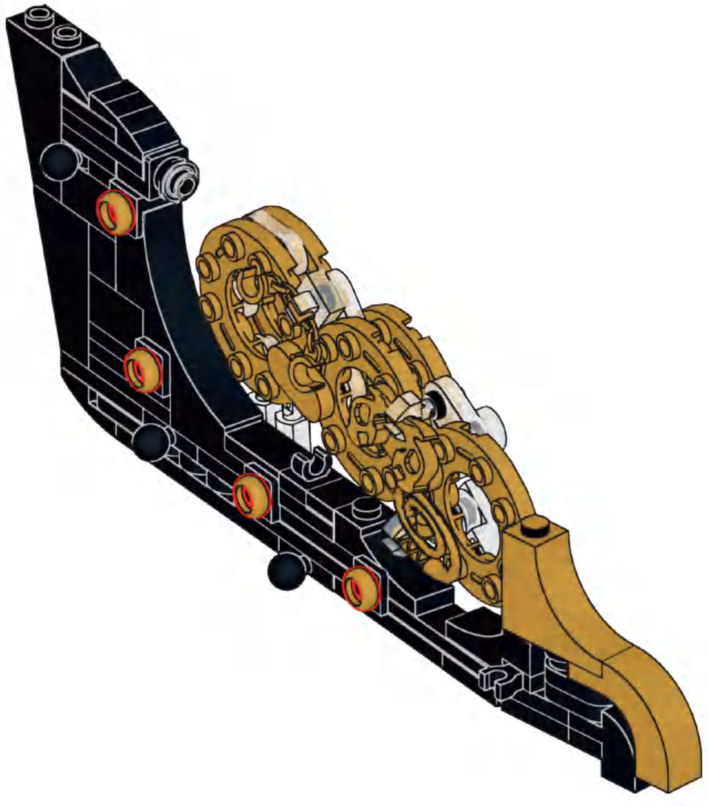

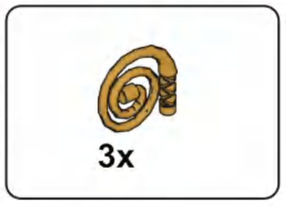

P73

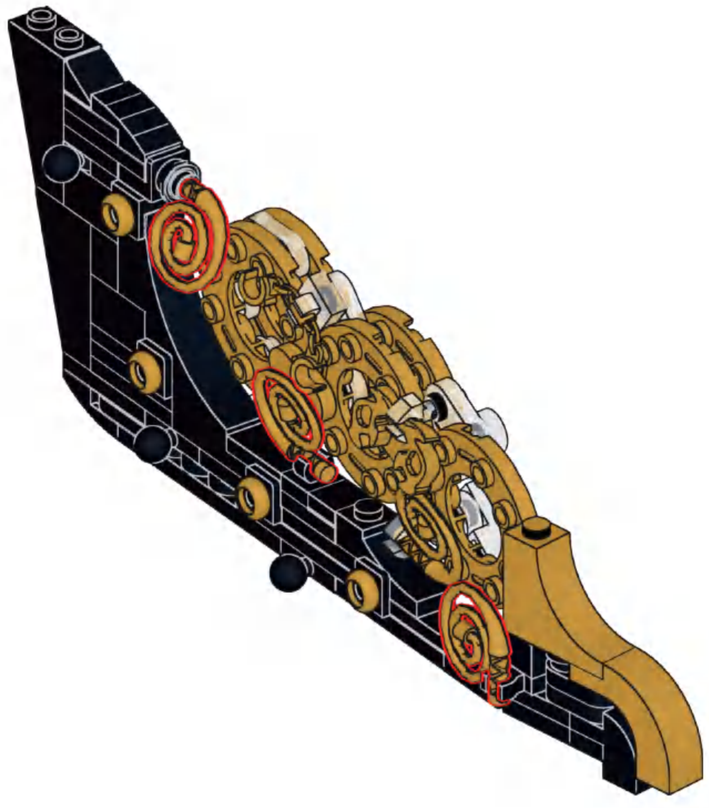

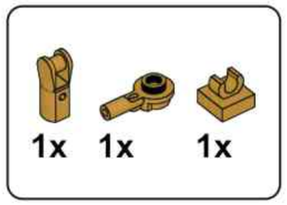

P74

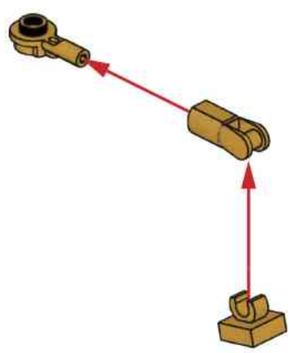

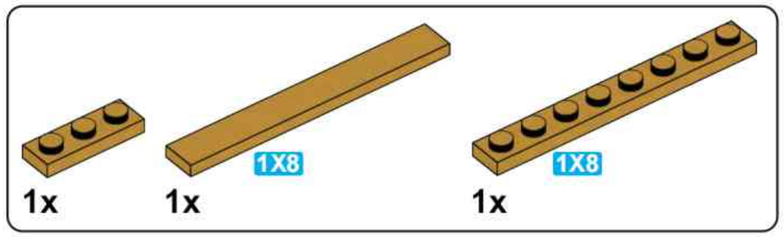

P75

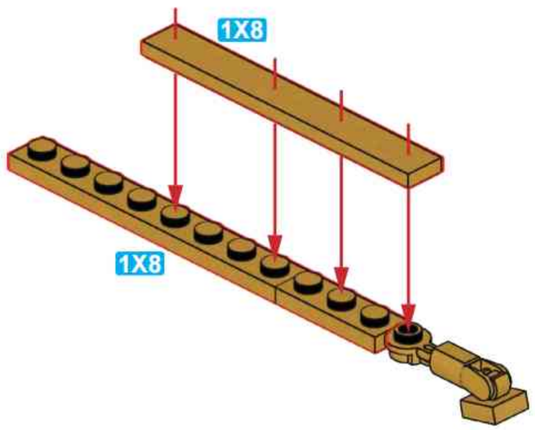

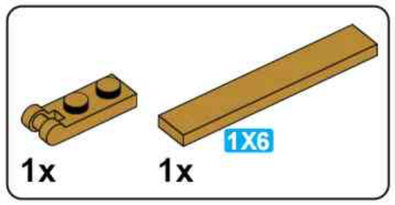

P76

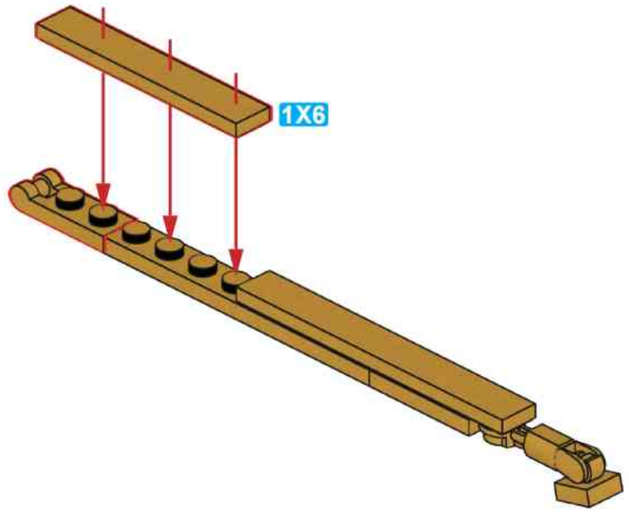

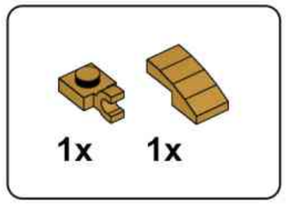

P77

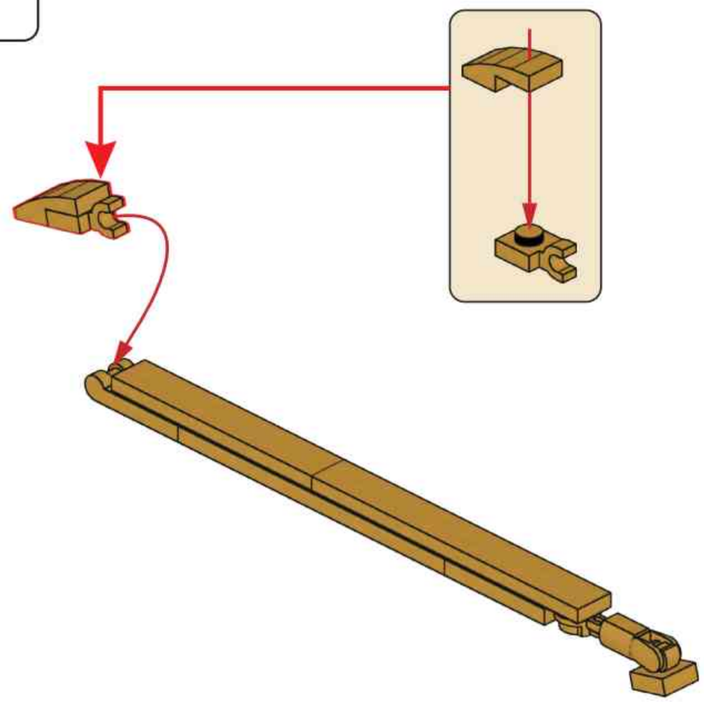

P78

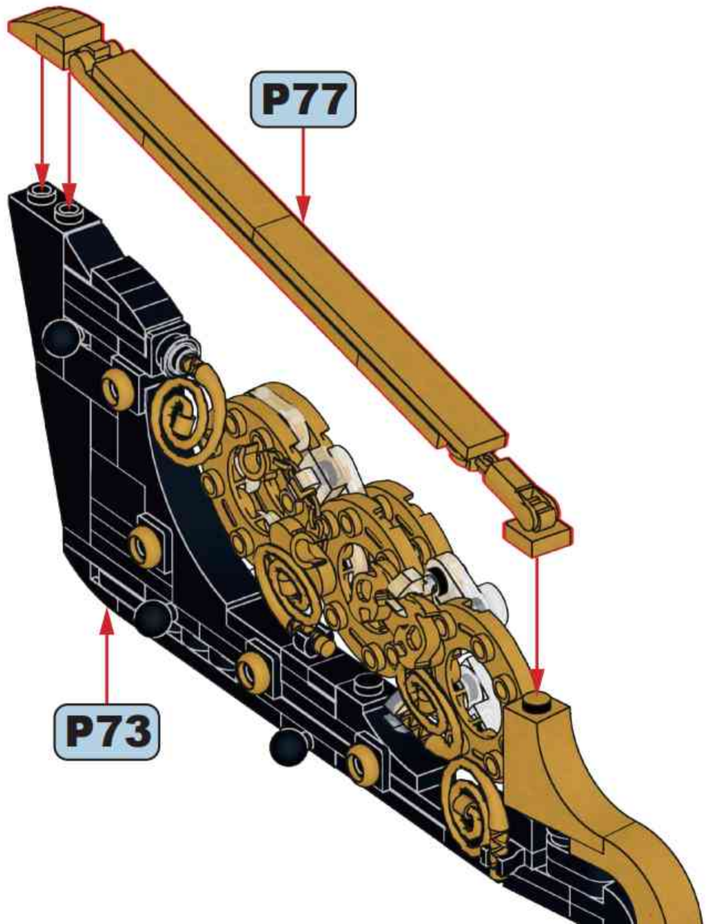

P79

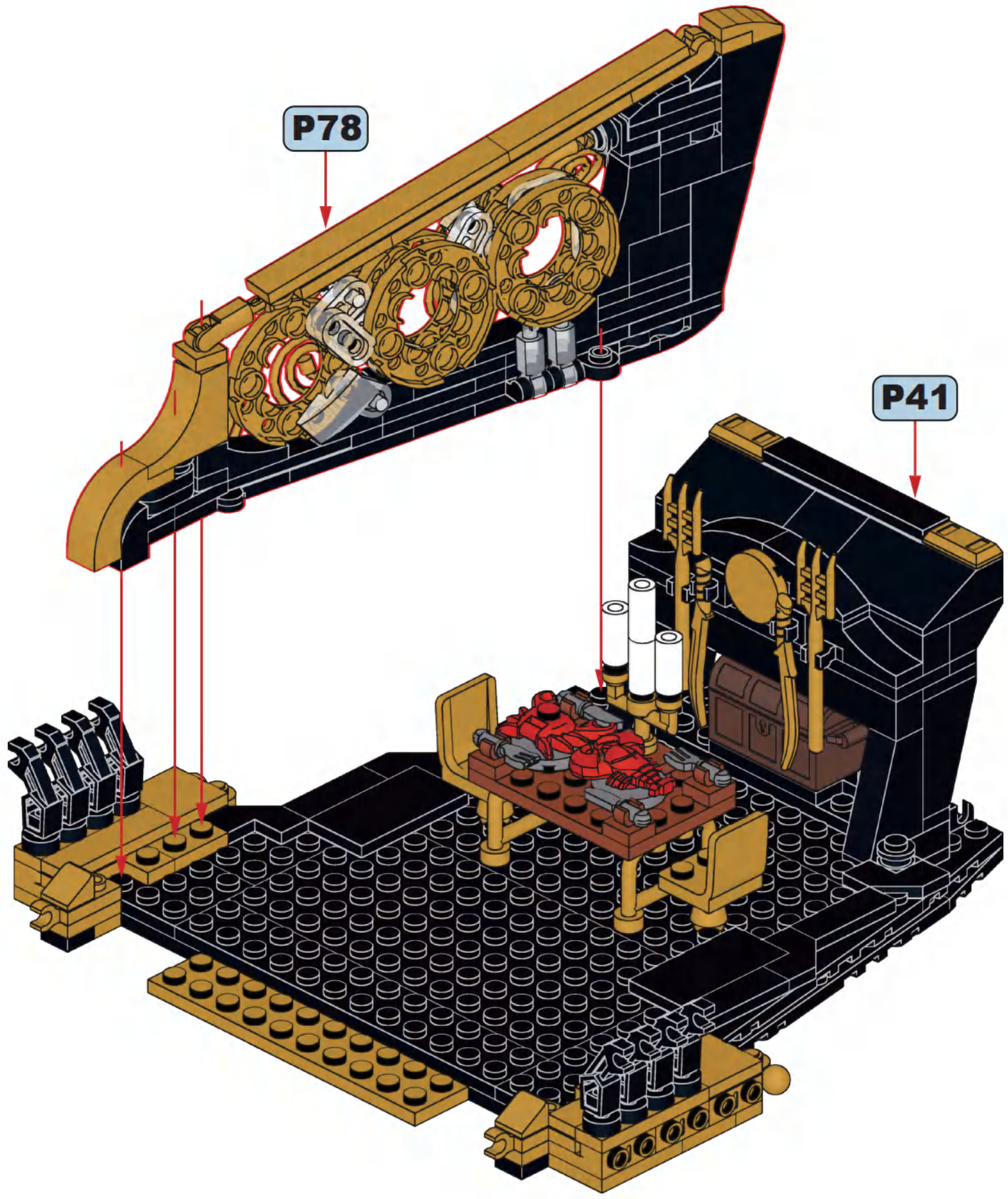

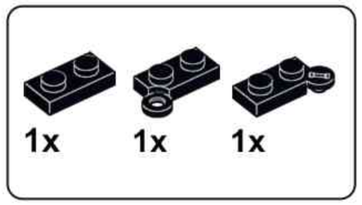

P80

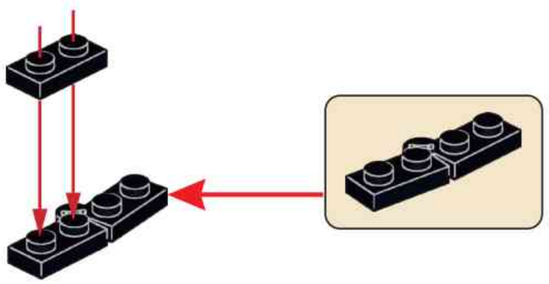

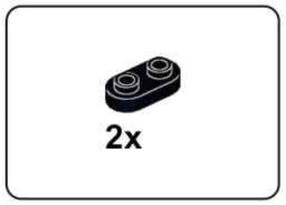

P81

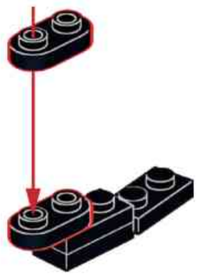

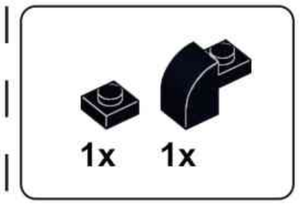

P82

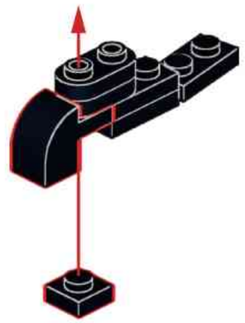

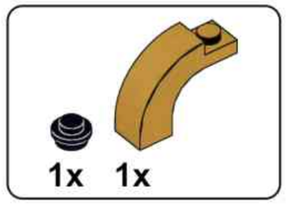

P83

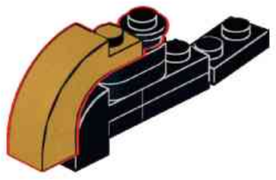

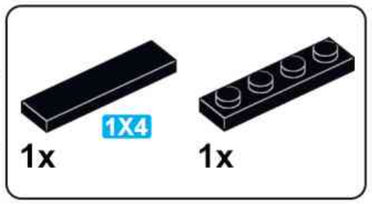

P84

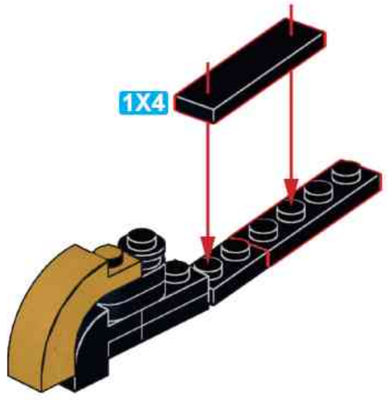

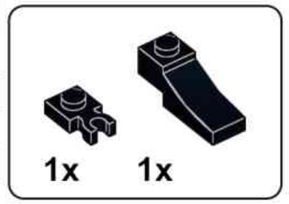

P85

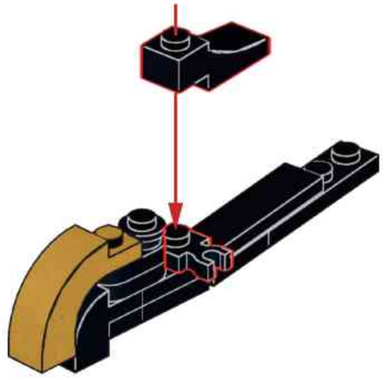

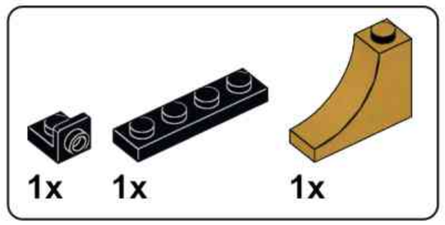

P86

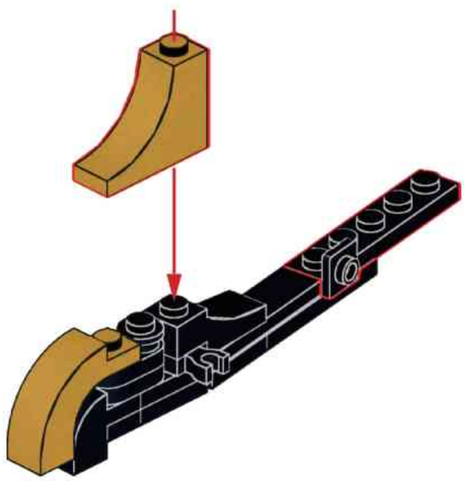

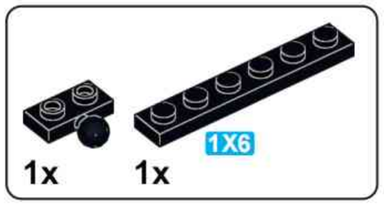

P87

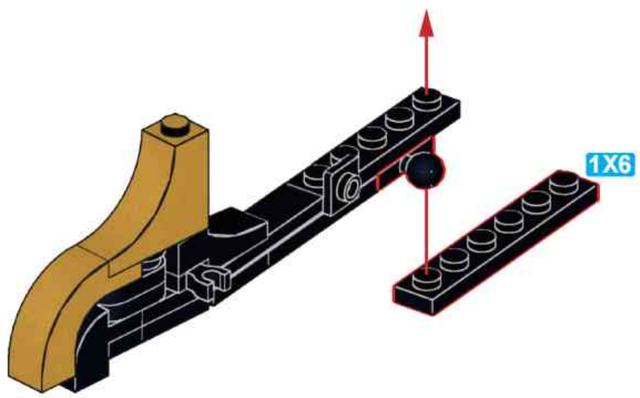

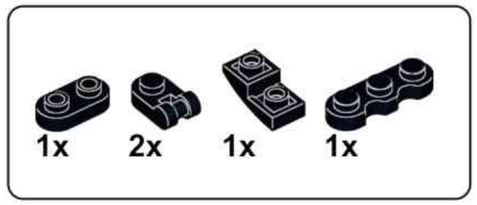

P88

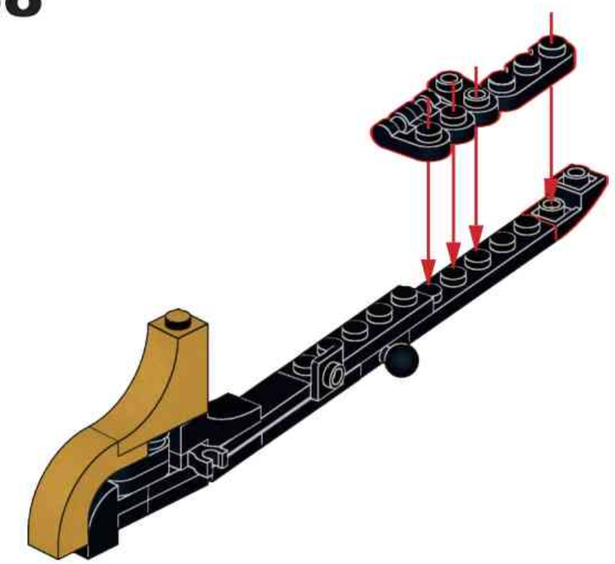

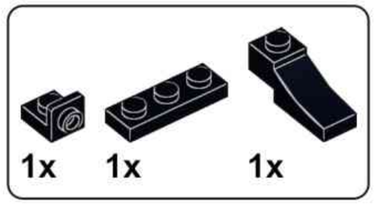

P89

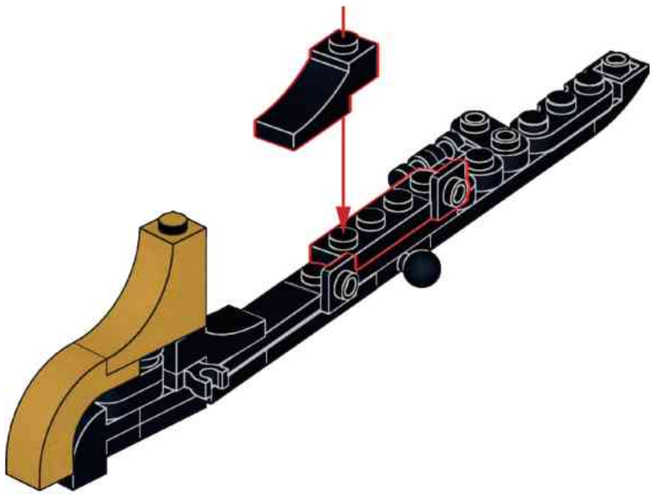

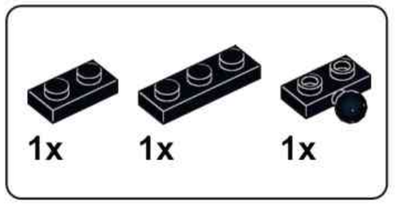

P90

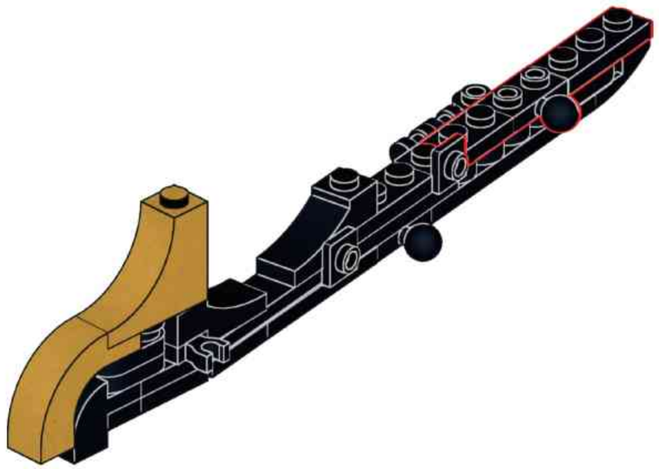

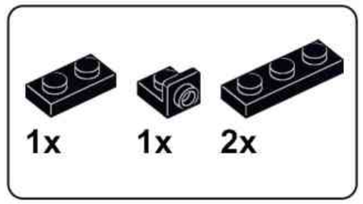

P91

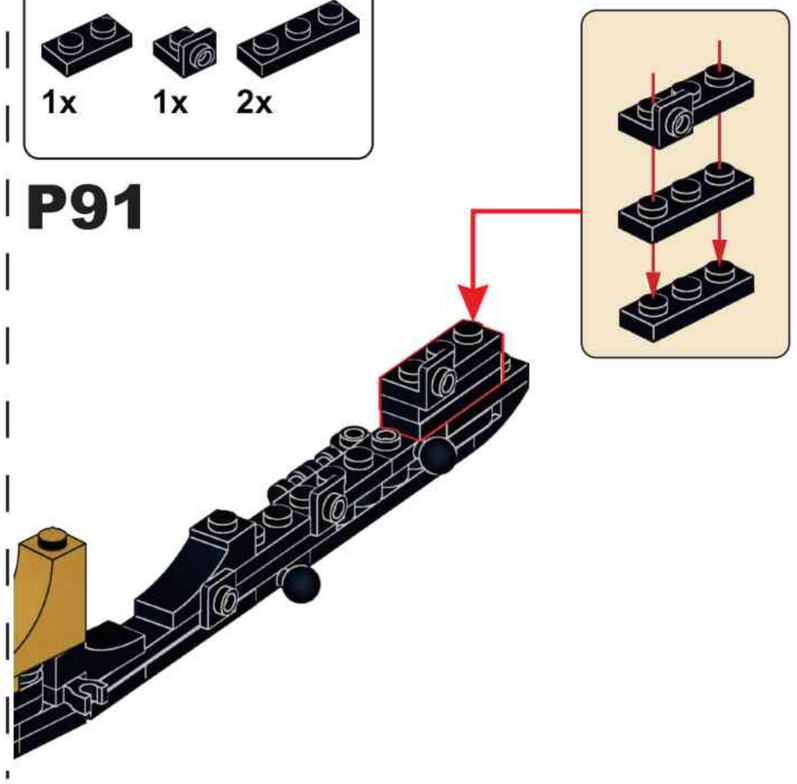

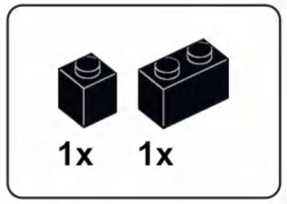

P92

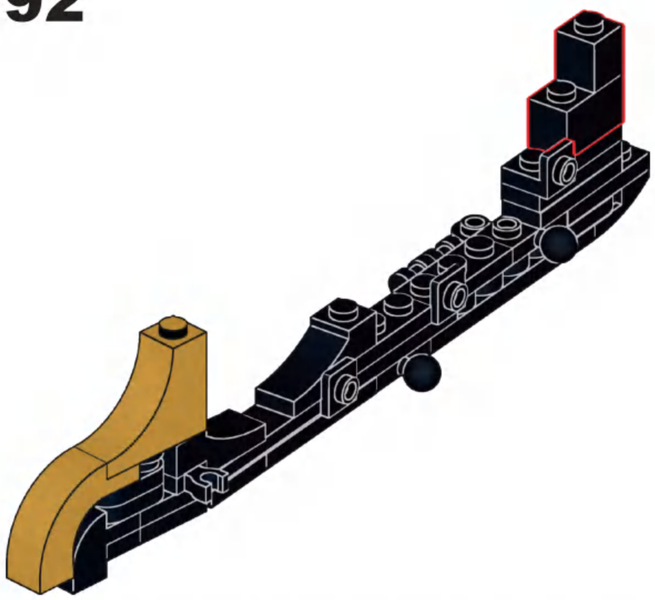

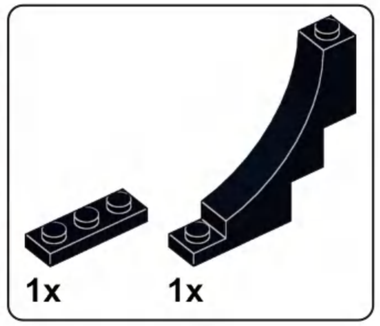

P93

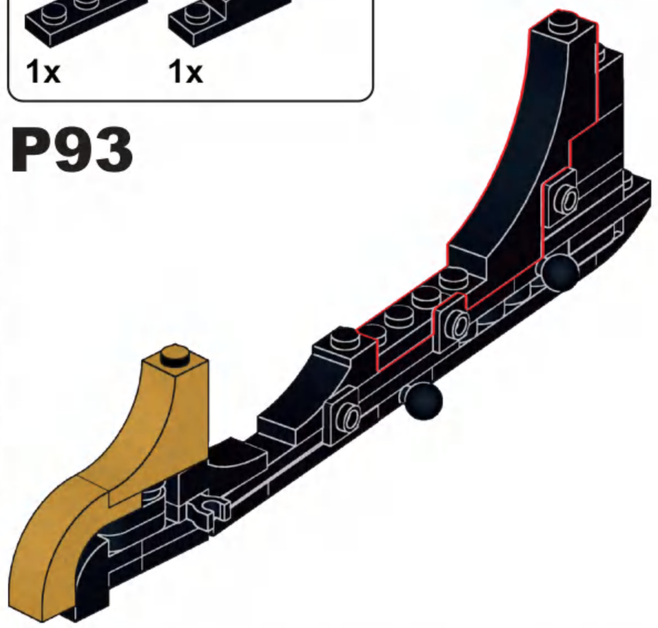

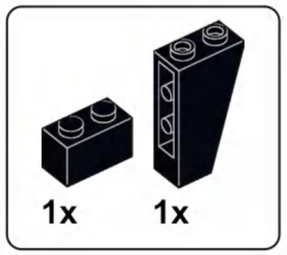

P94

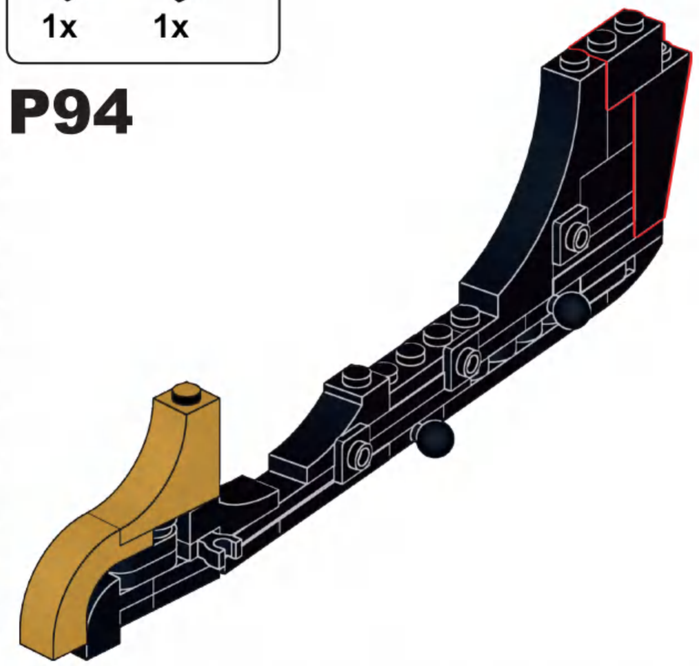

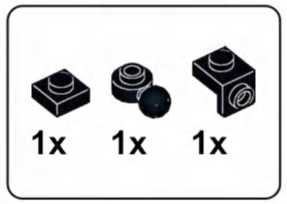

P95

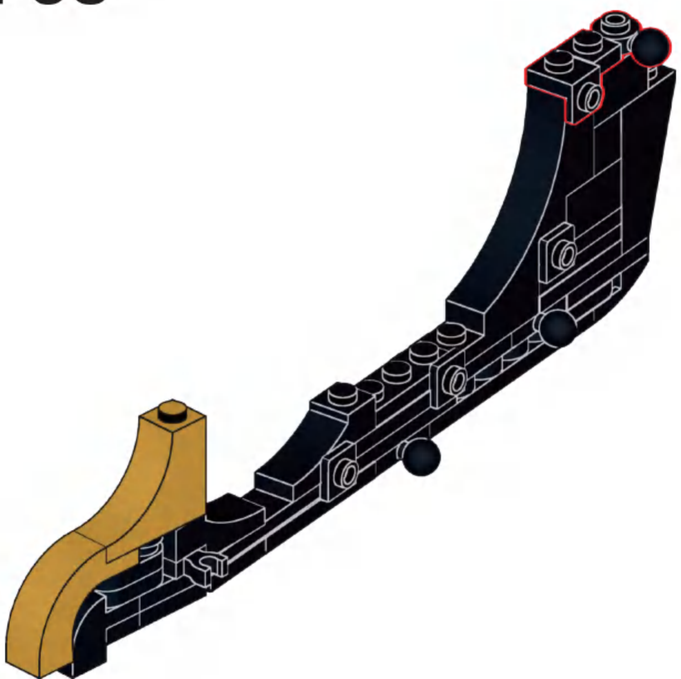

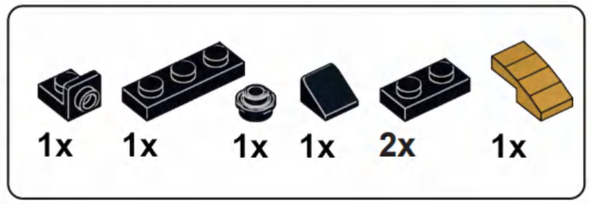

P96

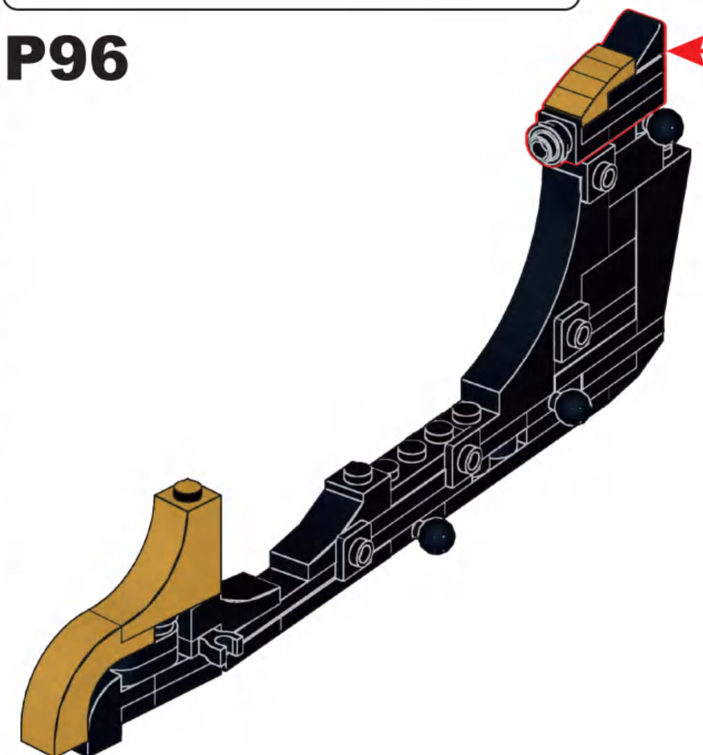

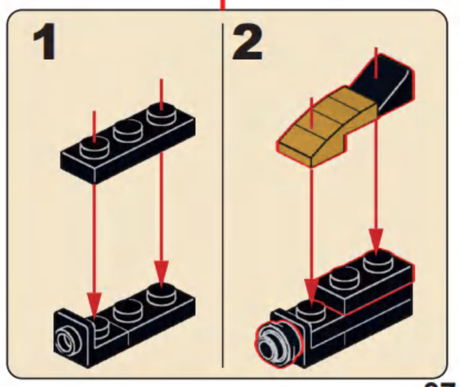

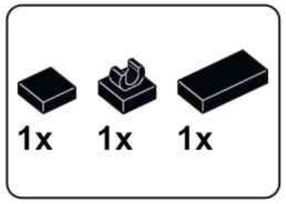

P97

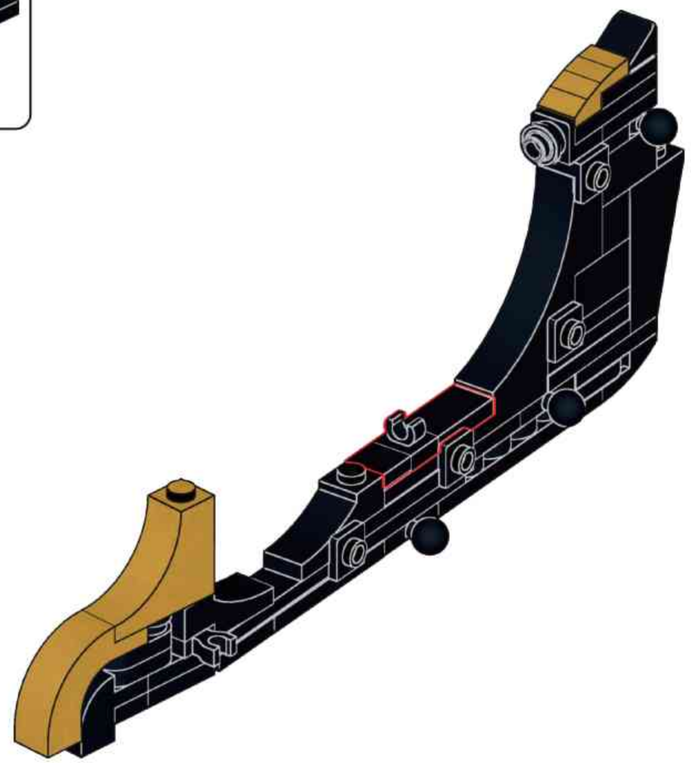

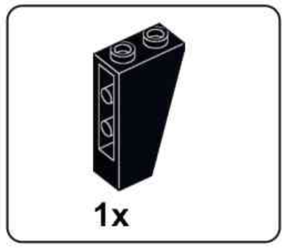

P98

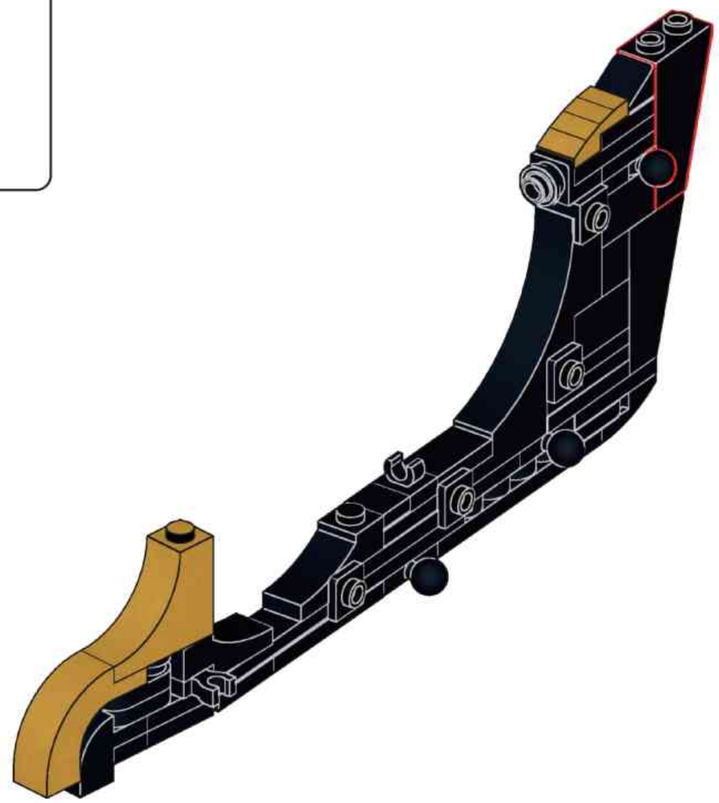

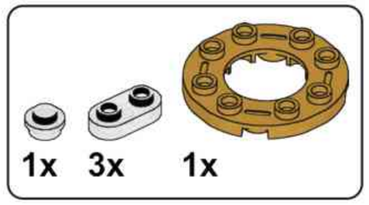

P99

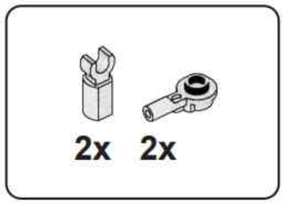

P100

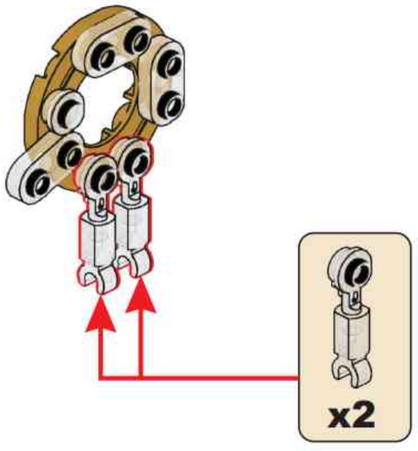

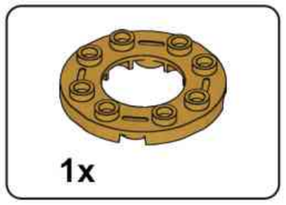

P101

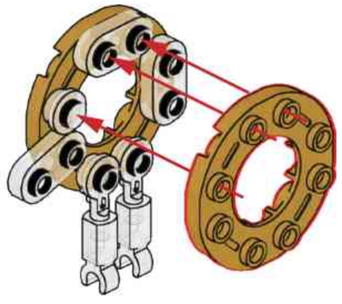

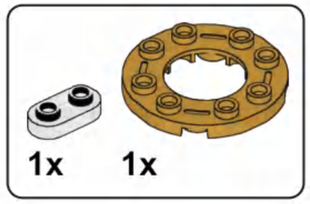

P102

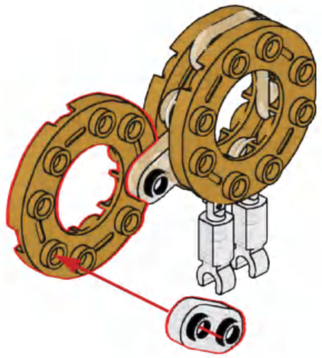

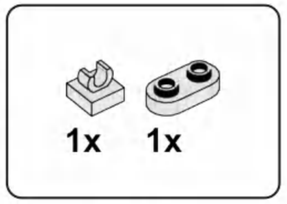

P103

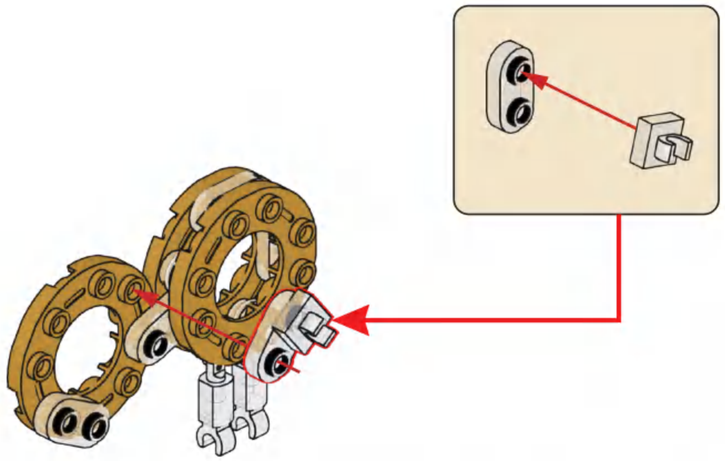

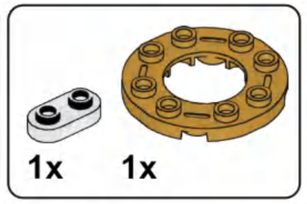

P104

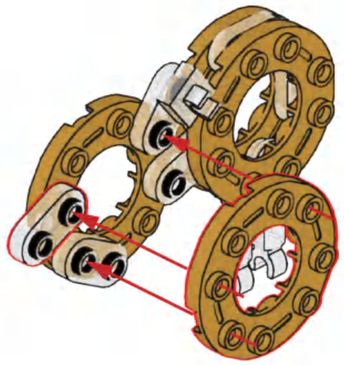

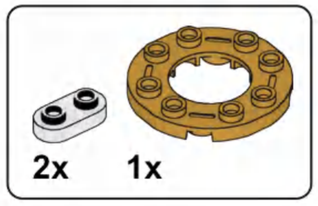

P105

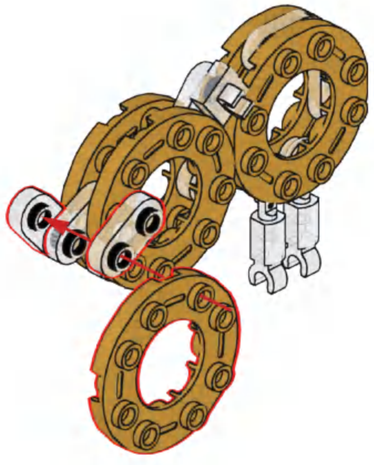

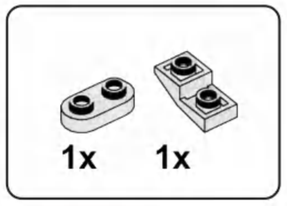

P106

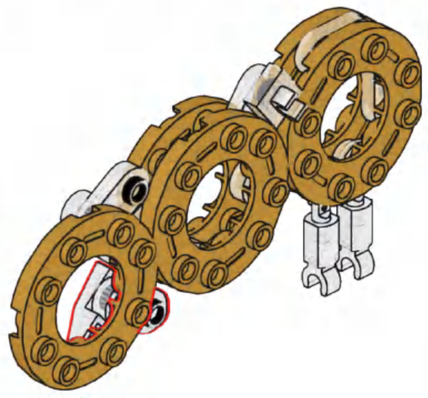

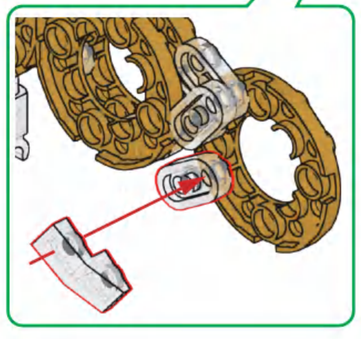

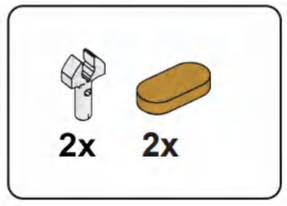
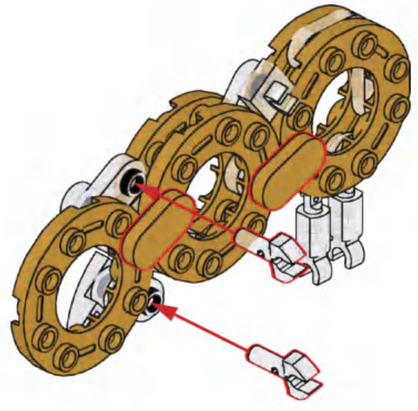
P107