Reobrix

NO.66025

Leaning Tower of Pisa

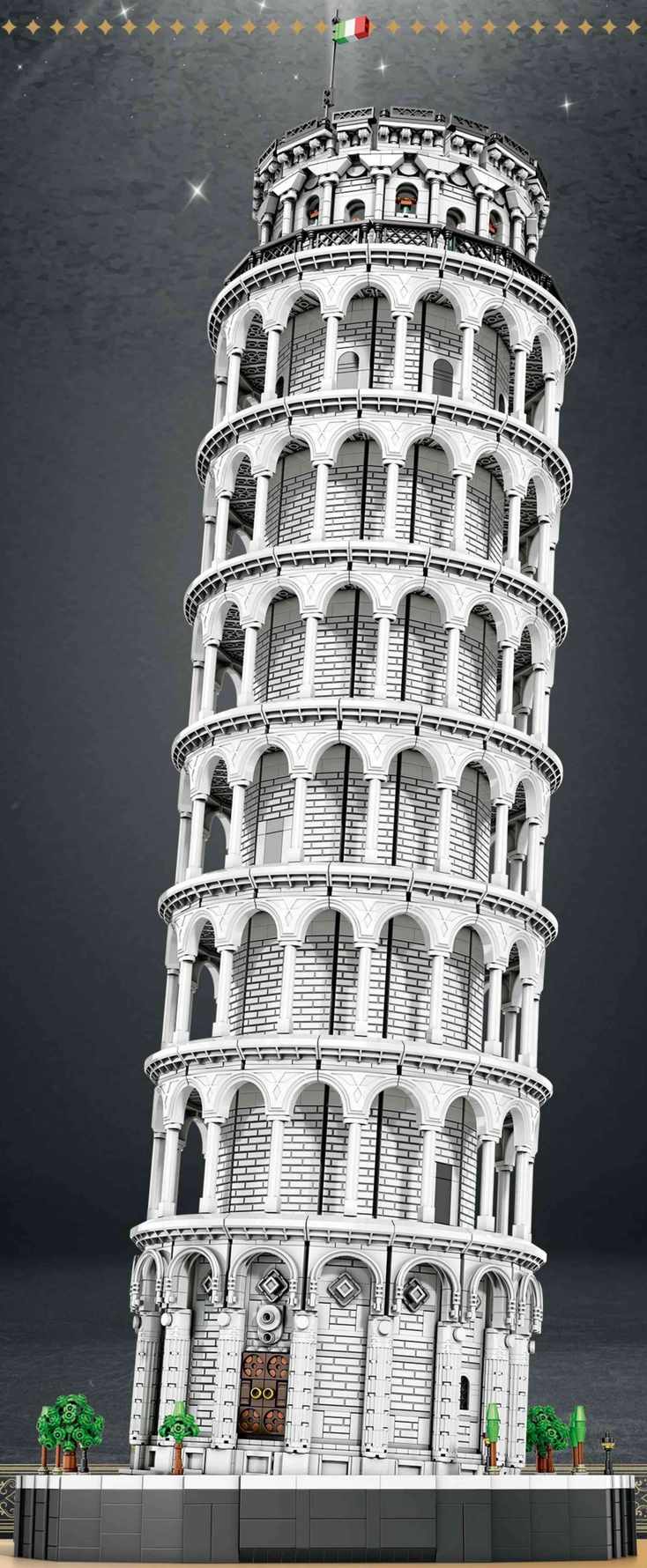

RESTORATION RATIO COLUMN PHYSICAL UP TO

44 inches

Located in Italy

One Of The Seven Wonders of the World

Built In August 1173, One of the World Heritage Sites

Evidenza

CLASSIC RESTORATION

SIMULATE 100% ORIGINALITY

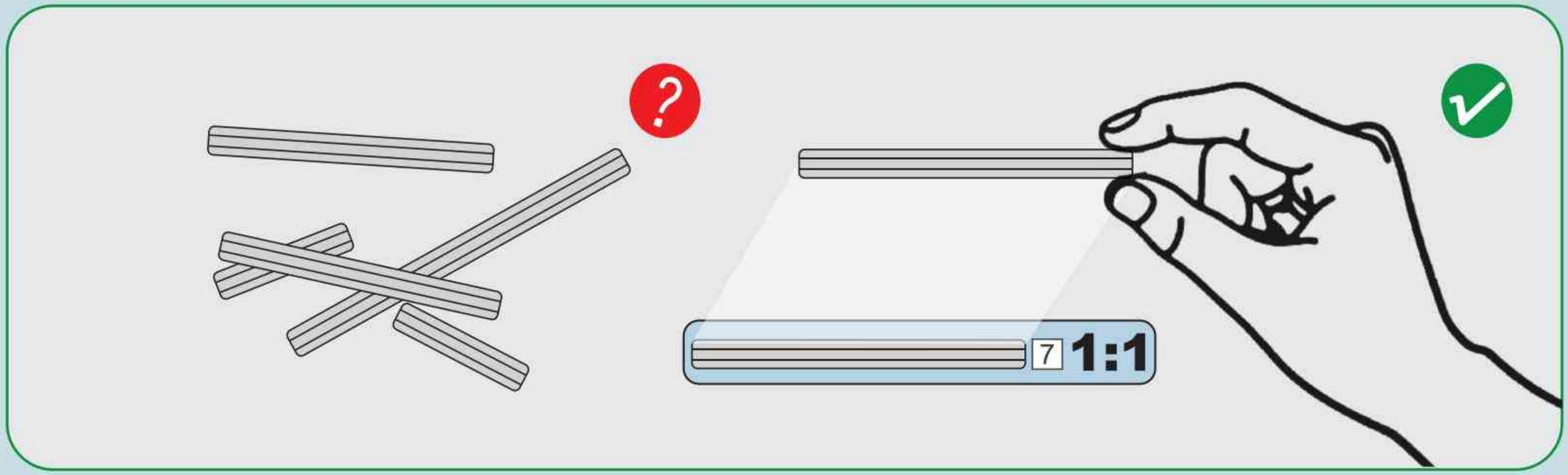
7
1:1

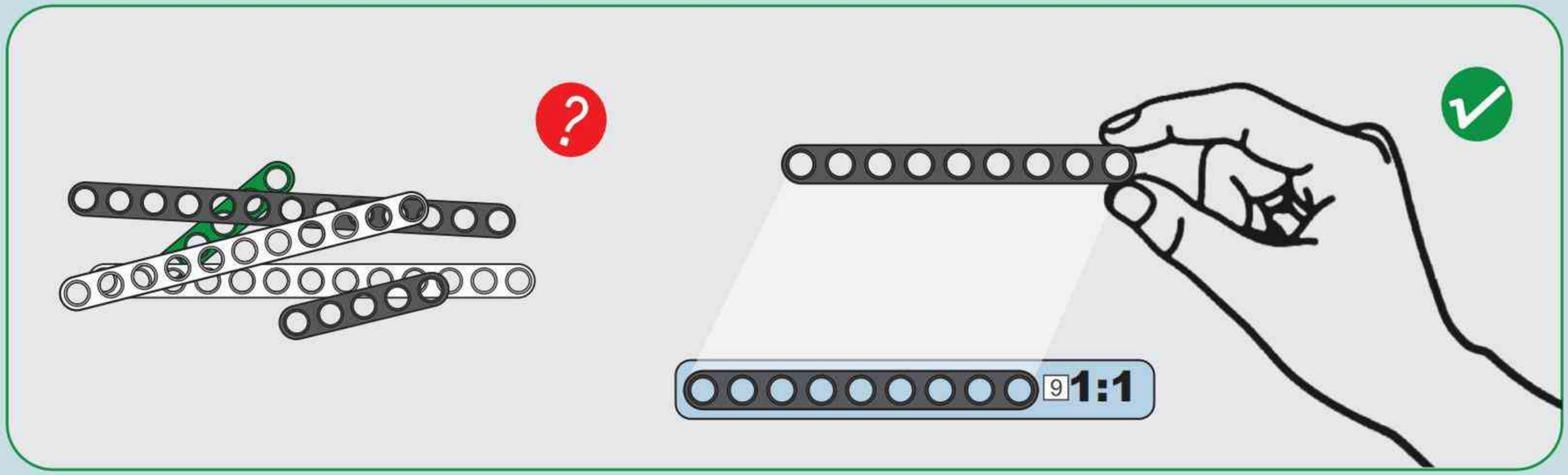
9
1:1

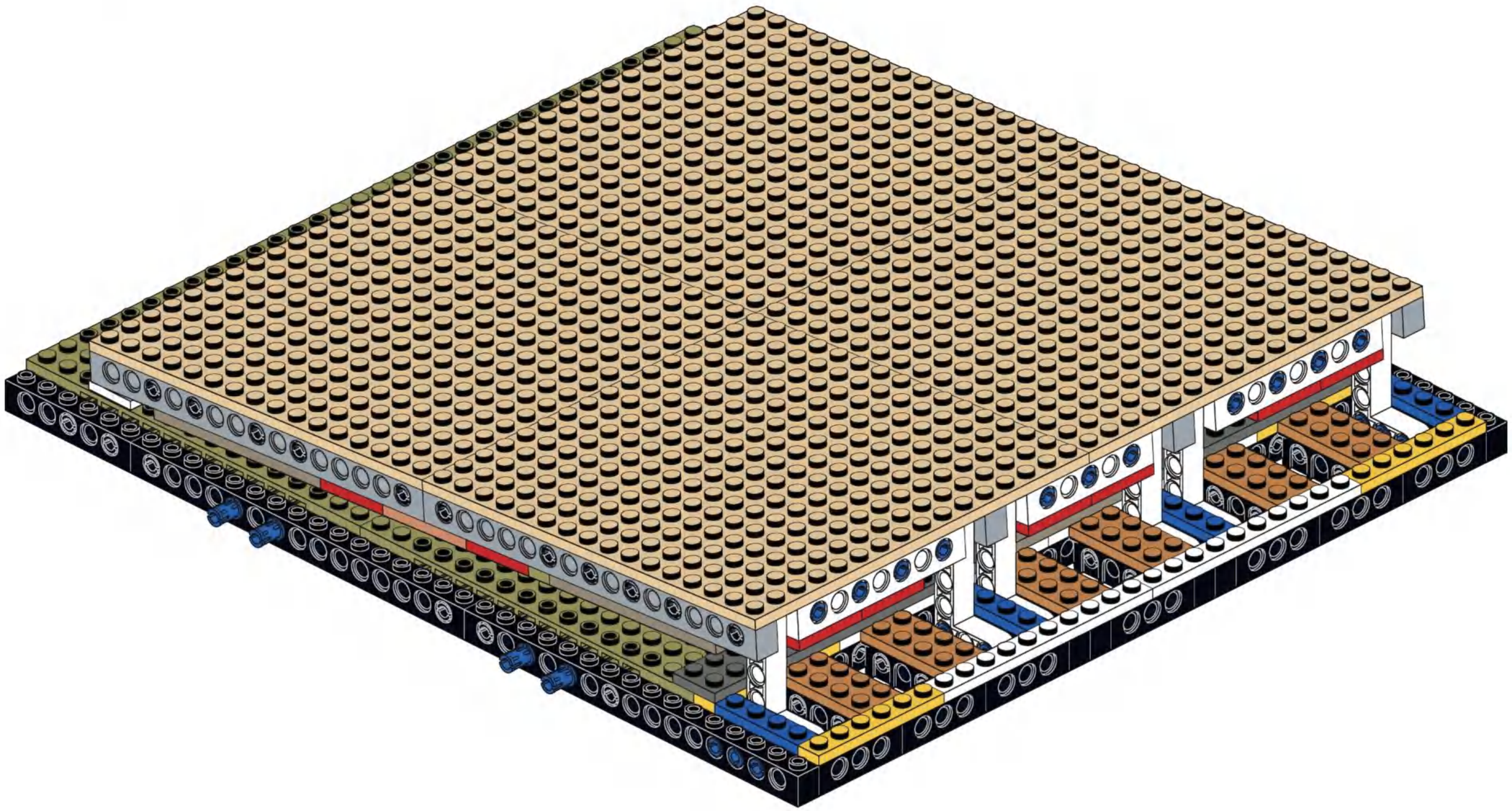

A

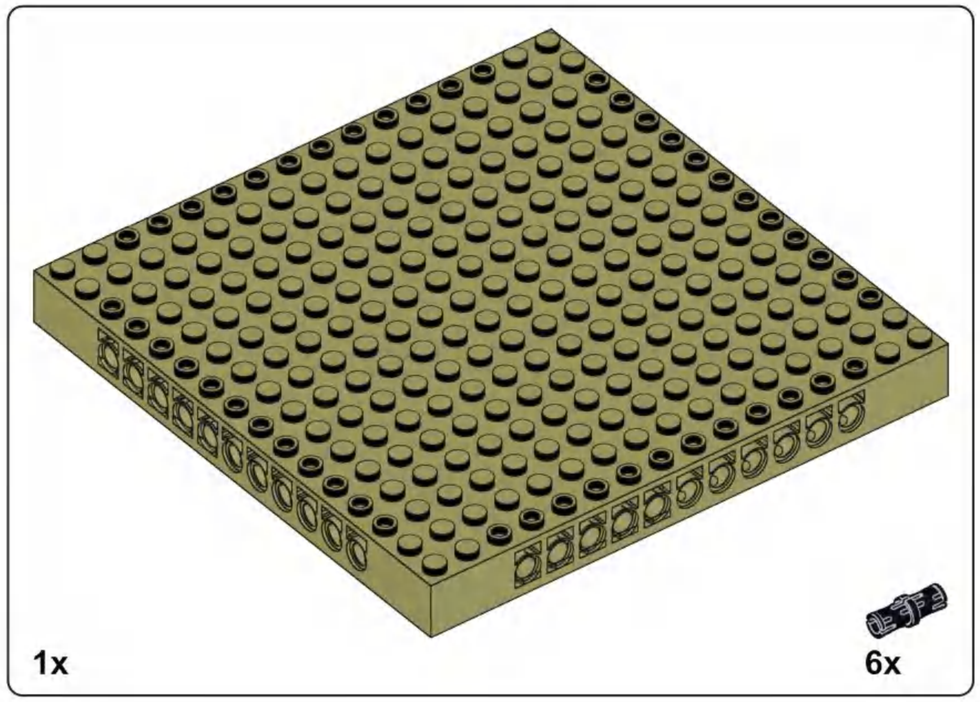

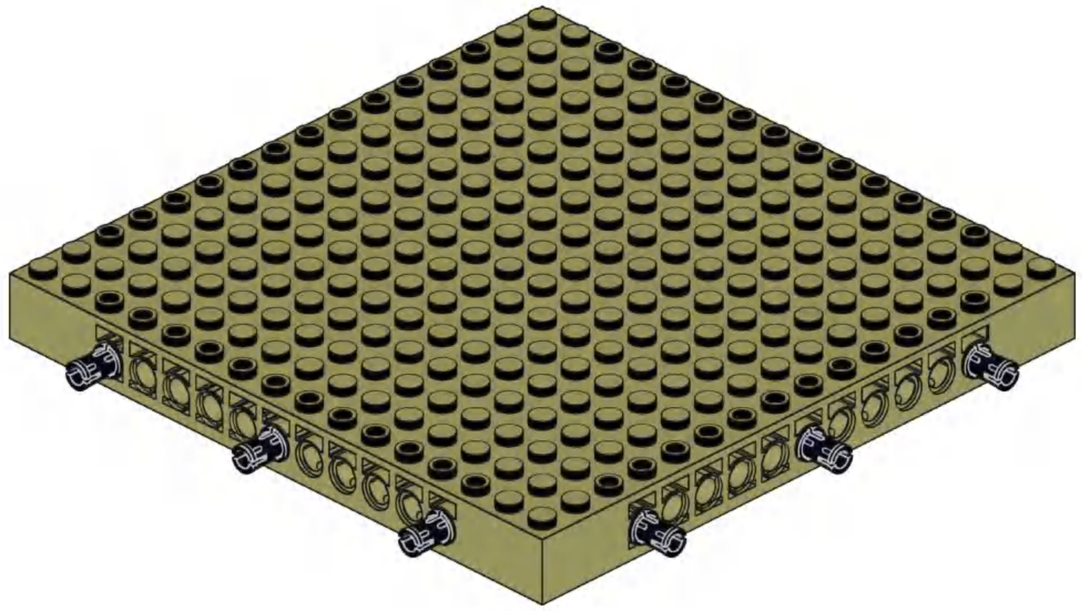

A1

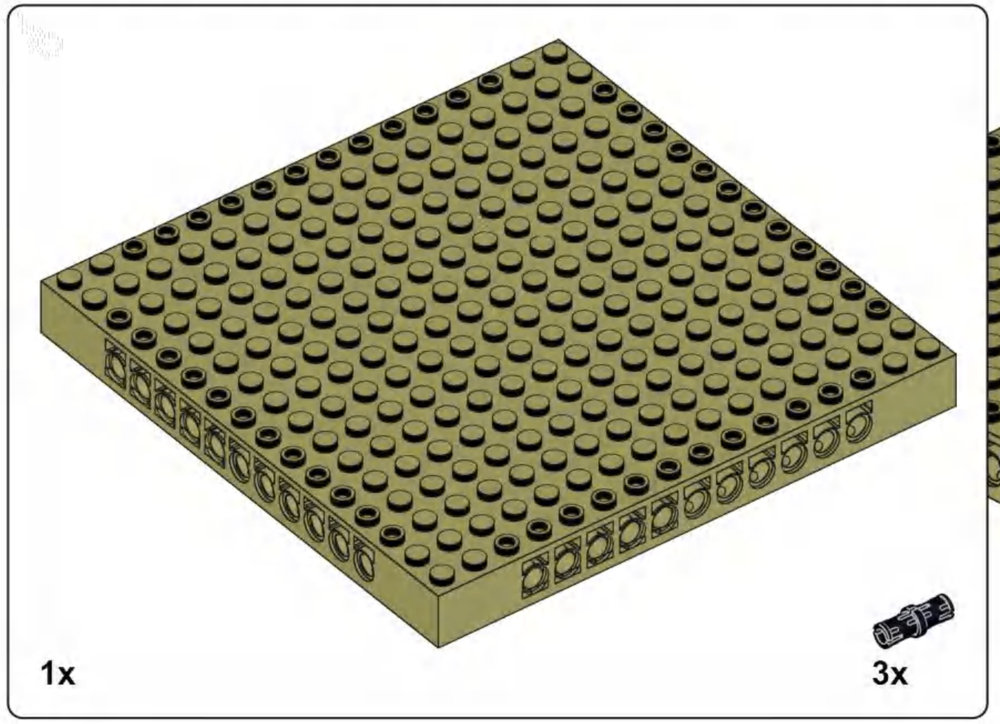

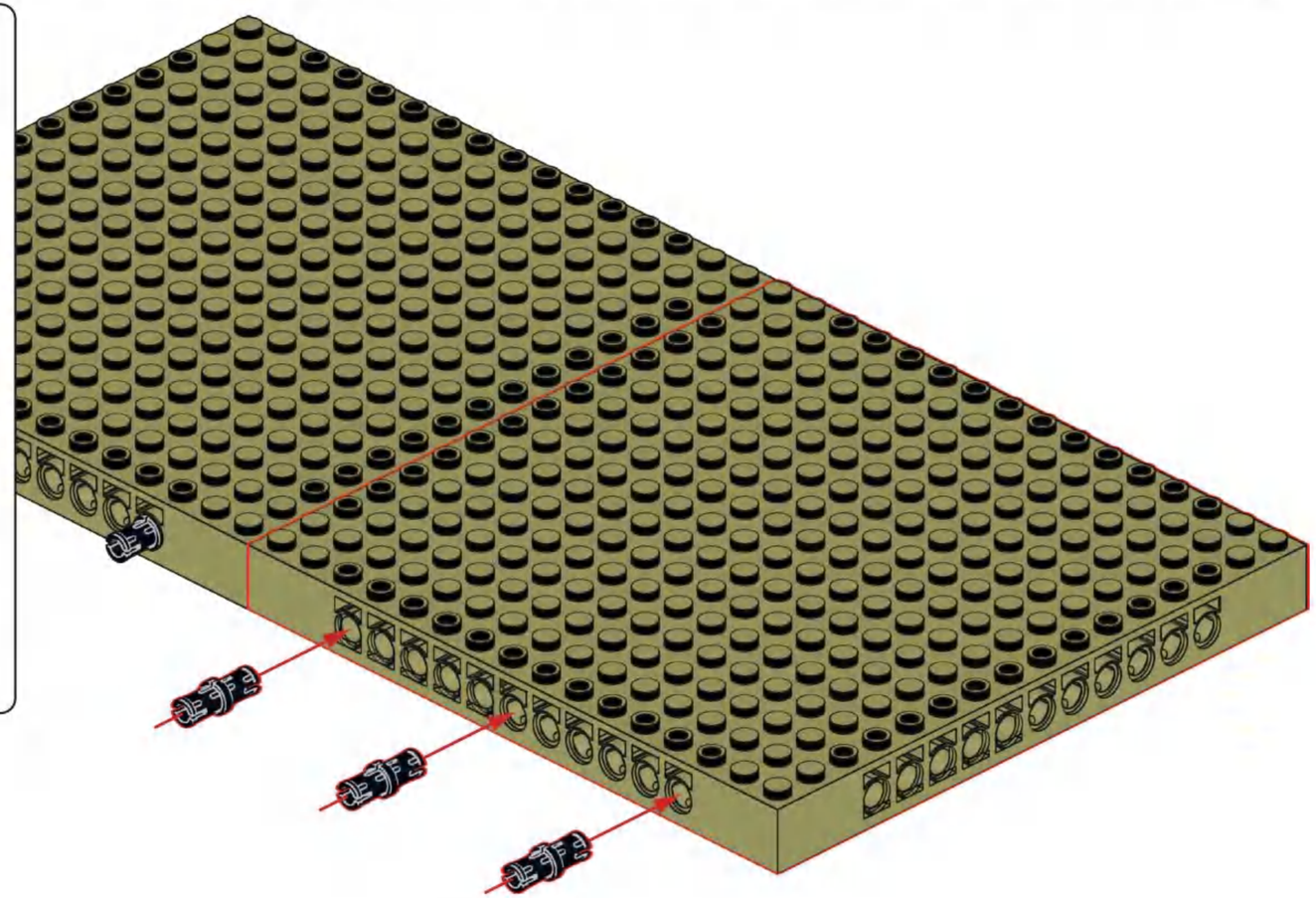

A2

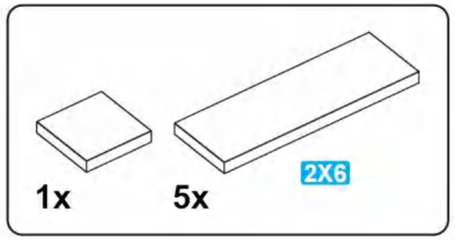

A3

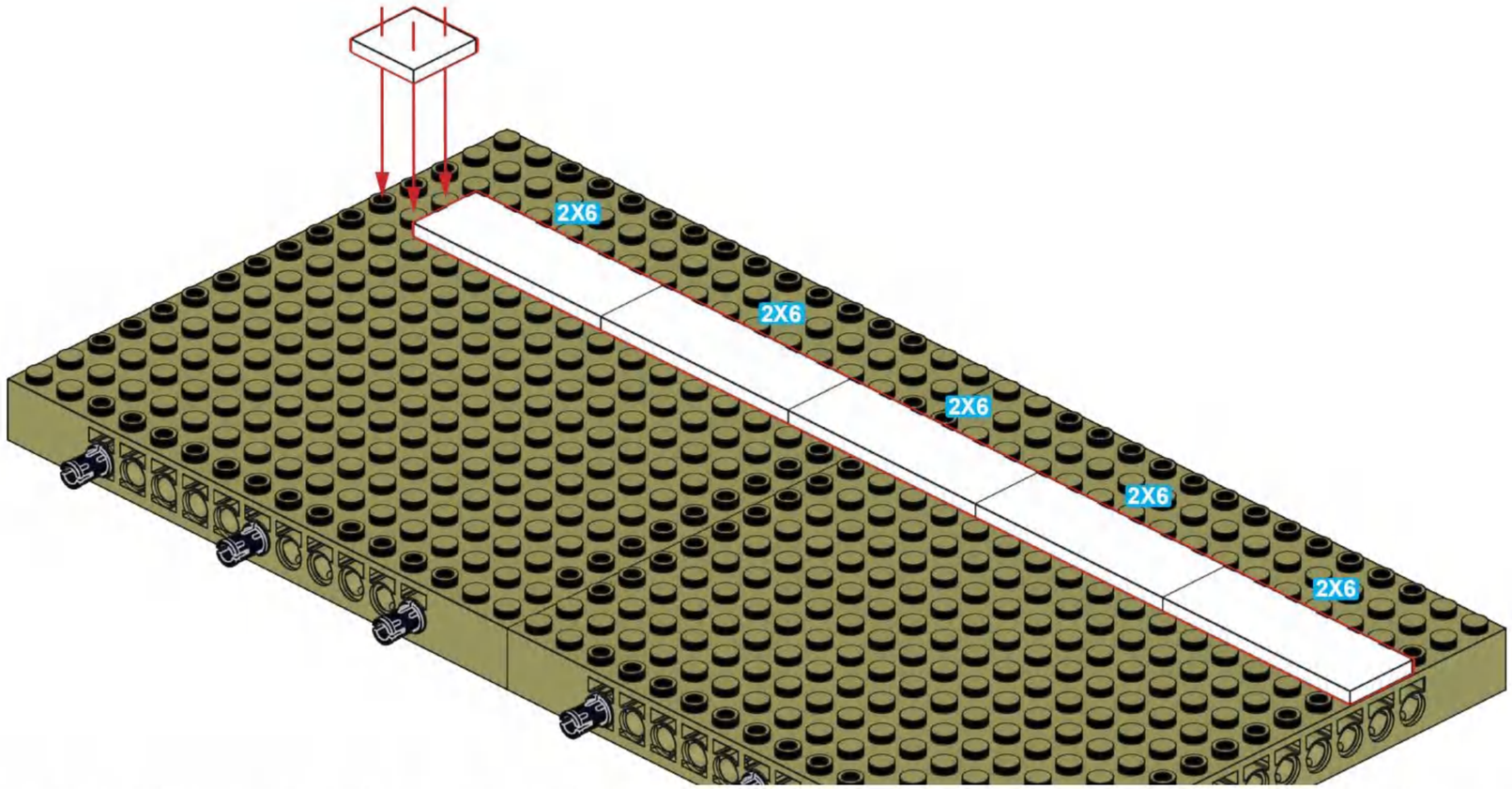

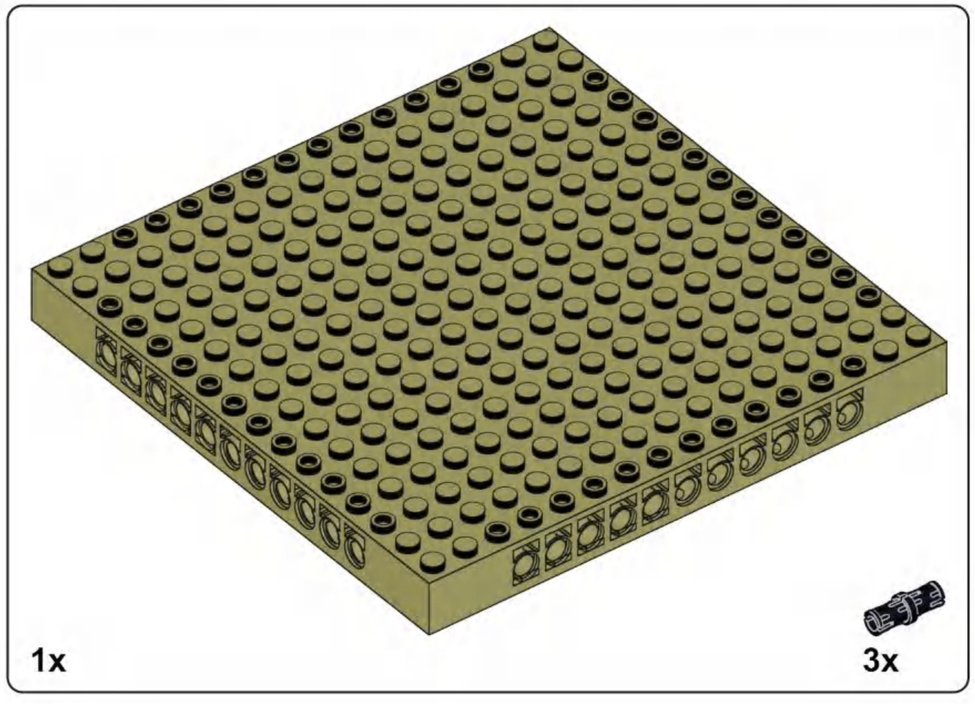

A4

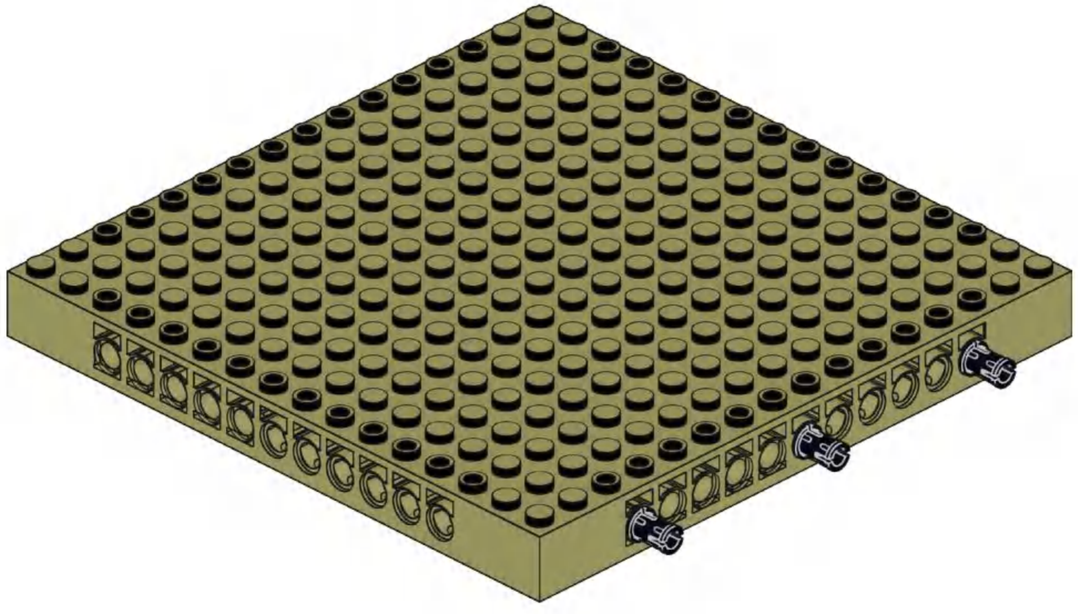

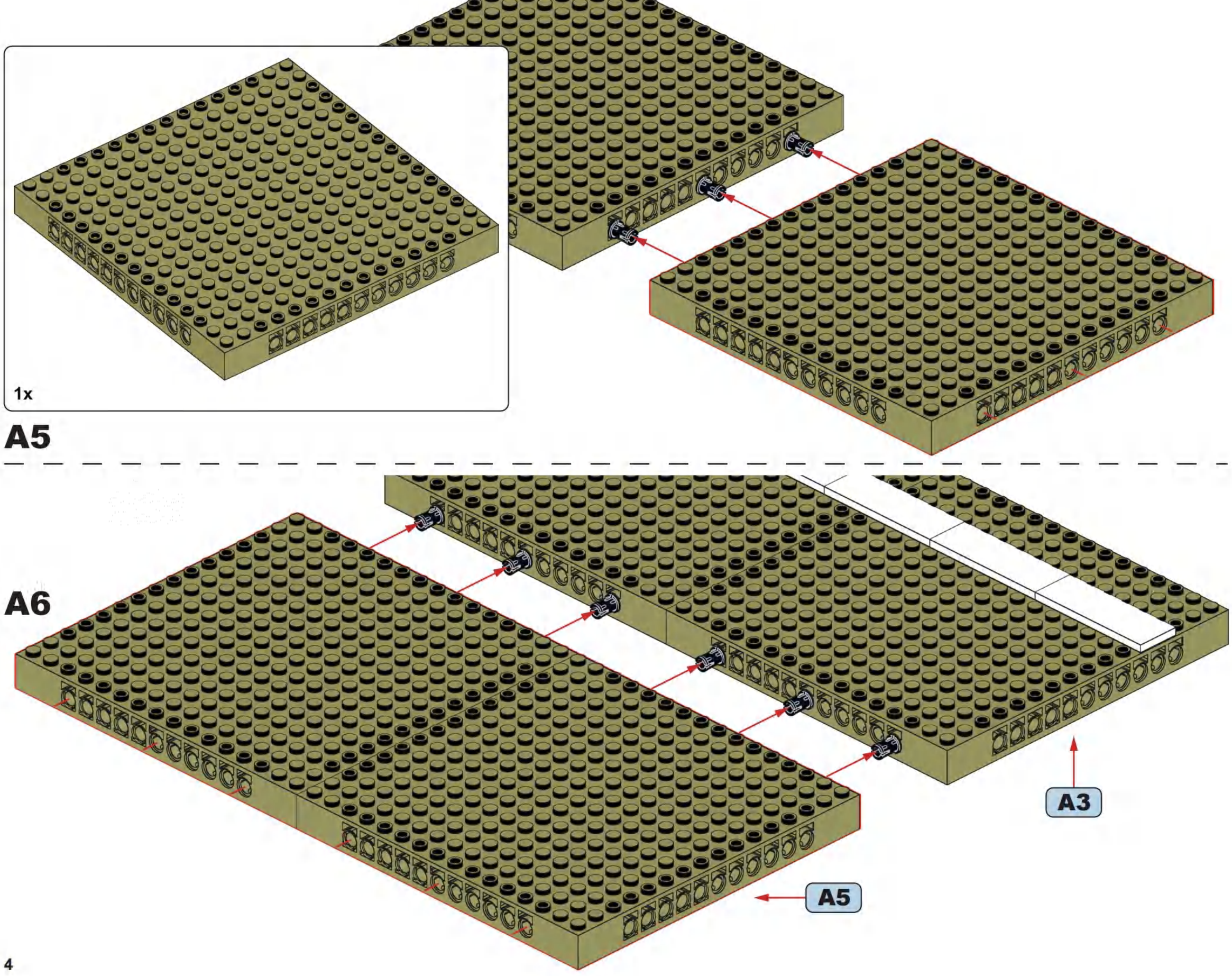
1x
A5
A6
A3
A5

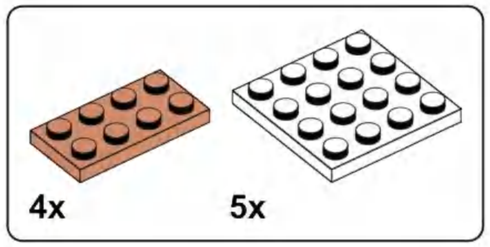

A7

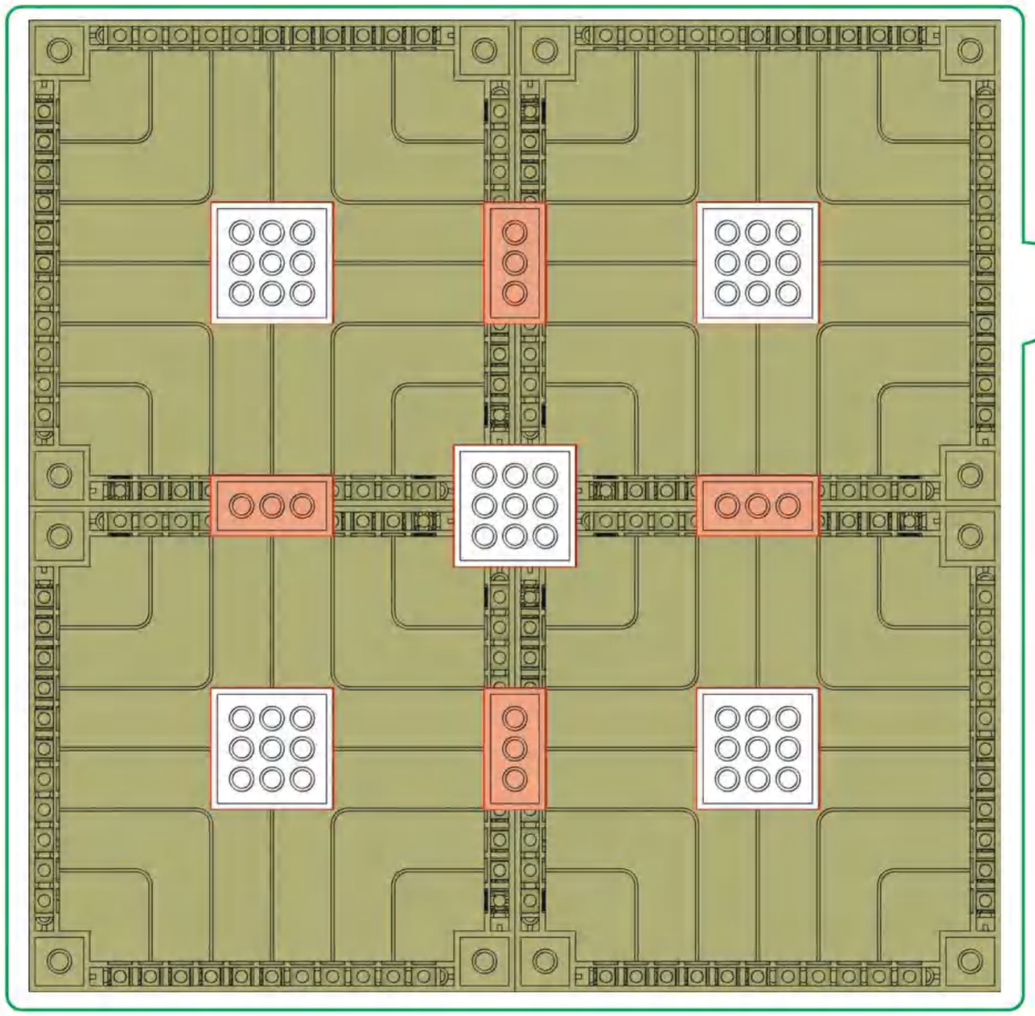

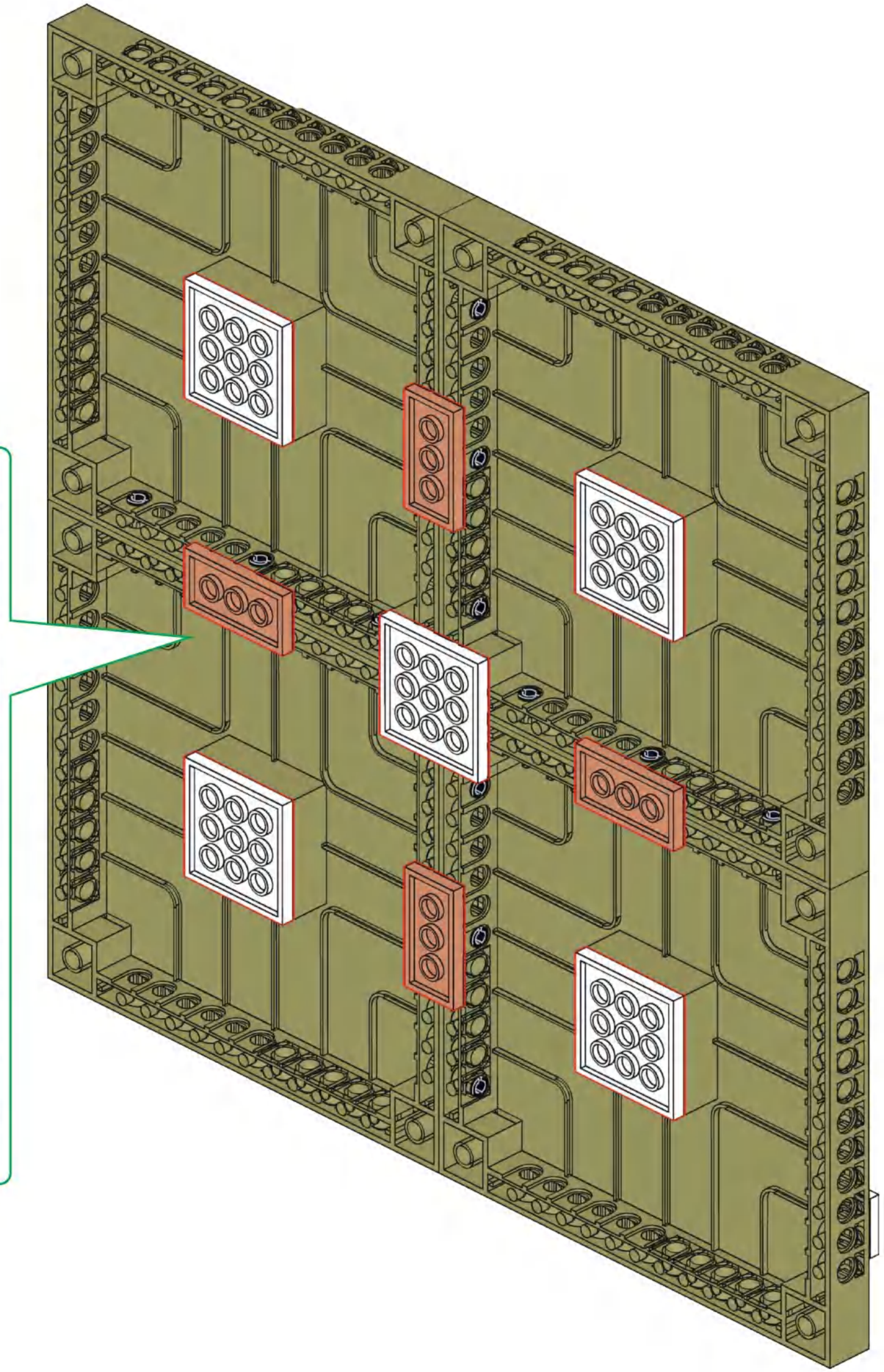

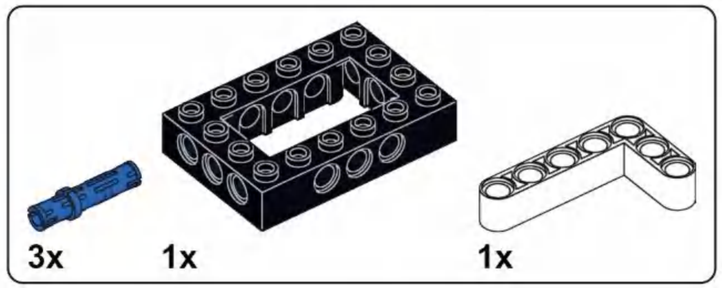

A8

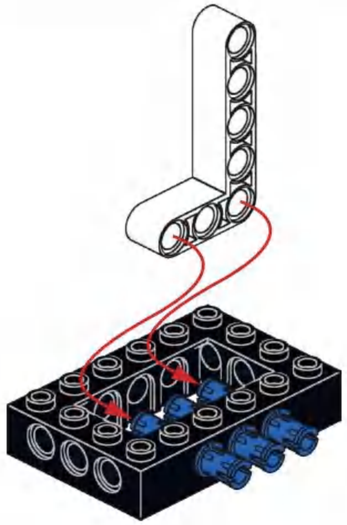

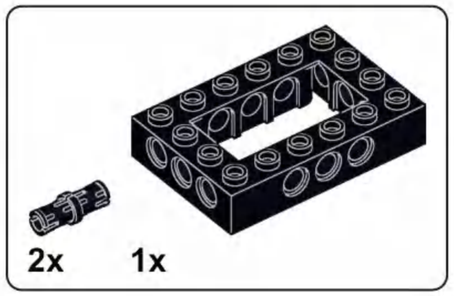

A9

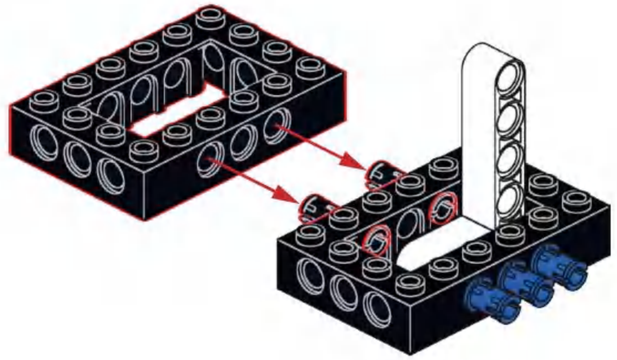

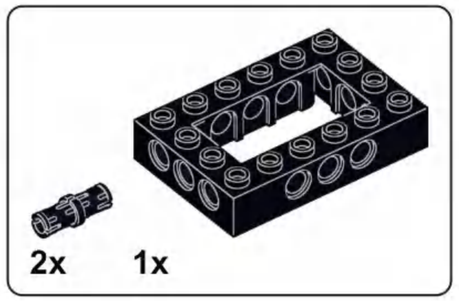

A10

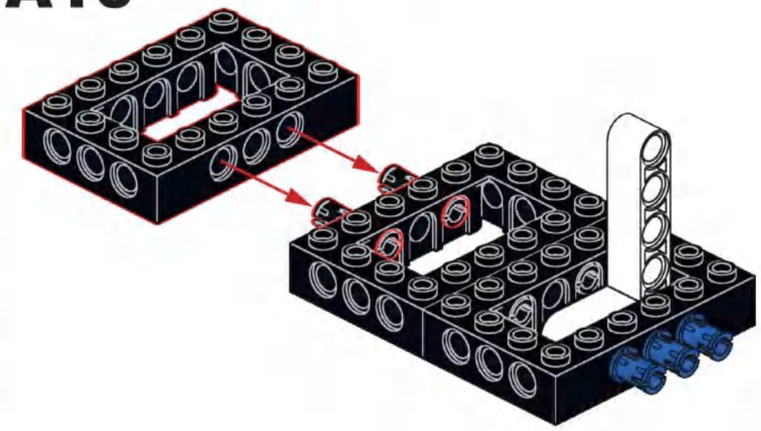

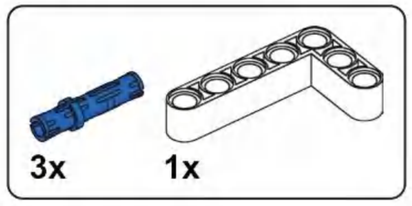

A11

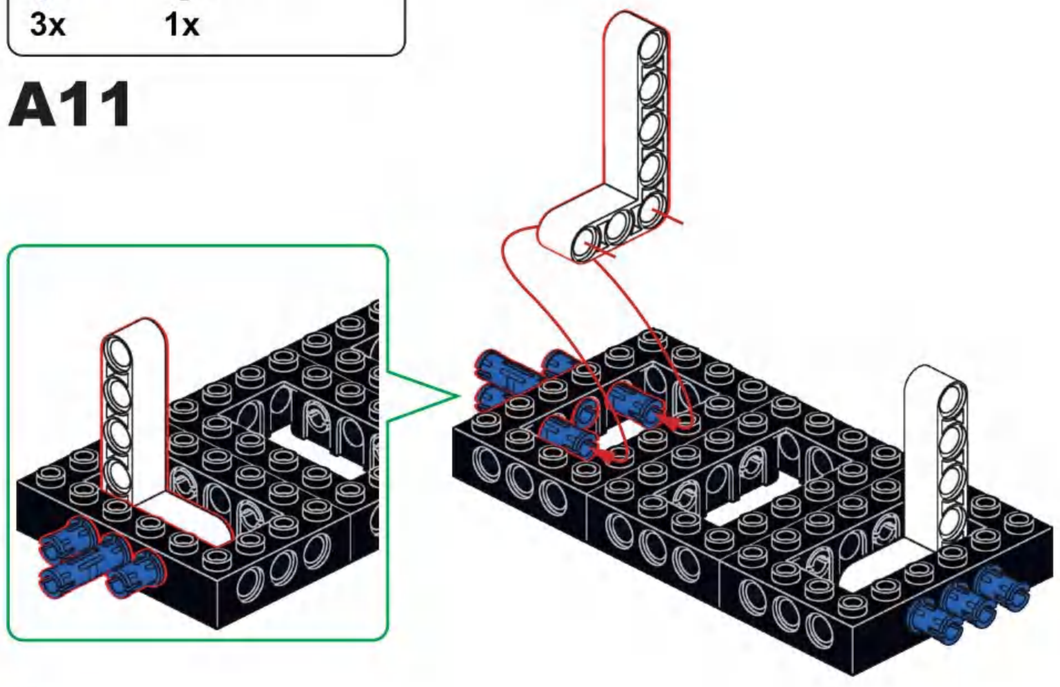

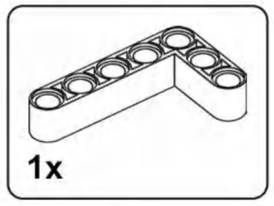

A12

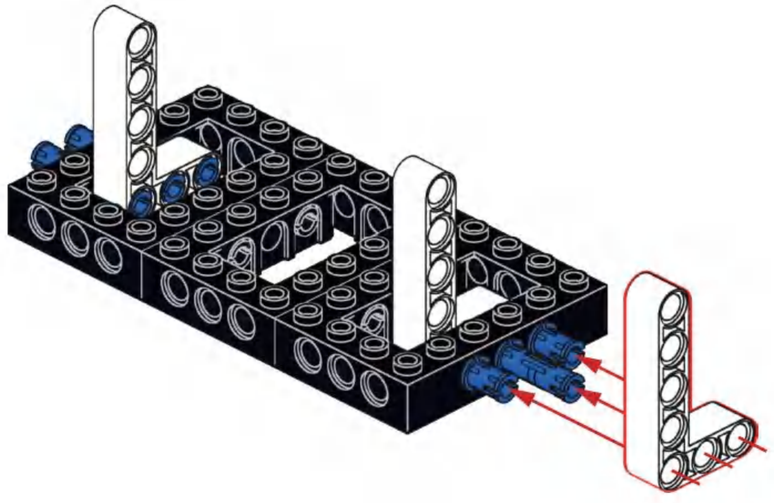

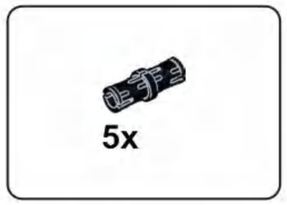

A13

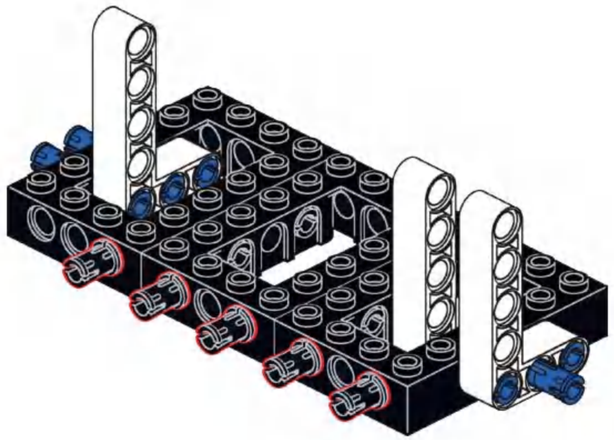

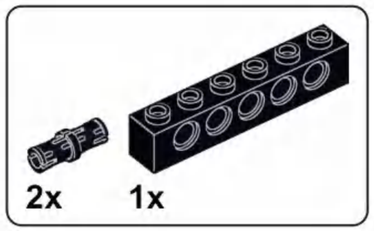

A14

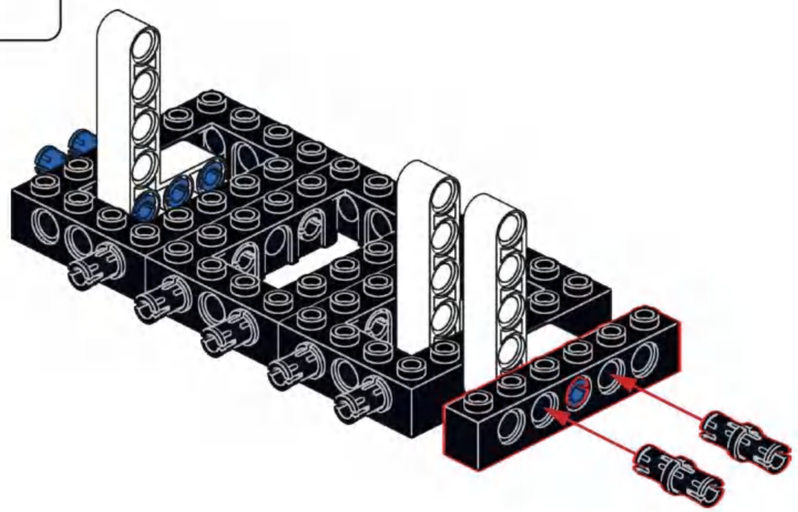

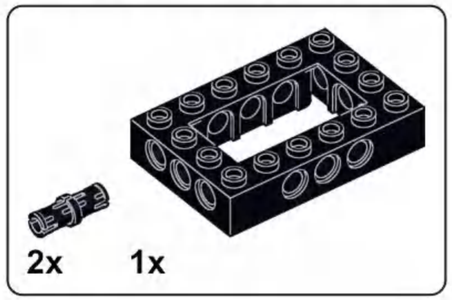

A15

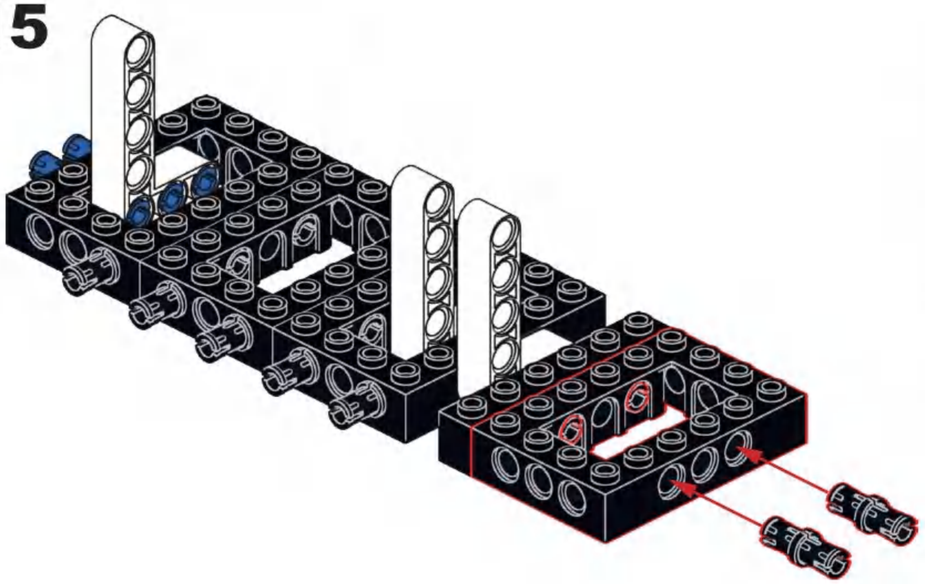

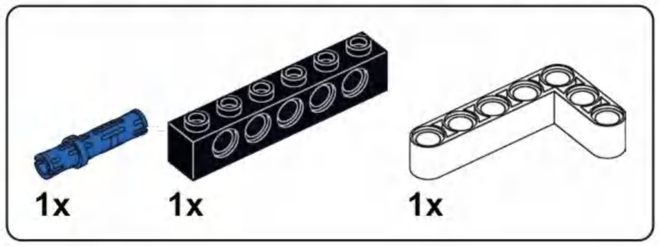

A16

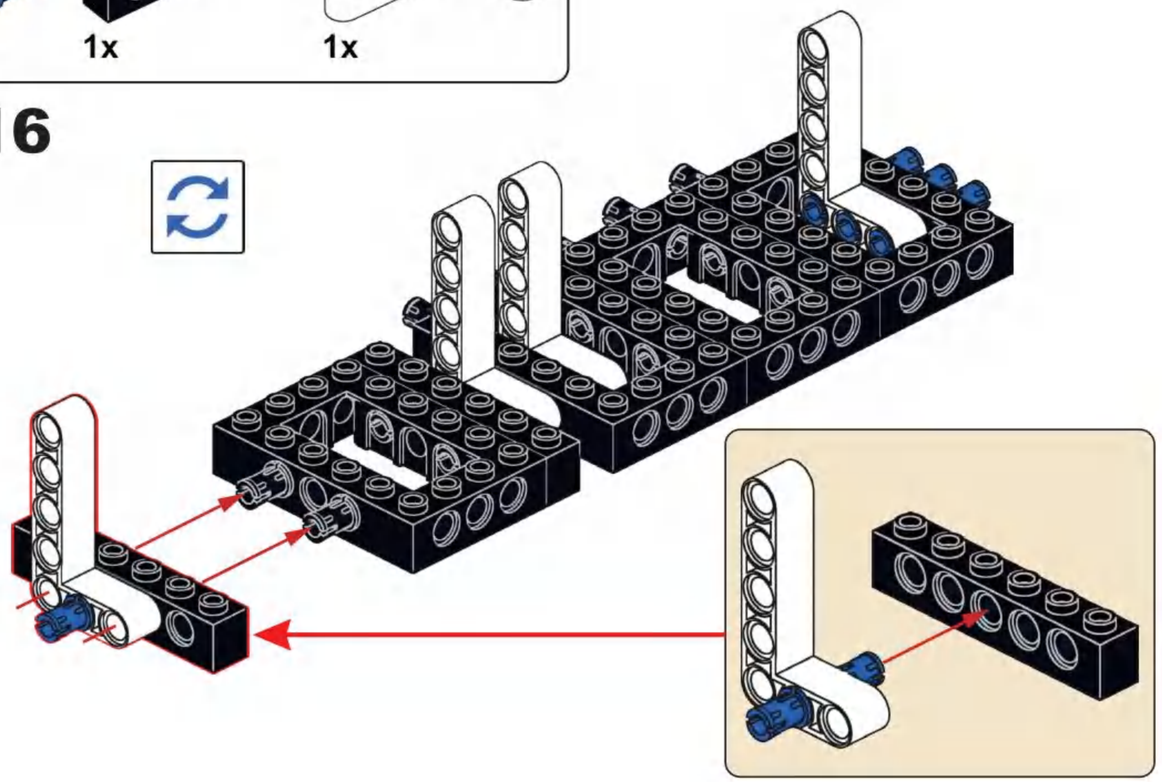

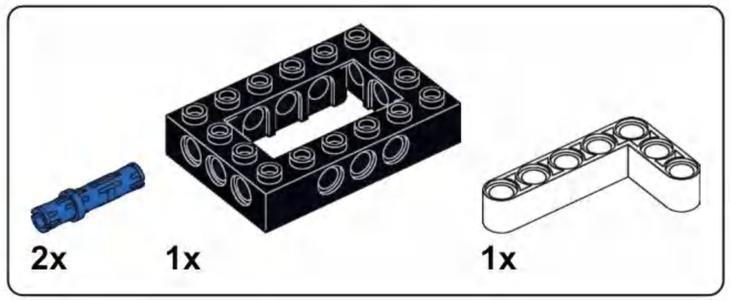

A17

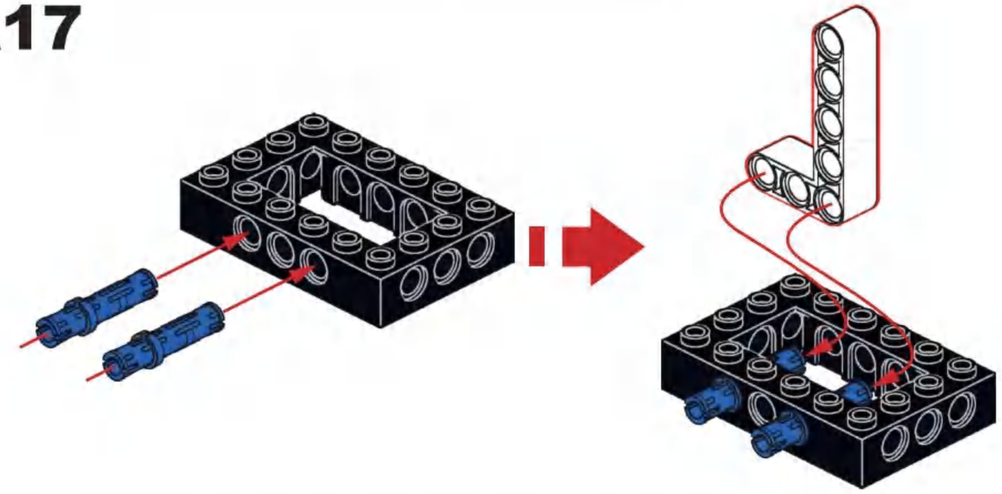

A18

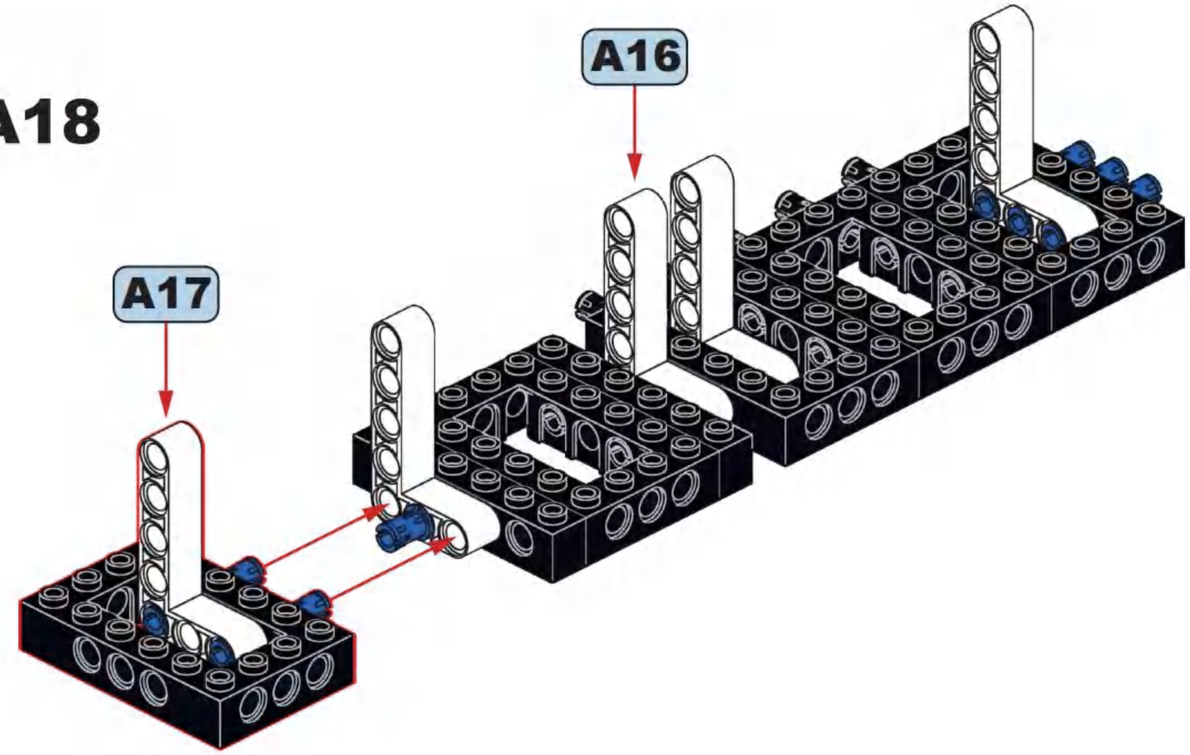

A19

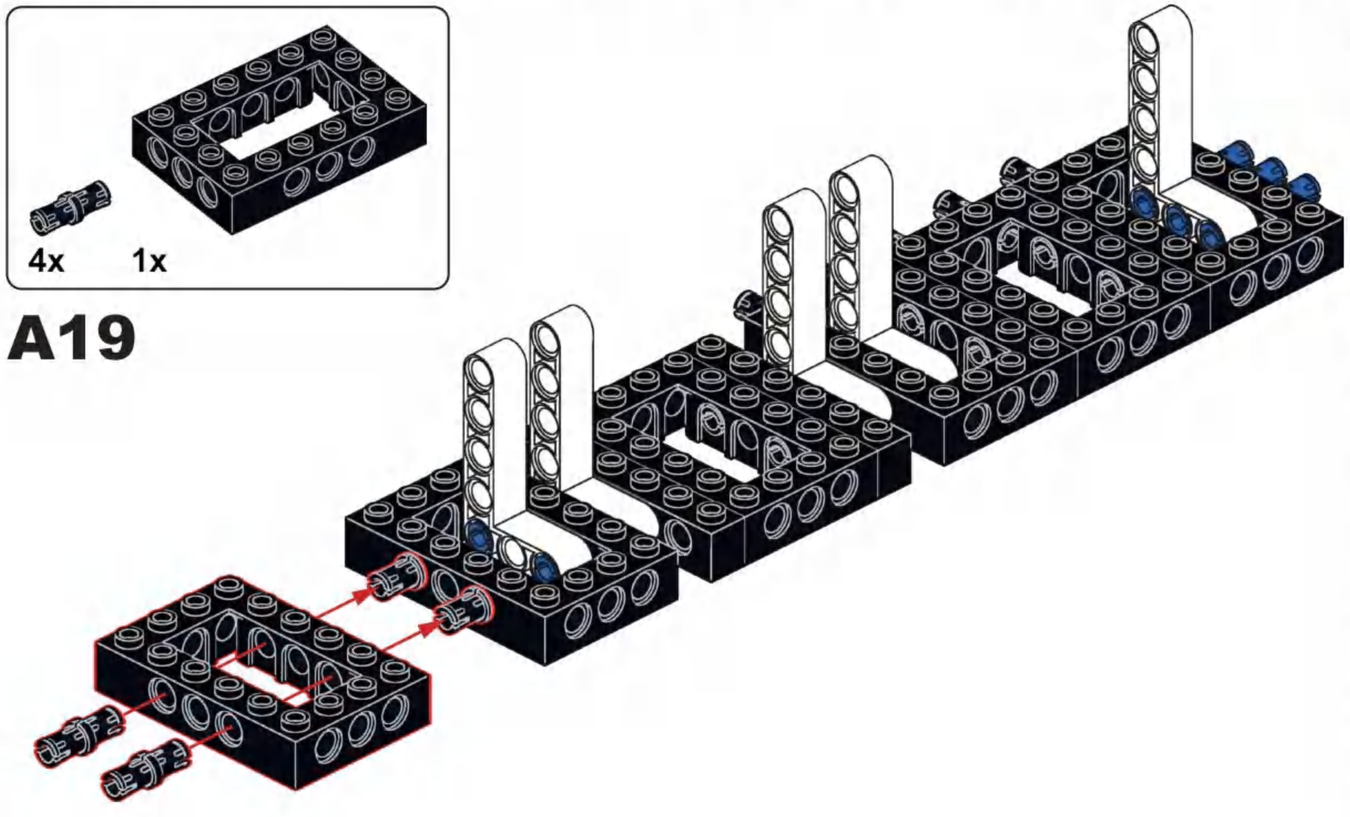

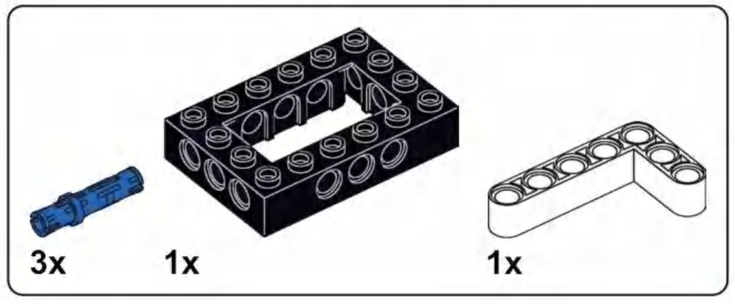

A20

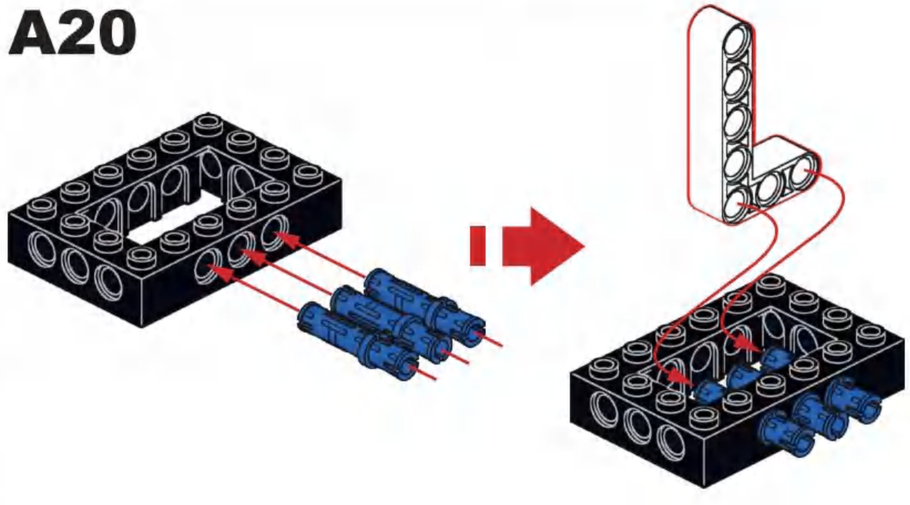

A21

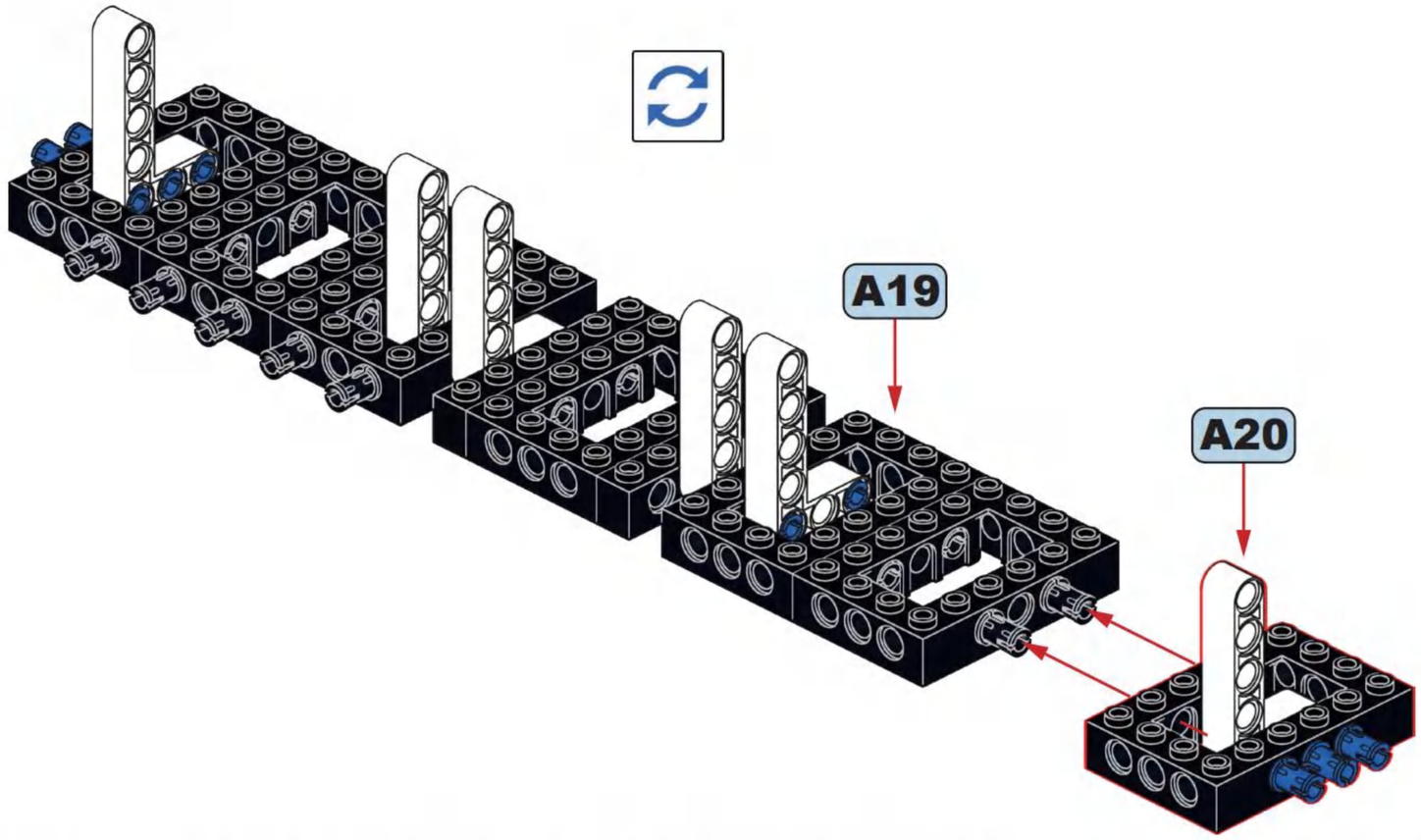

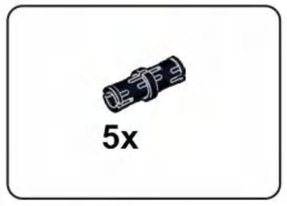

A22

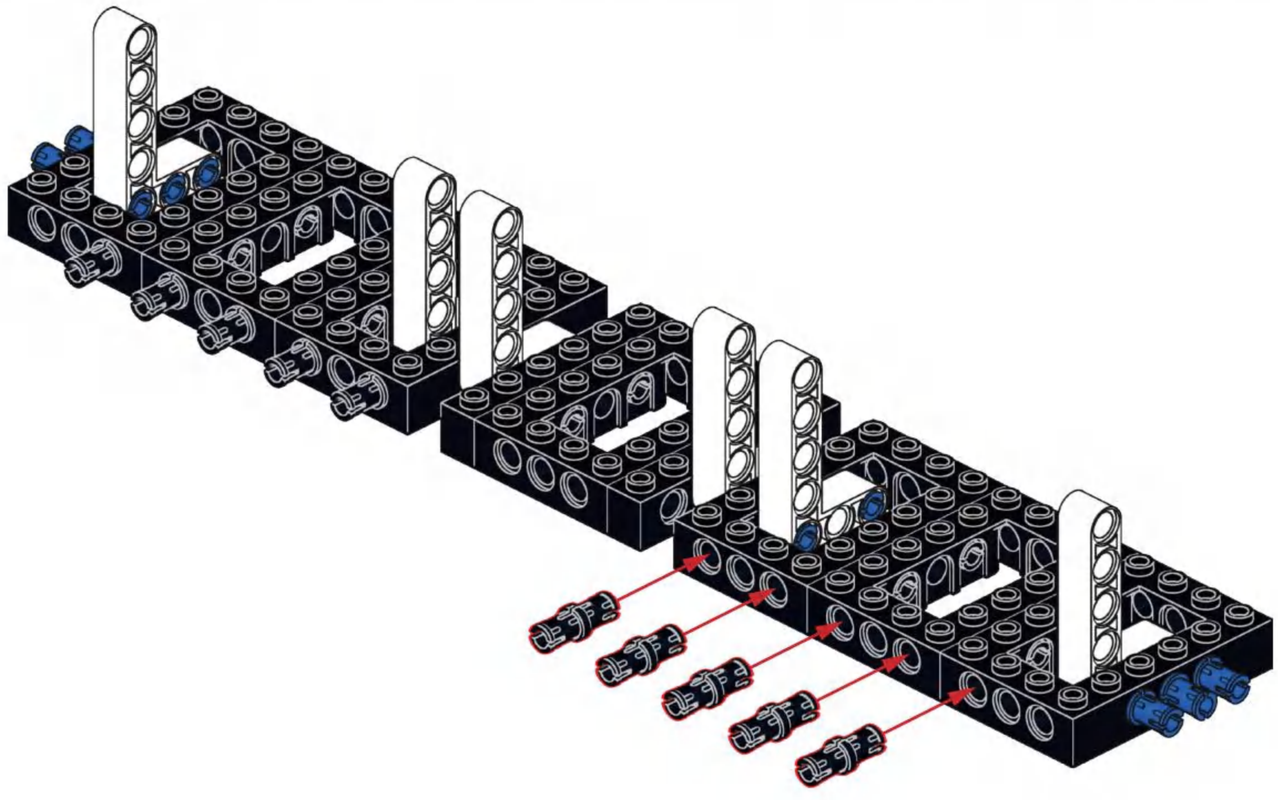

A23

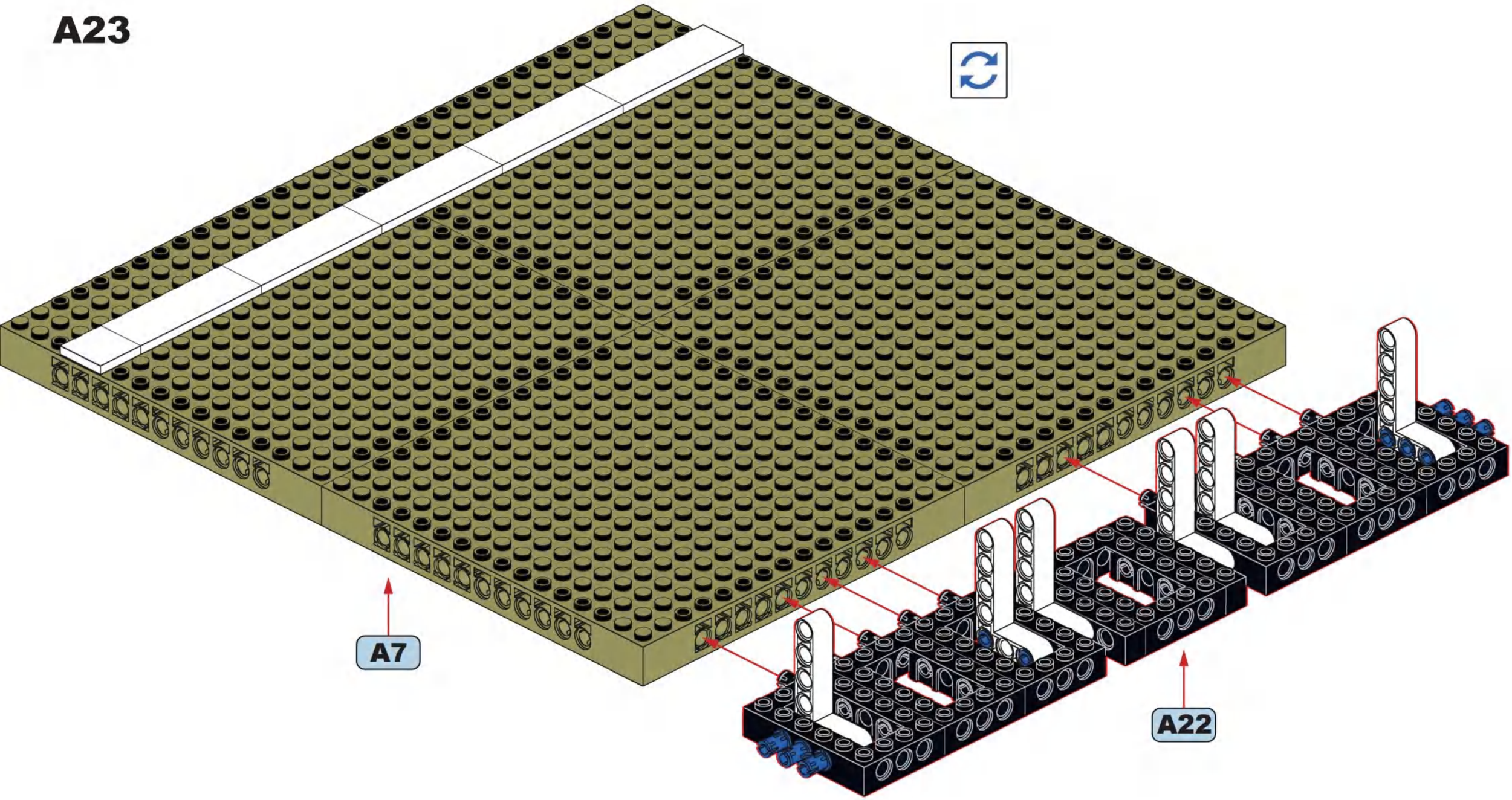

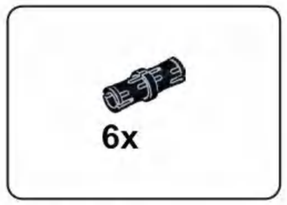

A24

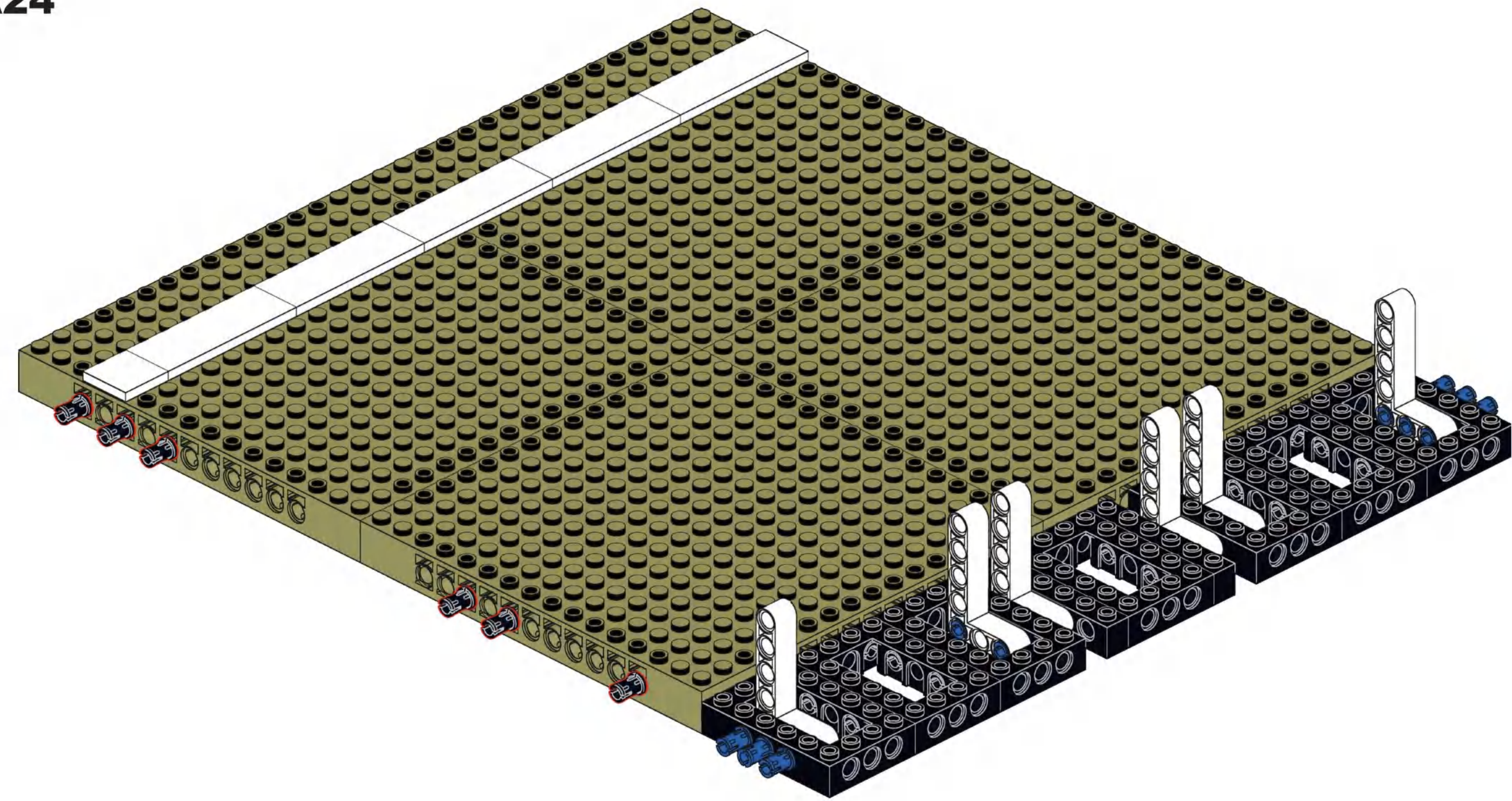

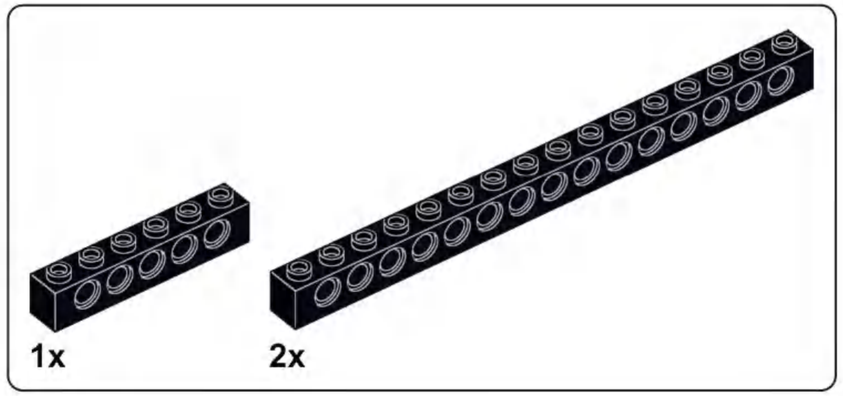

A25

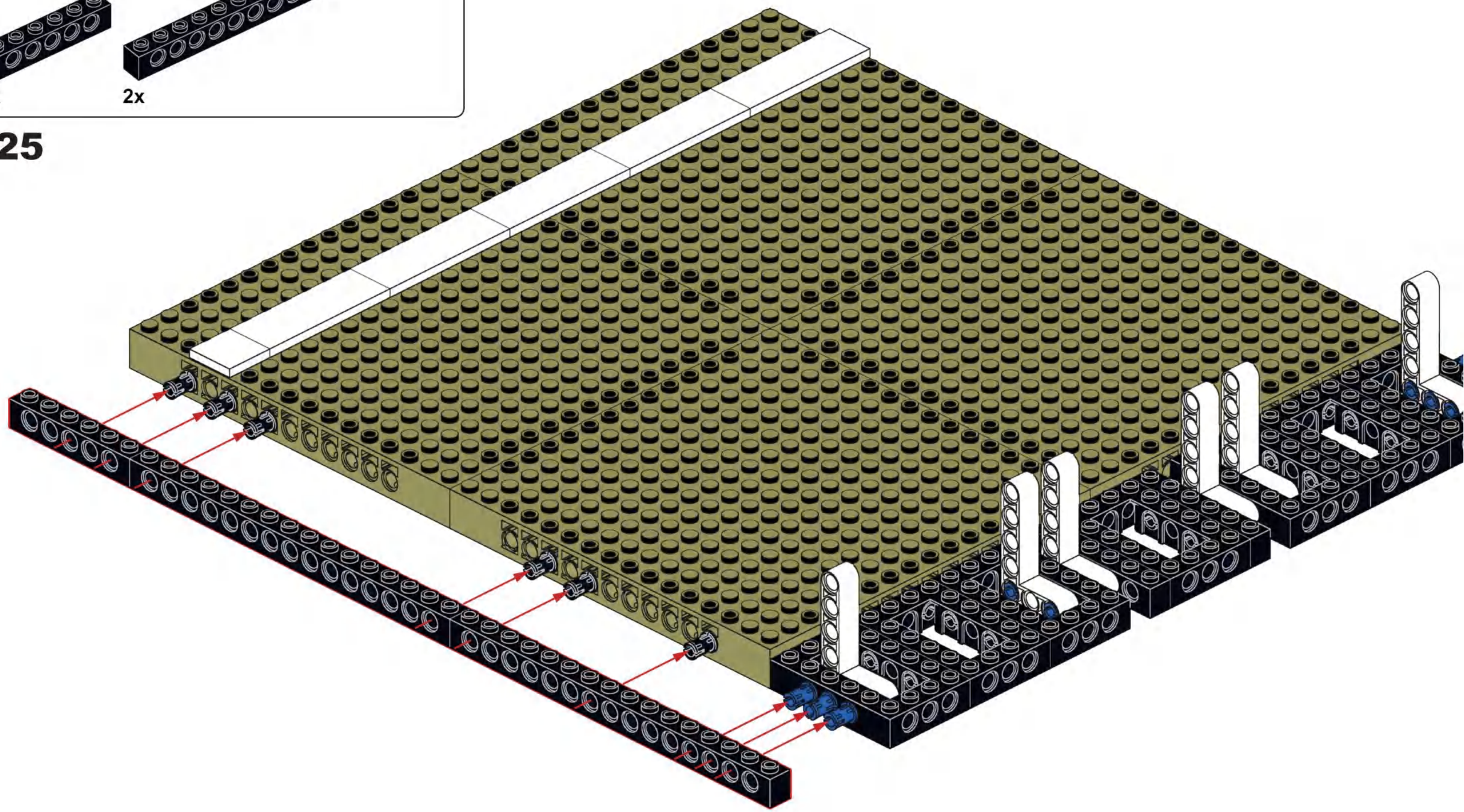

A26

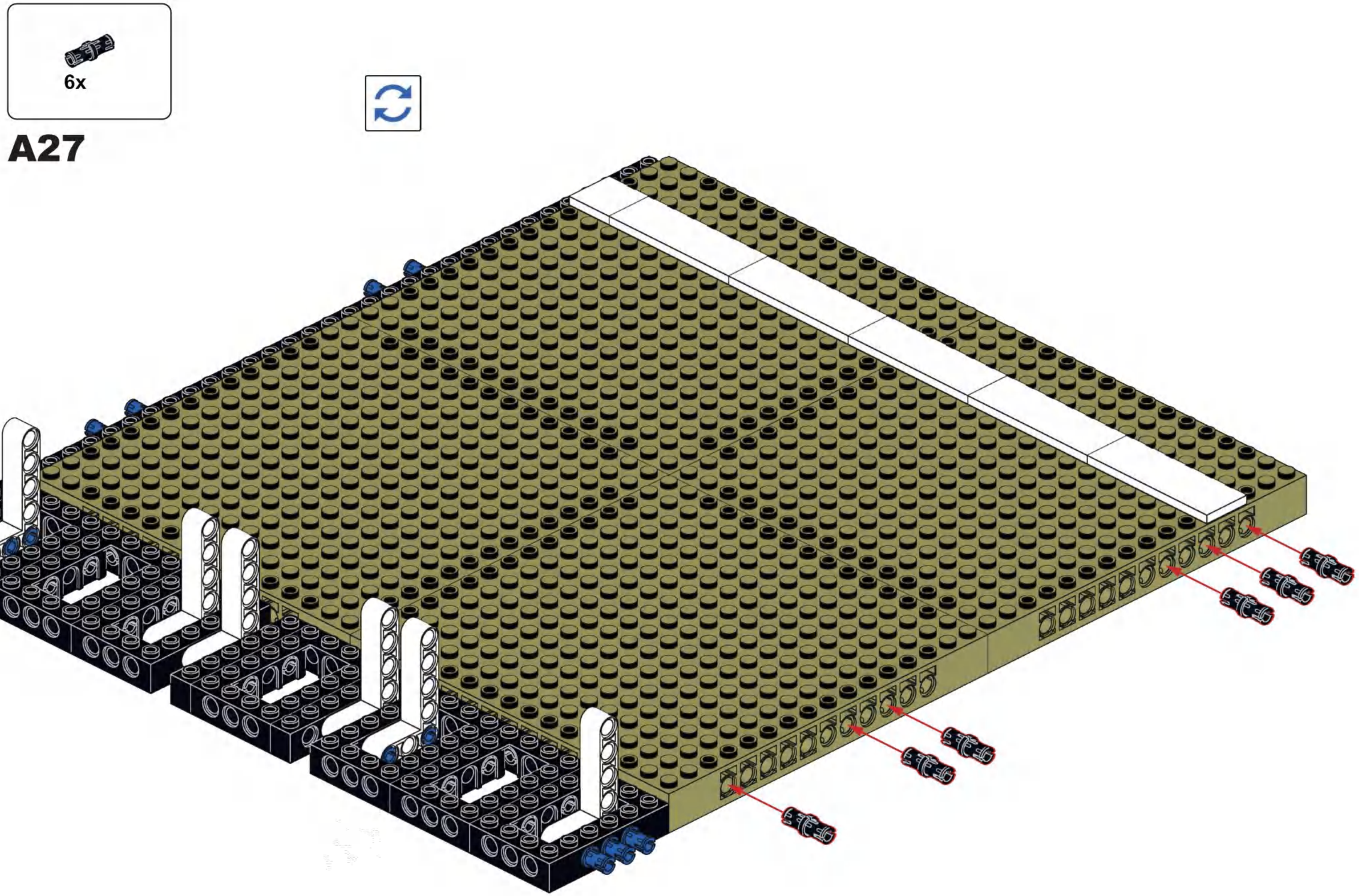
6x
A27

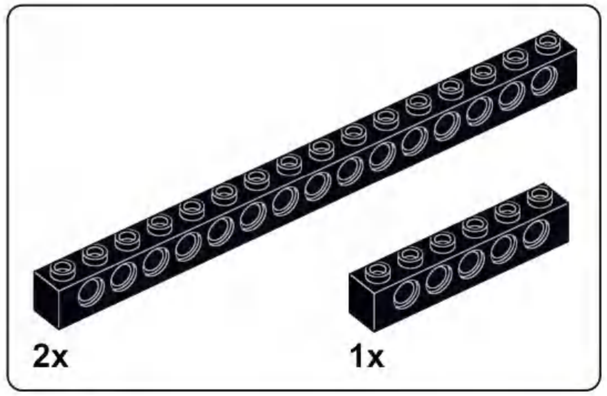

A28

A29

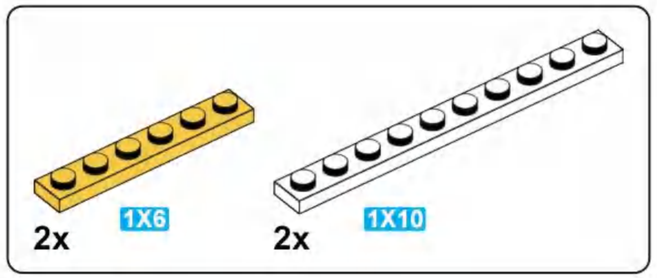

A30

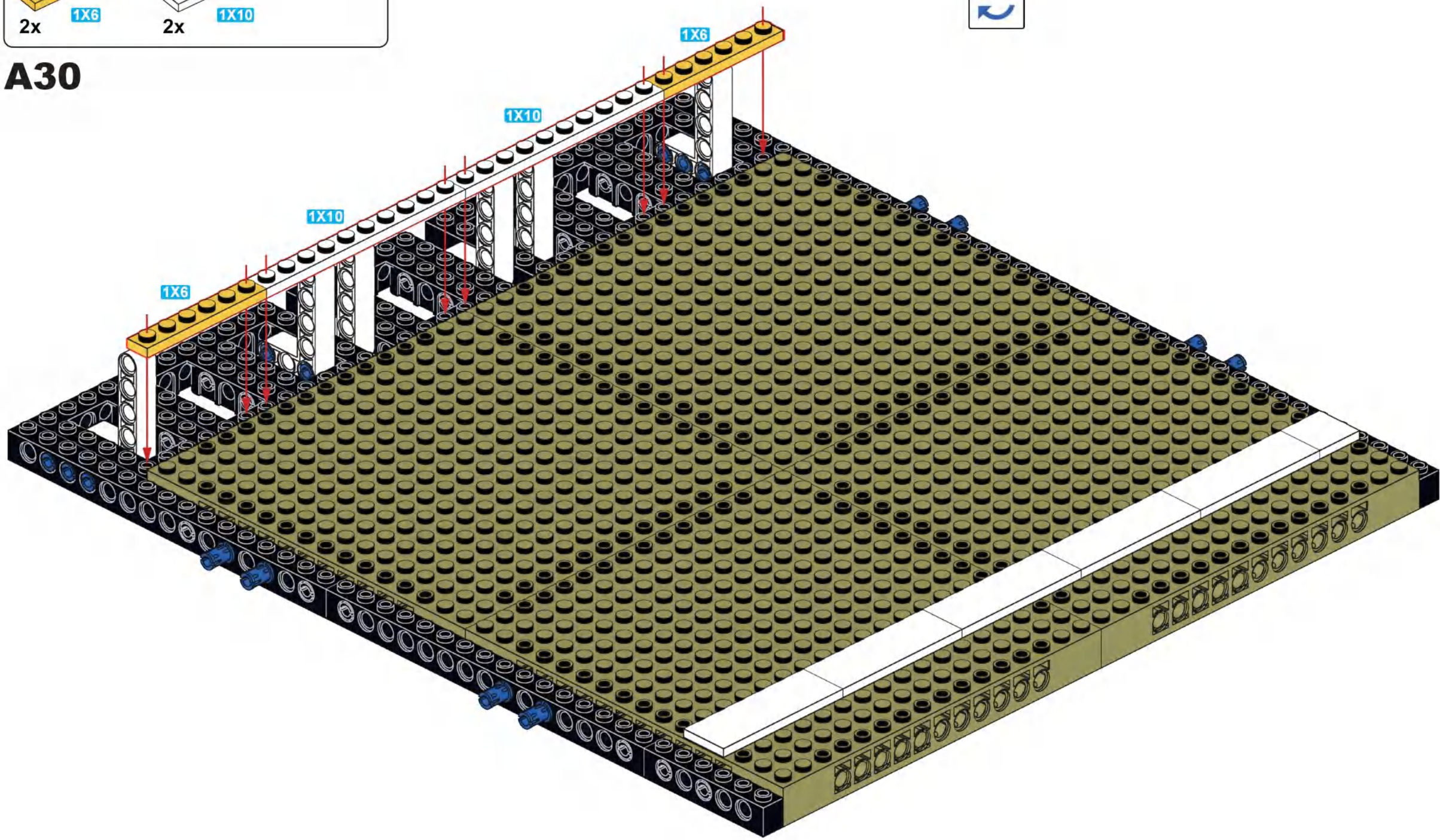

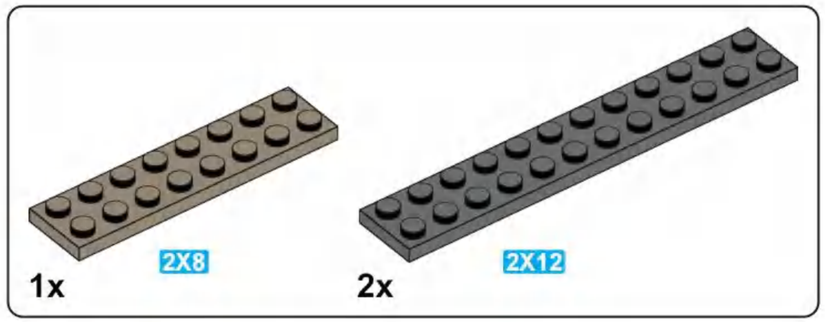

A31

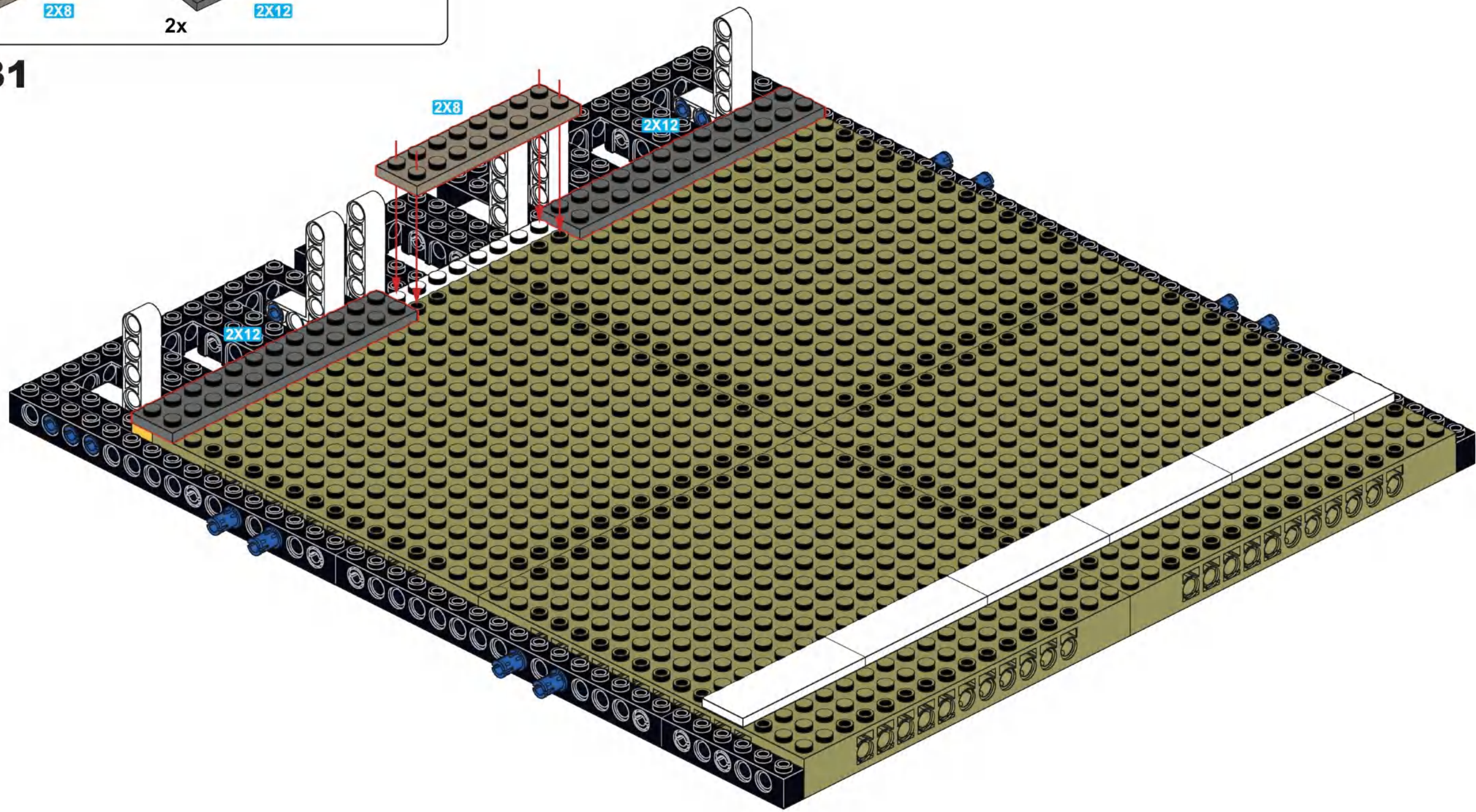

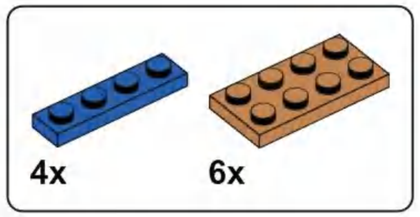

A32

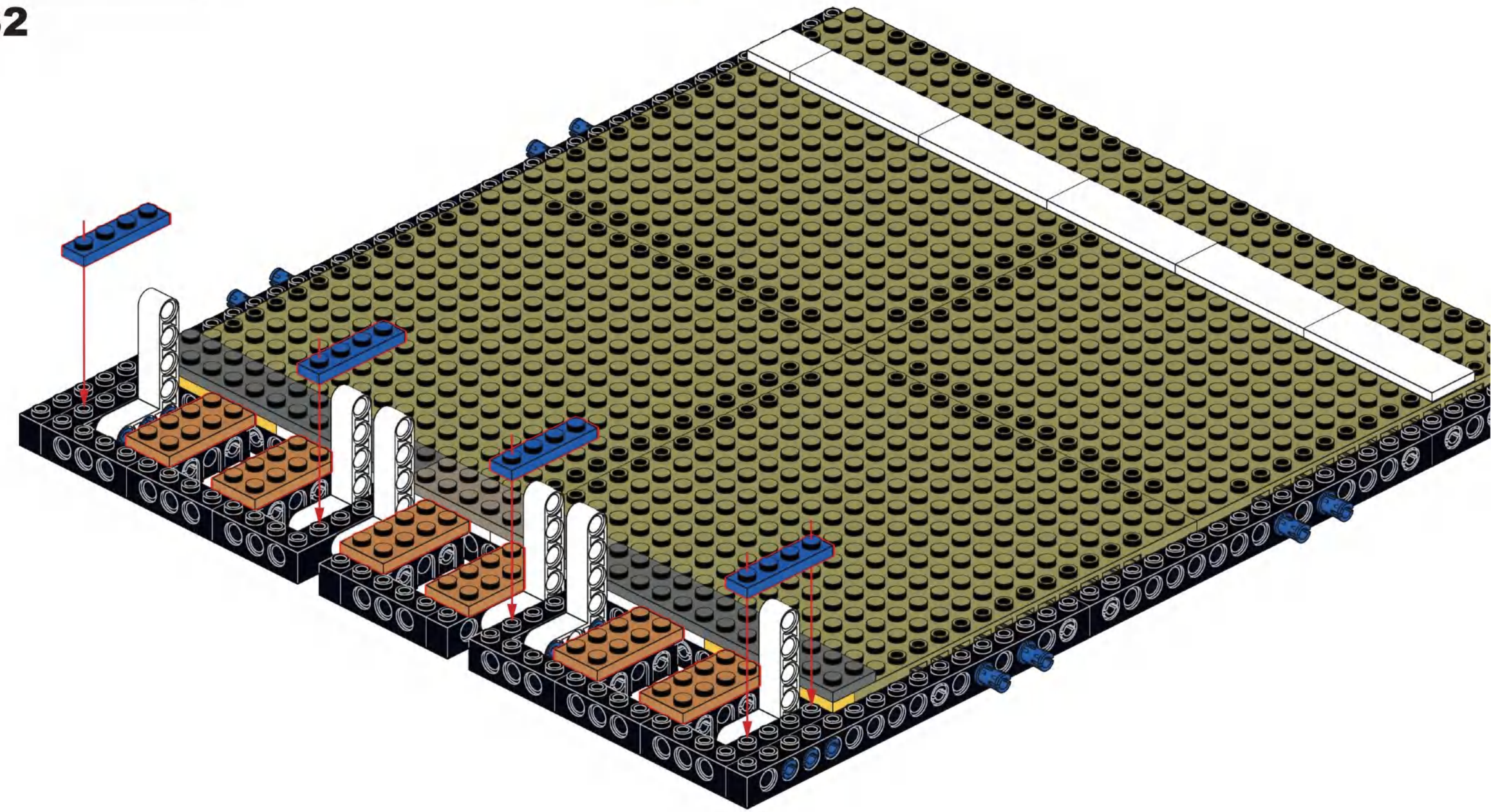

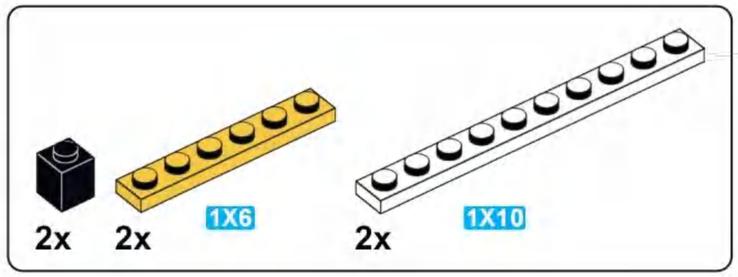

A33

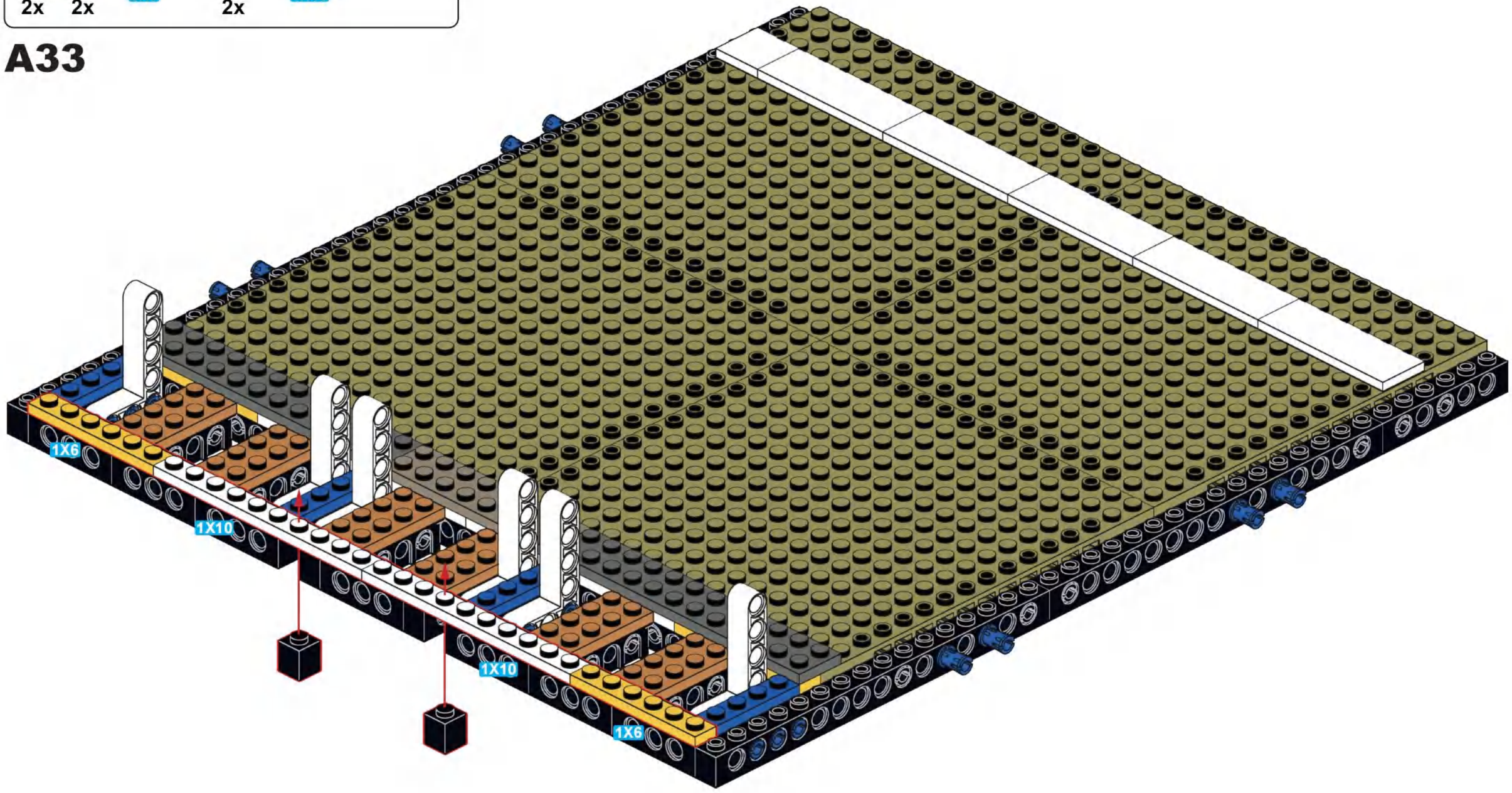

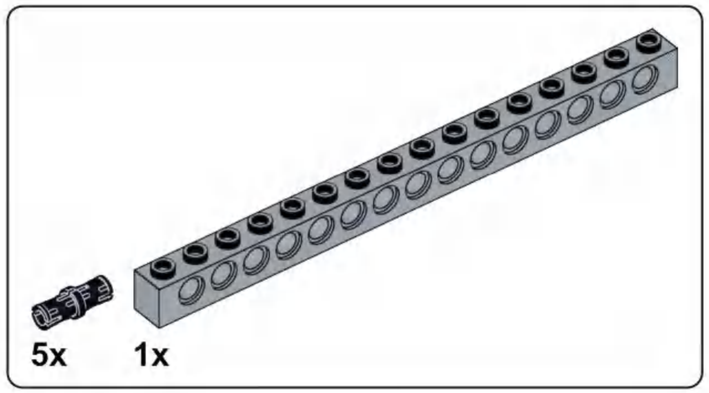

A34

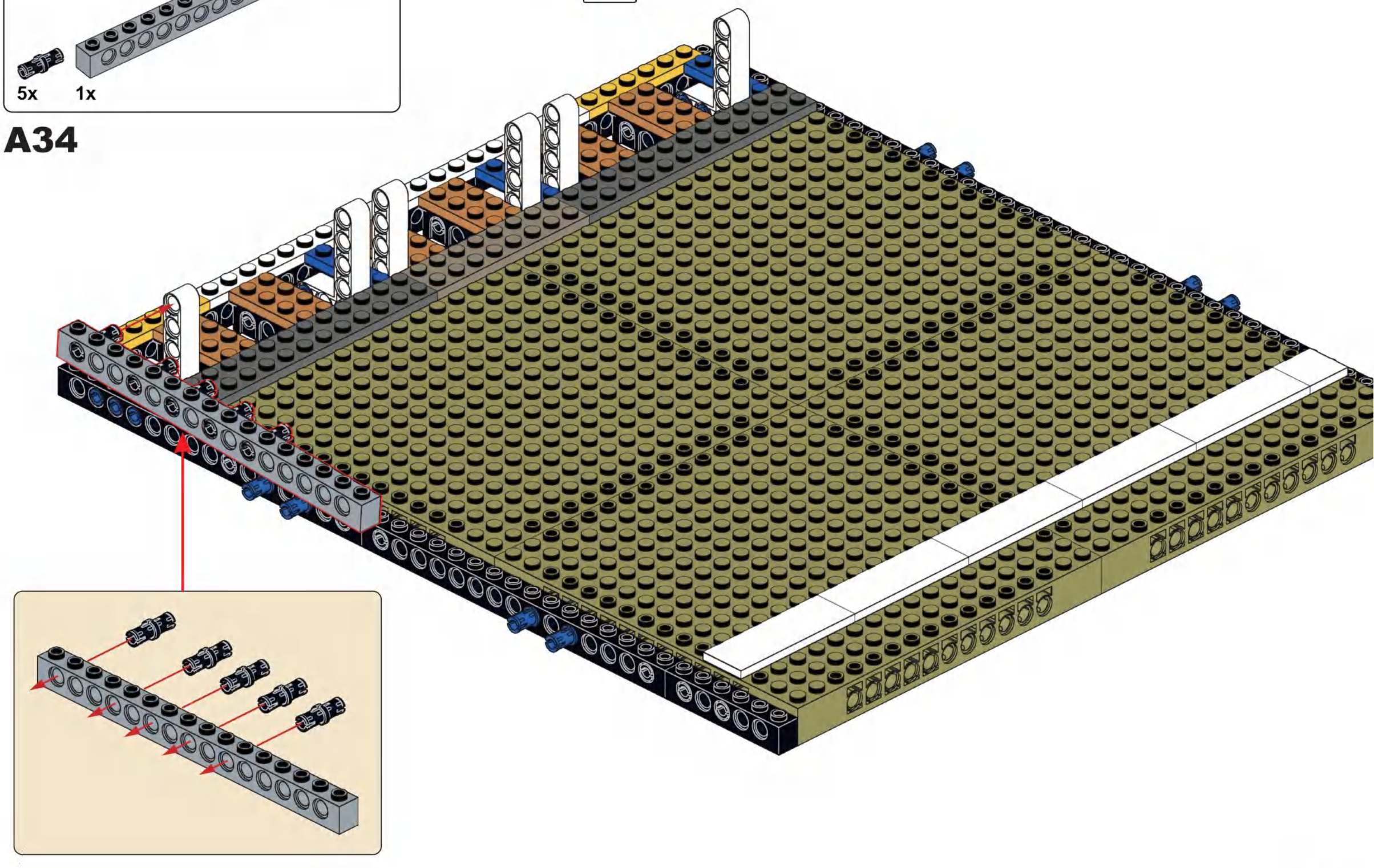

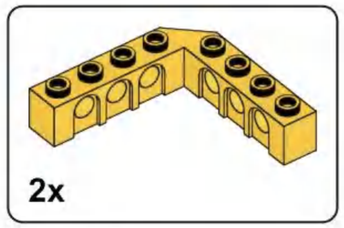

A35

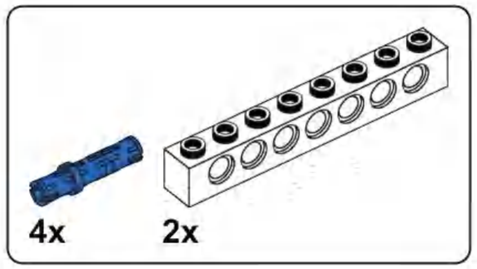

A36

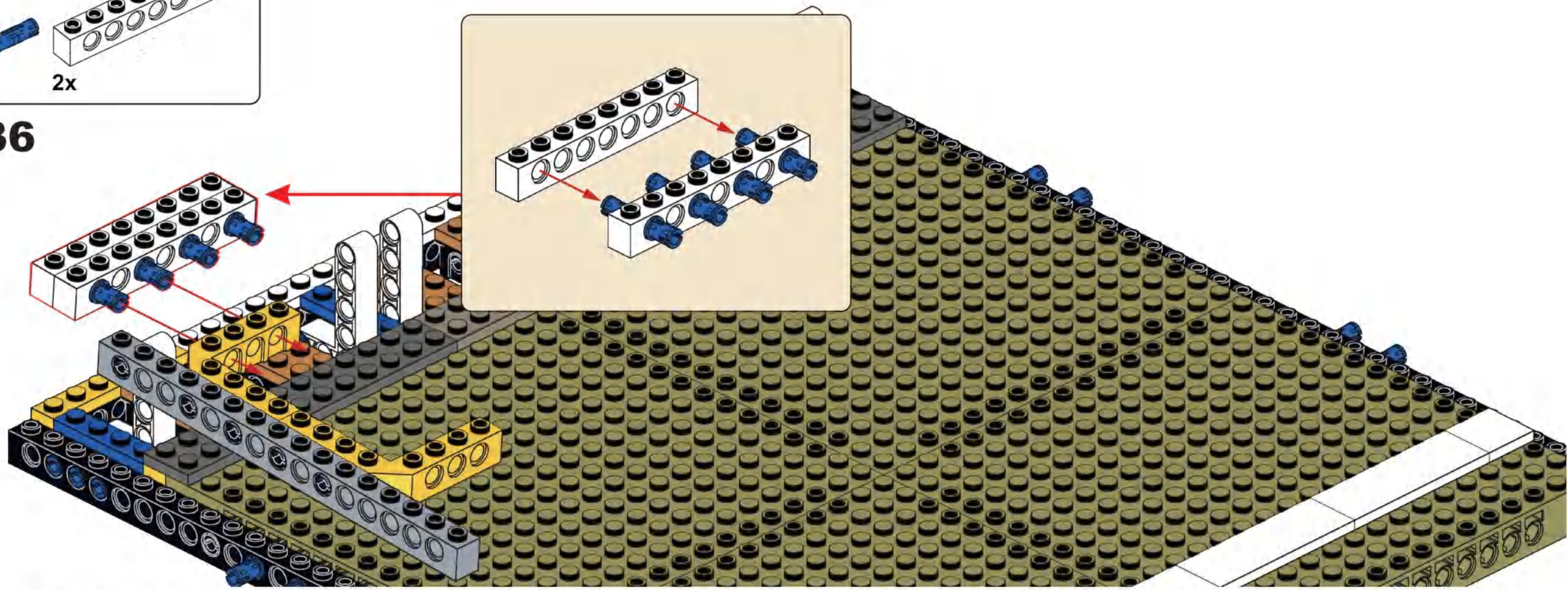

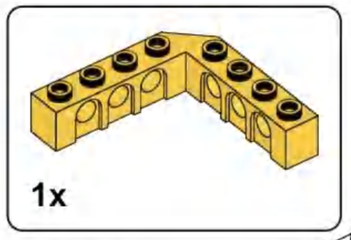

A37

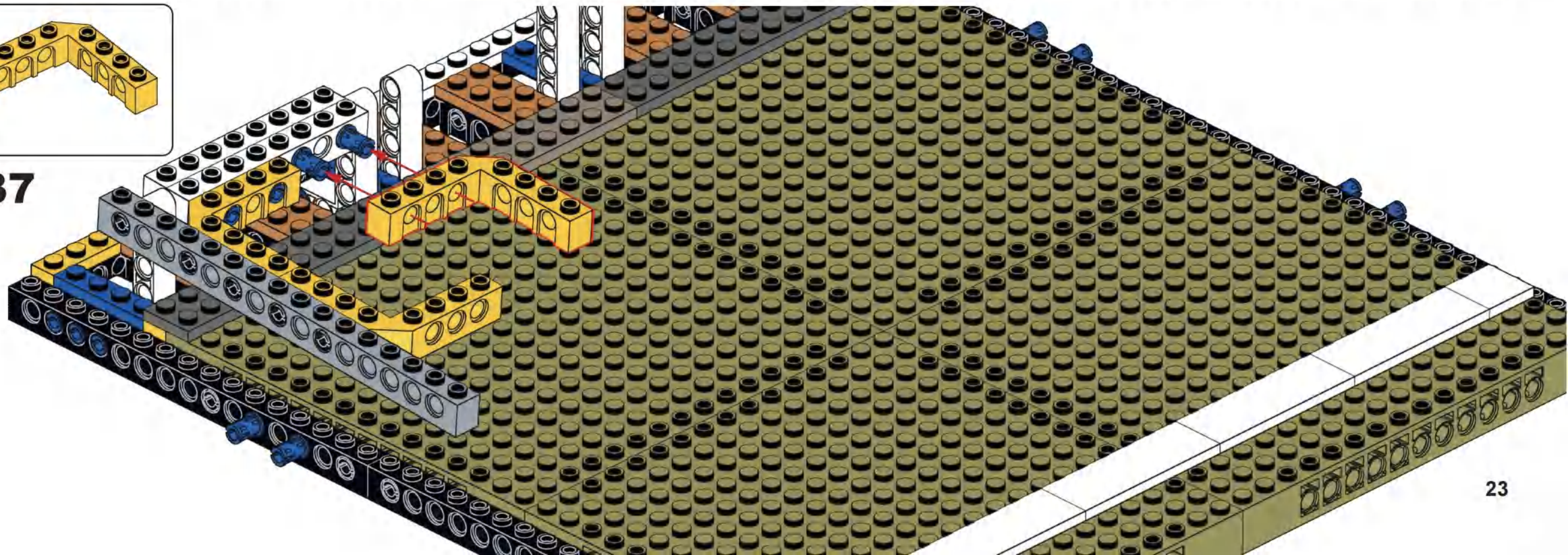

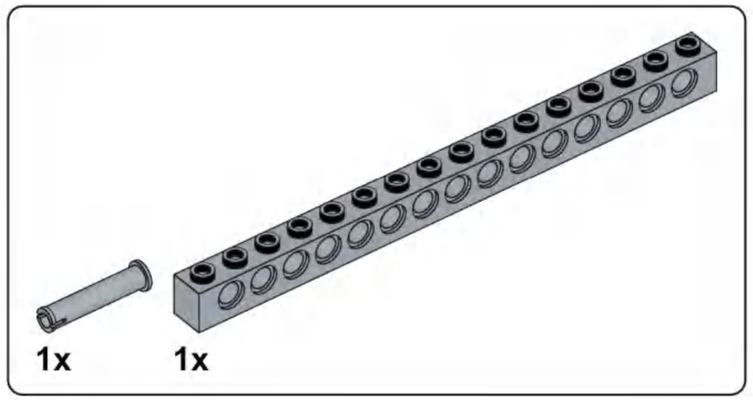

A38

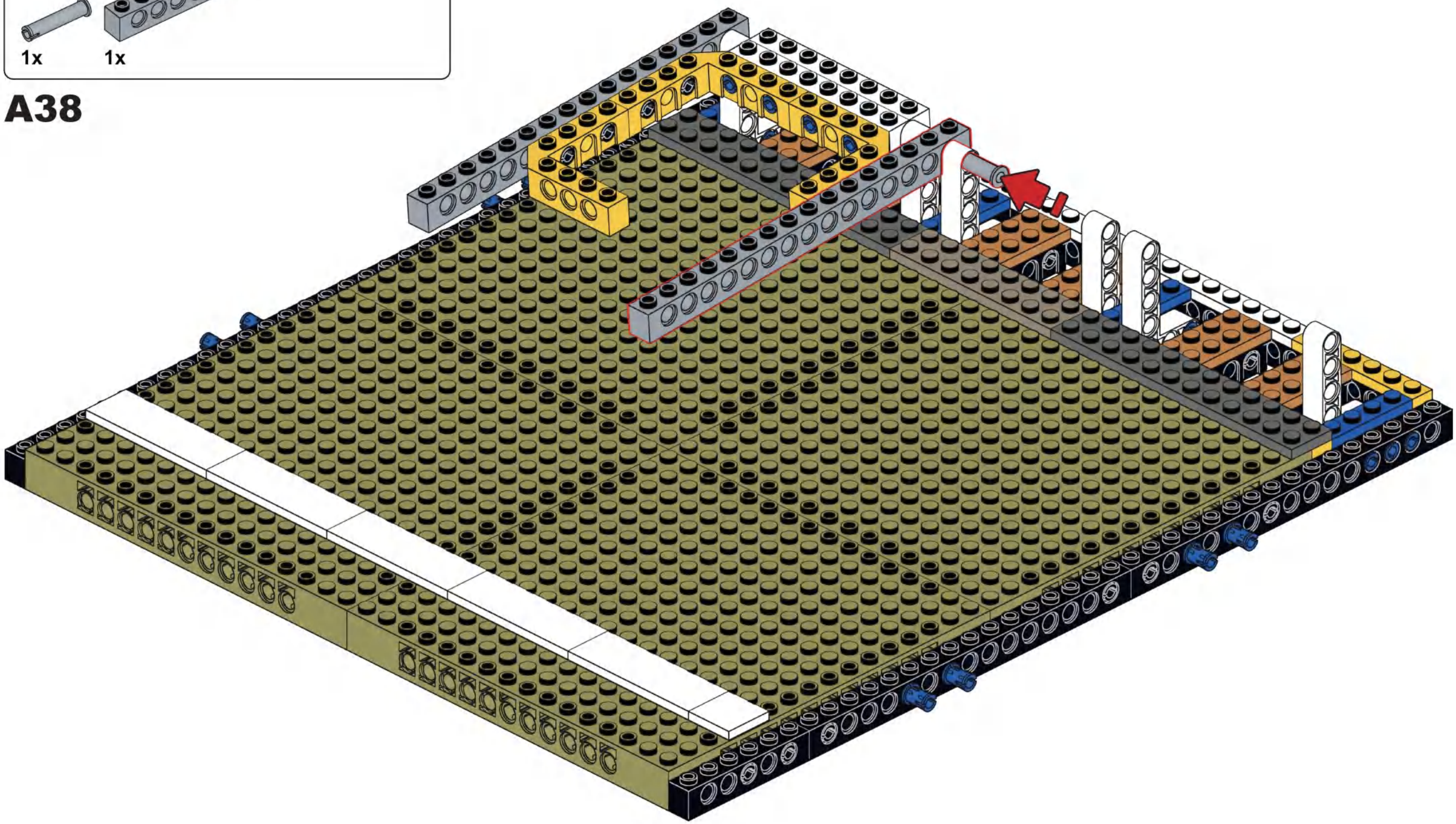

A39

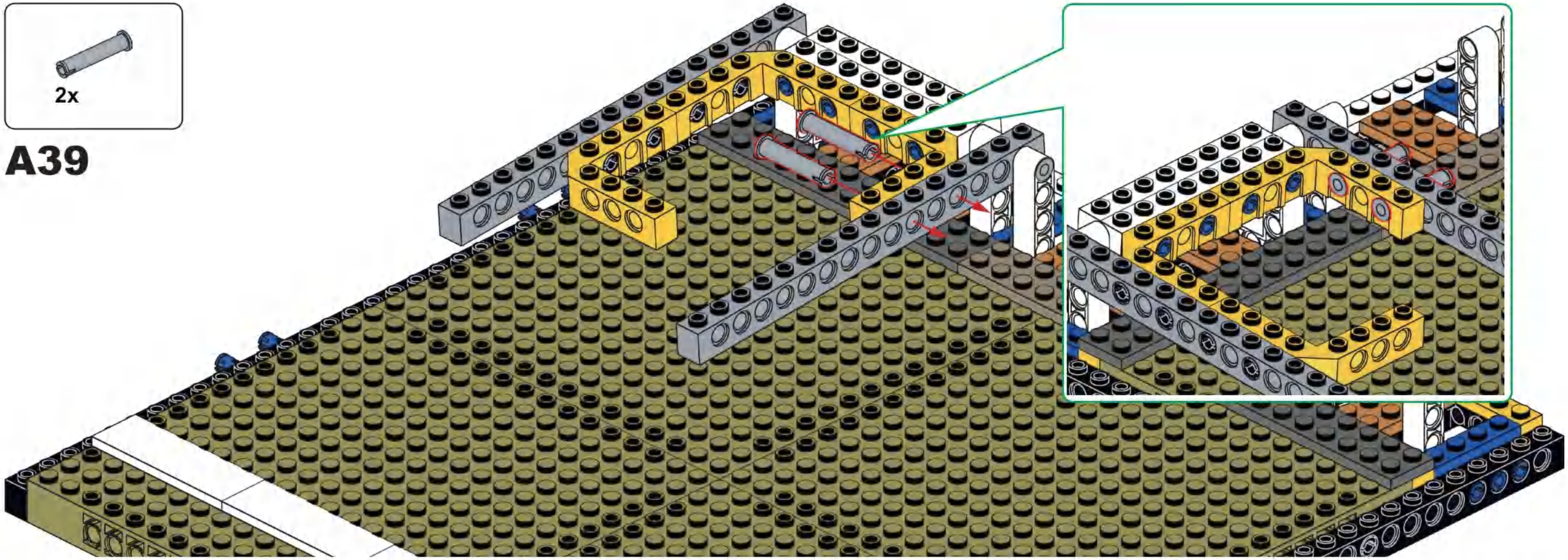

A40

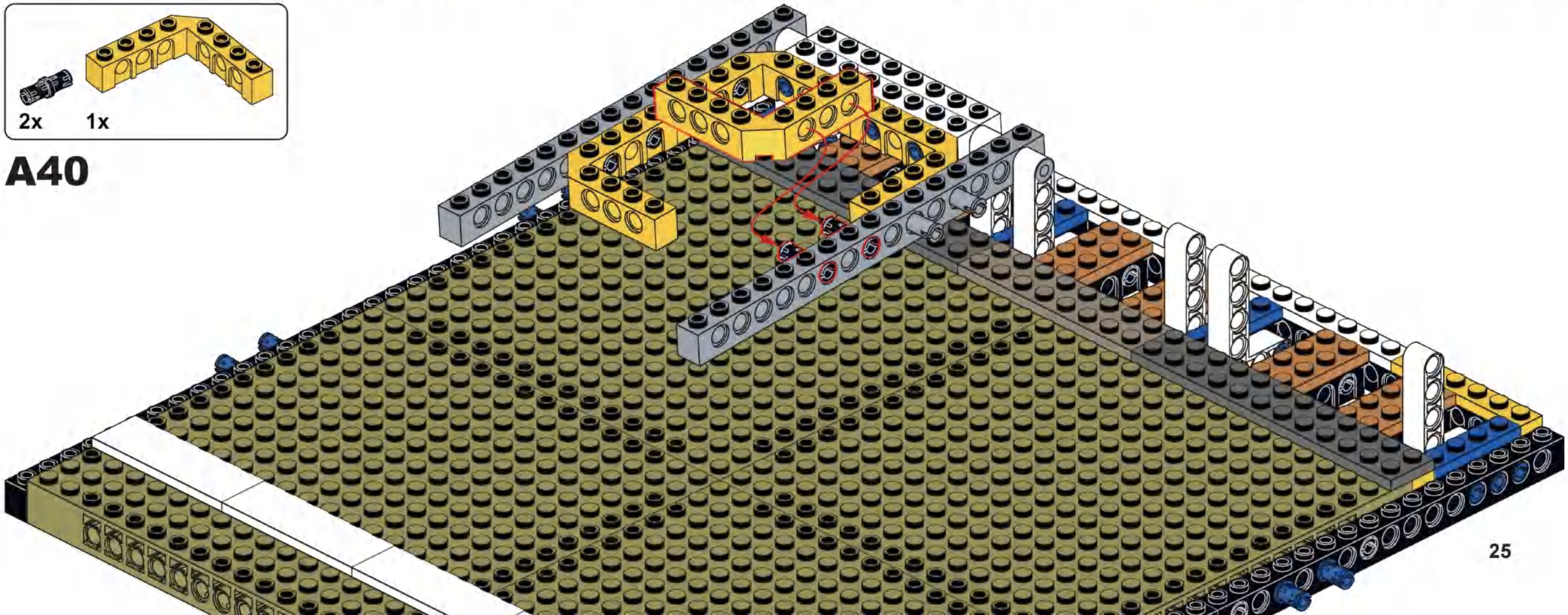

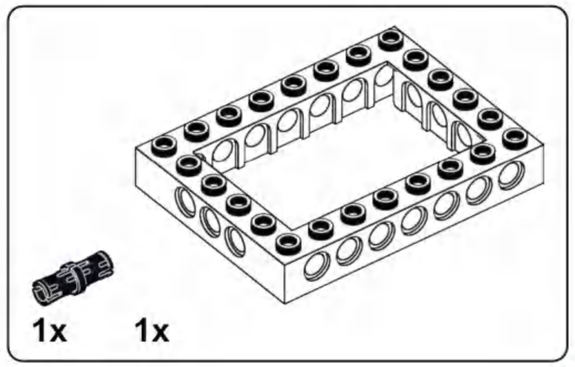

A41

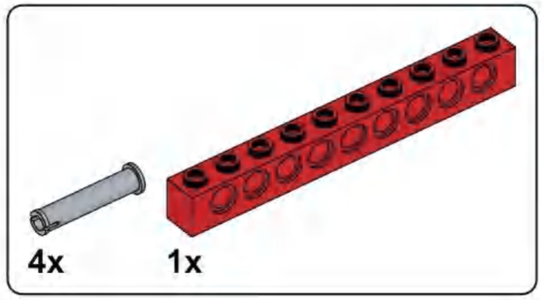

A42

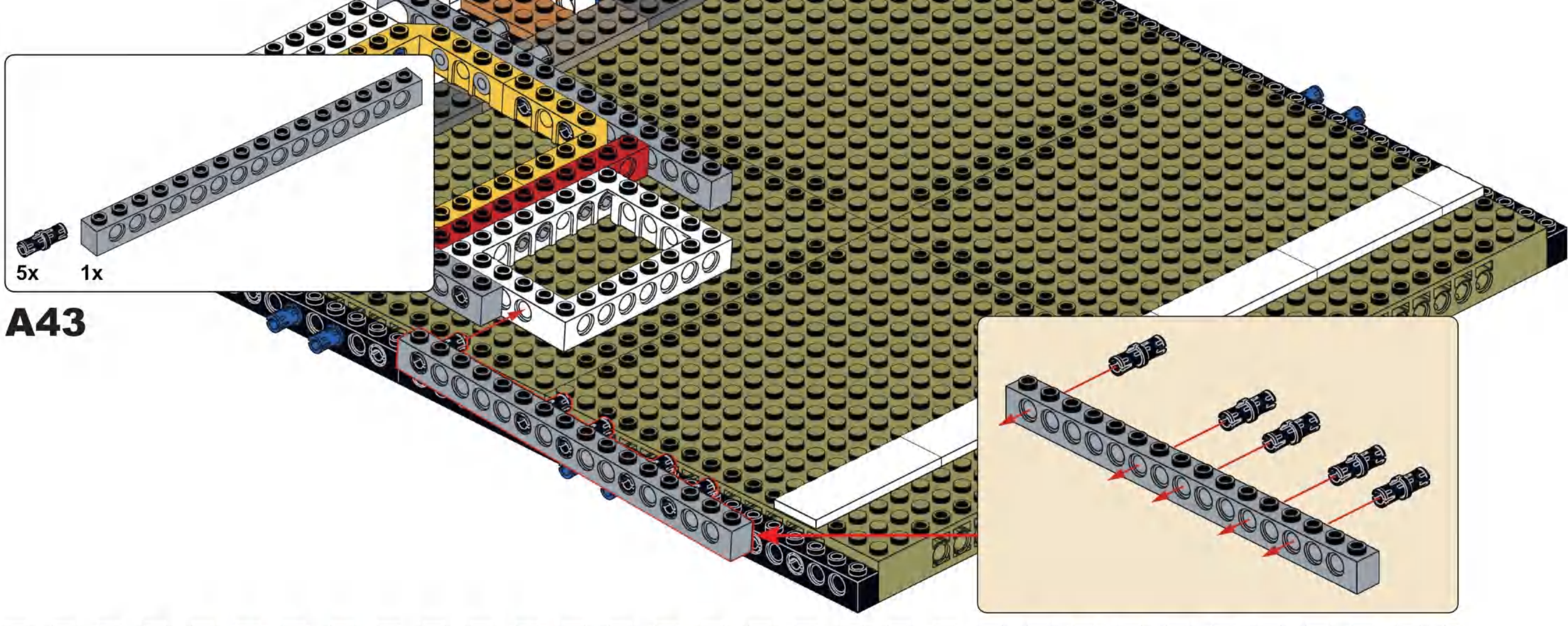

A43

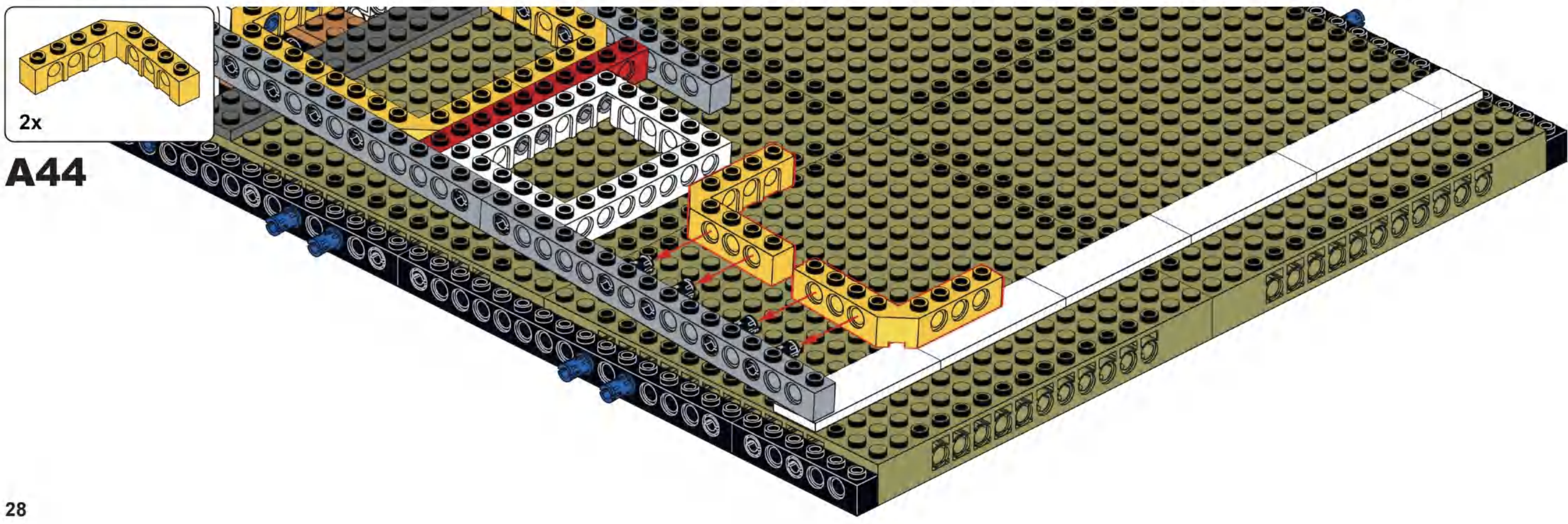

A44

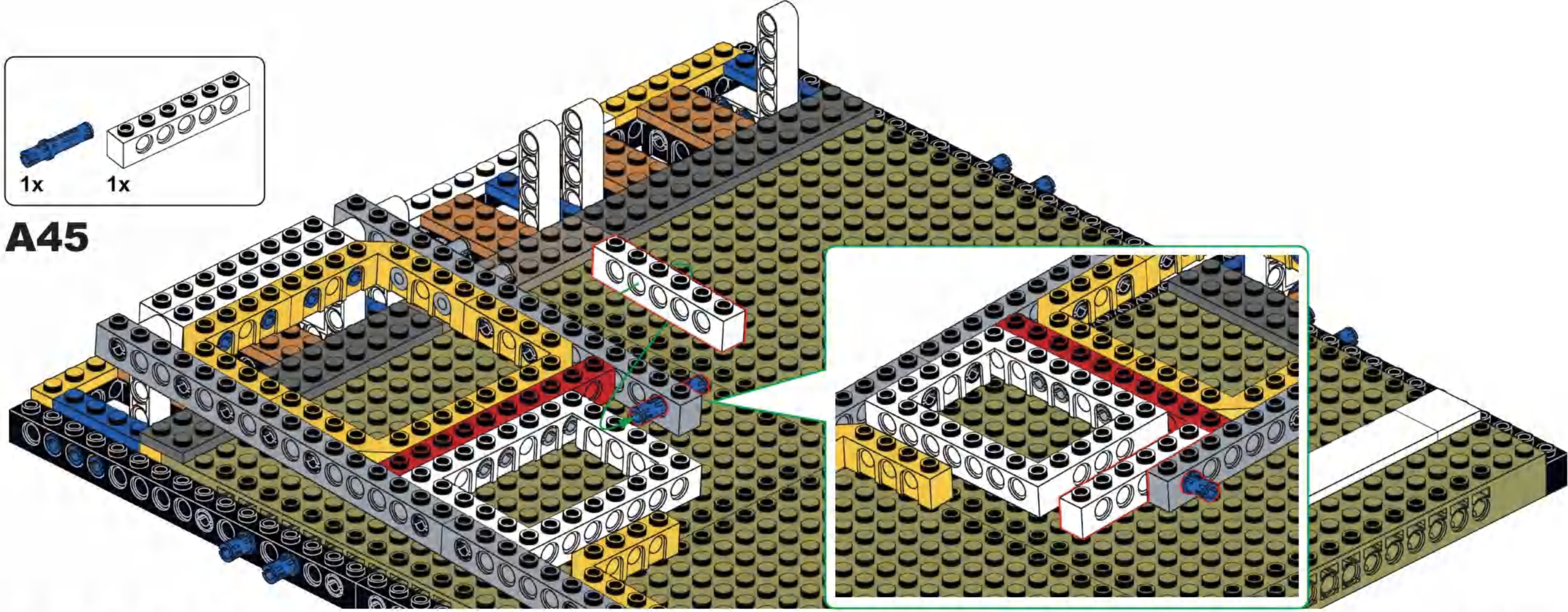
1x
1x
A45

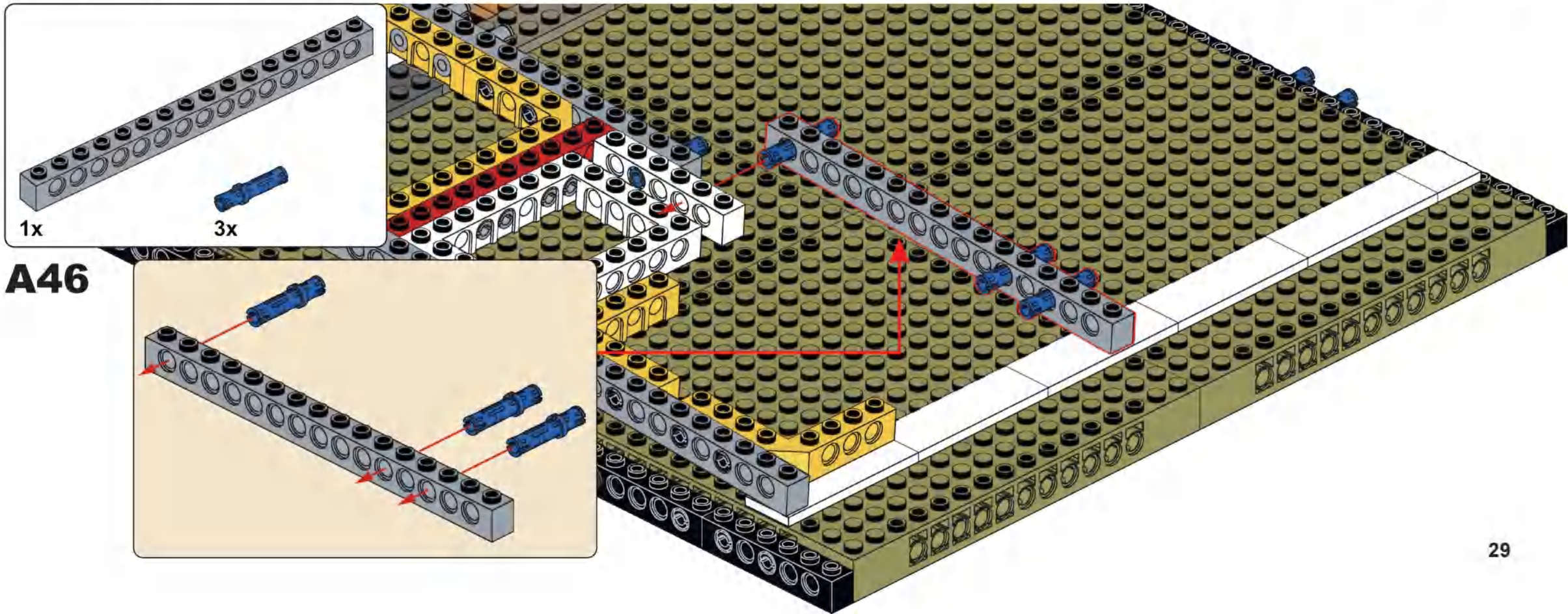
1x
3x
A46

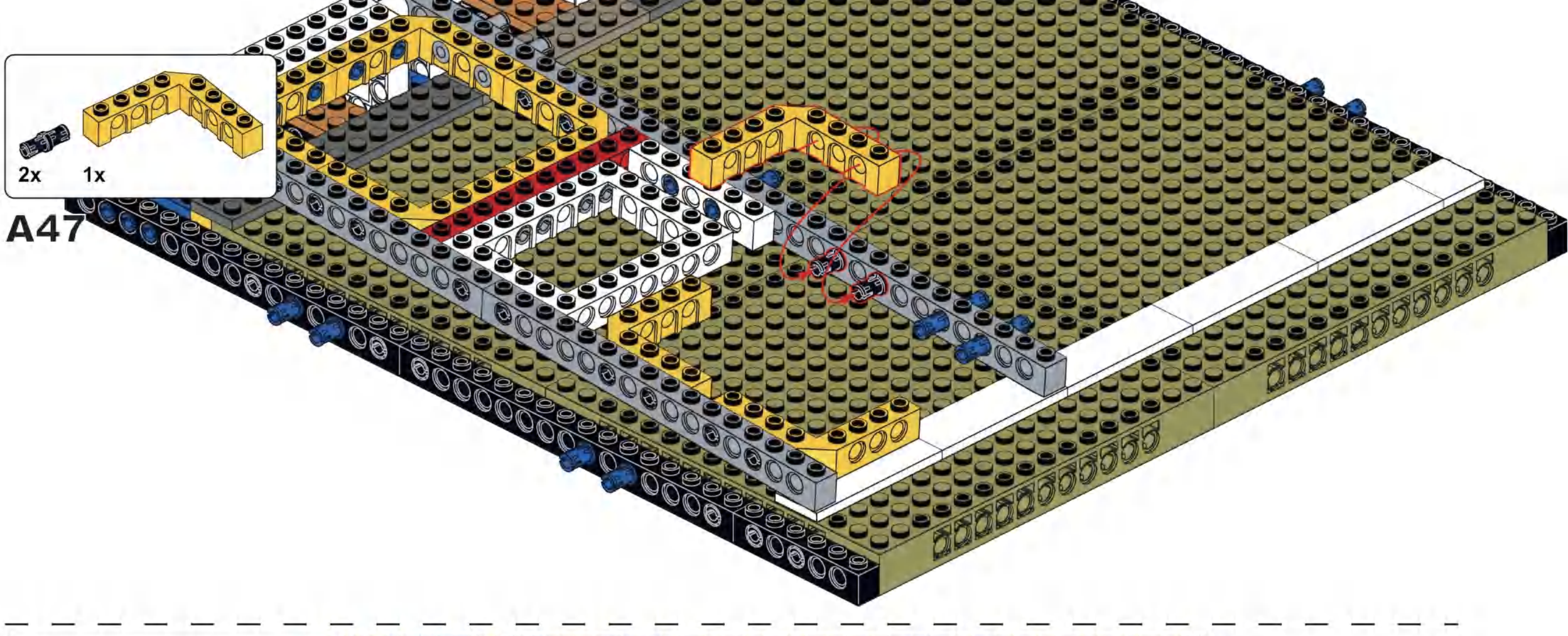
2x
1x
A47

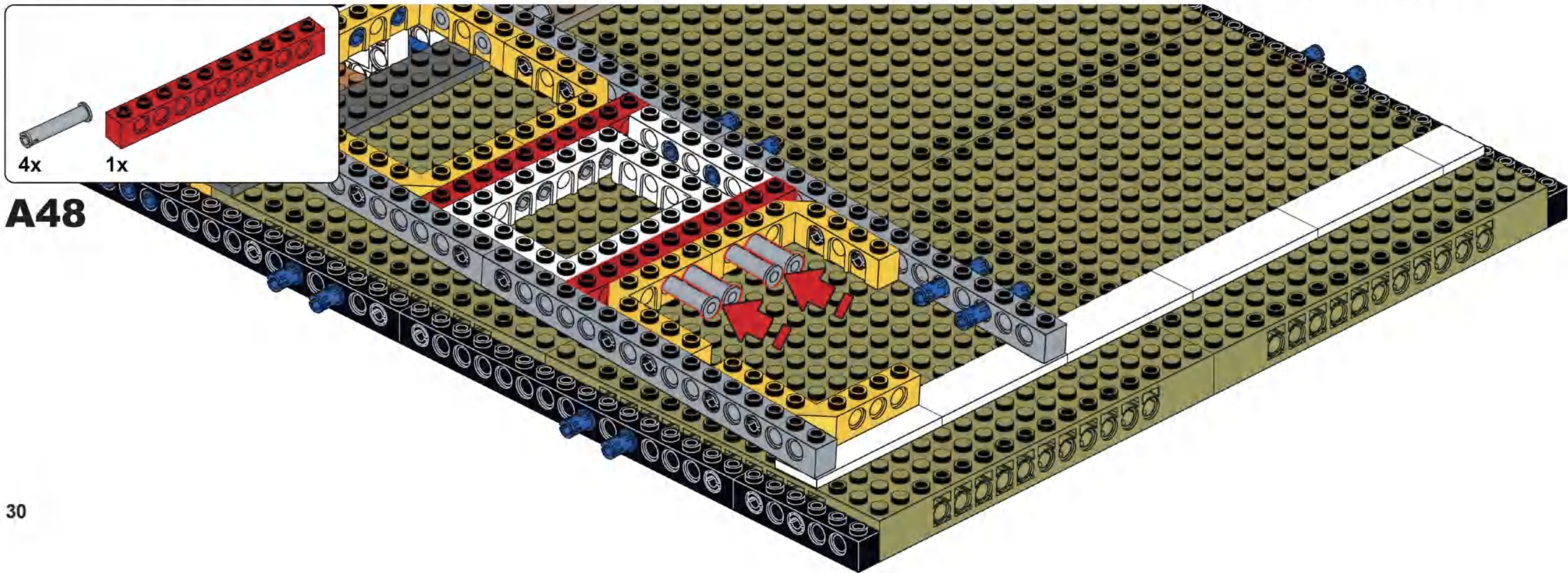
4x
1x
A48

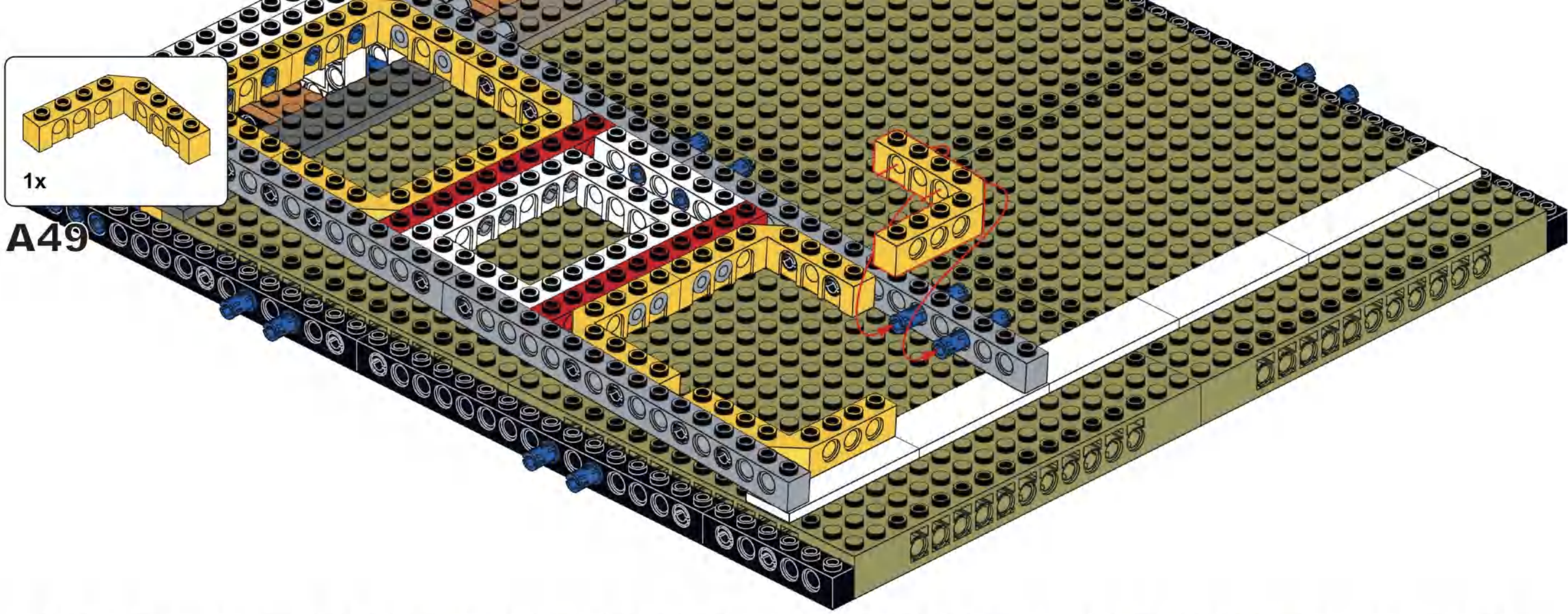
1x
A49

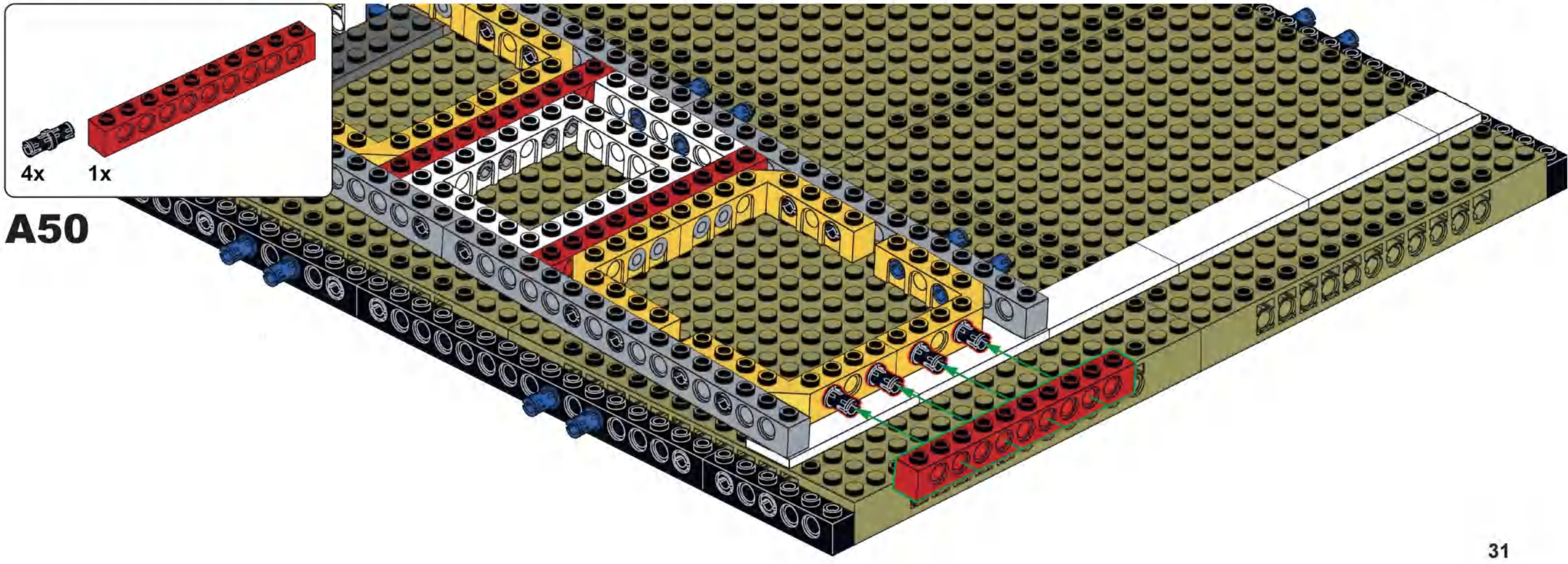
4x
1x
A50

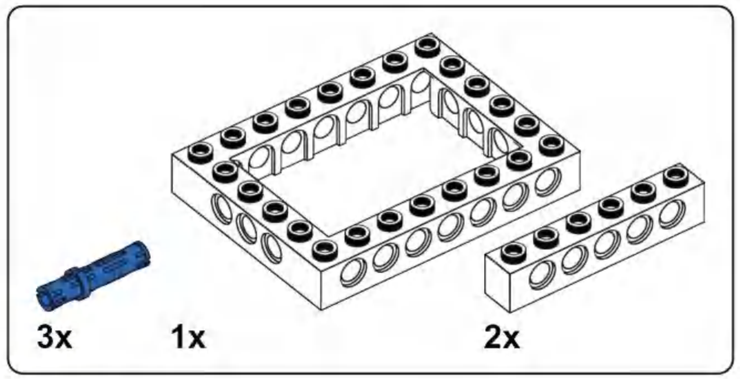

A51

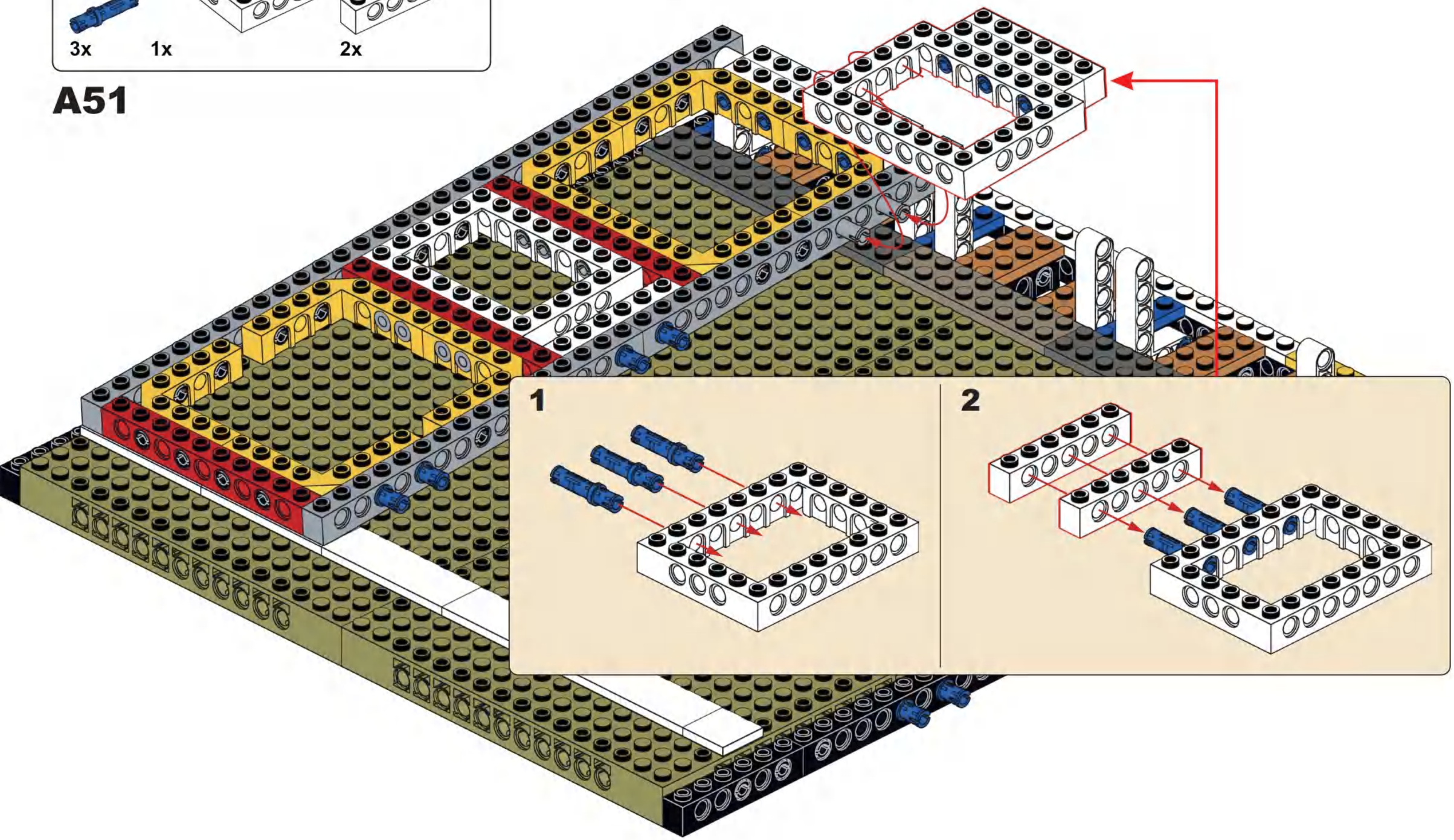

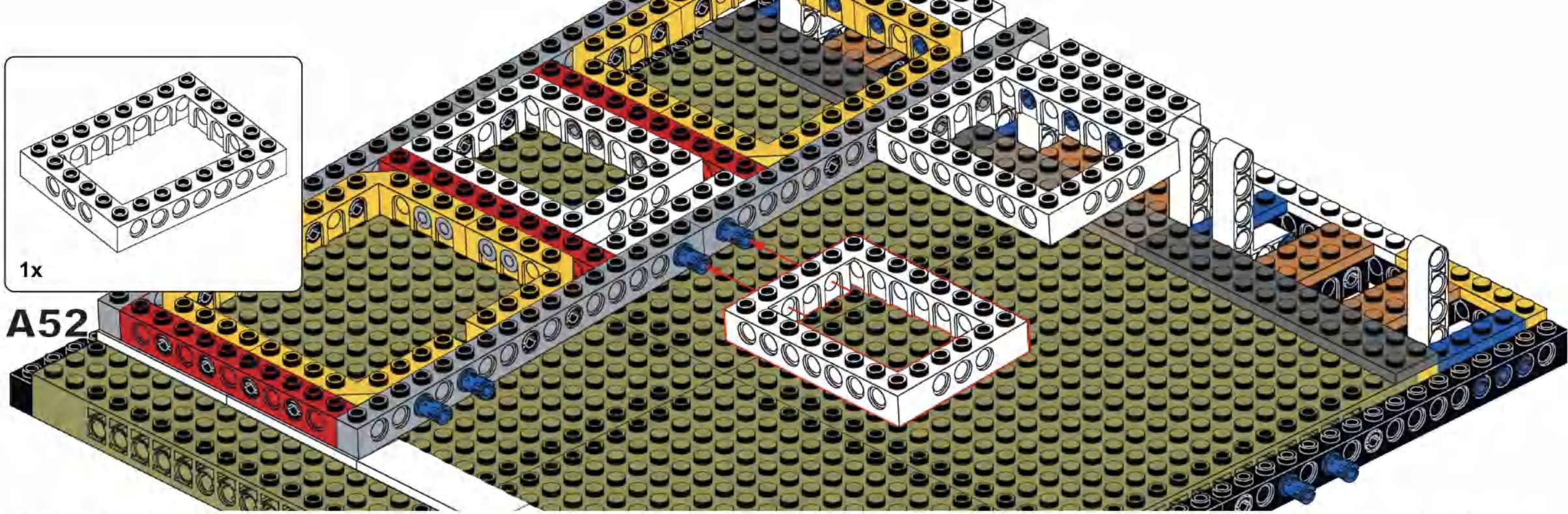
1x
A52

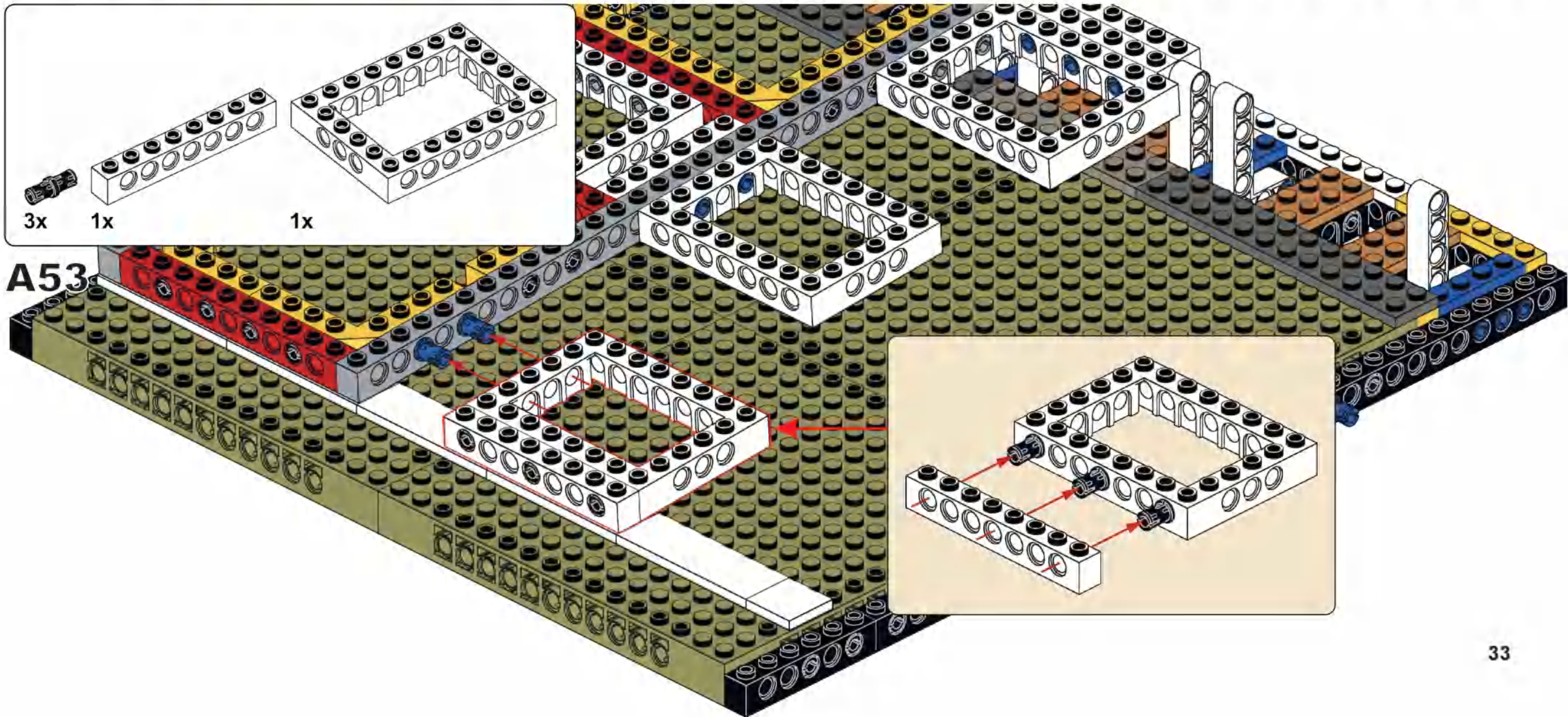
3x
1x
1x
A53

A54

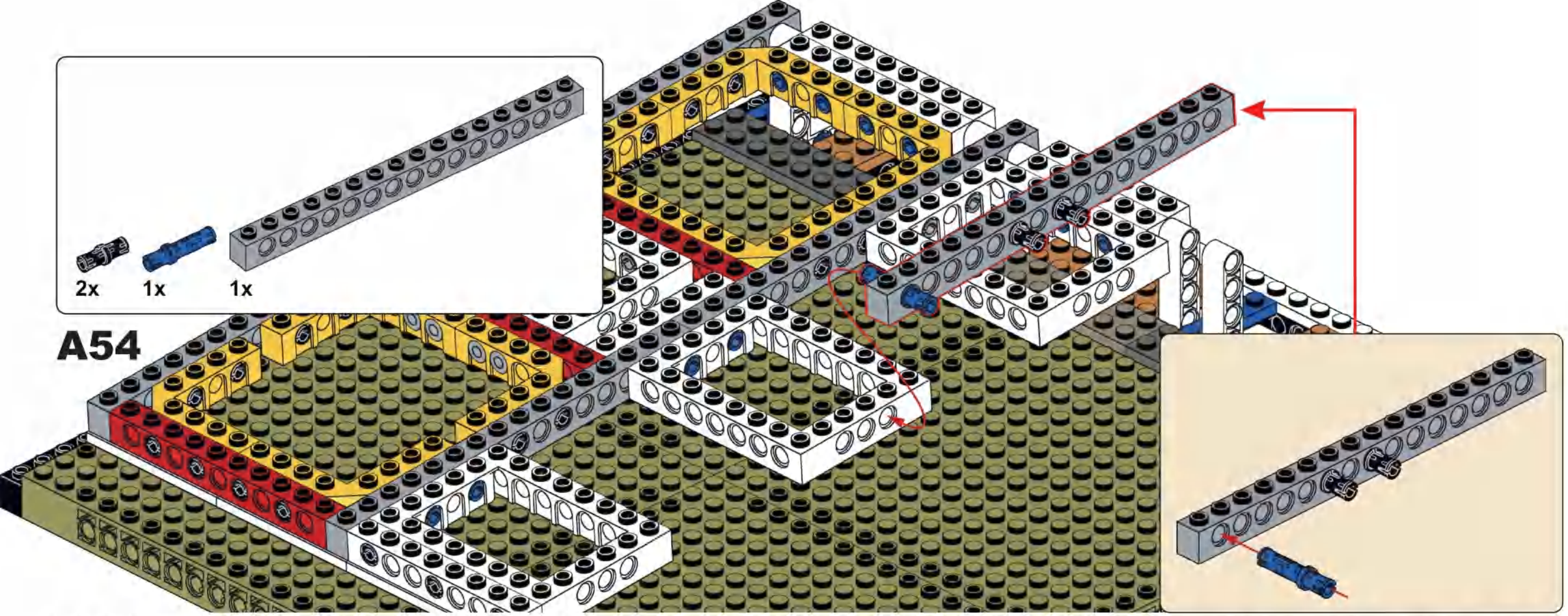

A55

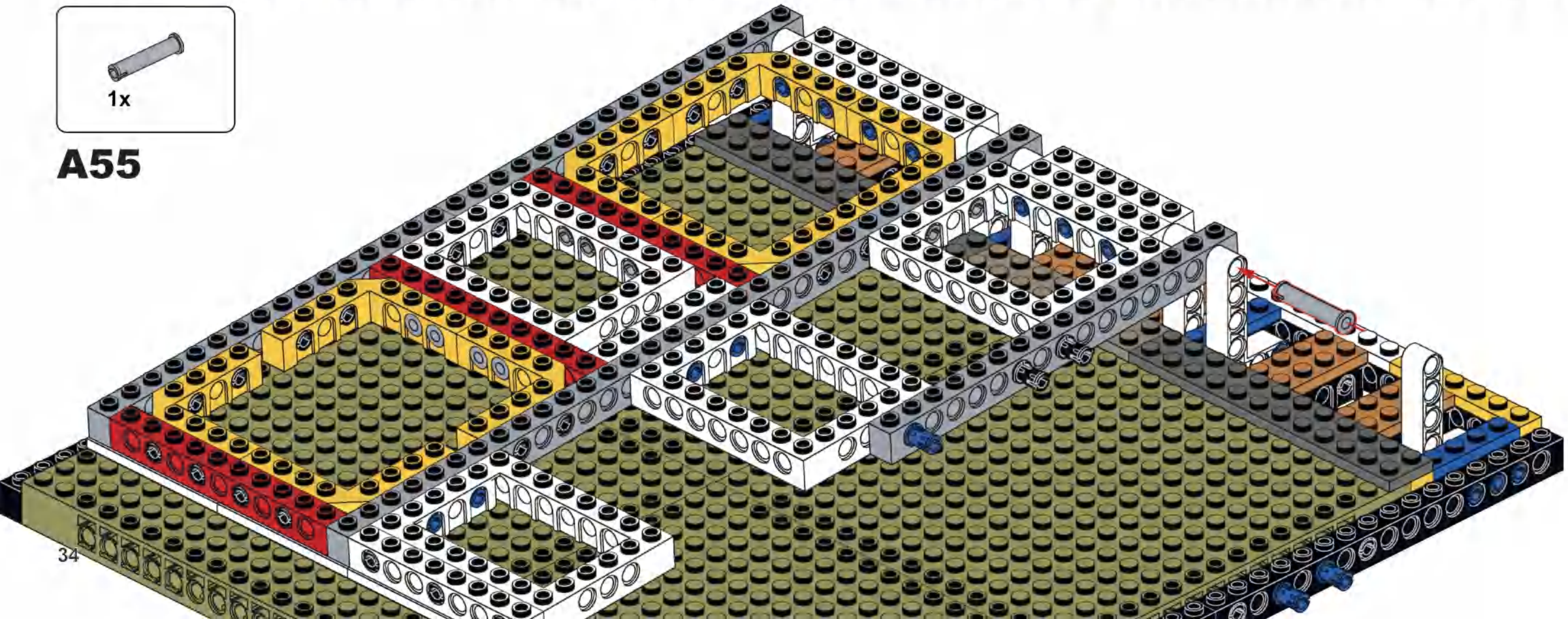

A56

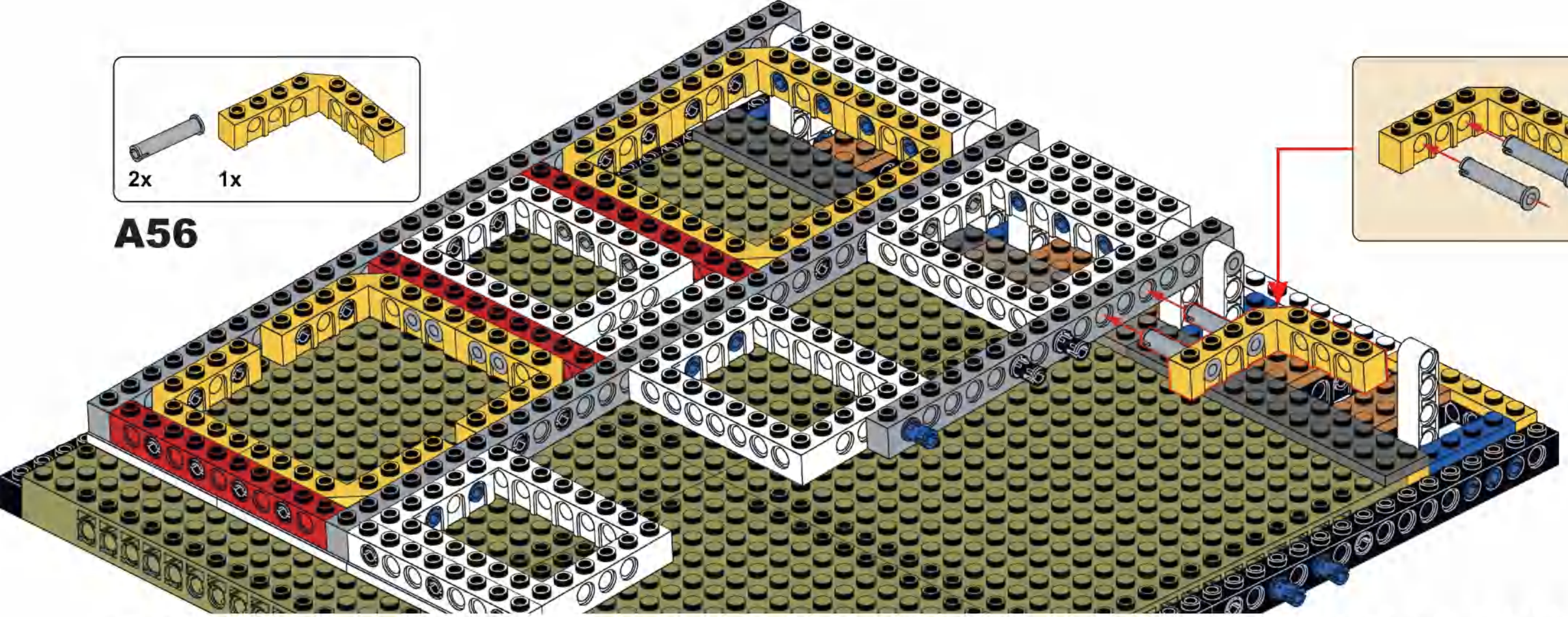

A57

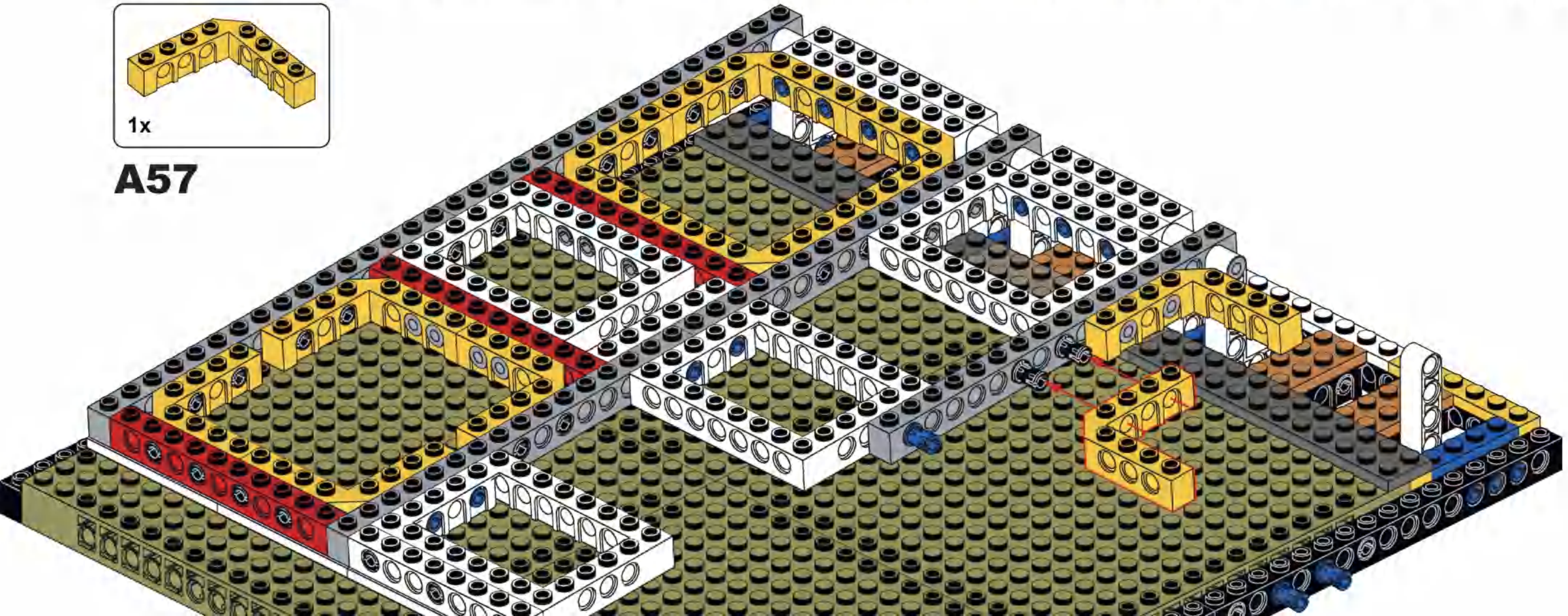

A58

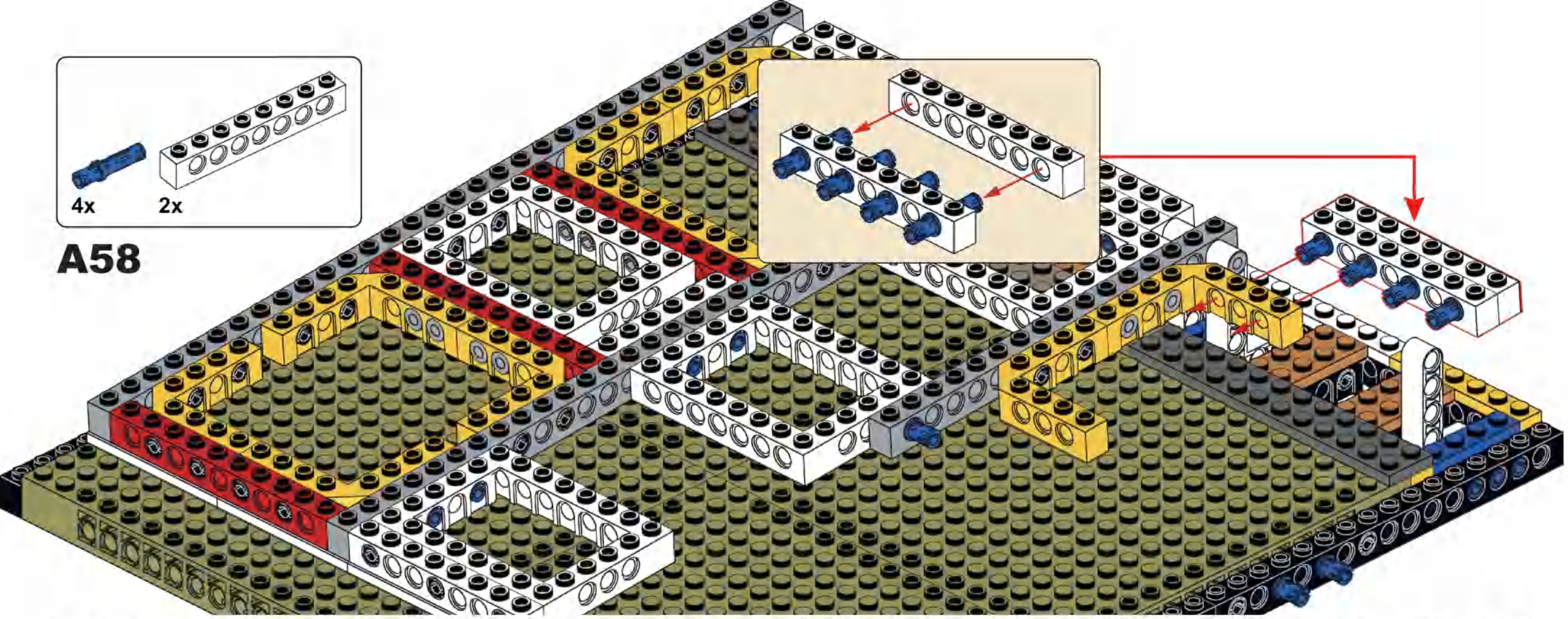

A59

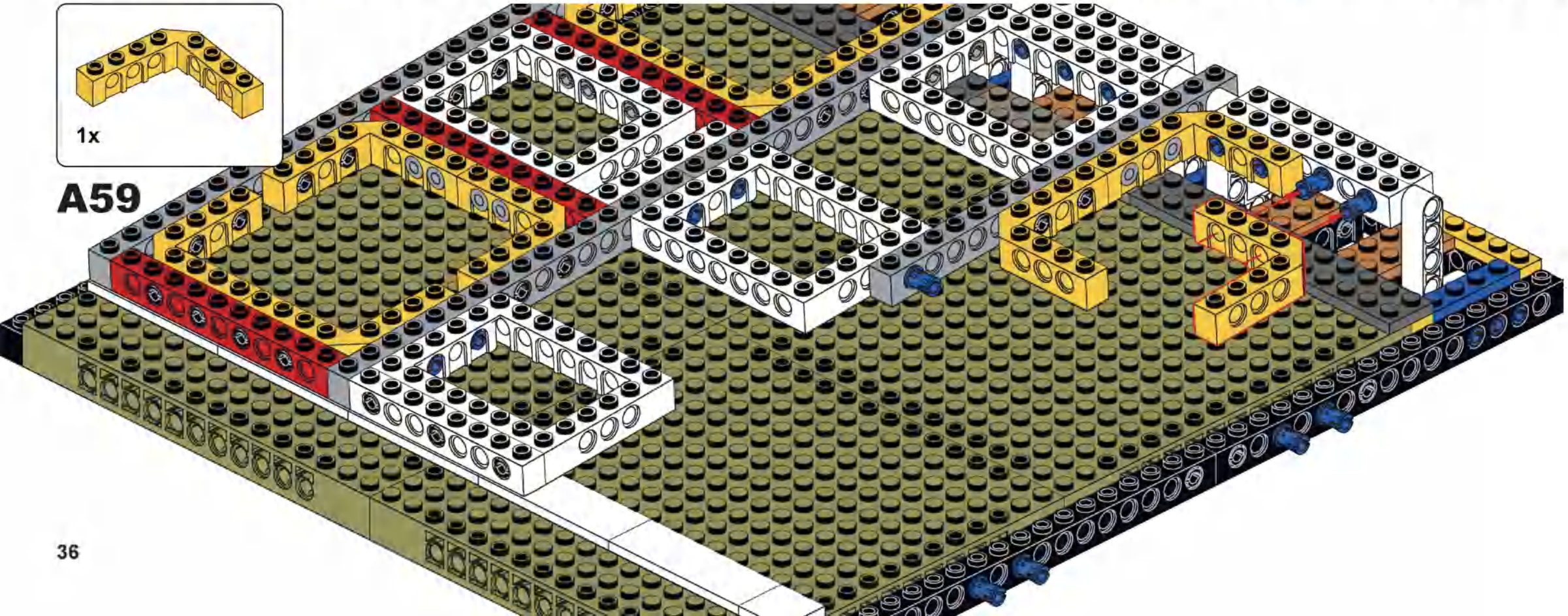

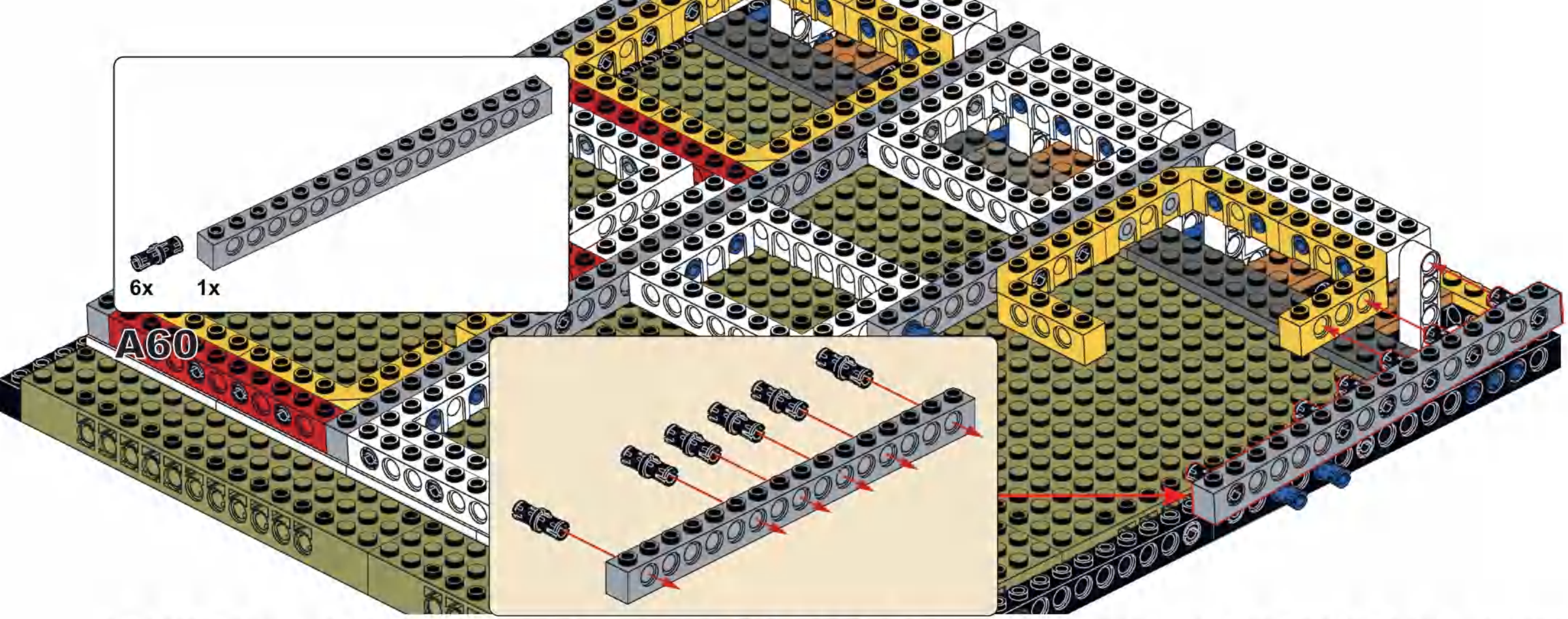
6x
1x
A60

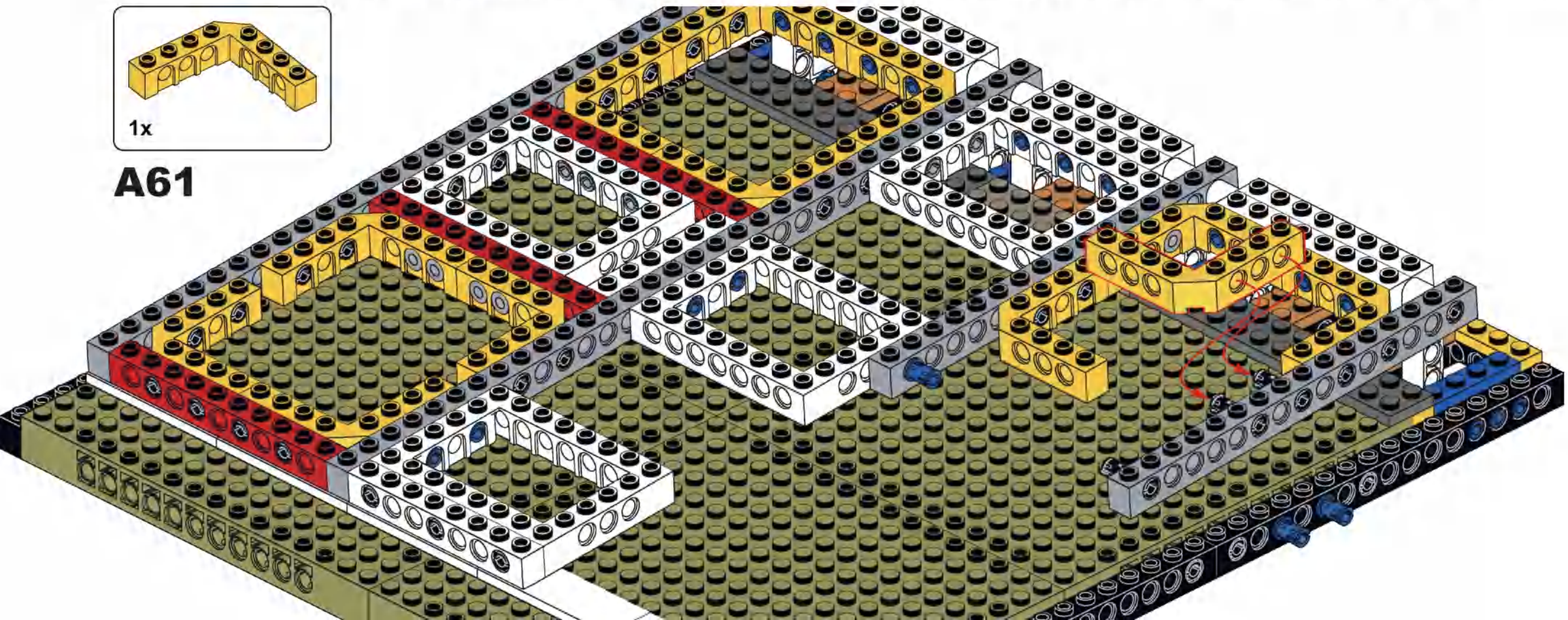
1x
A61

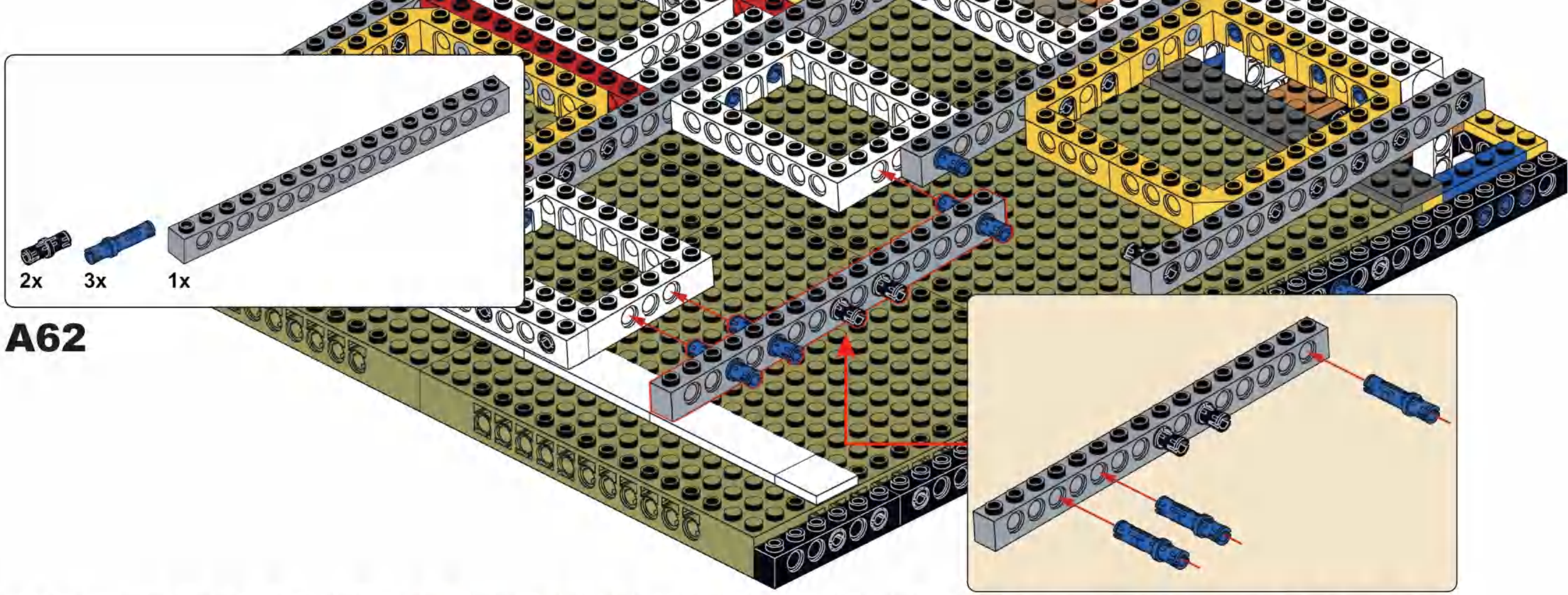

A62

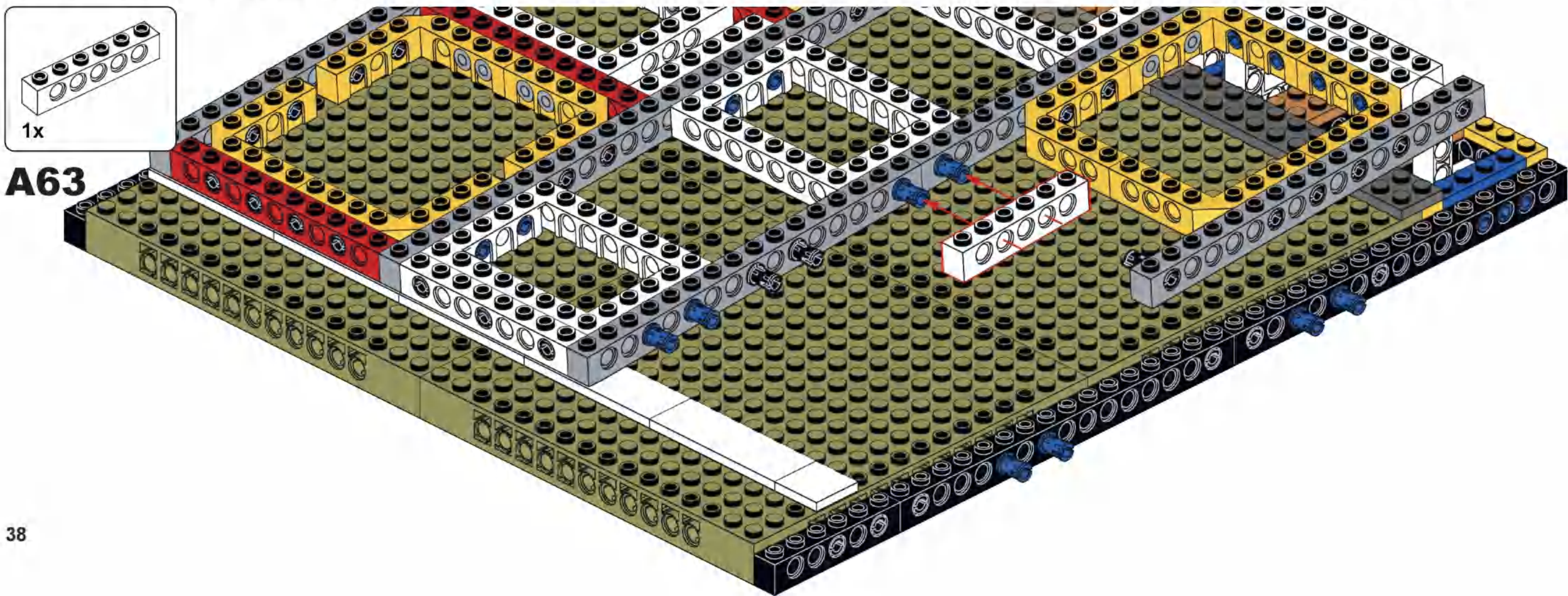

A63

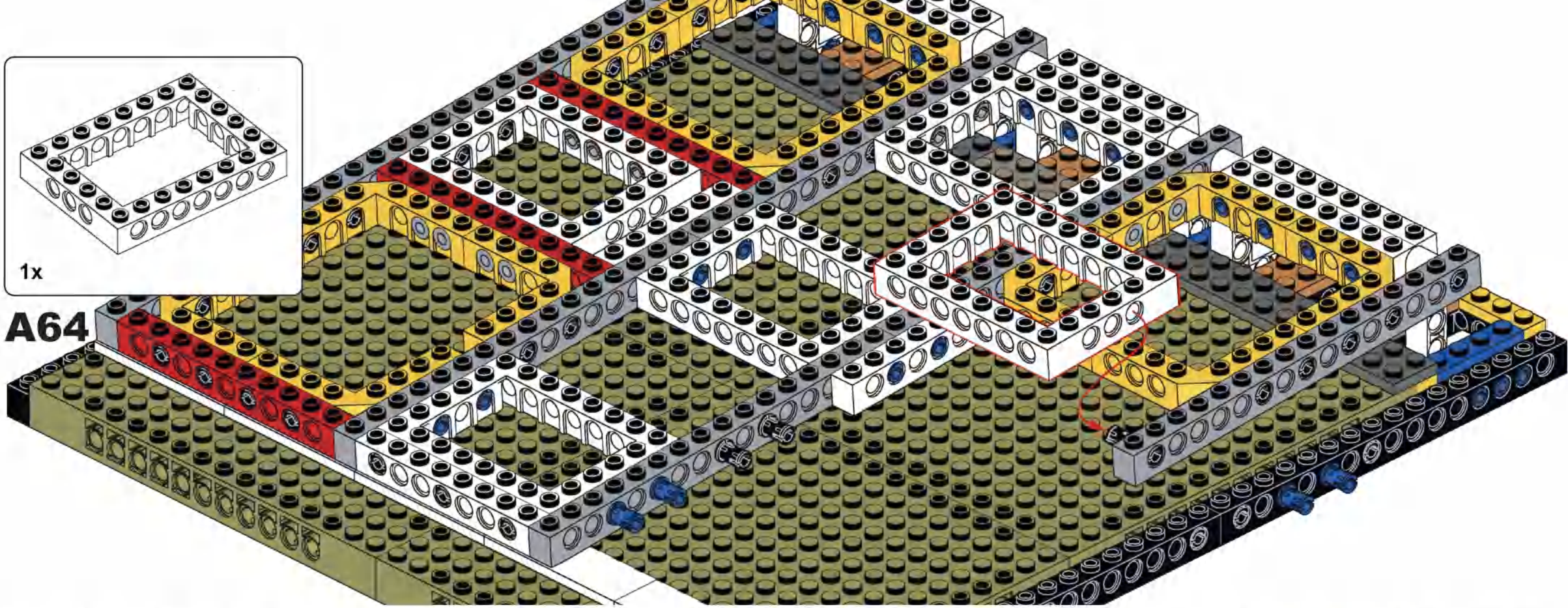

A64

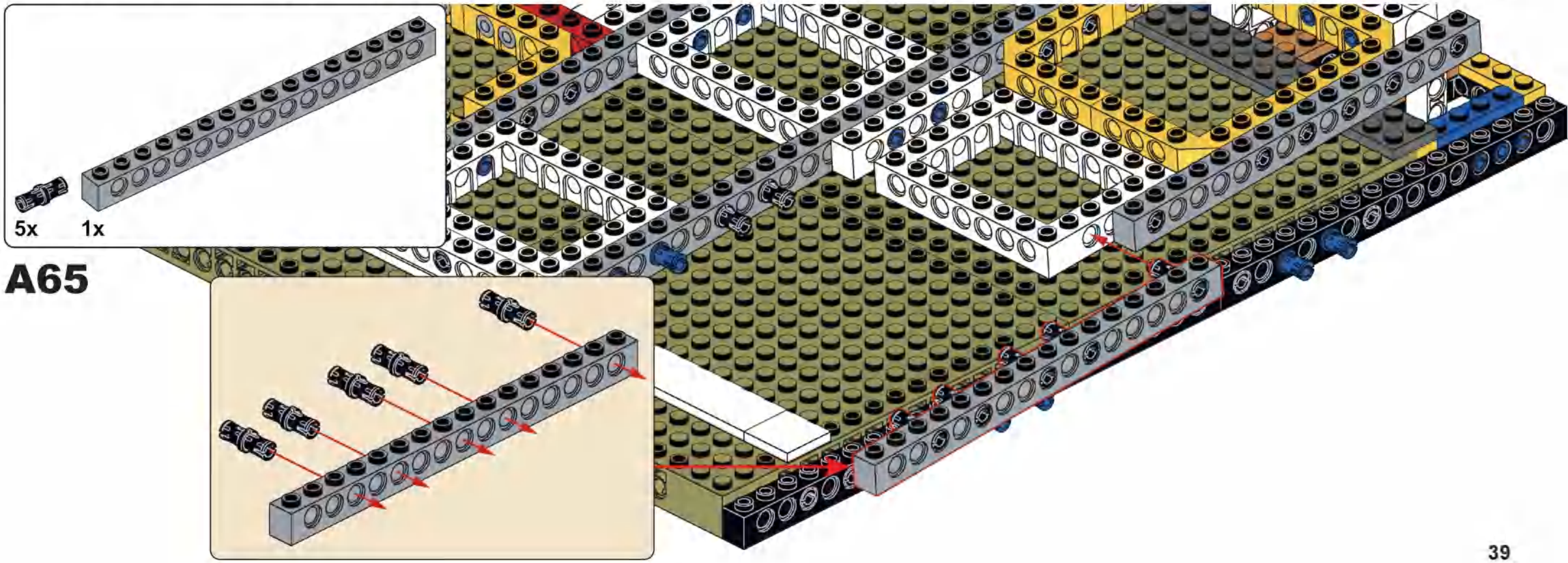

A65

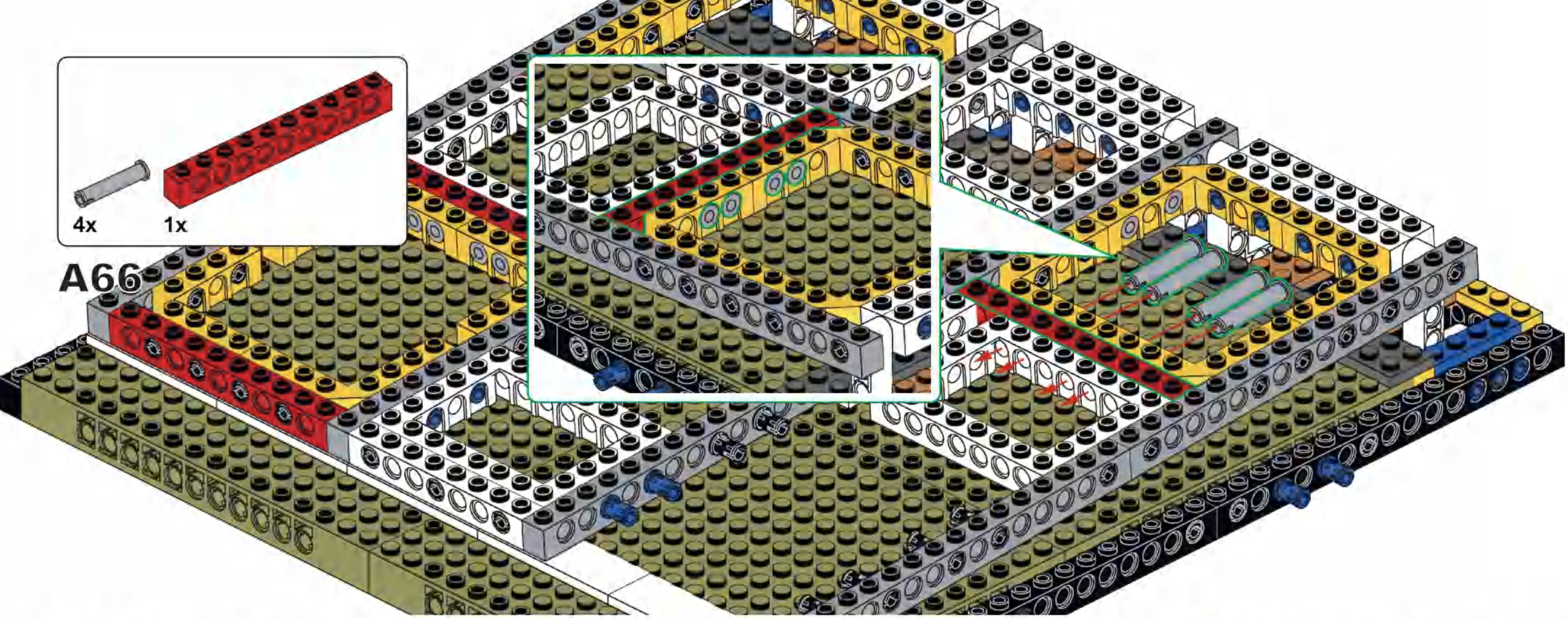
4x
1x
A66

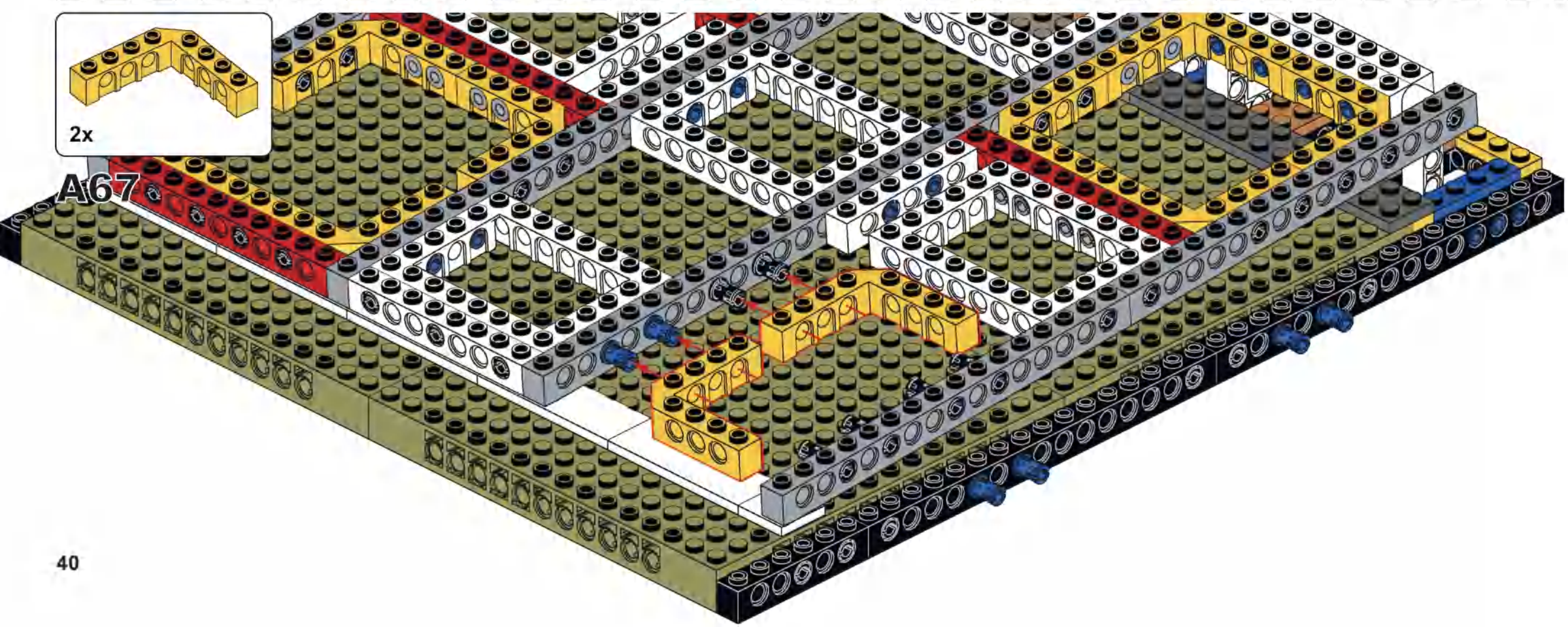
2x
A67

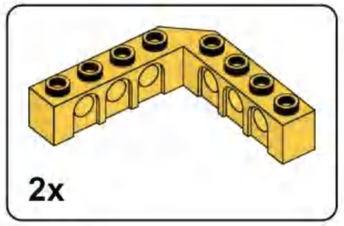

A68

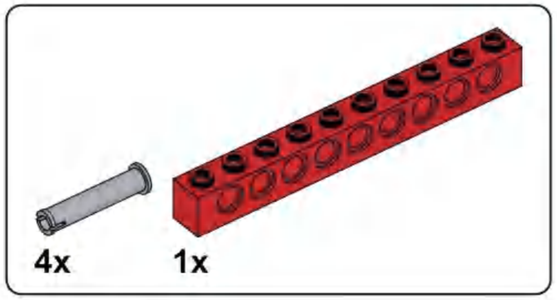

A69

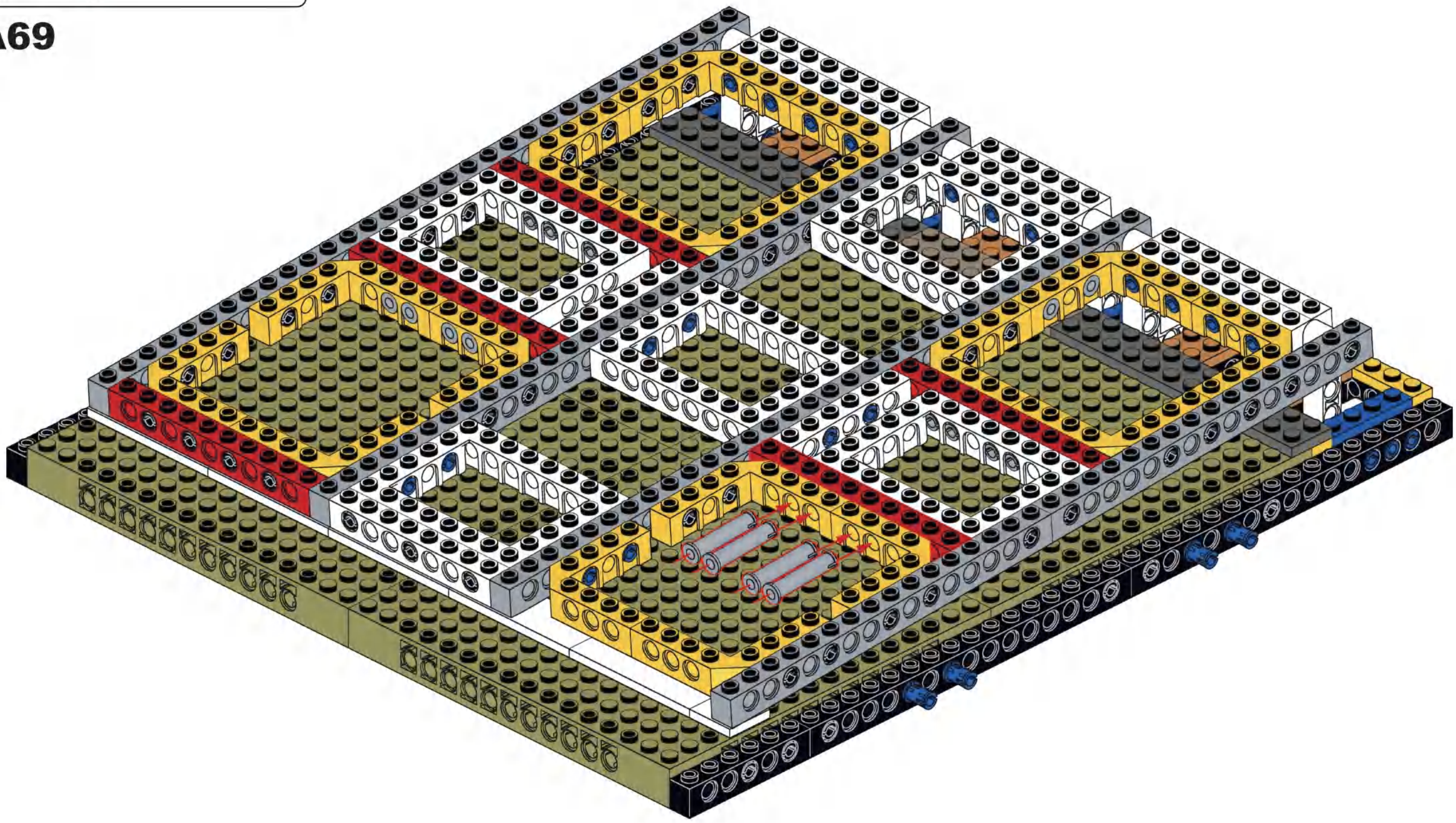

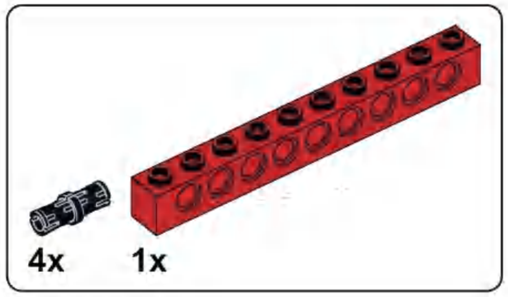

A70

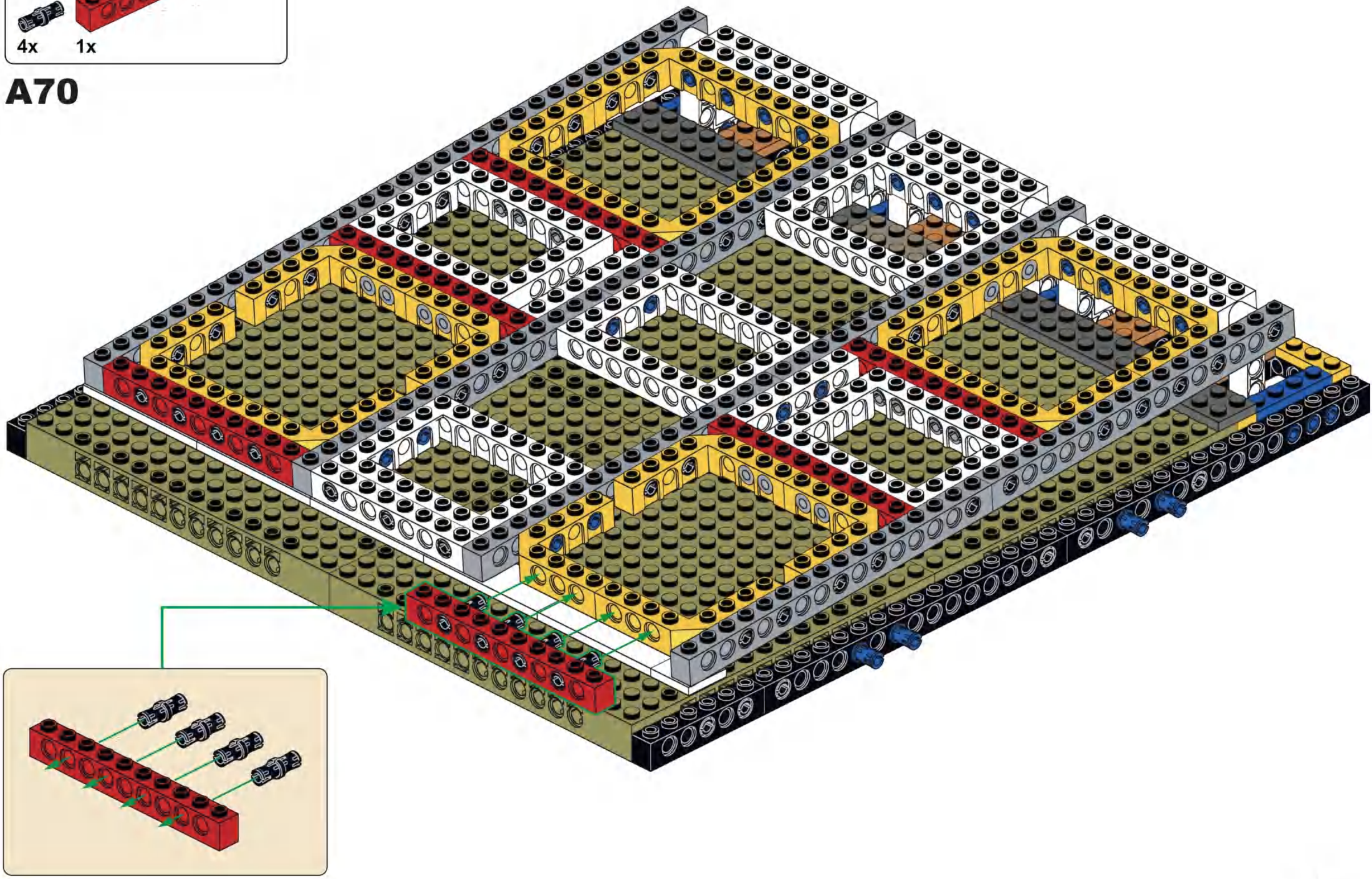

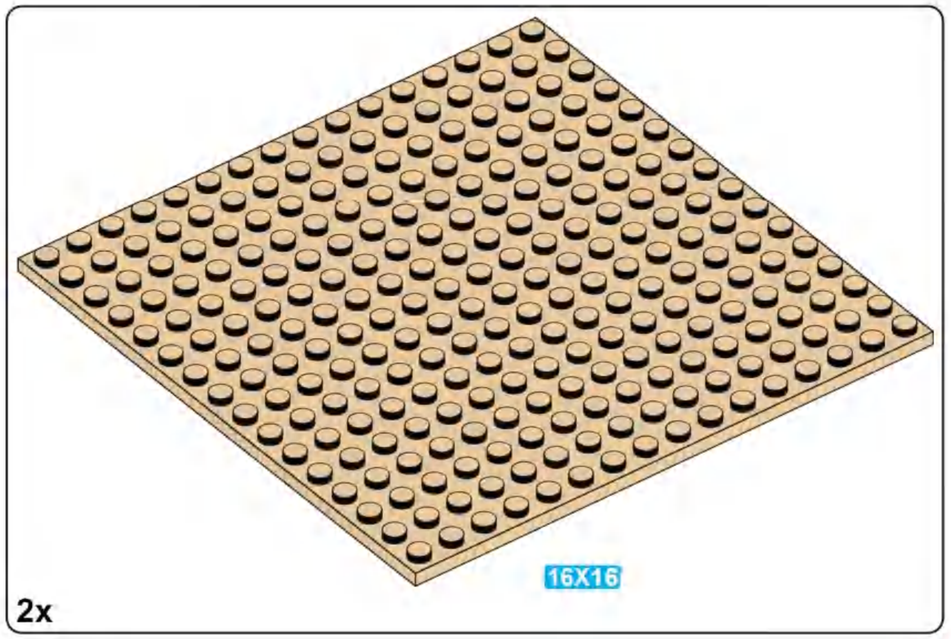

A71

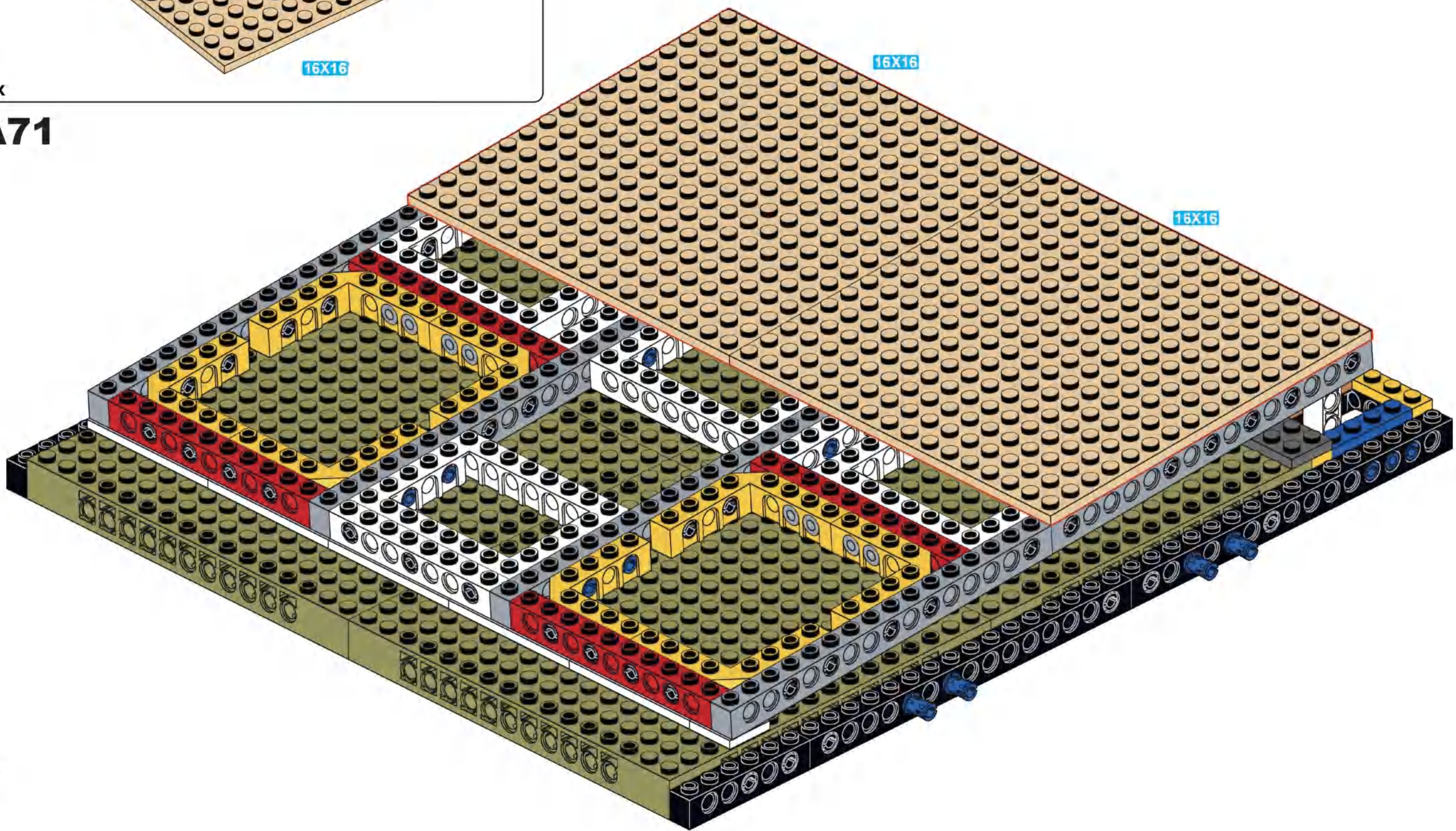

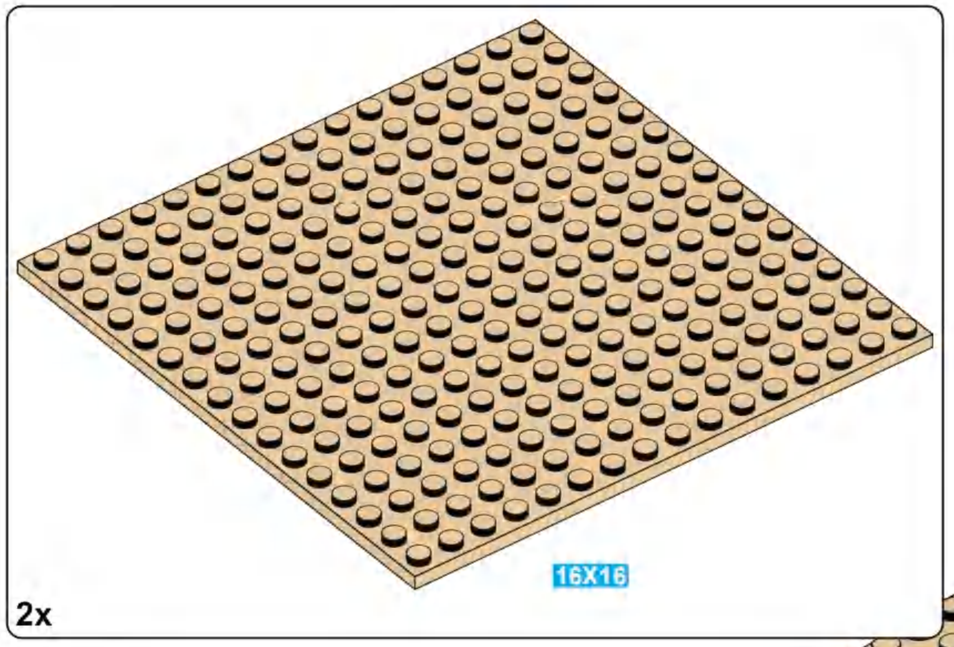

A72

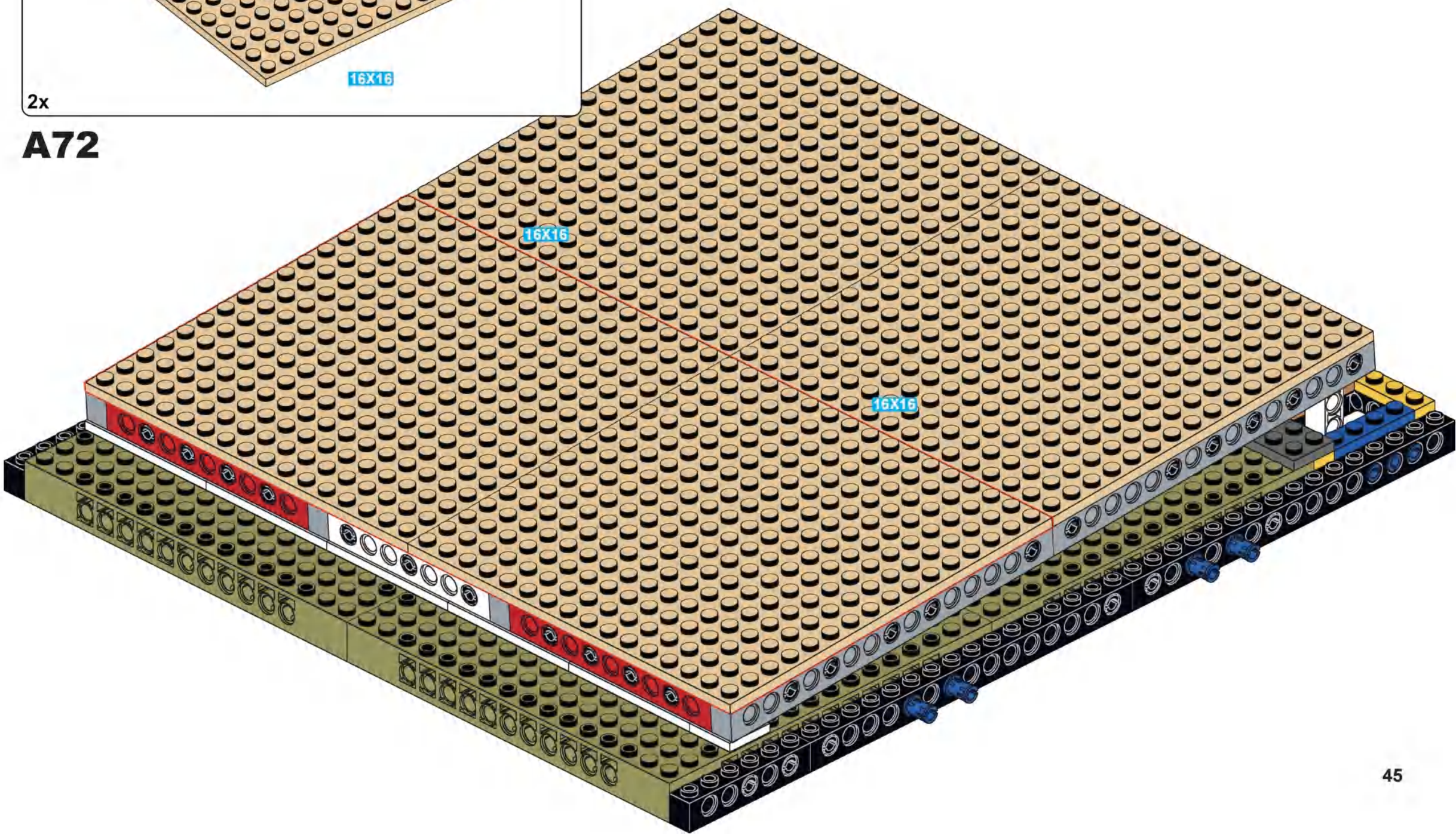

A73

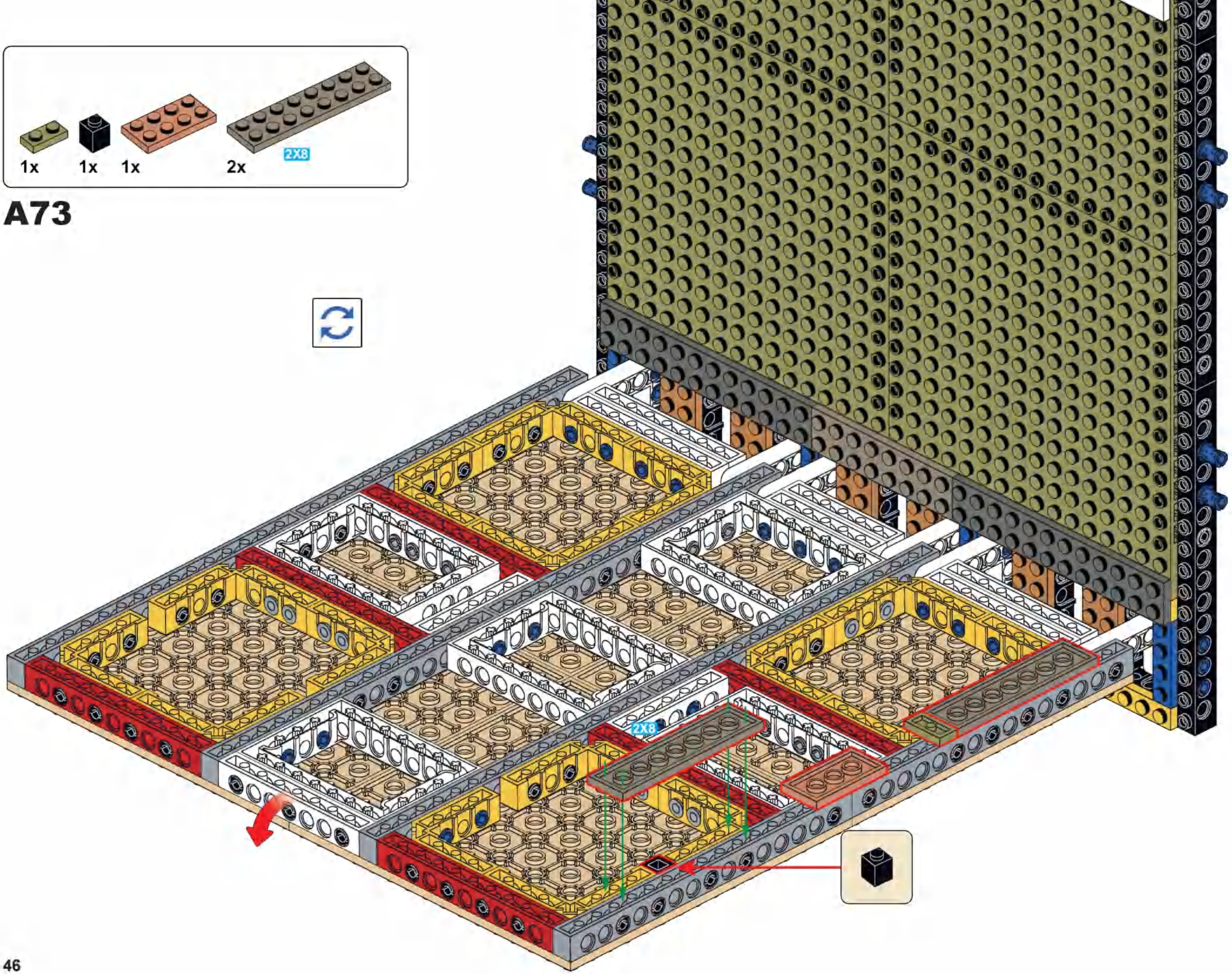

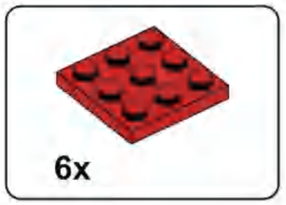

A74

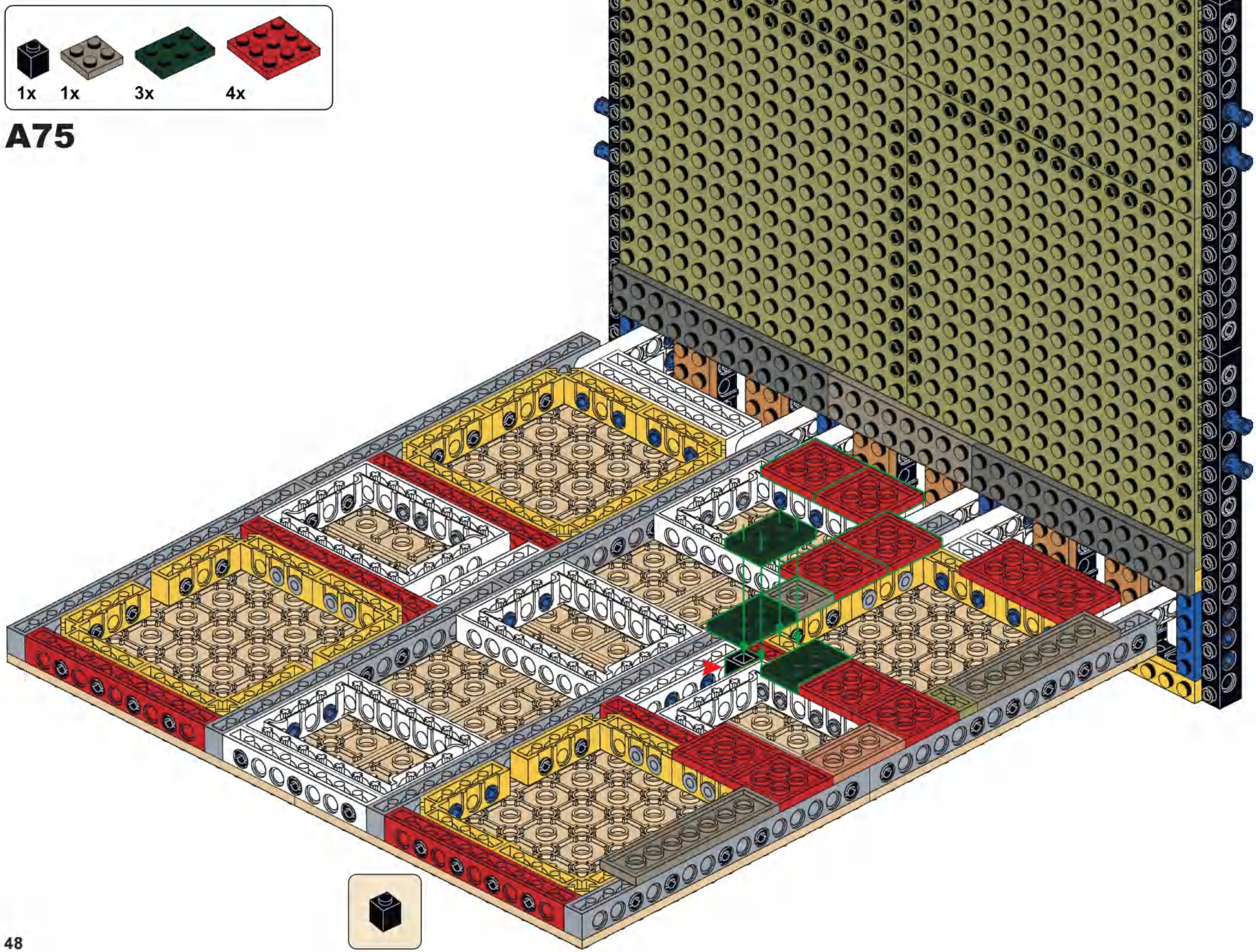

A75

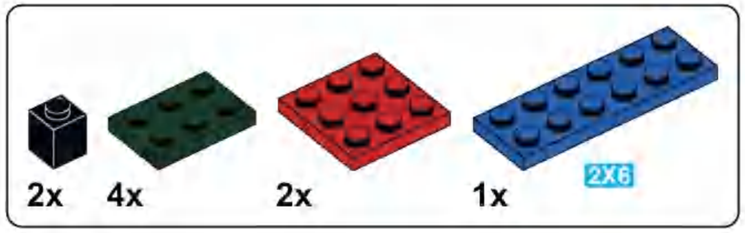

A76

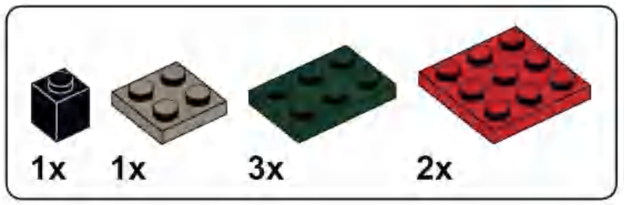

A77

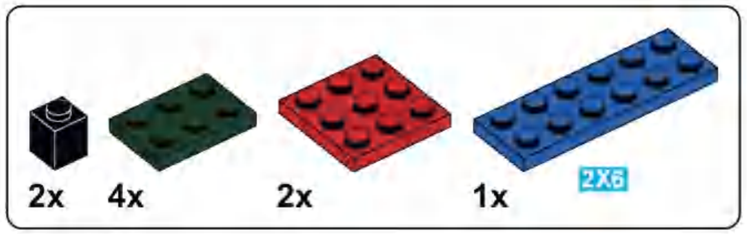

A78

A79

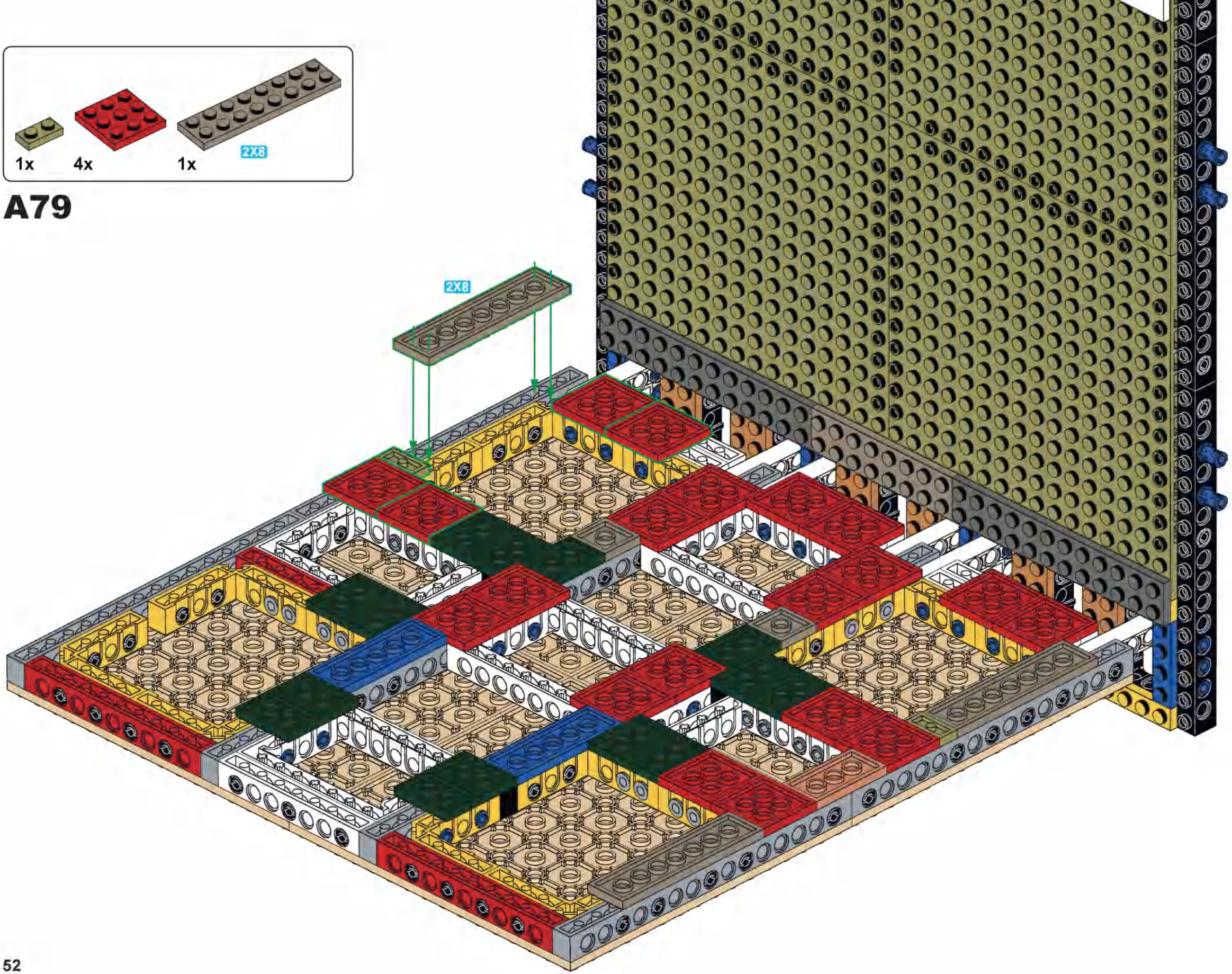

A80

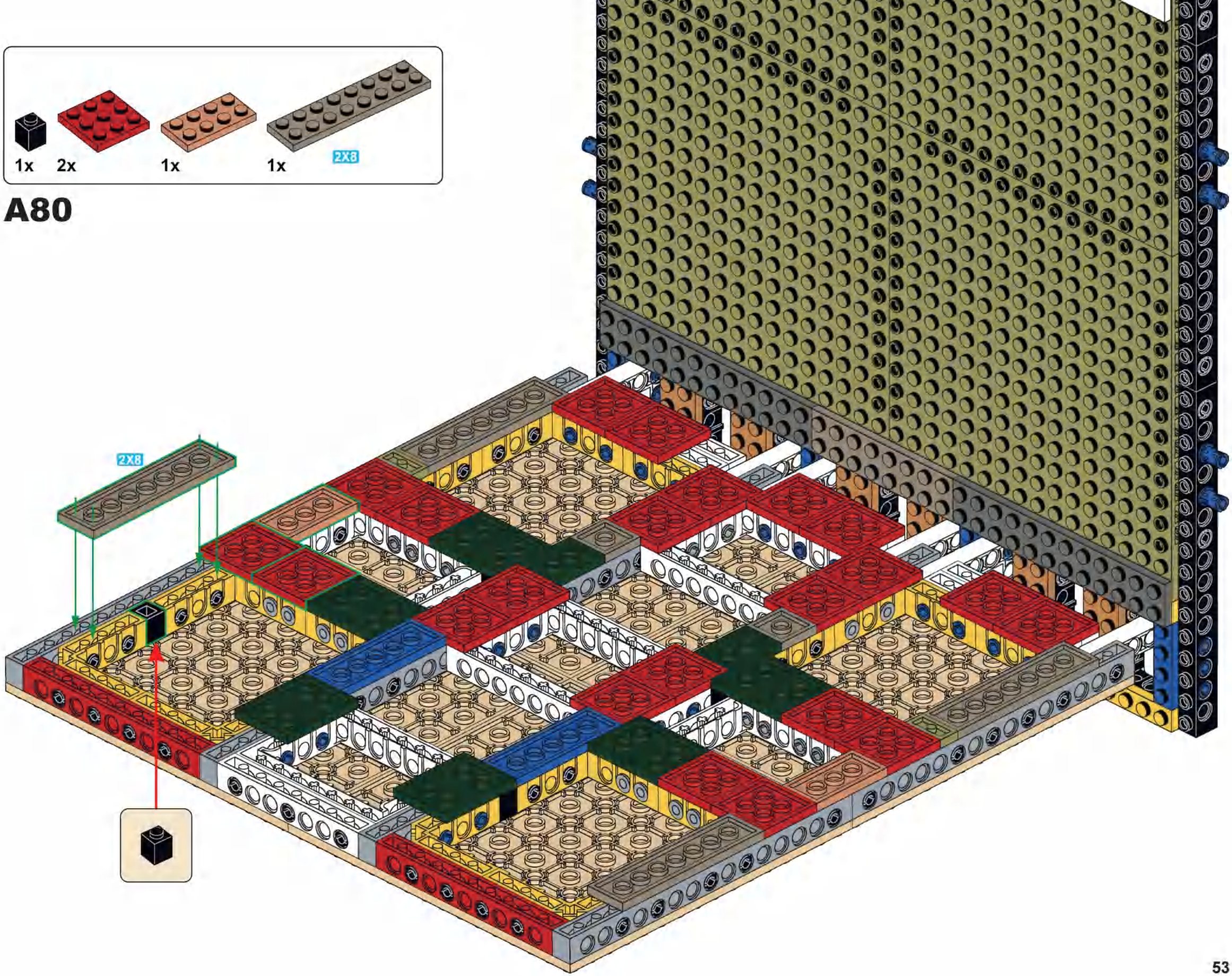

A81

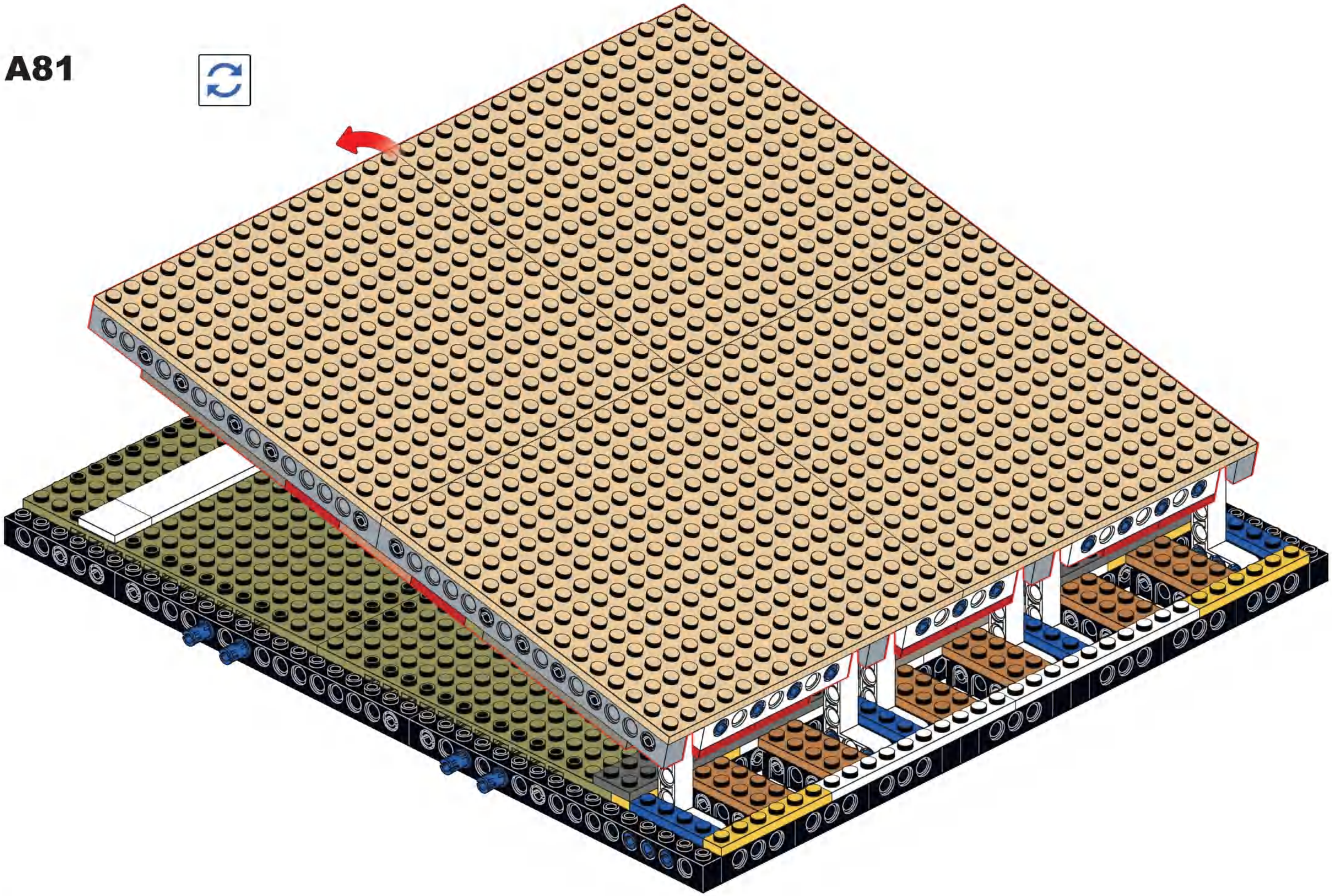

2

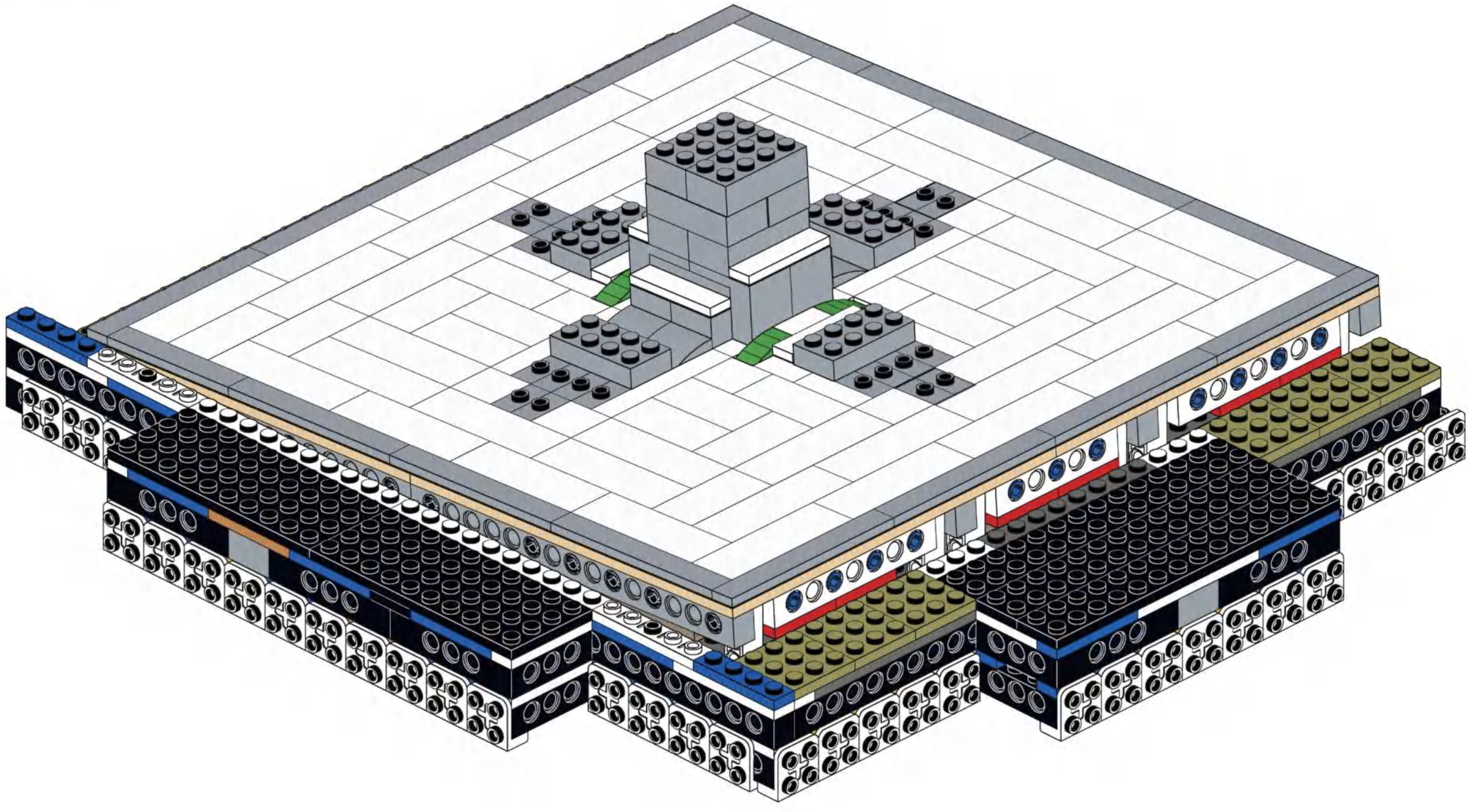

B

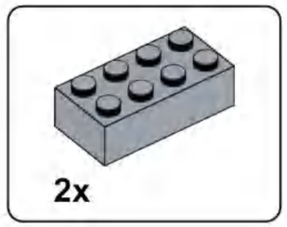

B1

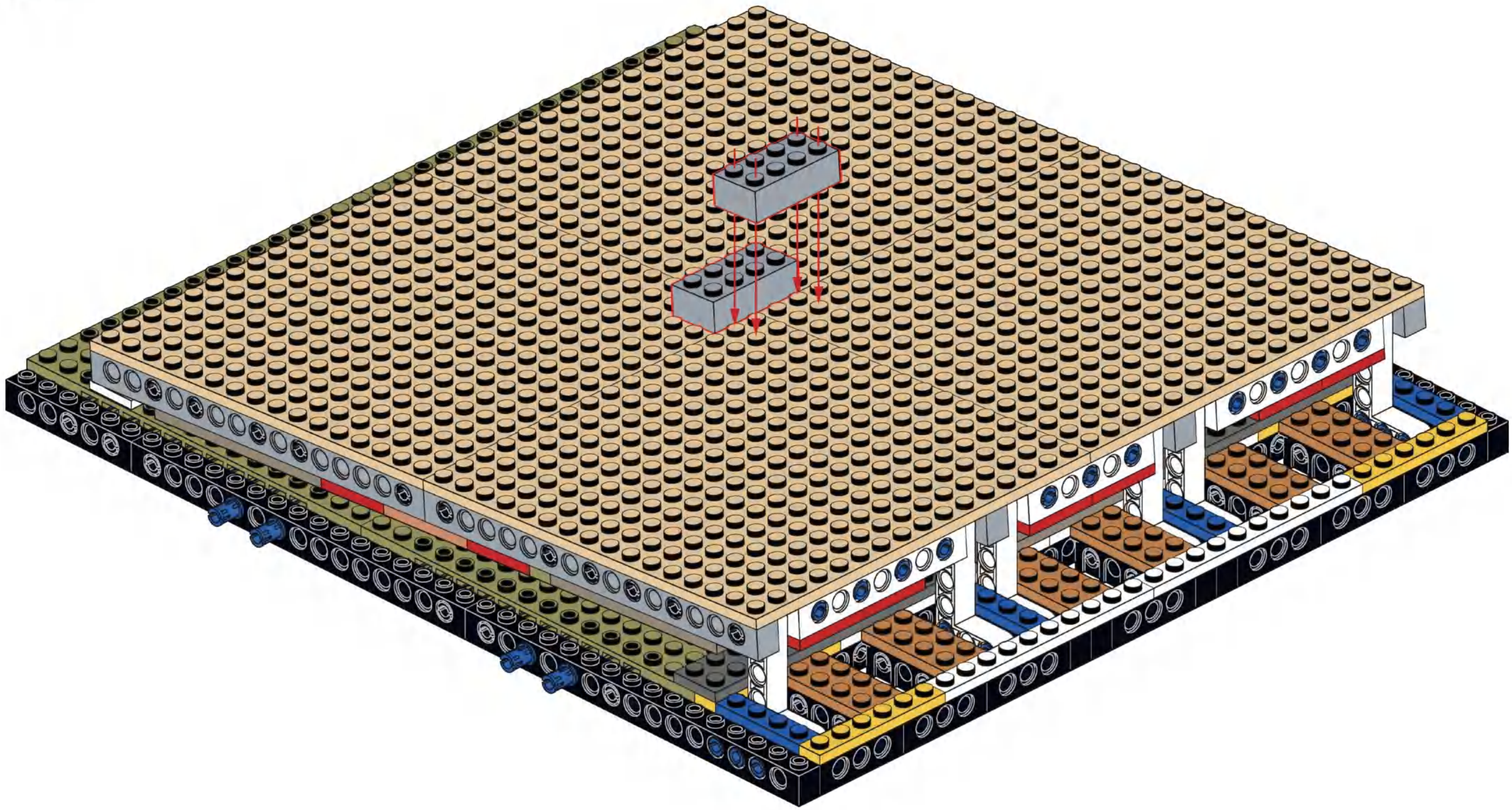

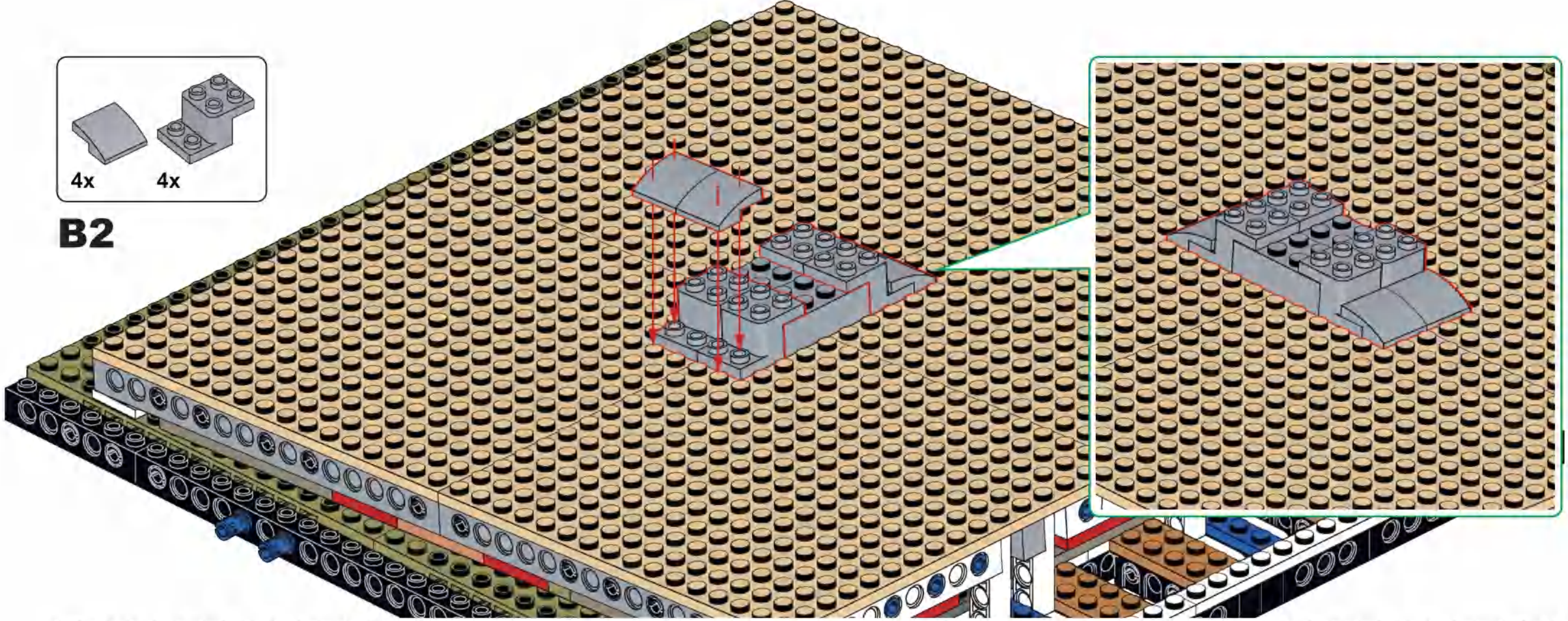
4x
4x
B2

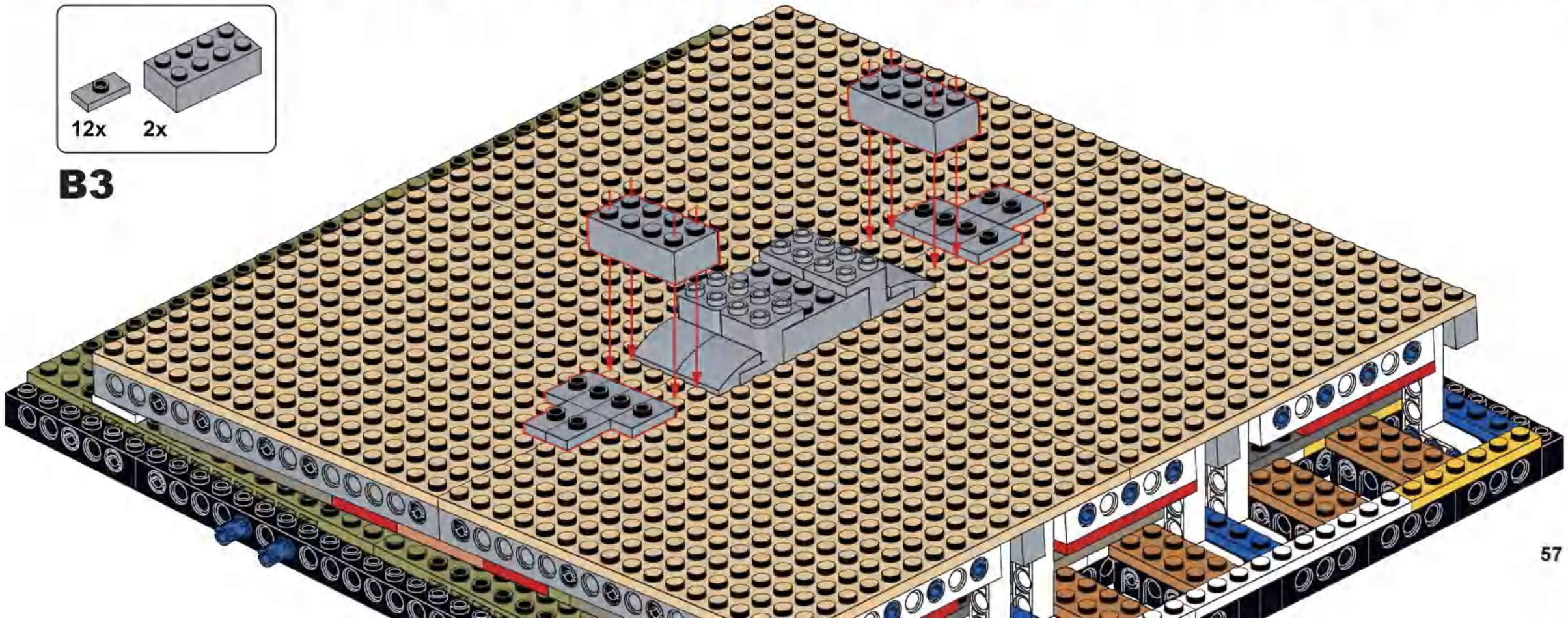
12x
2x
B3

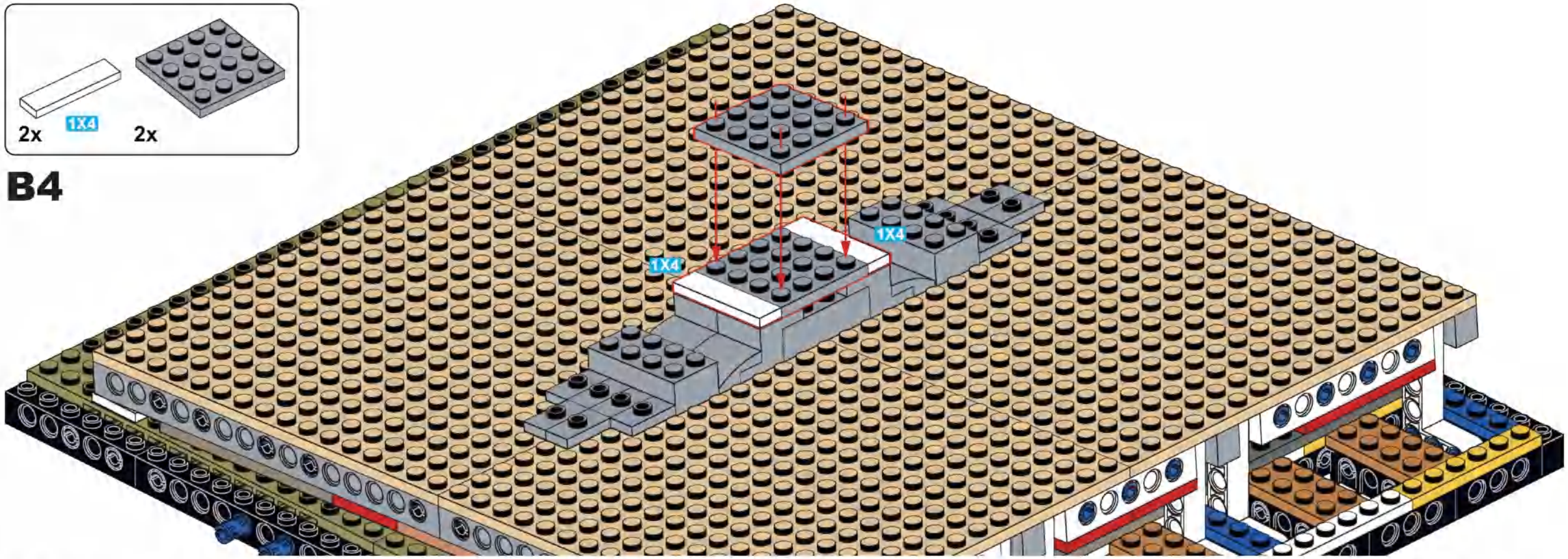
2x
1X4
2x
B4
1X4
1X4

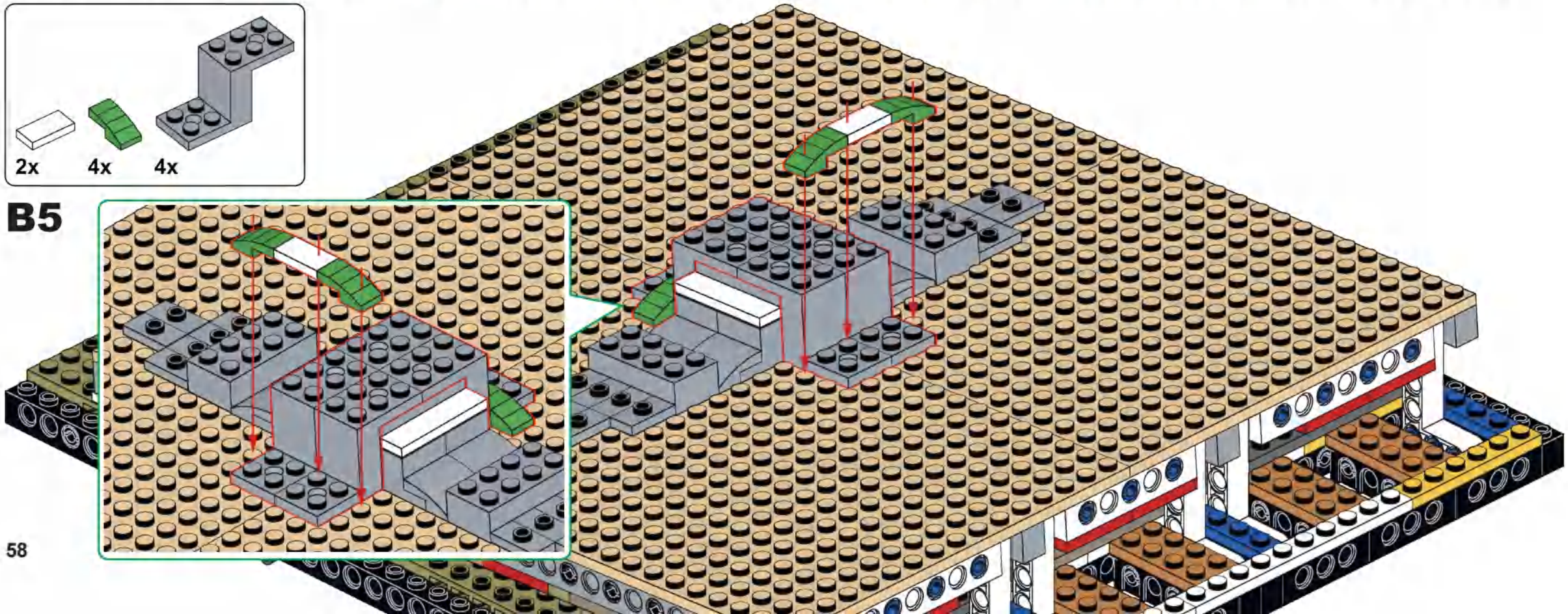
2x
4x
4x
B5

B6

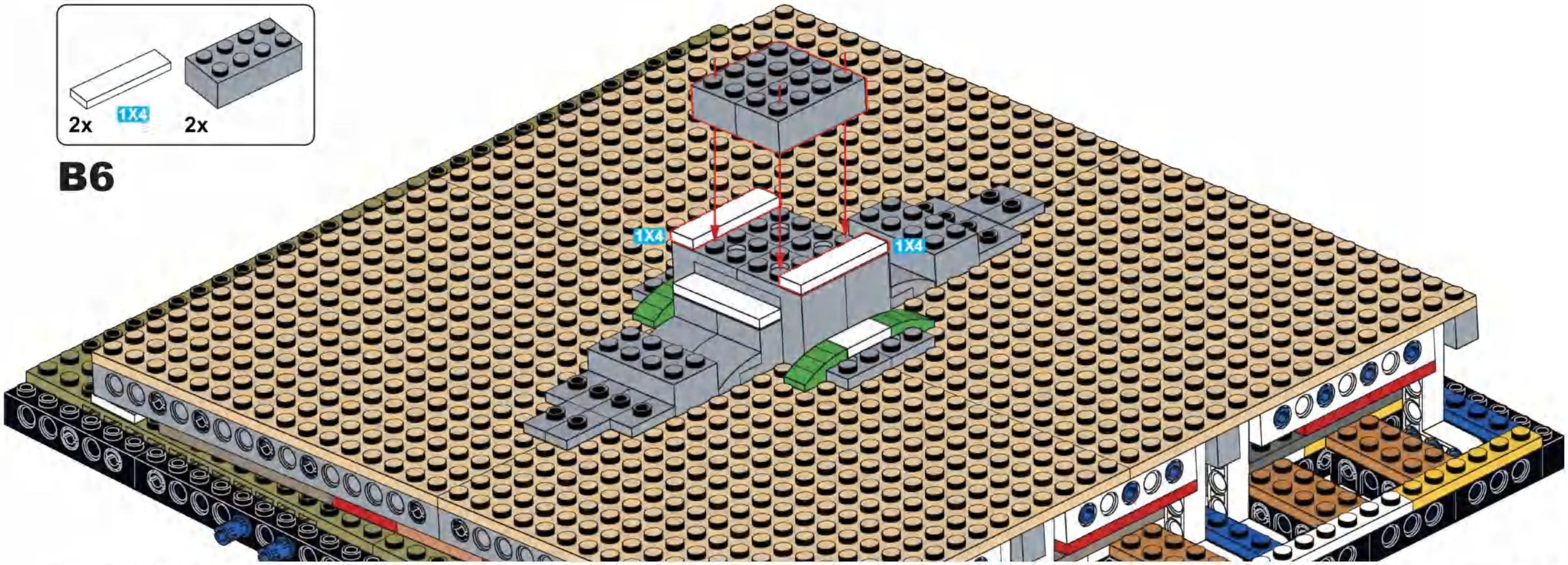

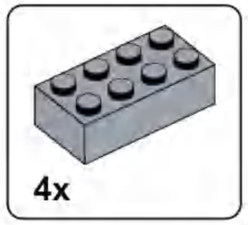

B7

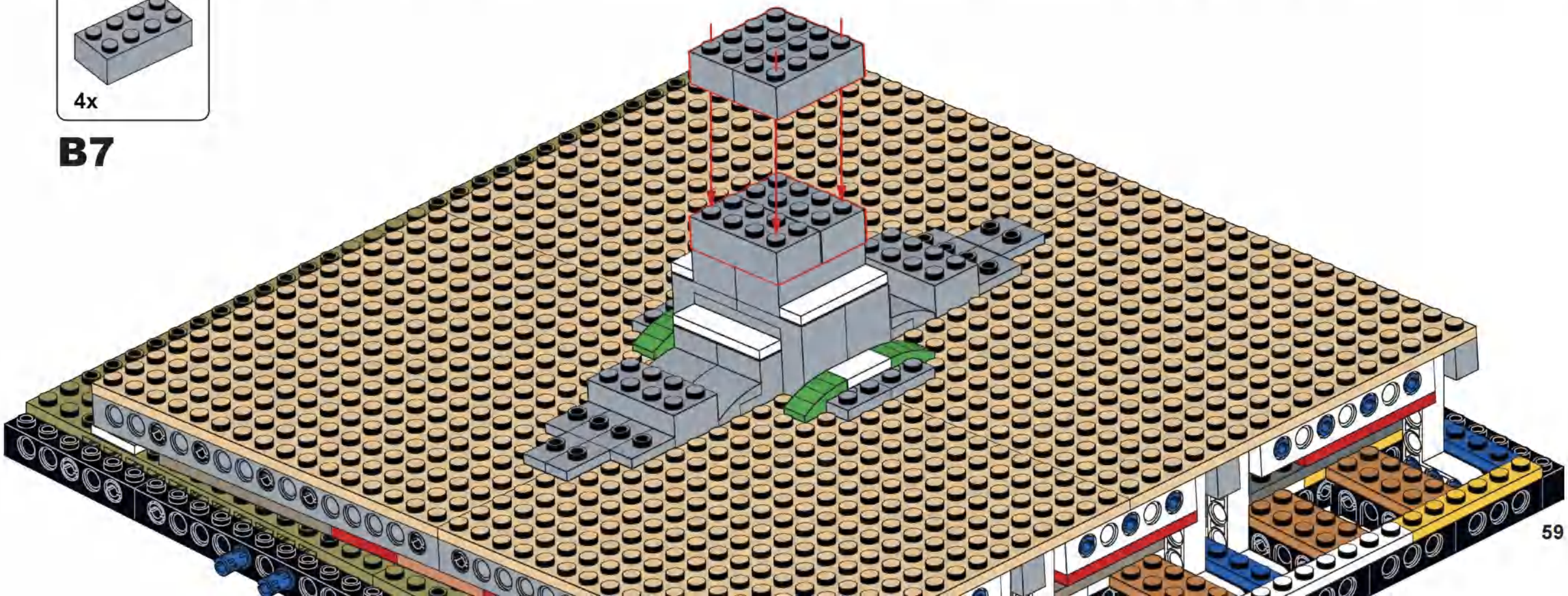

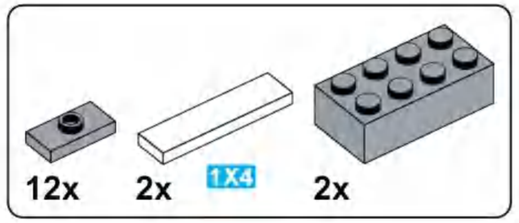

B8

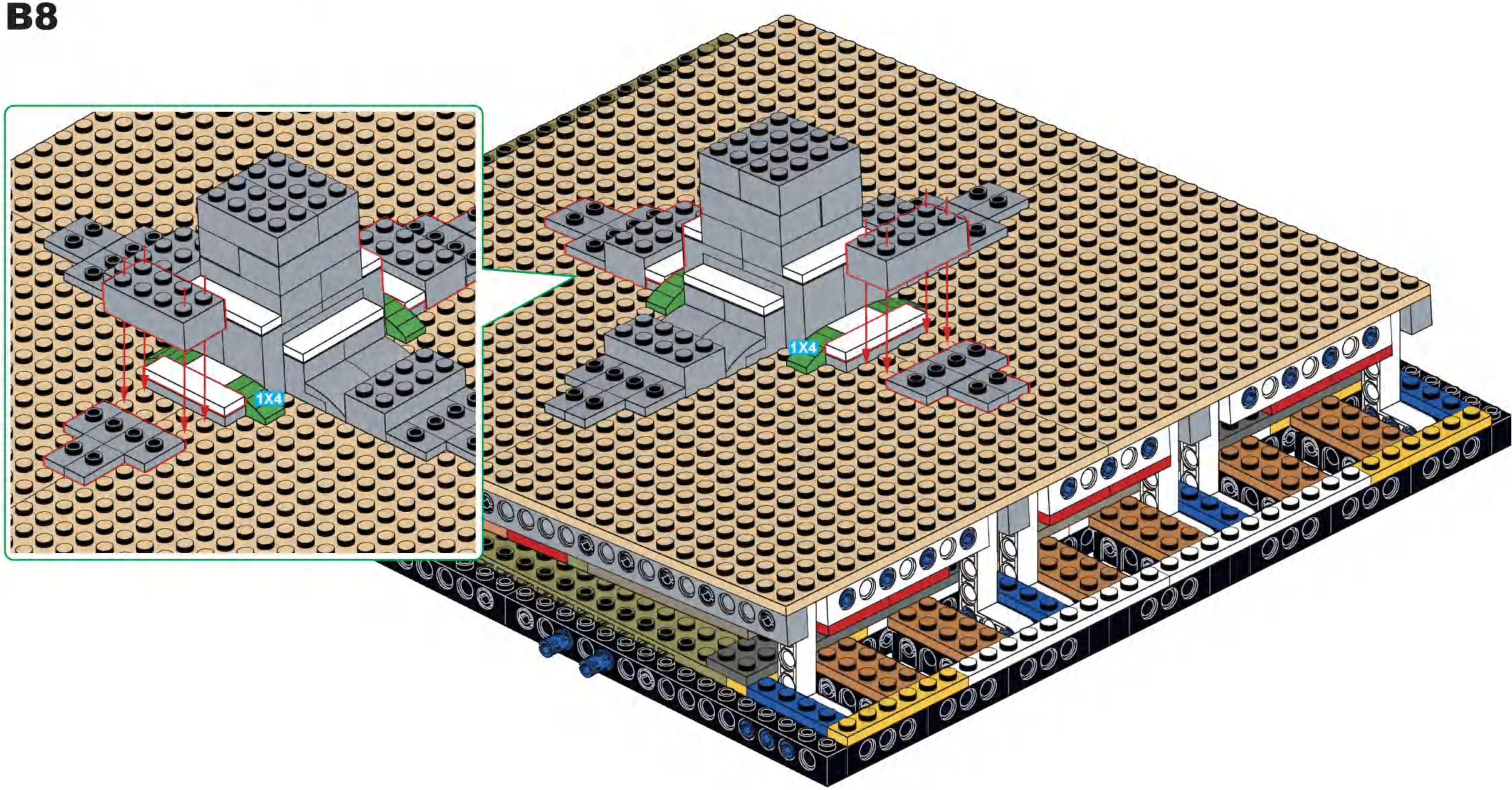

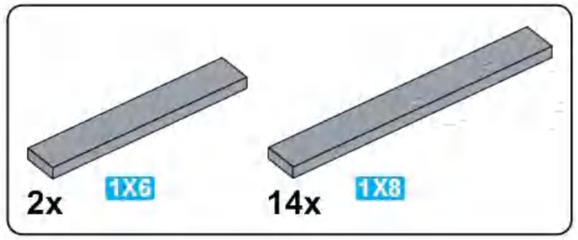

B9

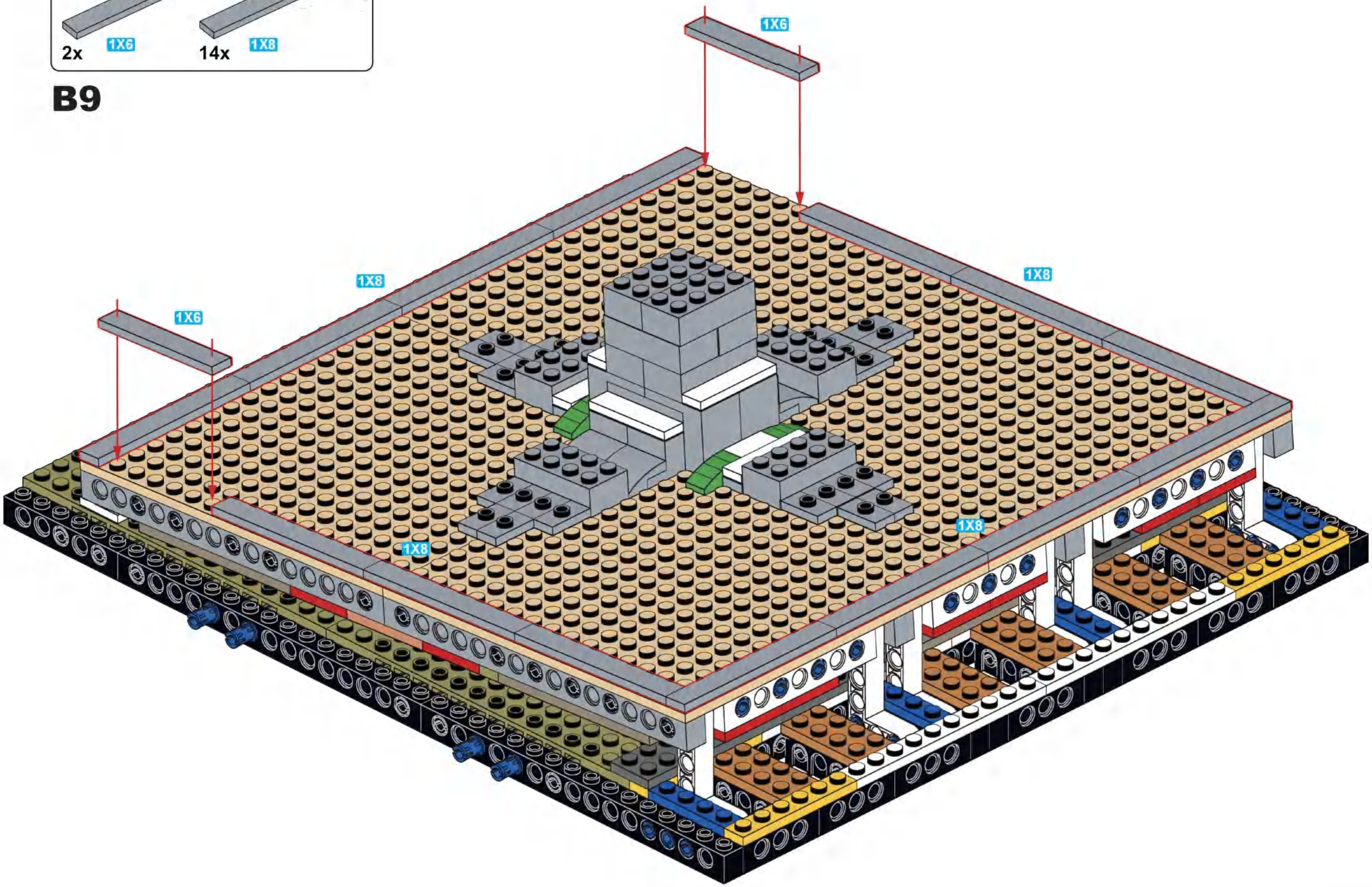

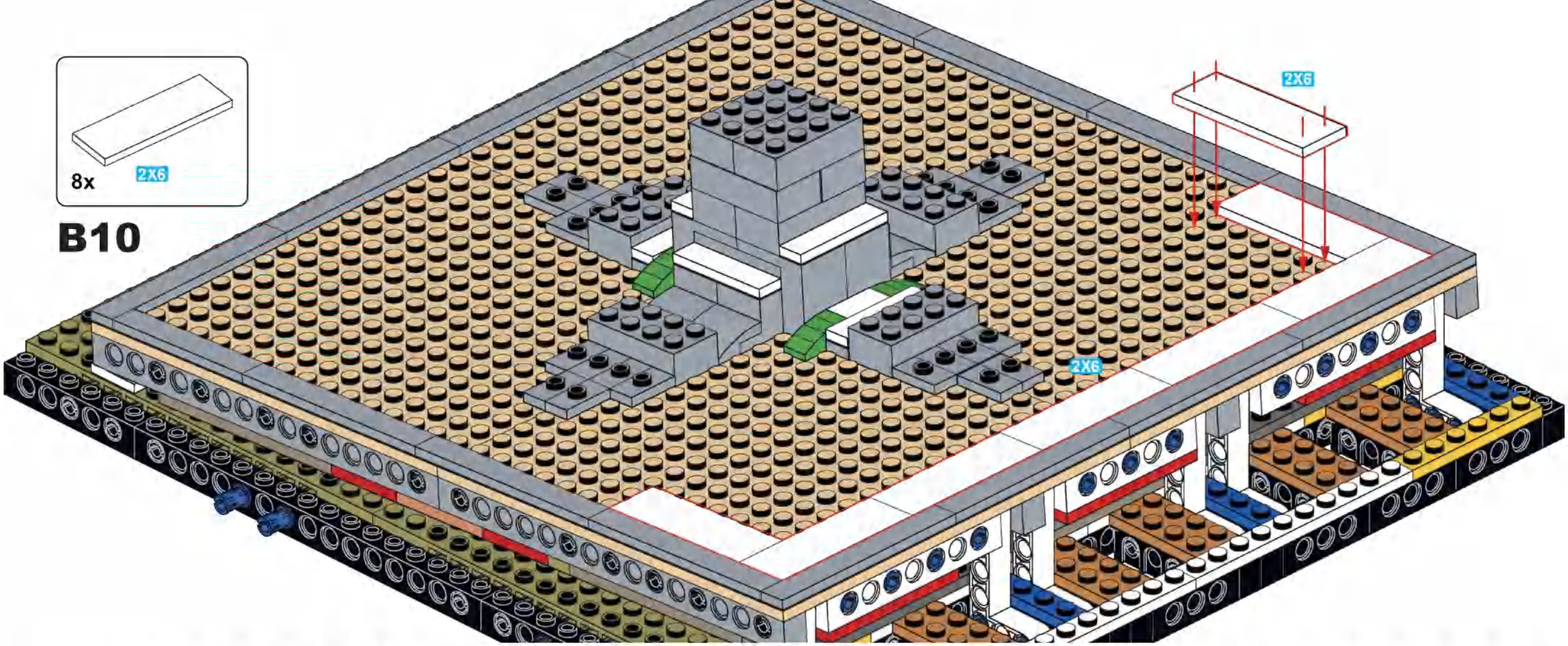
8x
2X6
B10
2X6
2X6

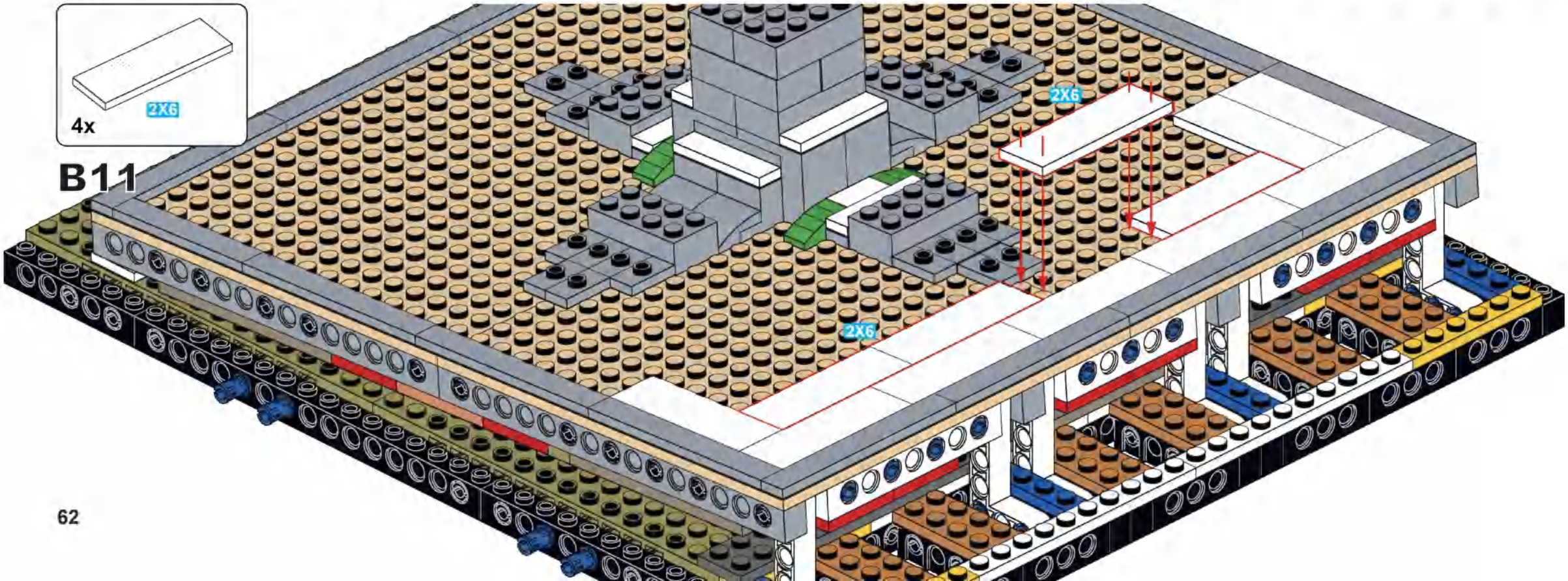
4x
2X6
B11
2X6
2X6

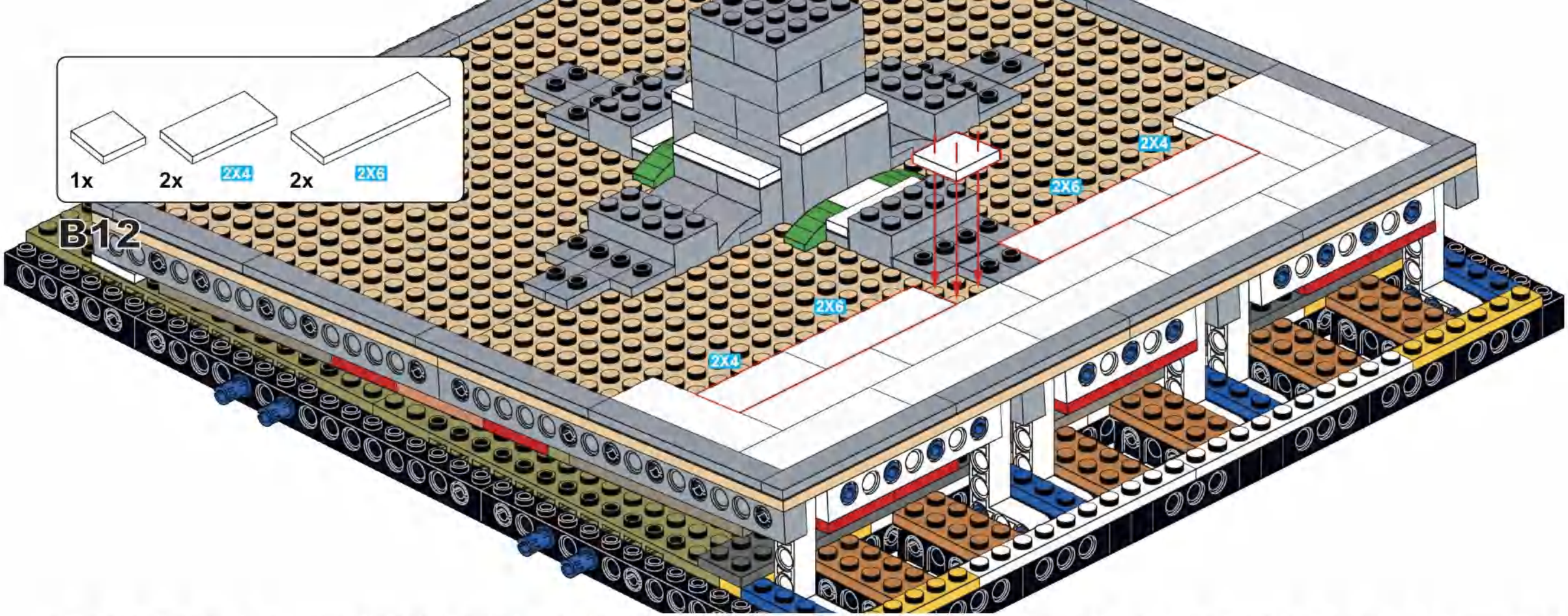
1x
2x
2X4
2x
2X6
B12
2X4
2X6
2X6
2X4

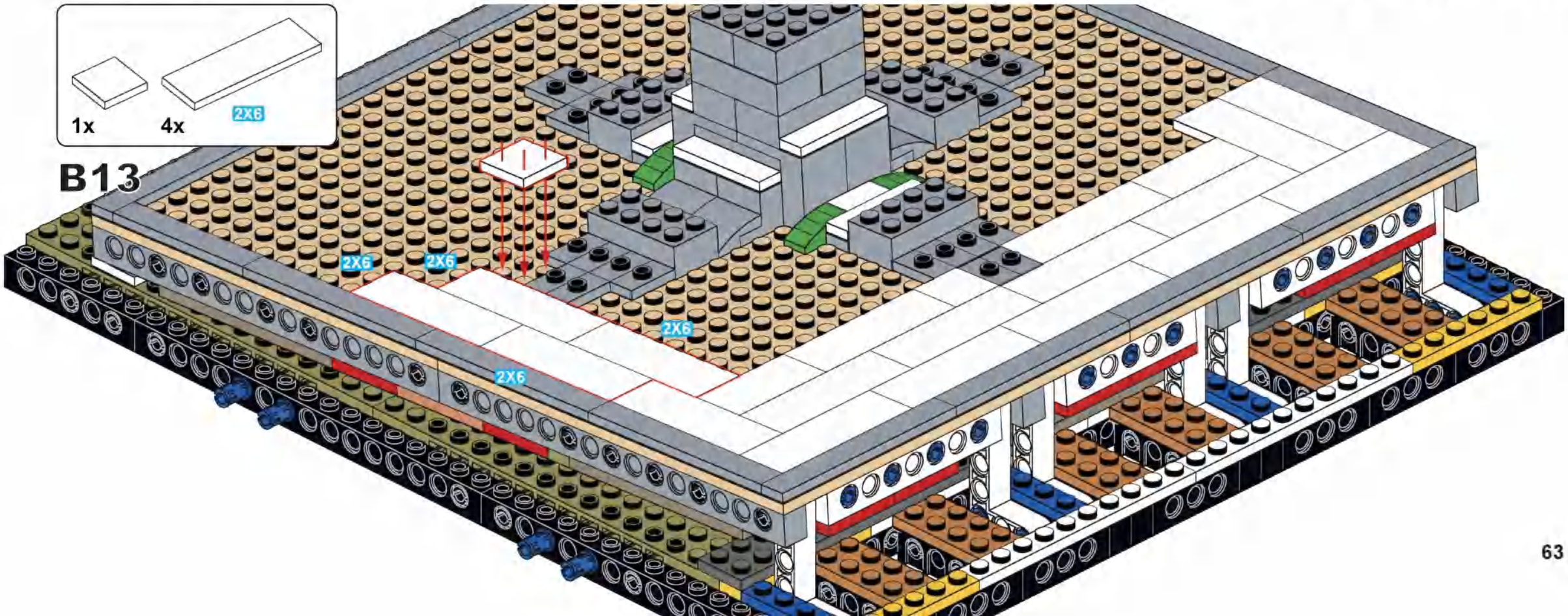
1x
4x
2X6
B13
2X6
2X6
2X6
2X6

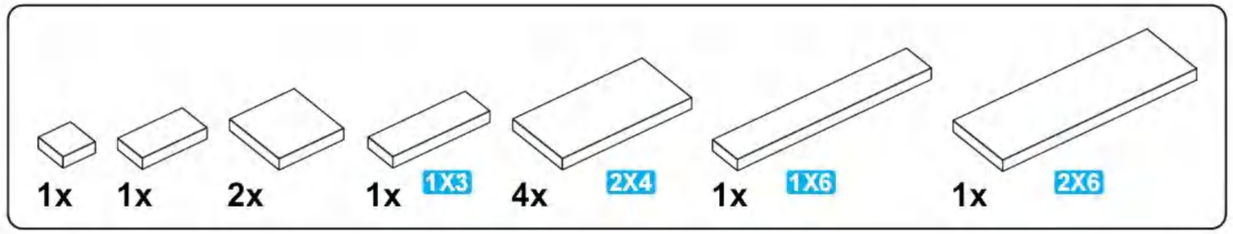

B14

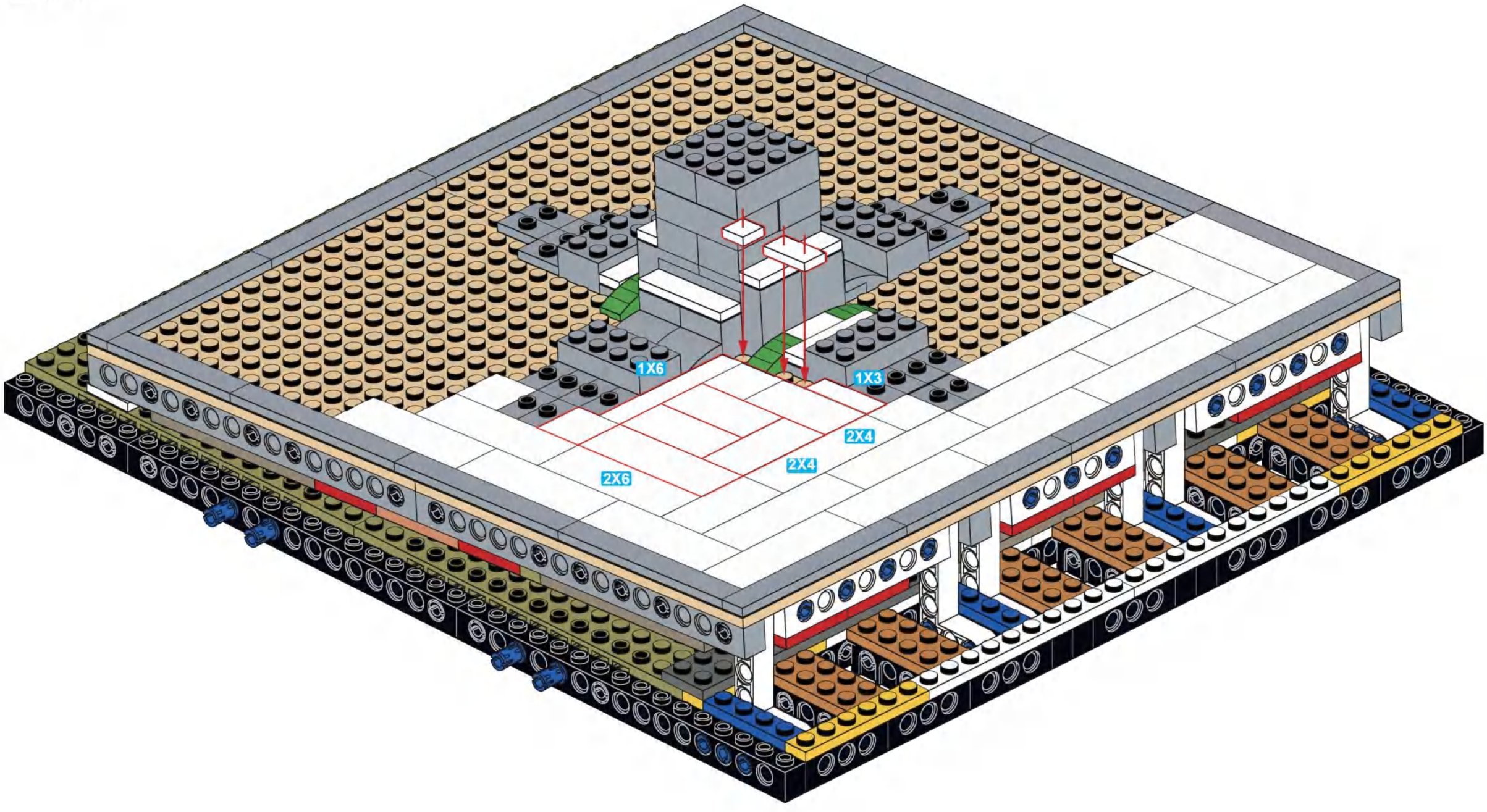

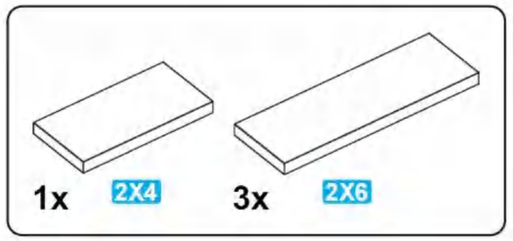

B15

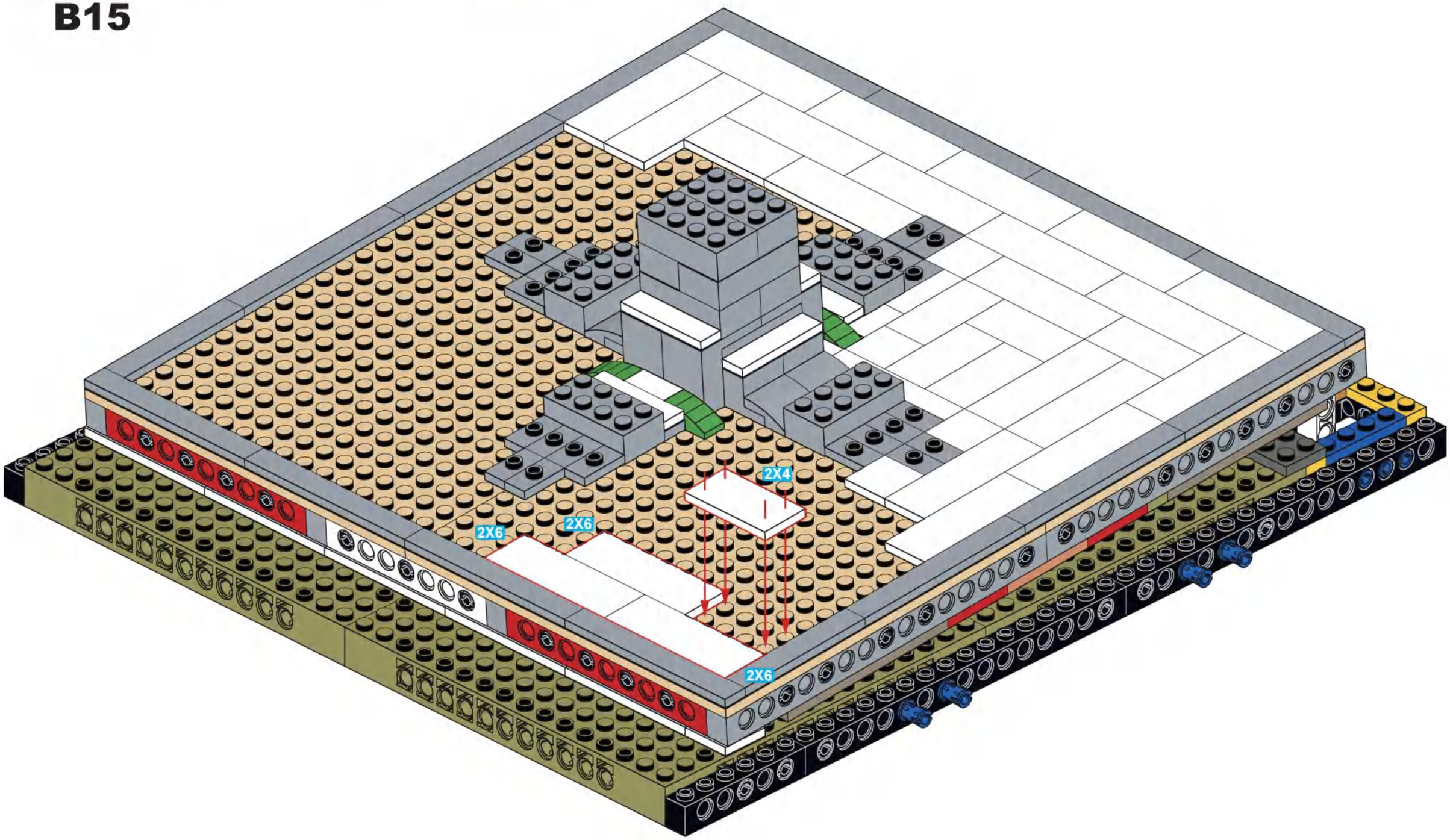

B16

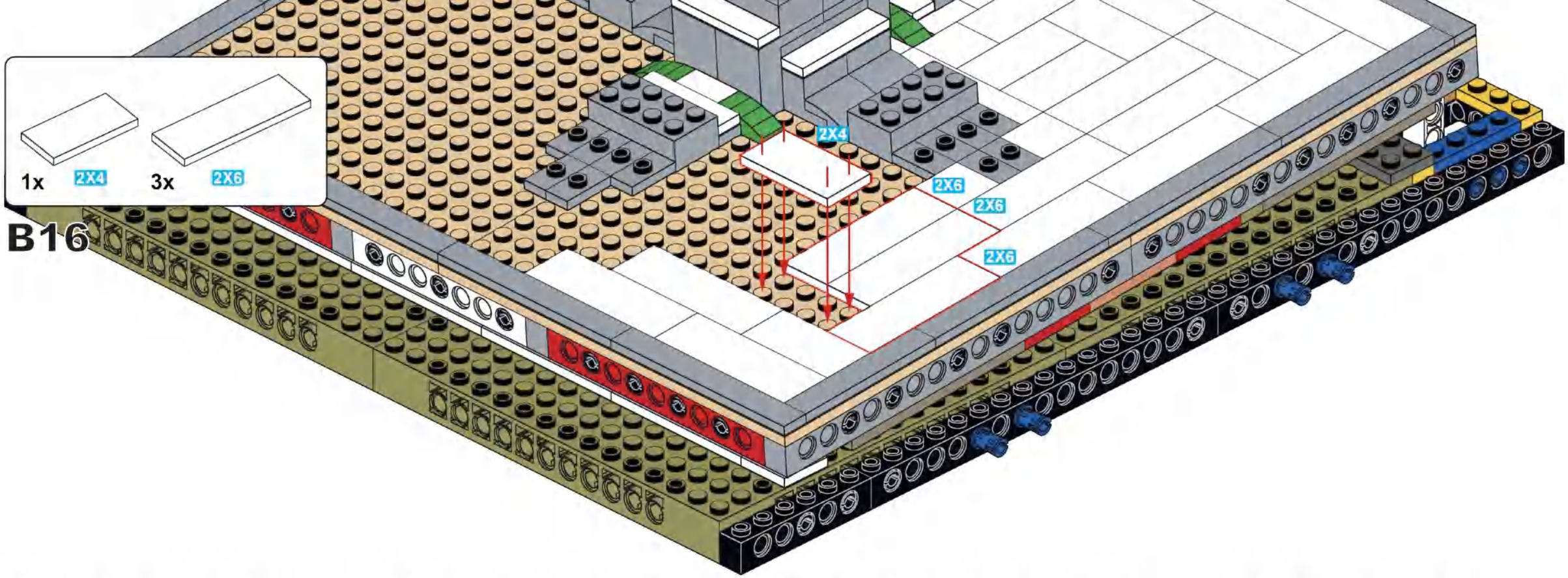
1x 2X4
3x 2X6
2X4
2X6
2X6
2X6

B17

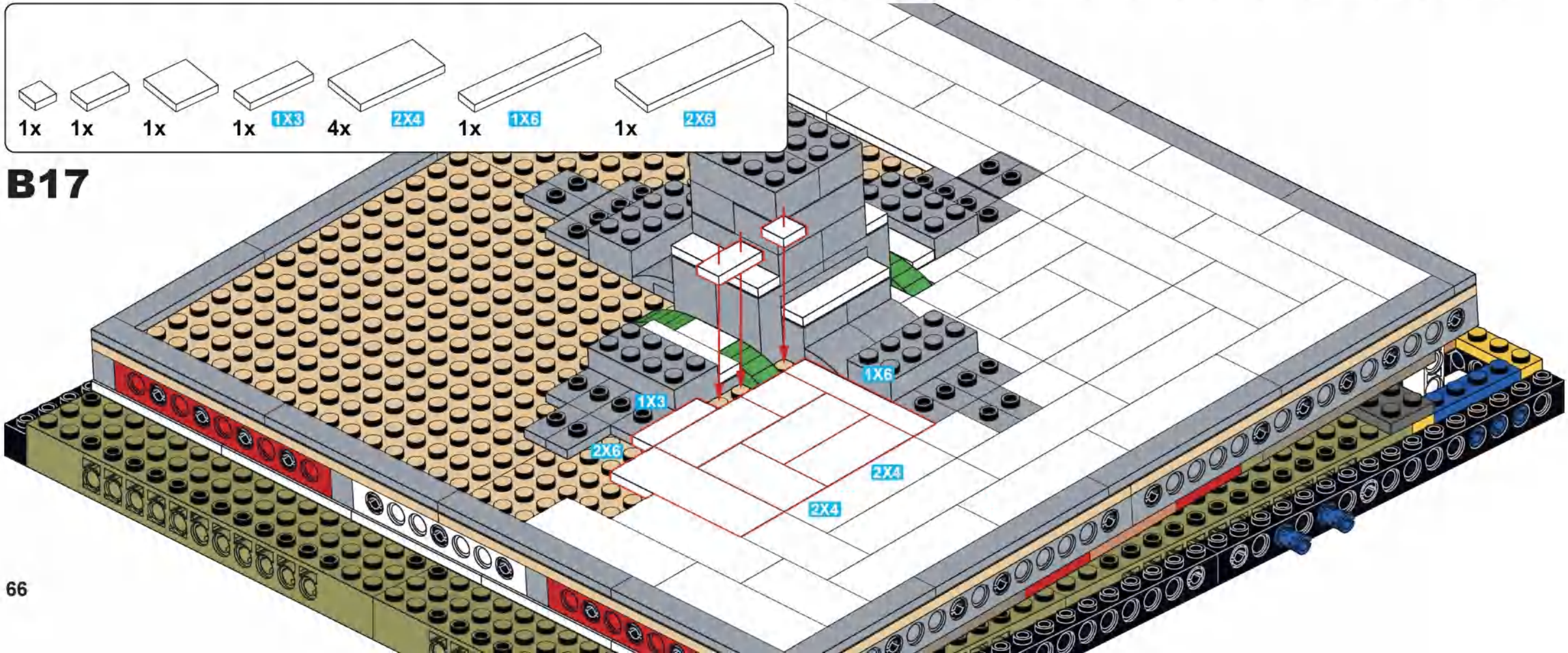
1x
1x
1x
1x 1X3
4x 2X4
1x 1X6
1x 2X6
1X6
1X3
2X6
2X4
2X4

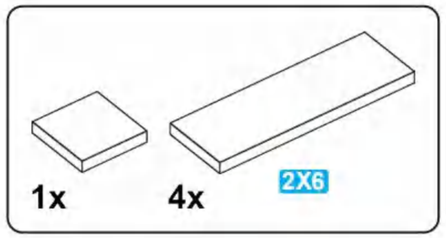

B18

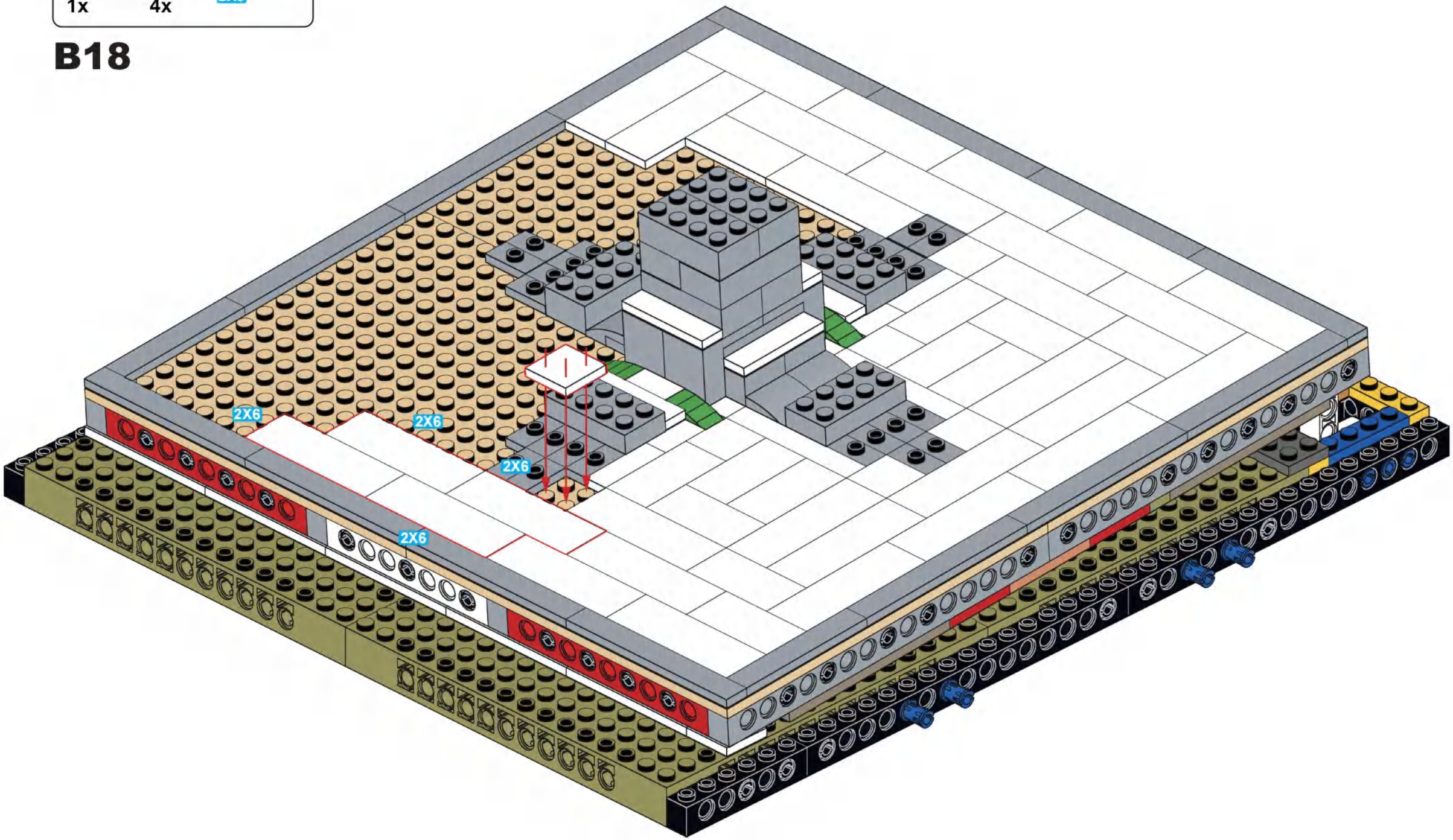

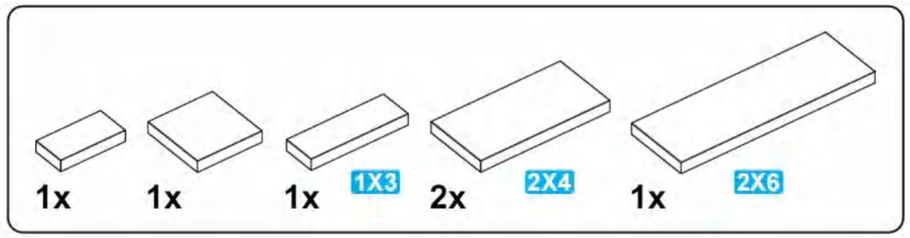

B19

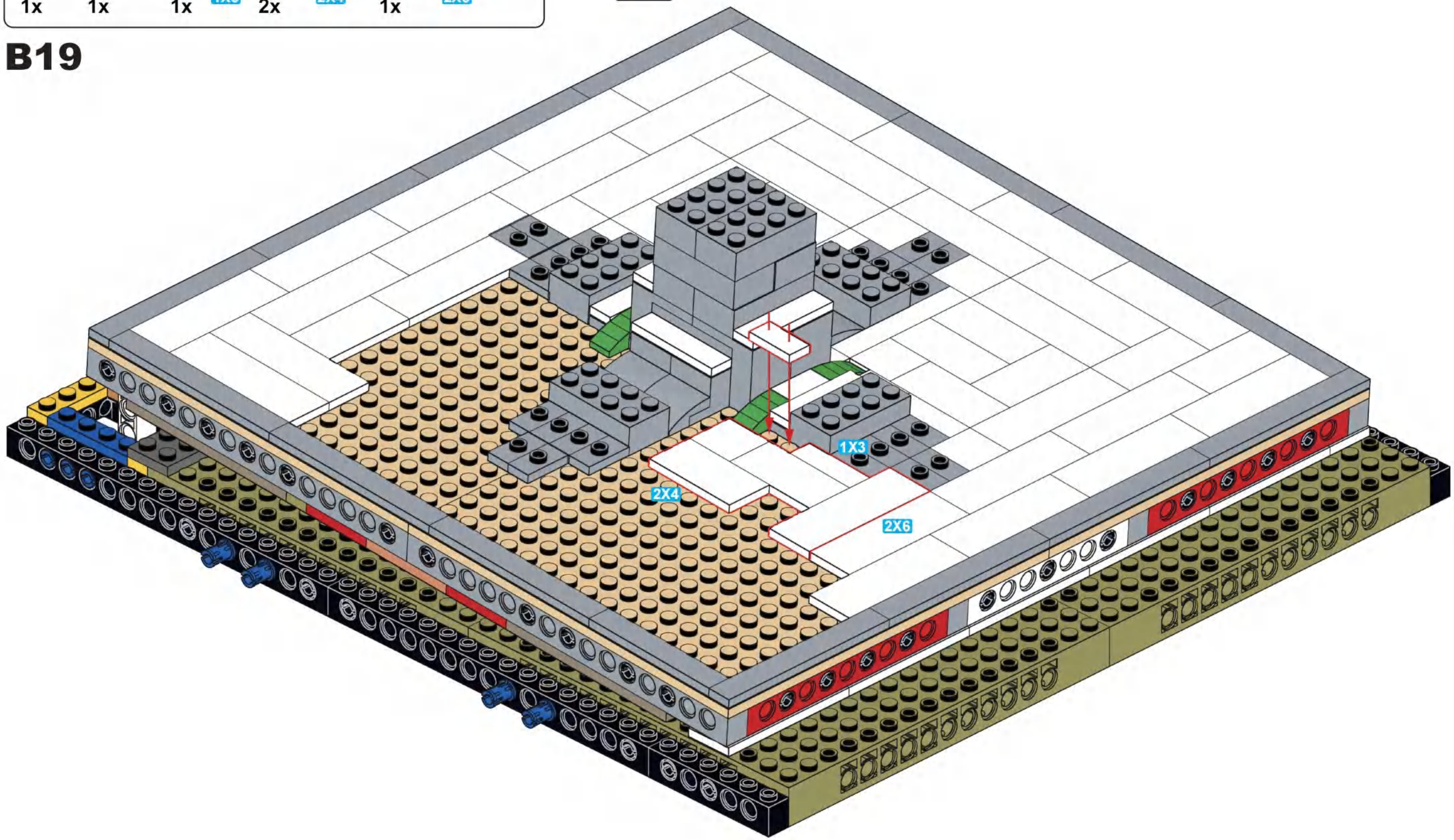

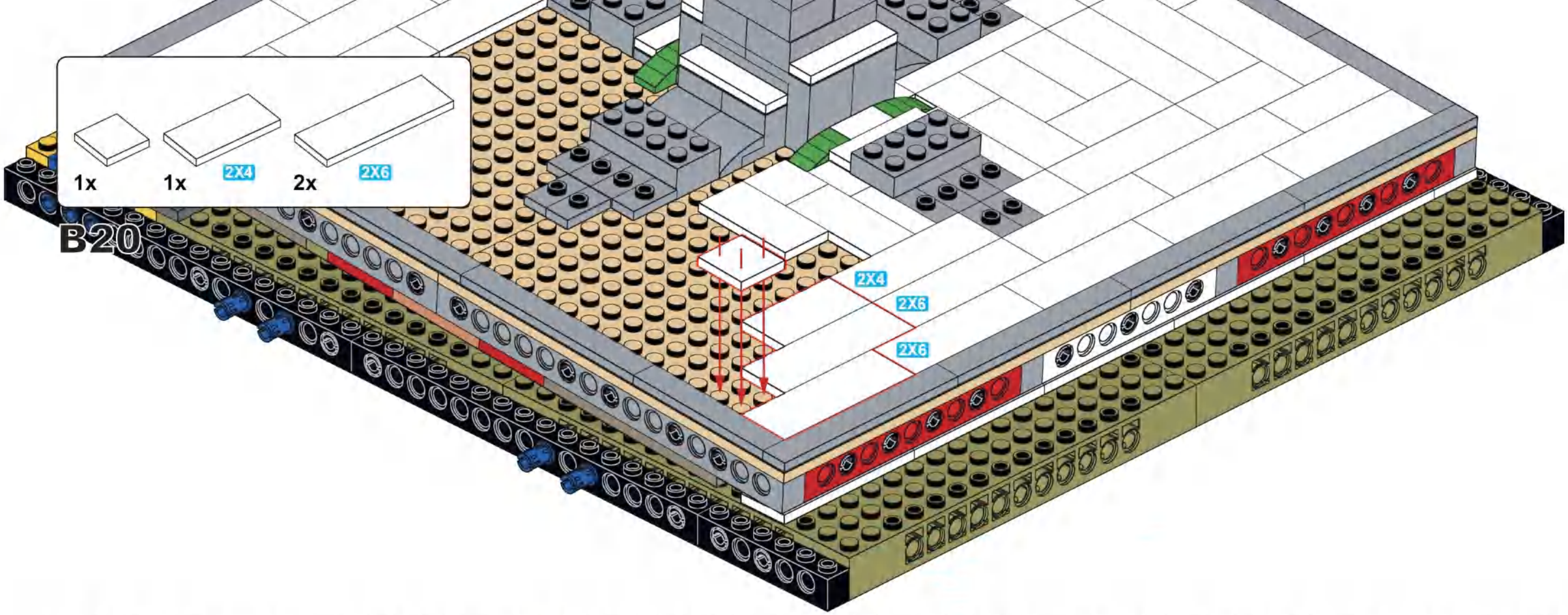
1x
1x
2X4
2x
2X6
B20
2X4
2X6
2X6

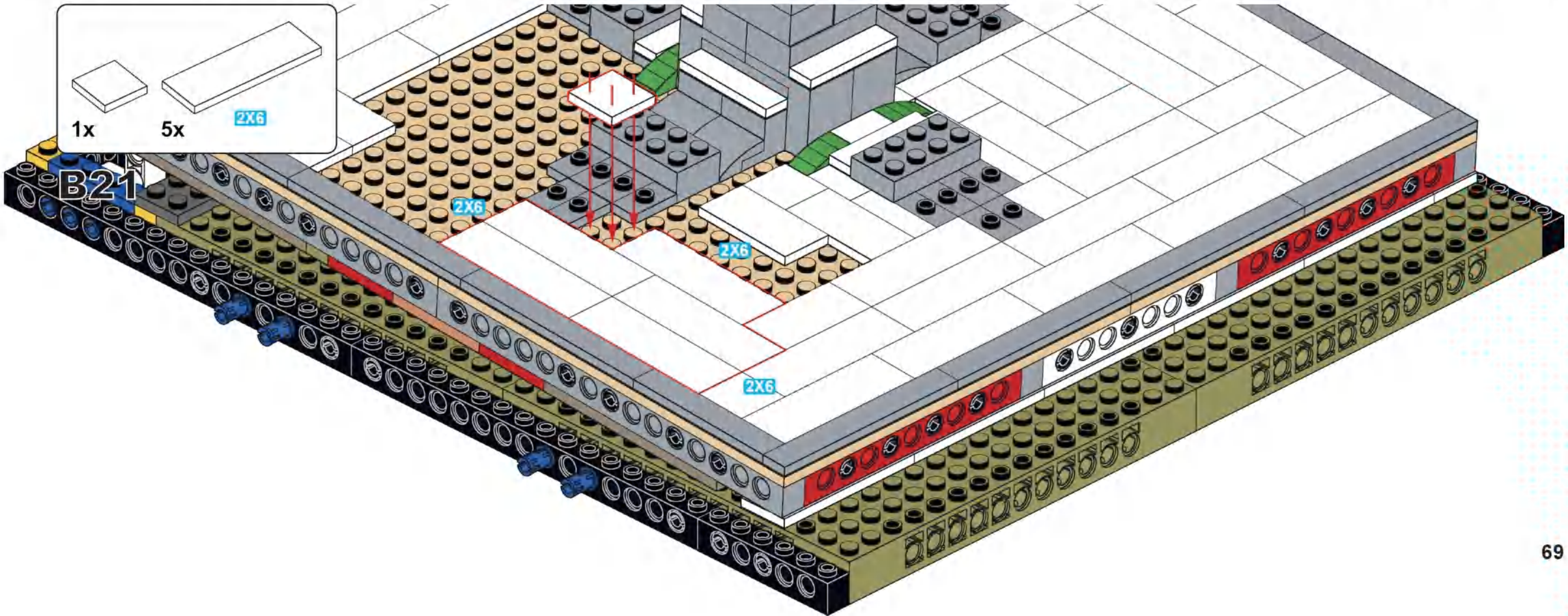
1x
5x
2X6
B21
2X6
2X6
2X6

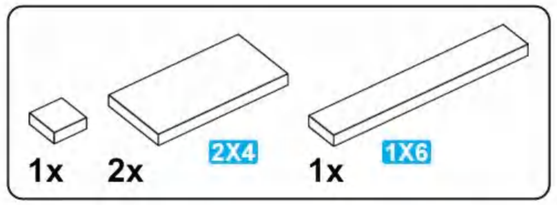

B22

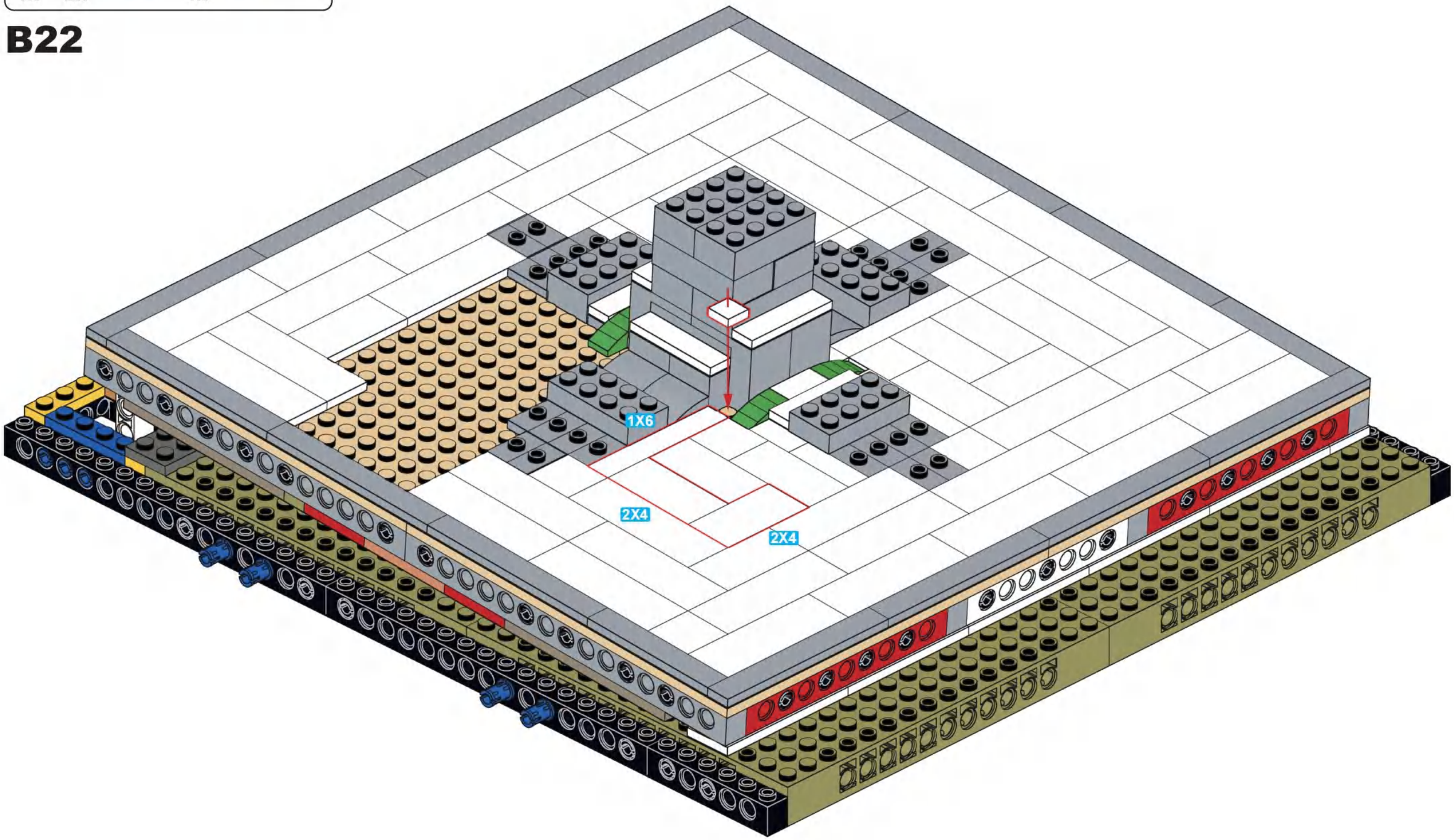

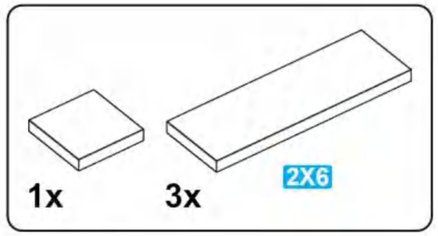

B23

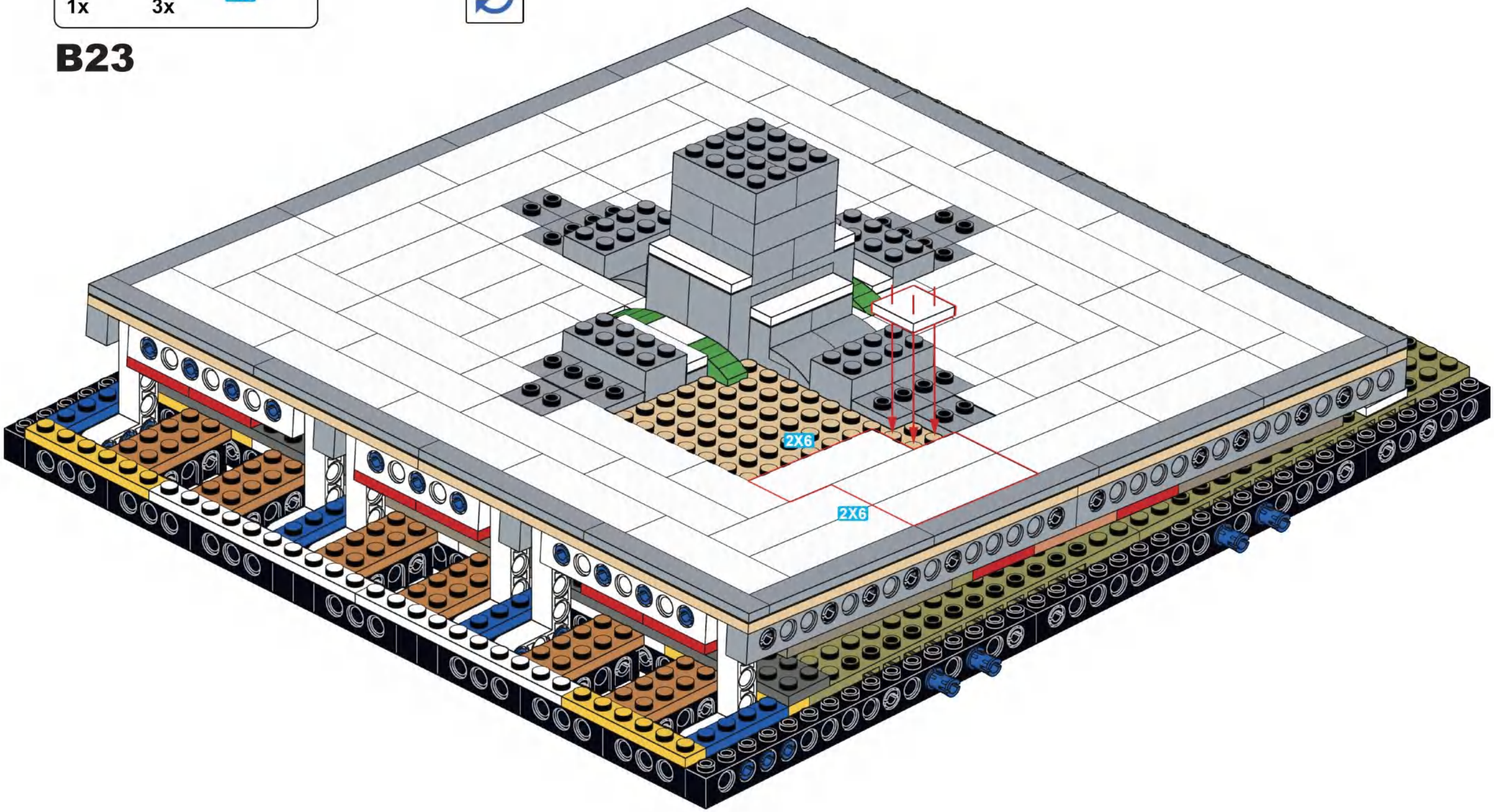

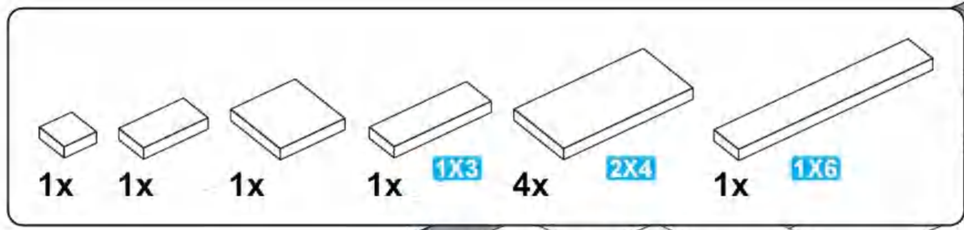

B24

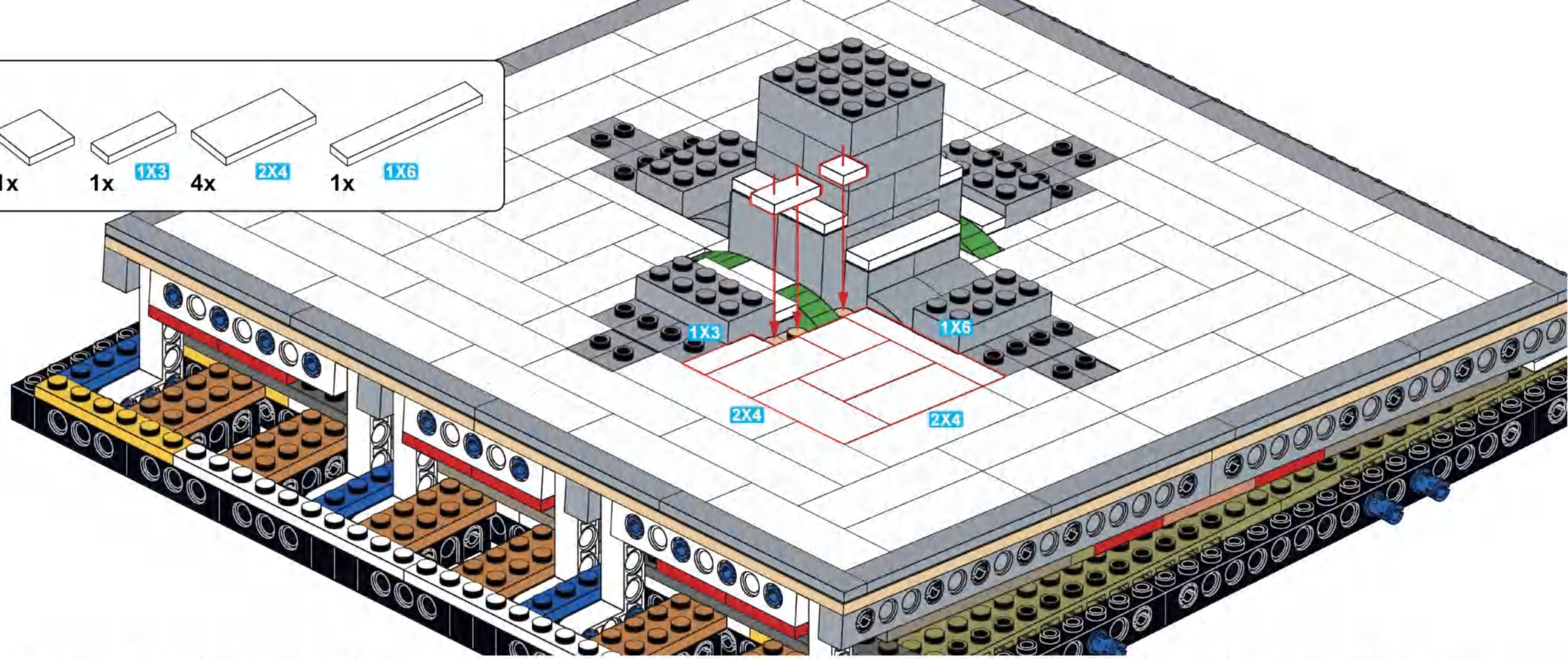

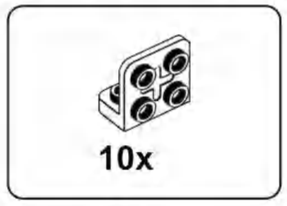

B25

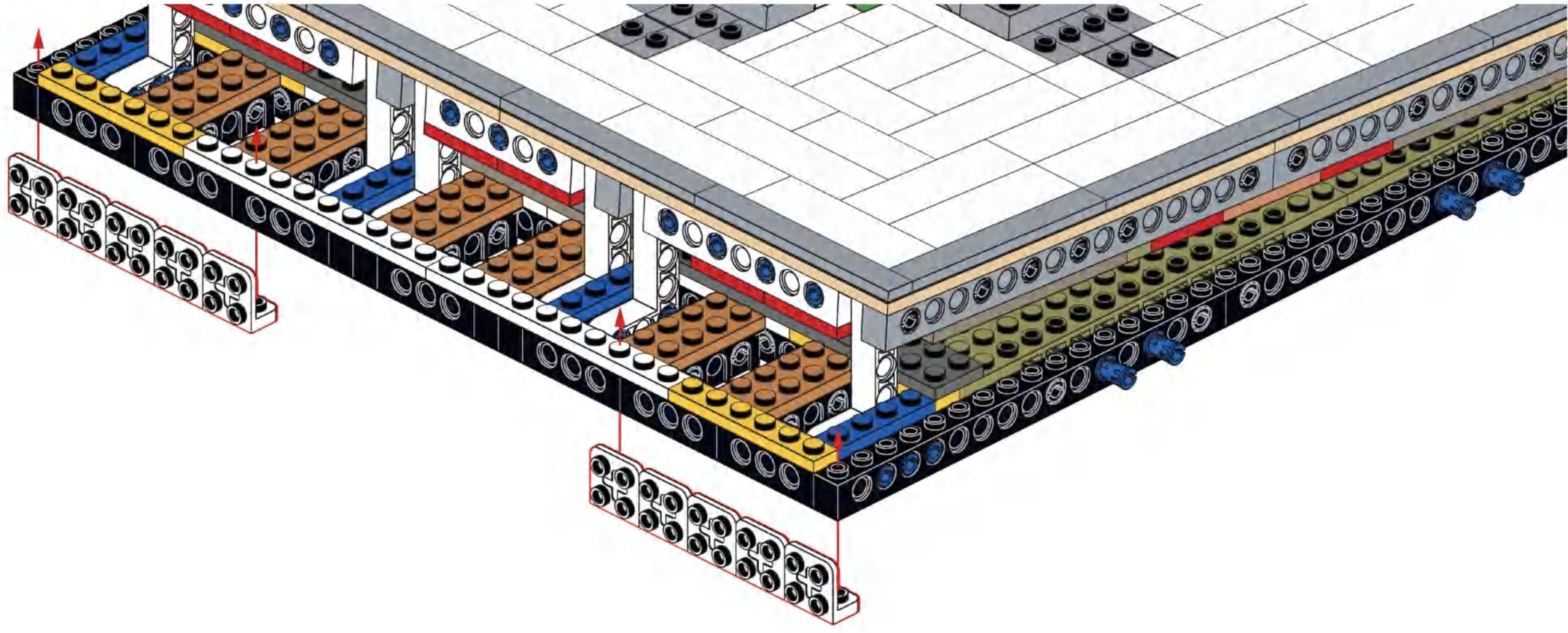

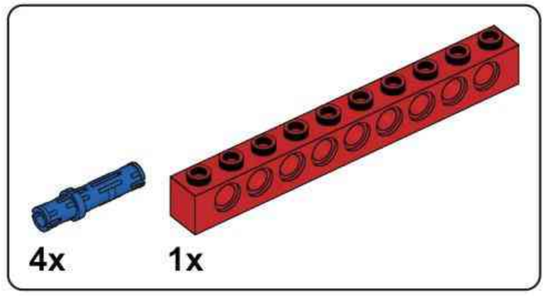

B26

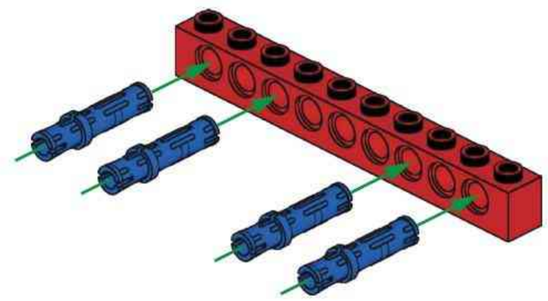

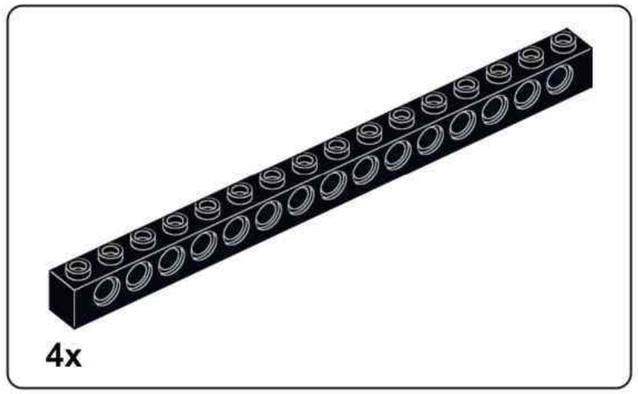

B27

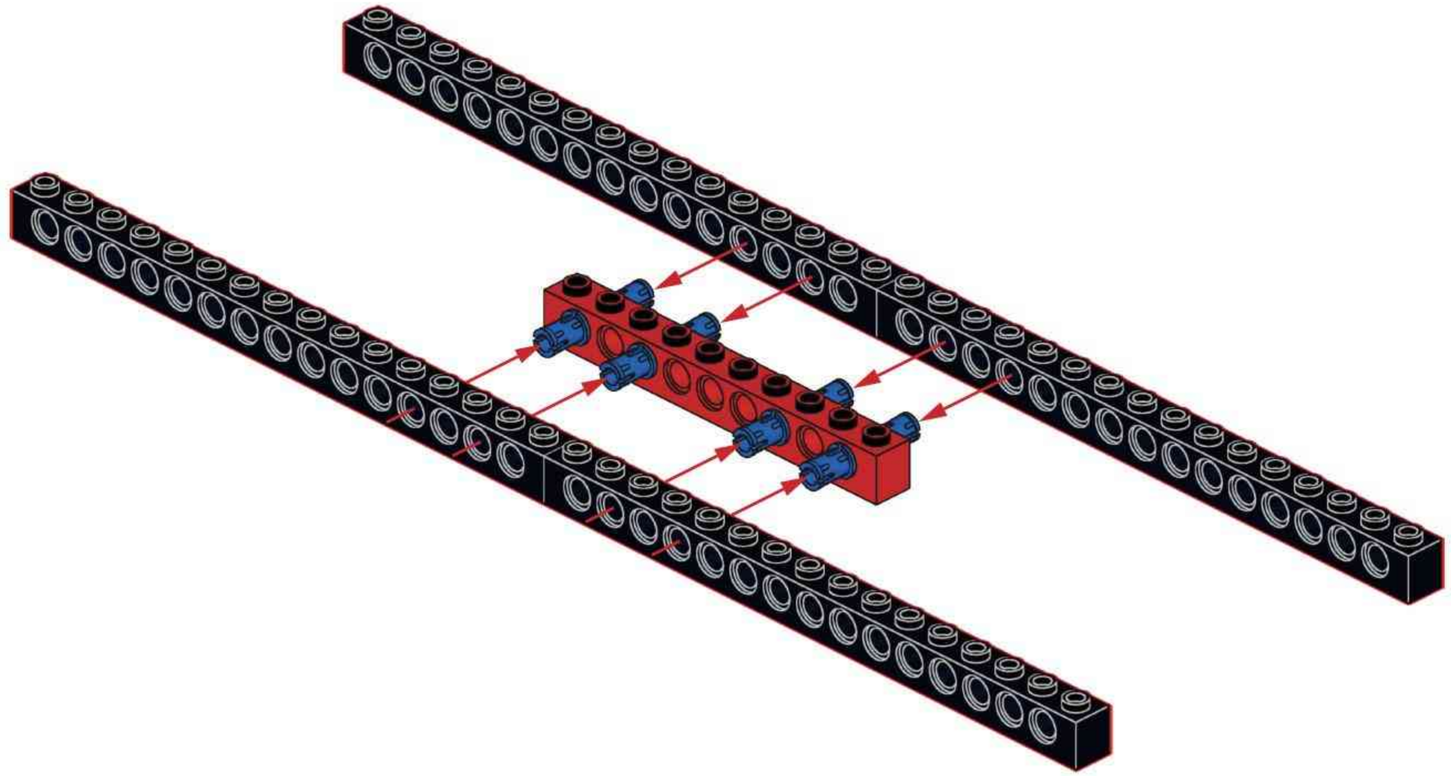

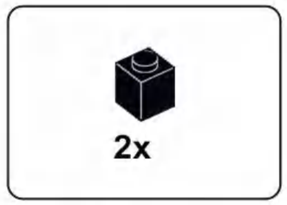

B28

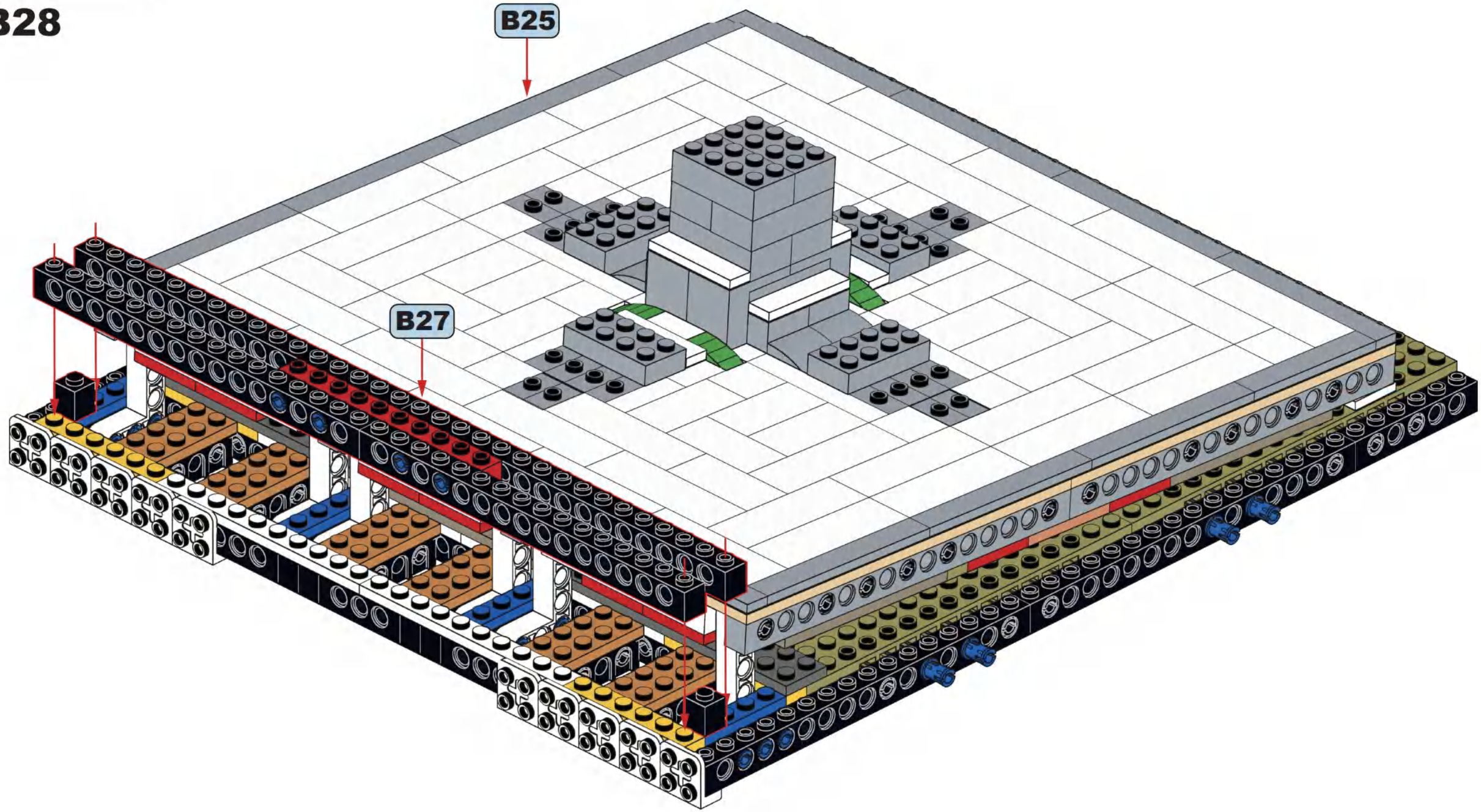

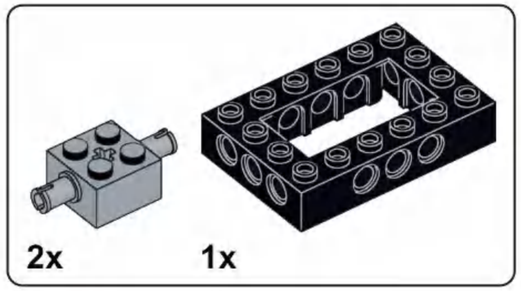

B29

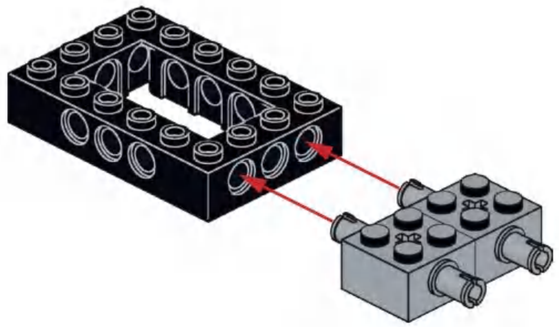

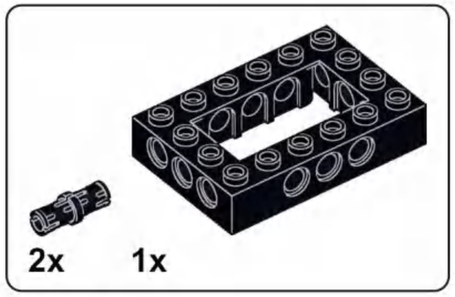

B30

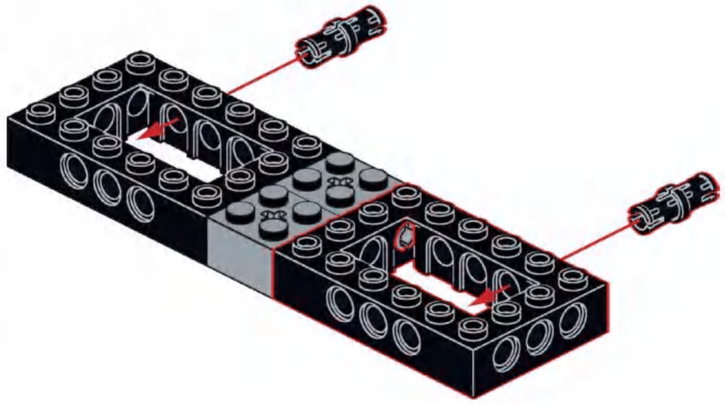

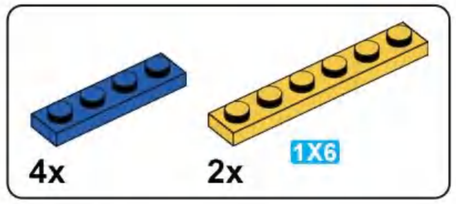

B31

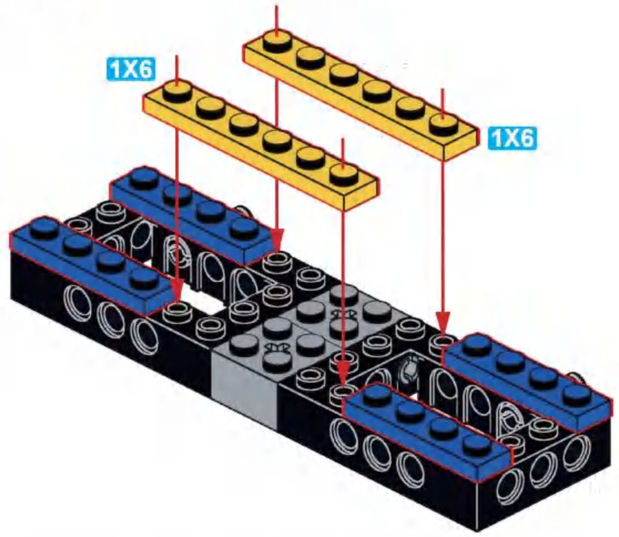

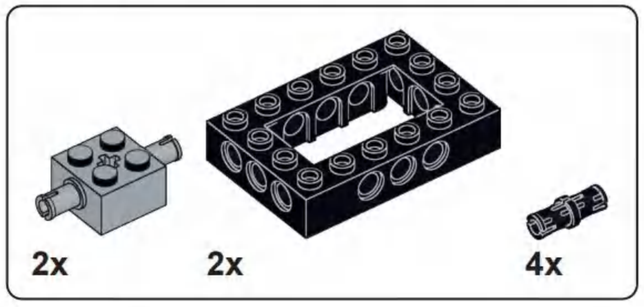

B32

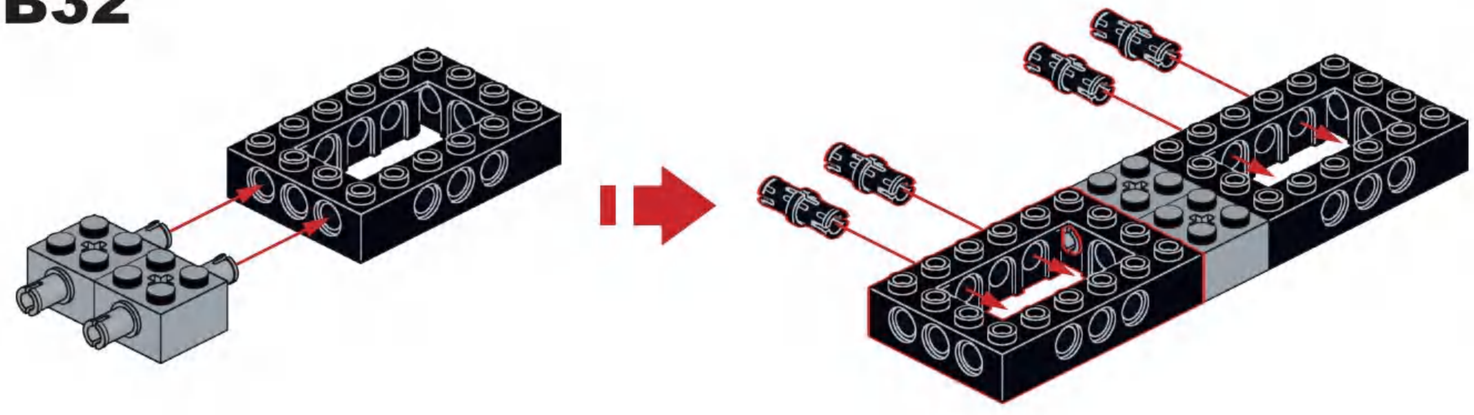

B33

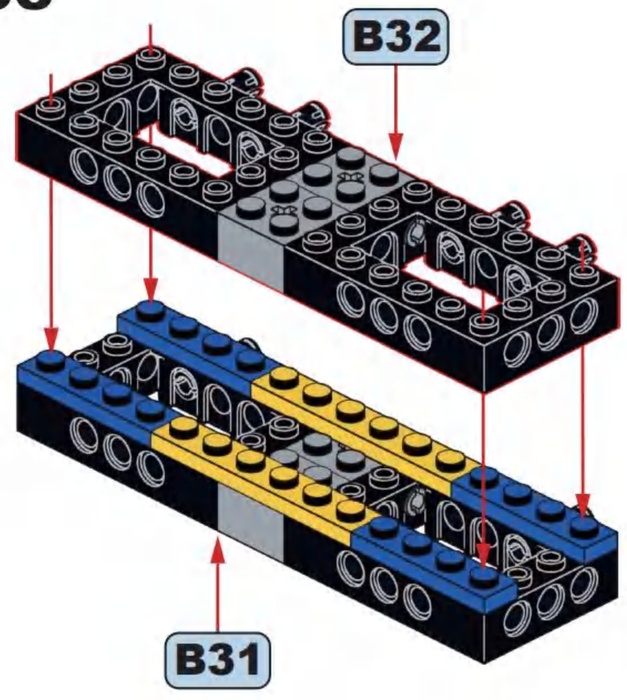

B34

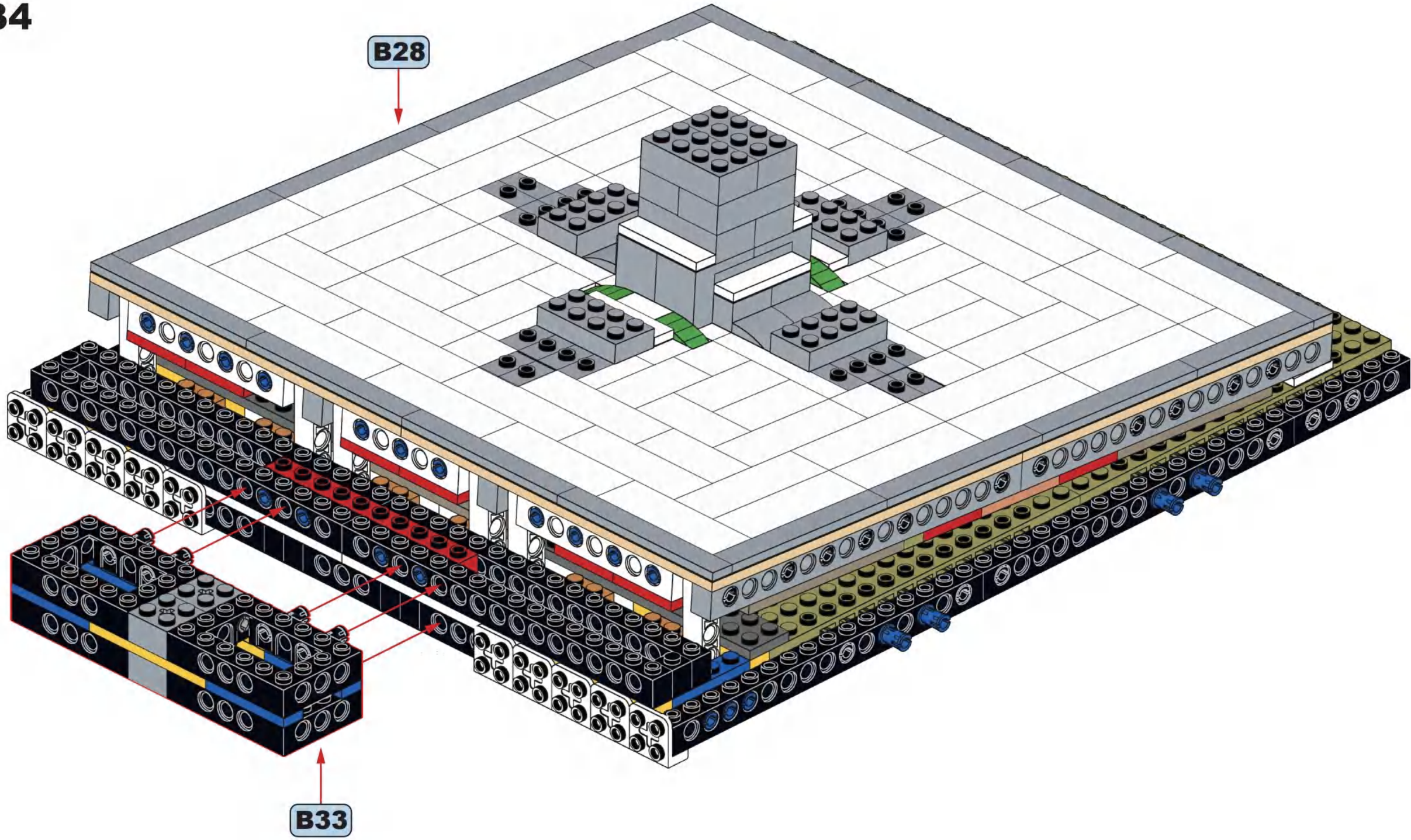

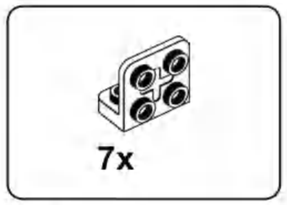

B35

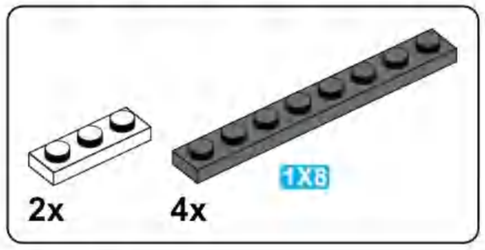

B36

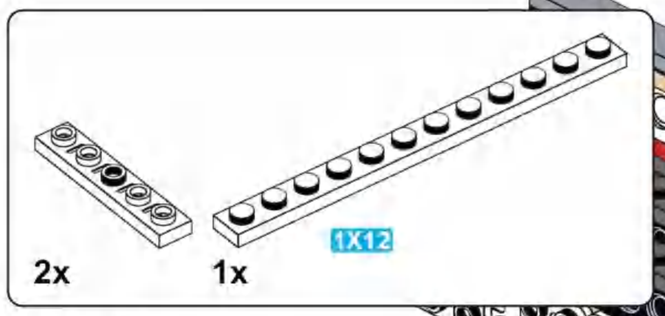

B37

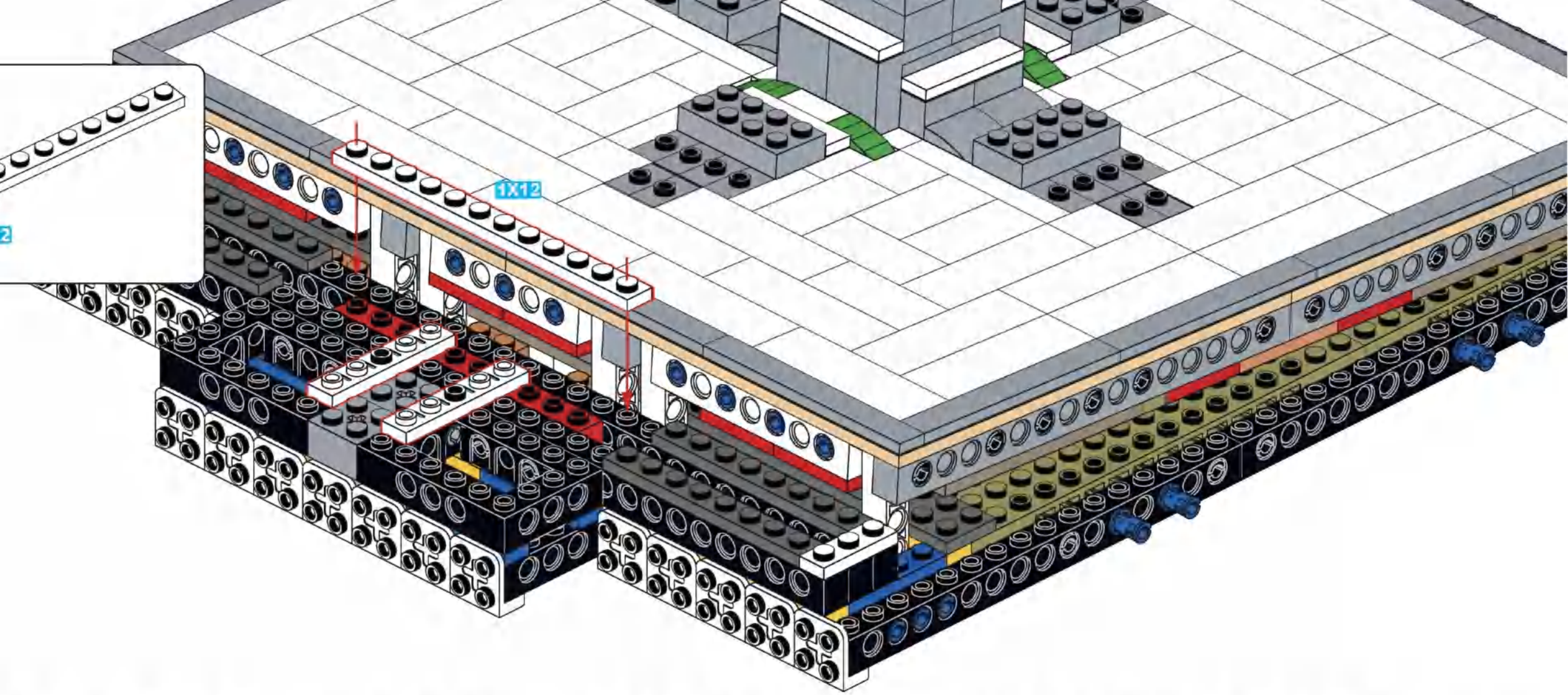

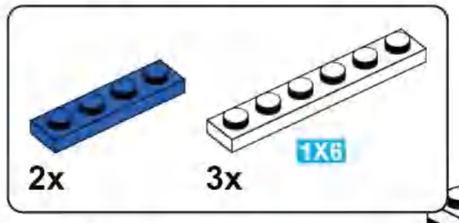

B38

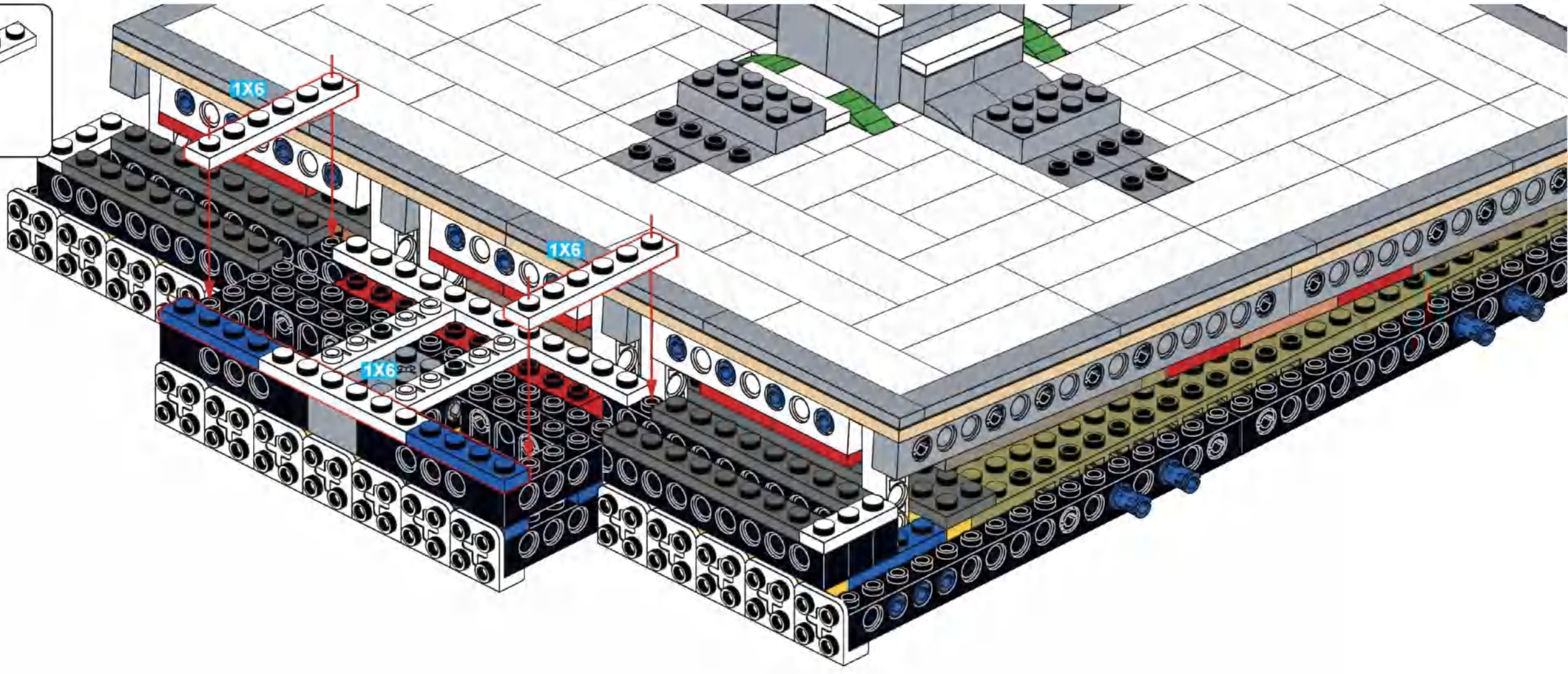

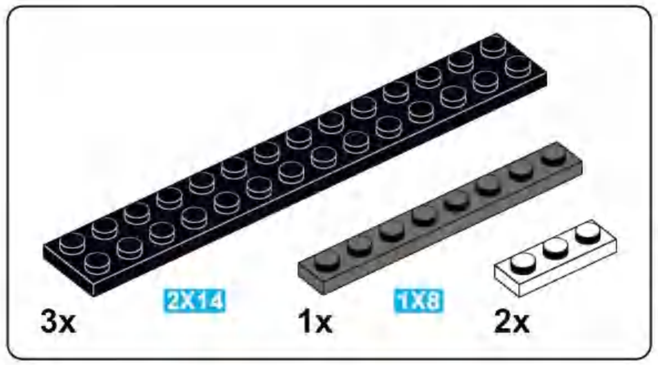

B39

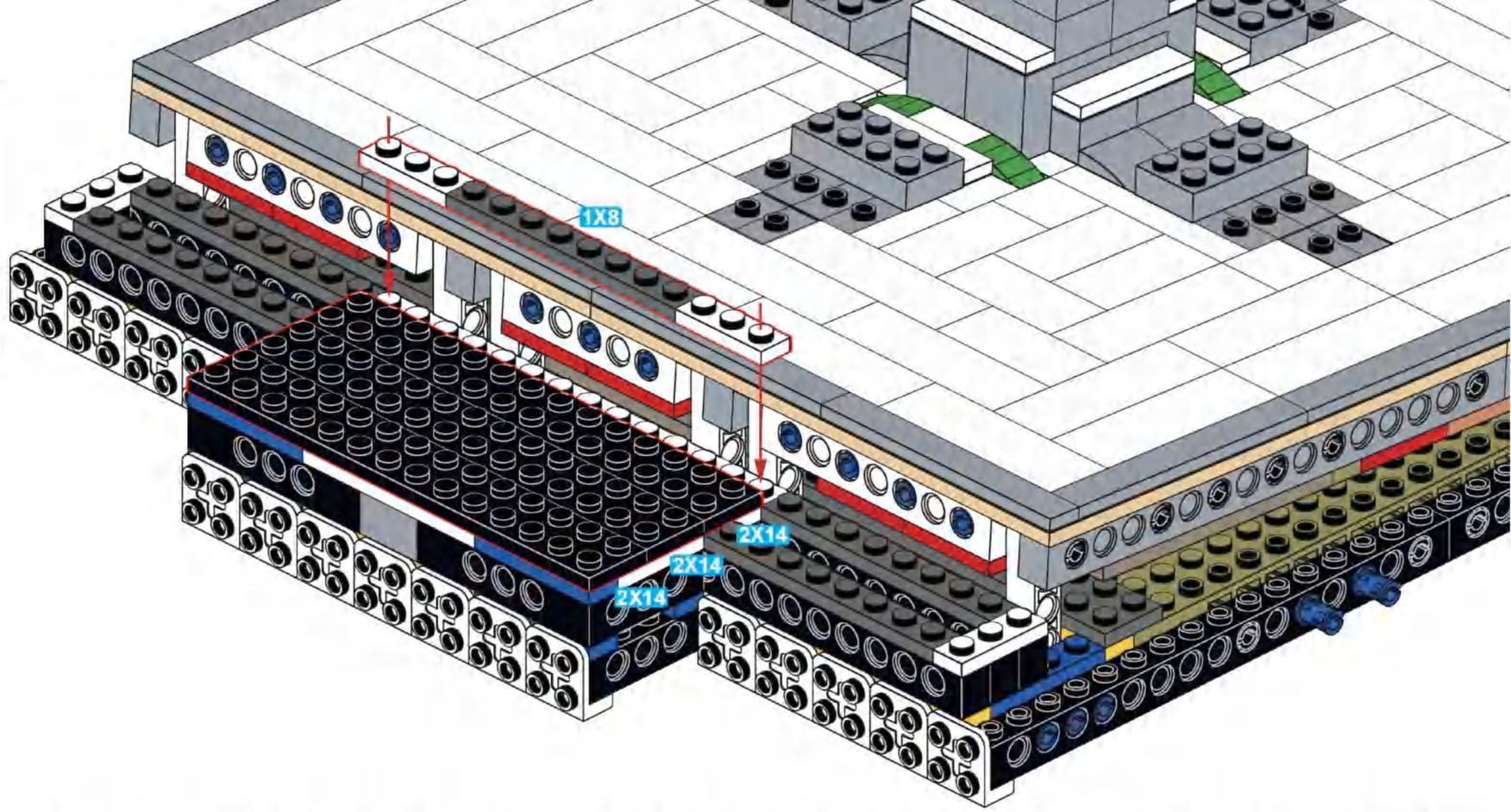

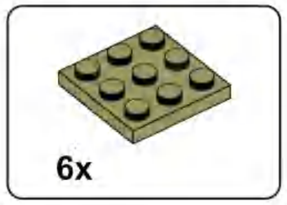

B40

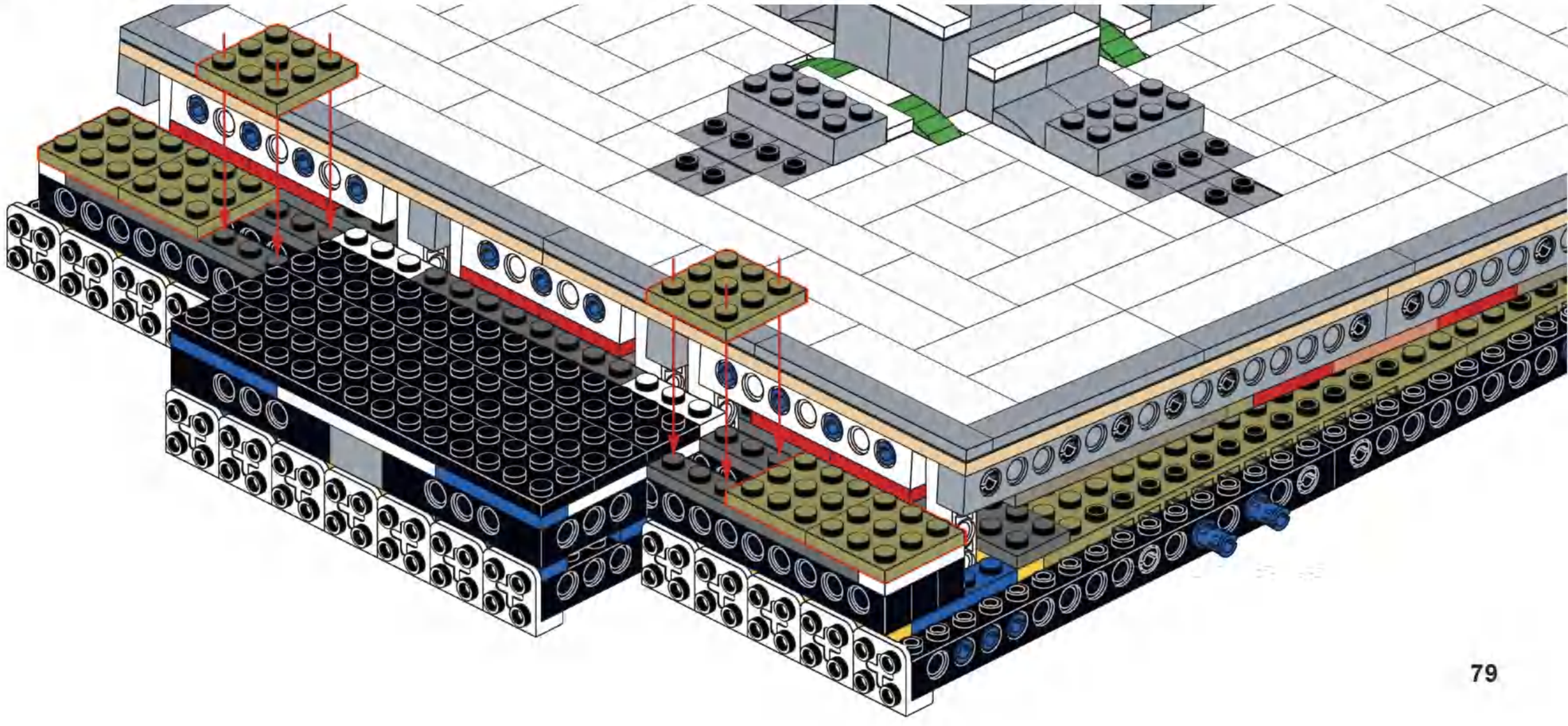

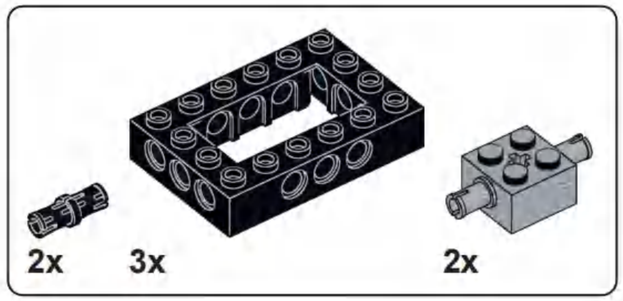

B41

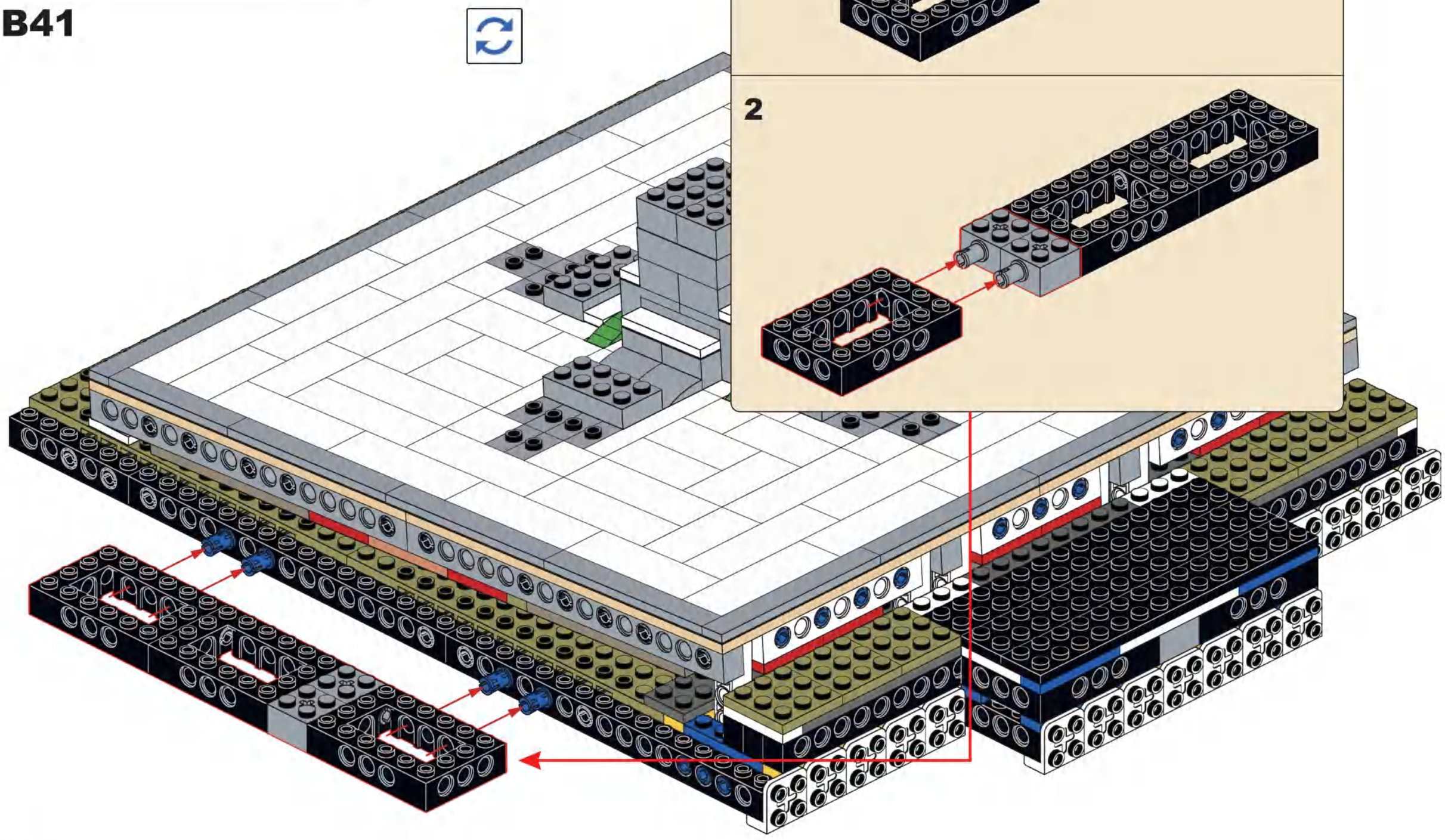

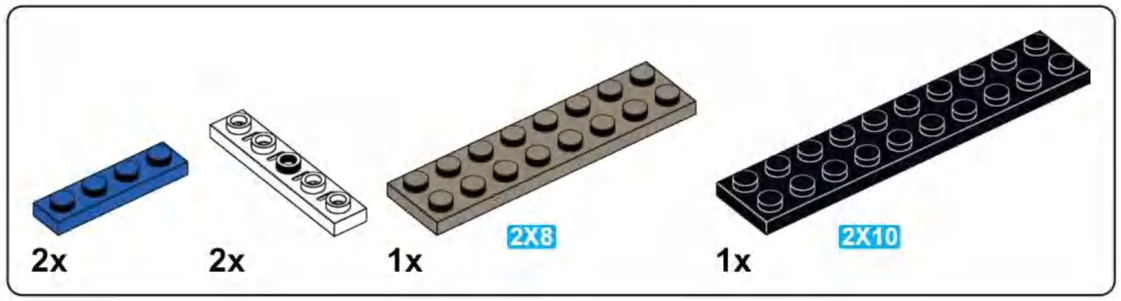

B42

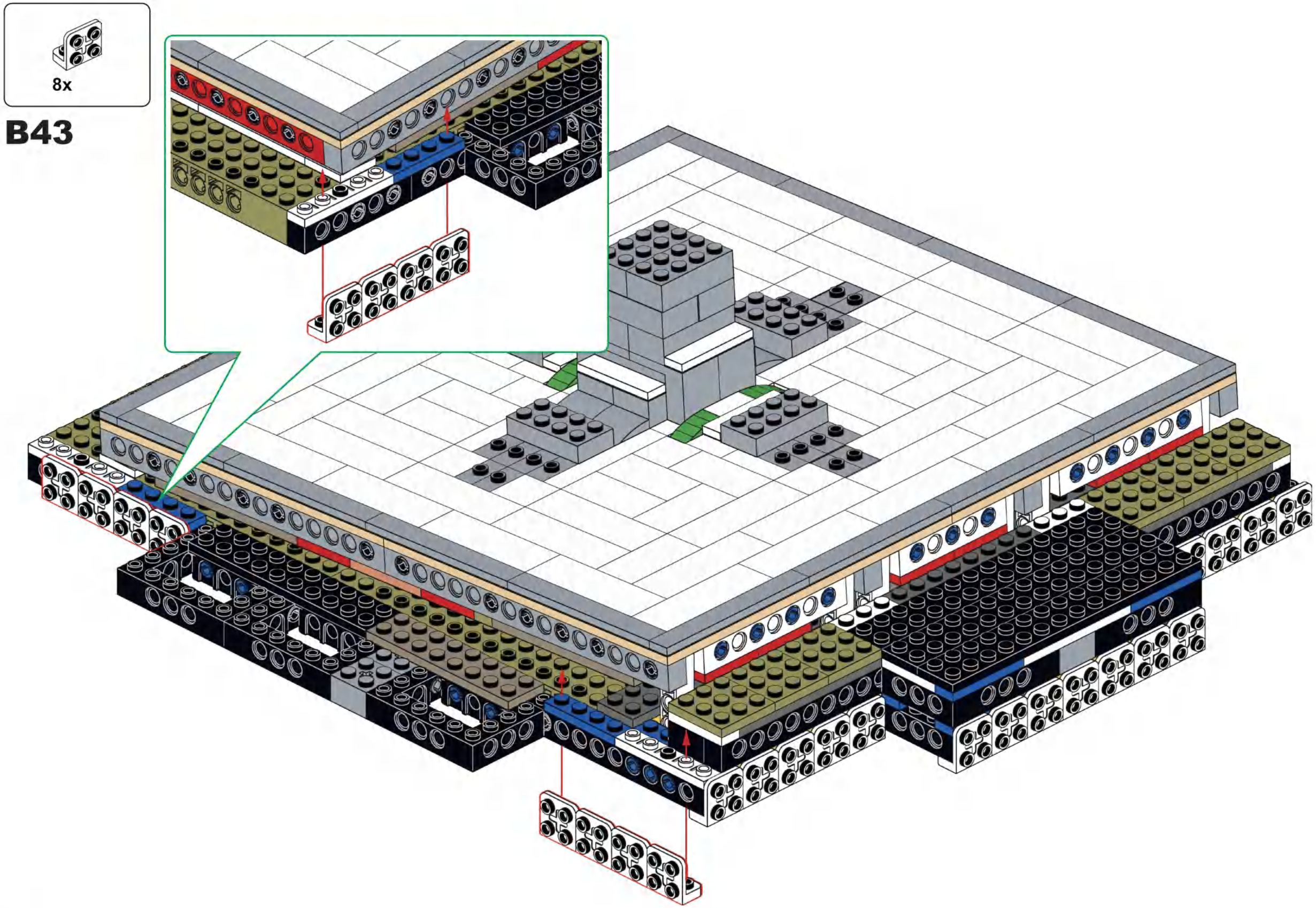
8x
B43

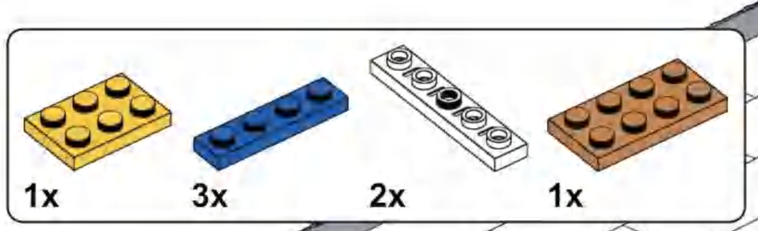

B44

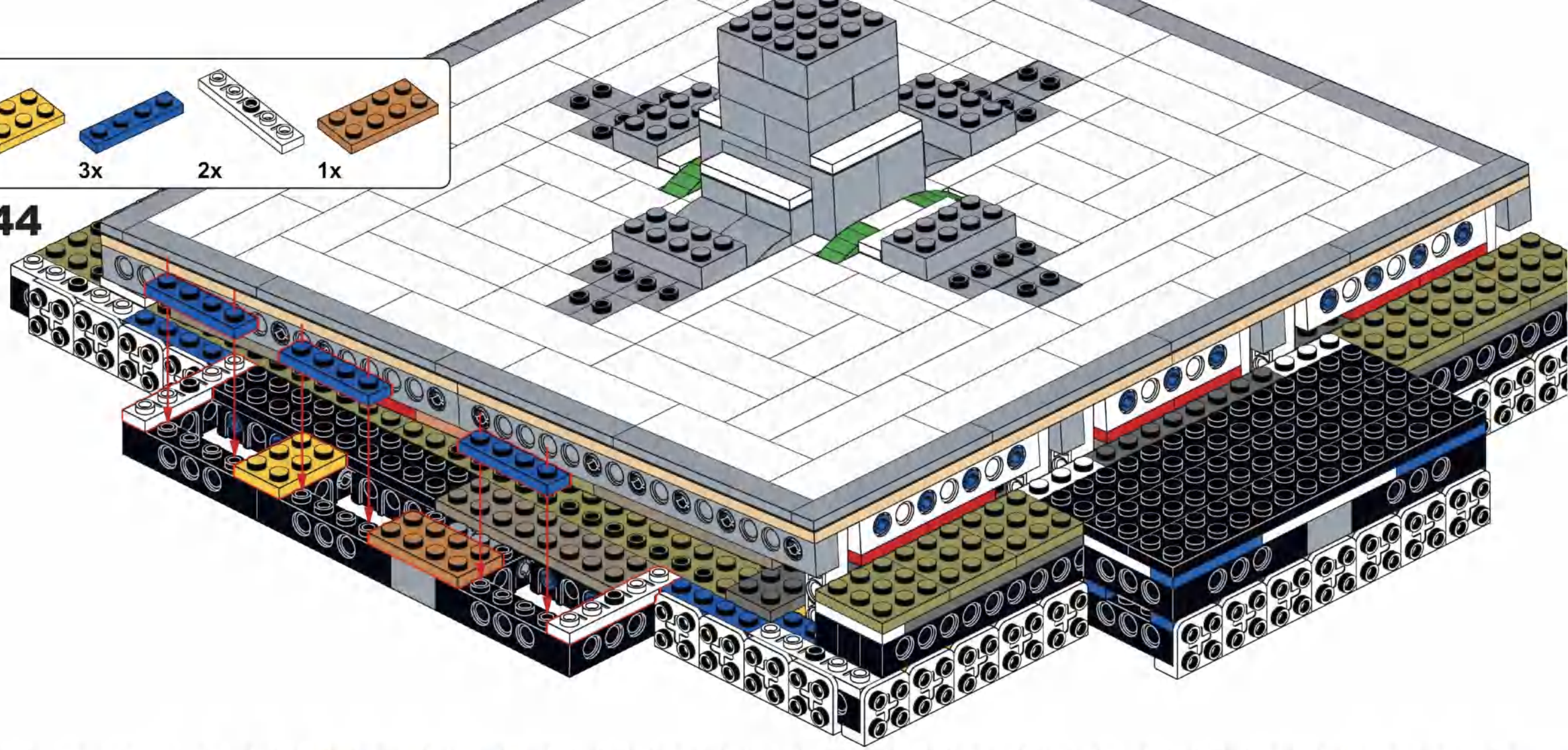

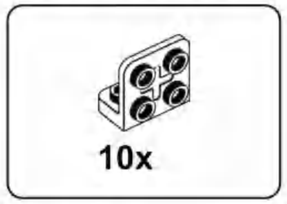

B45

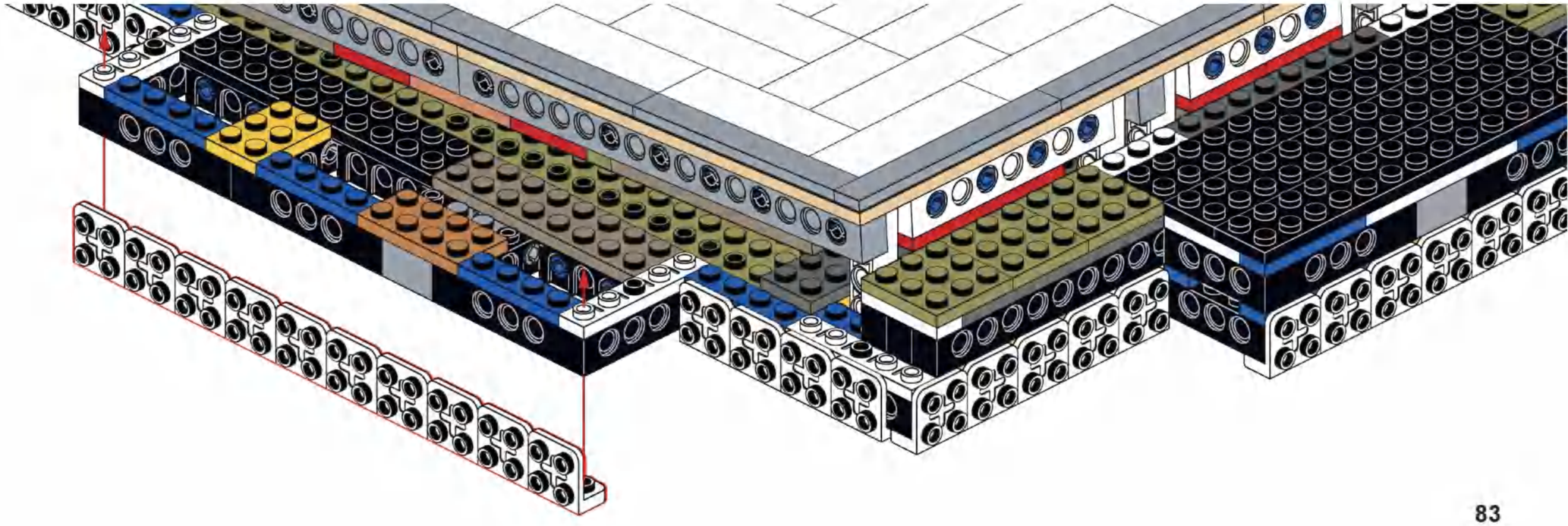

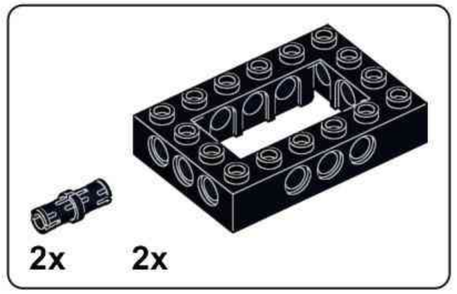

B46

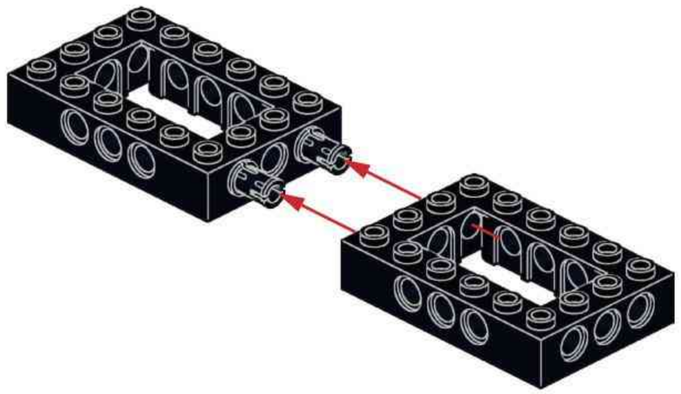

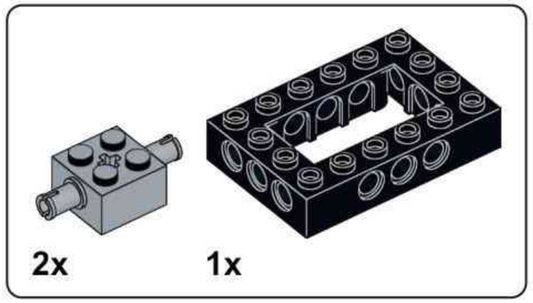

B47

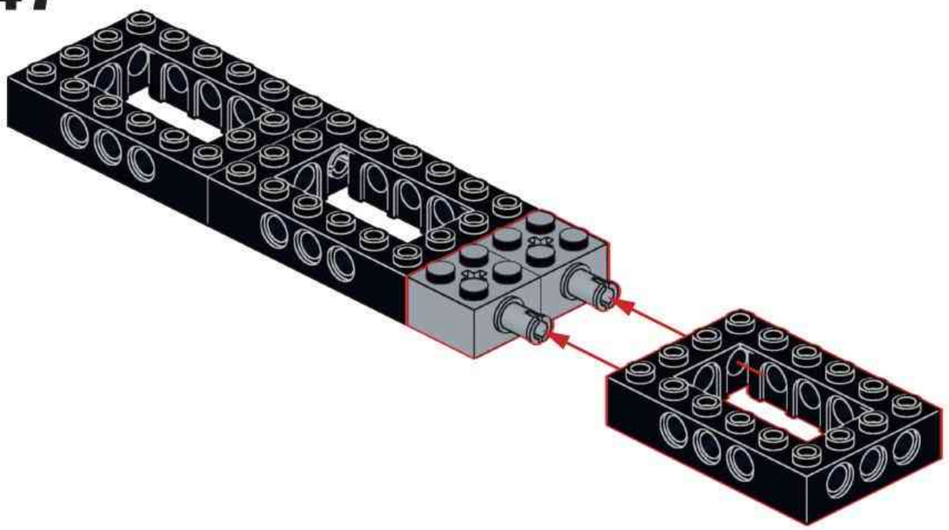

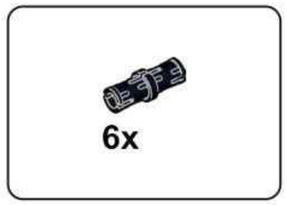

B48

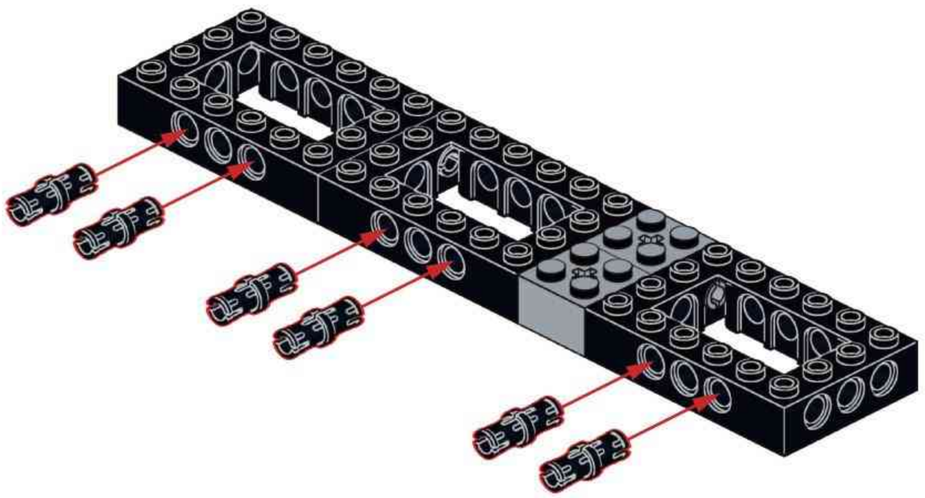

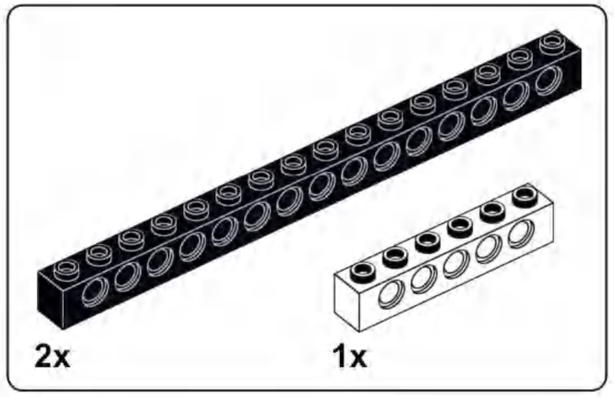

B49

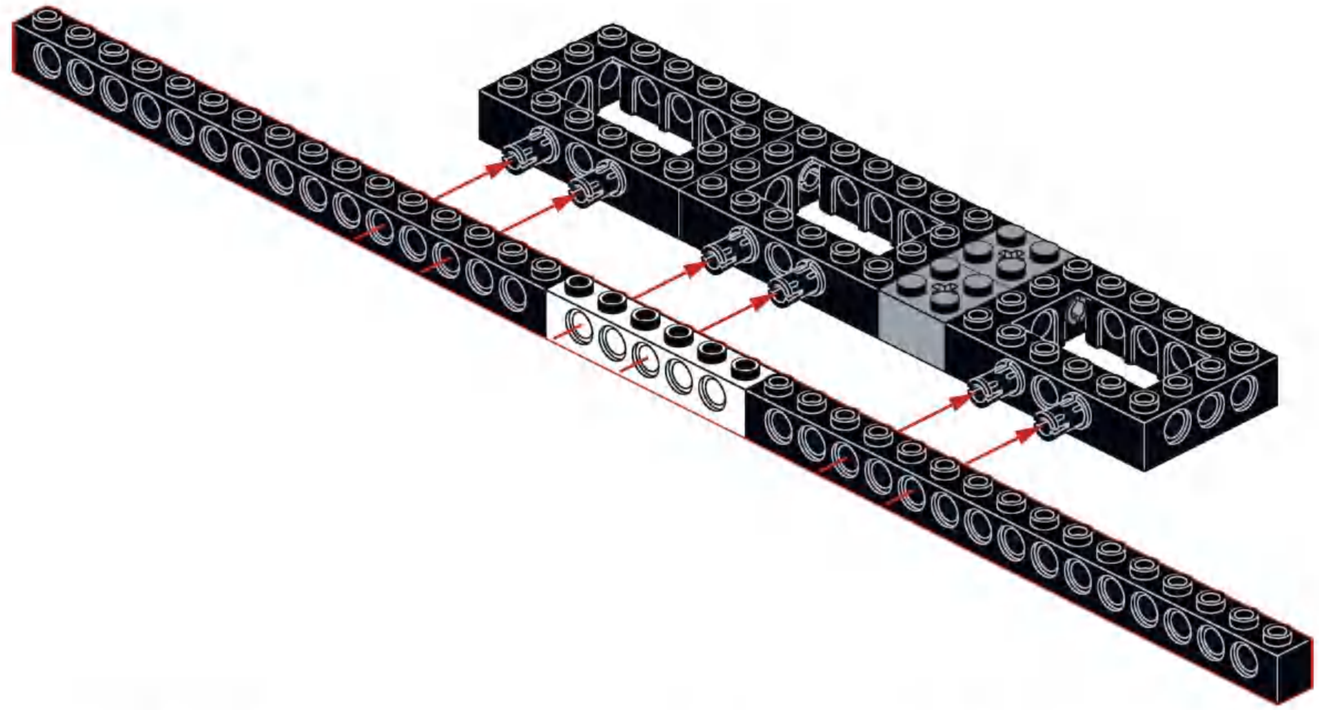

B50

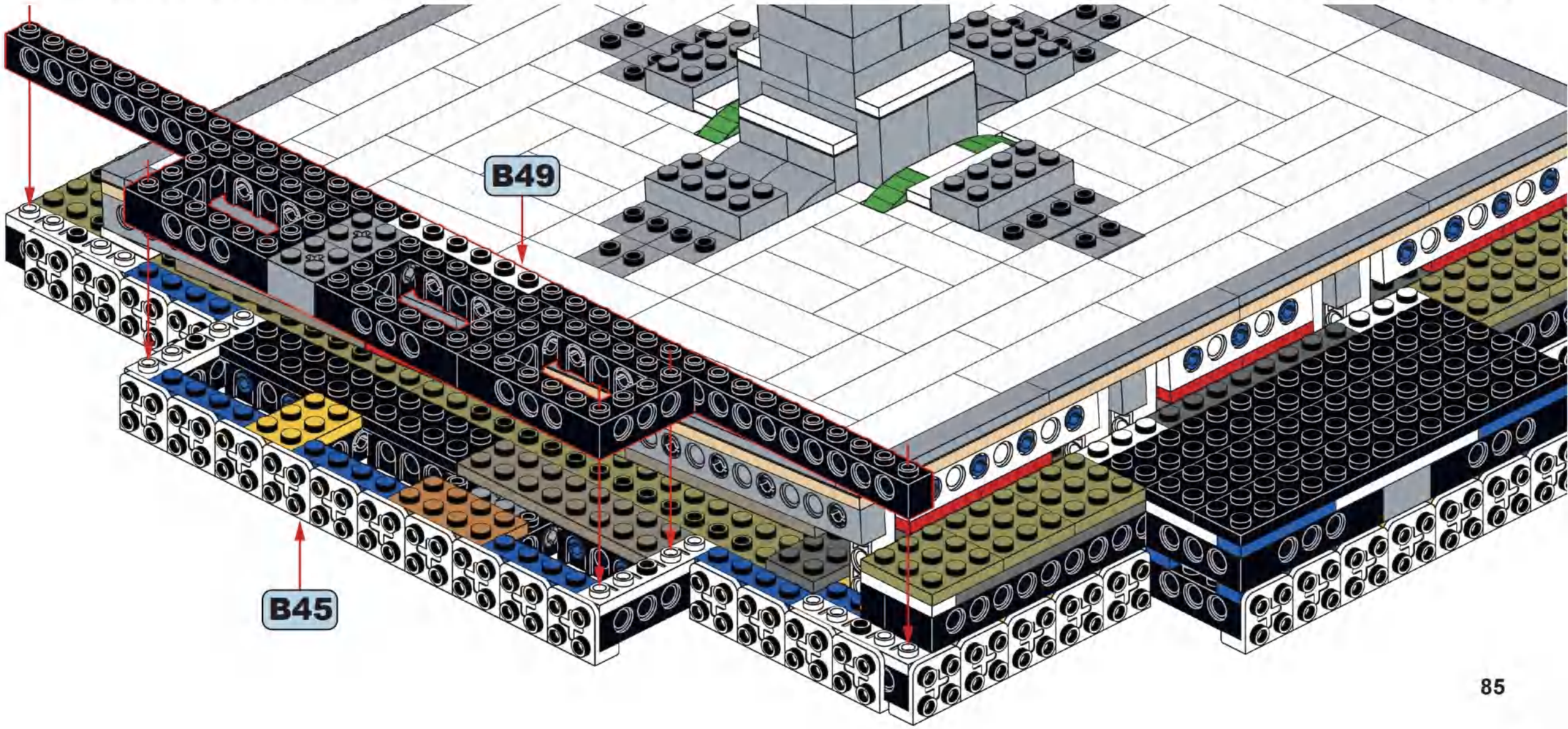

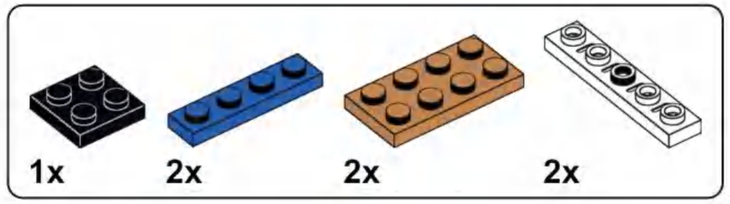

B51

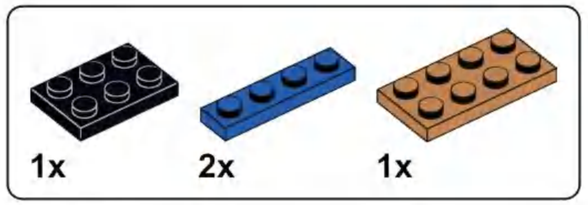

B52

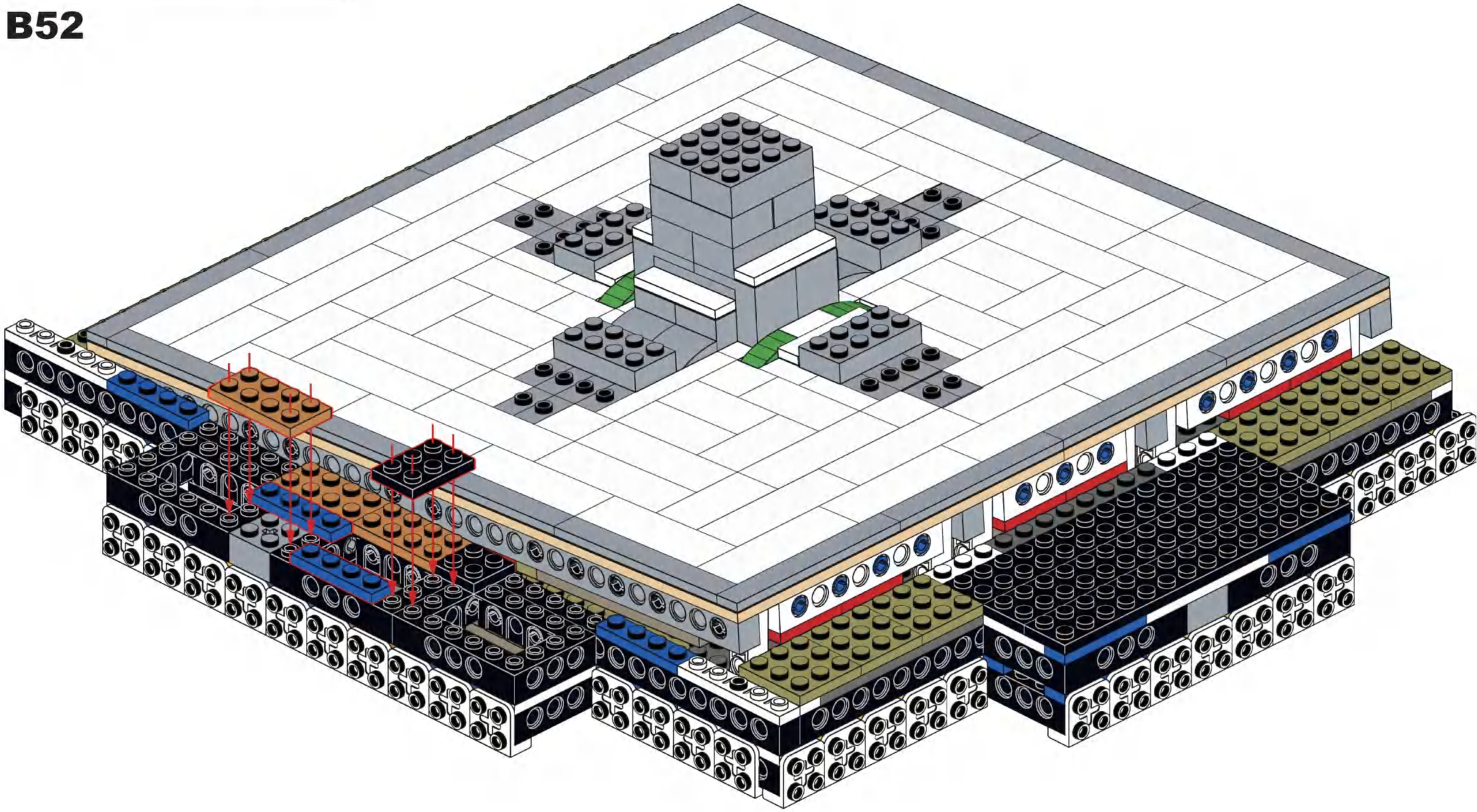

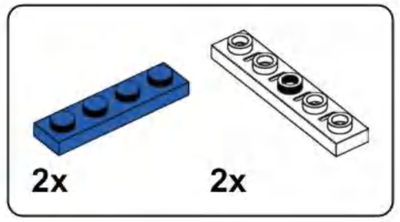

B53

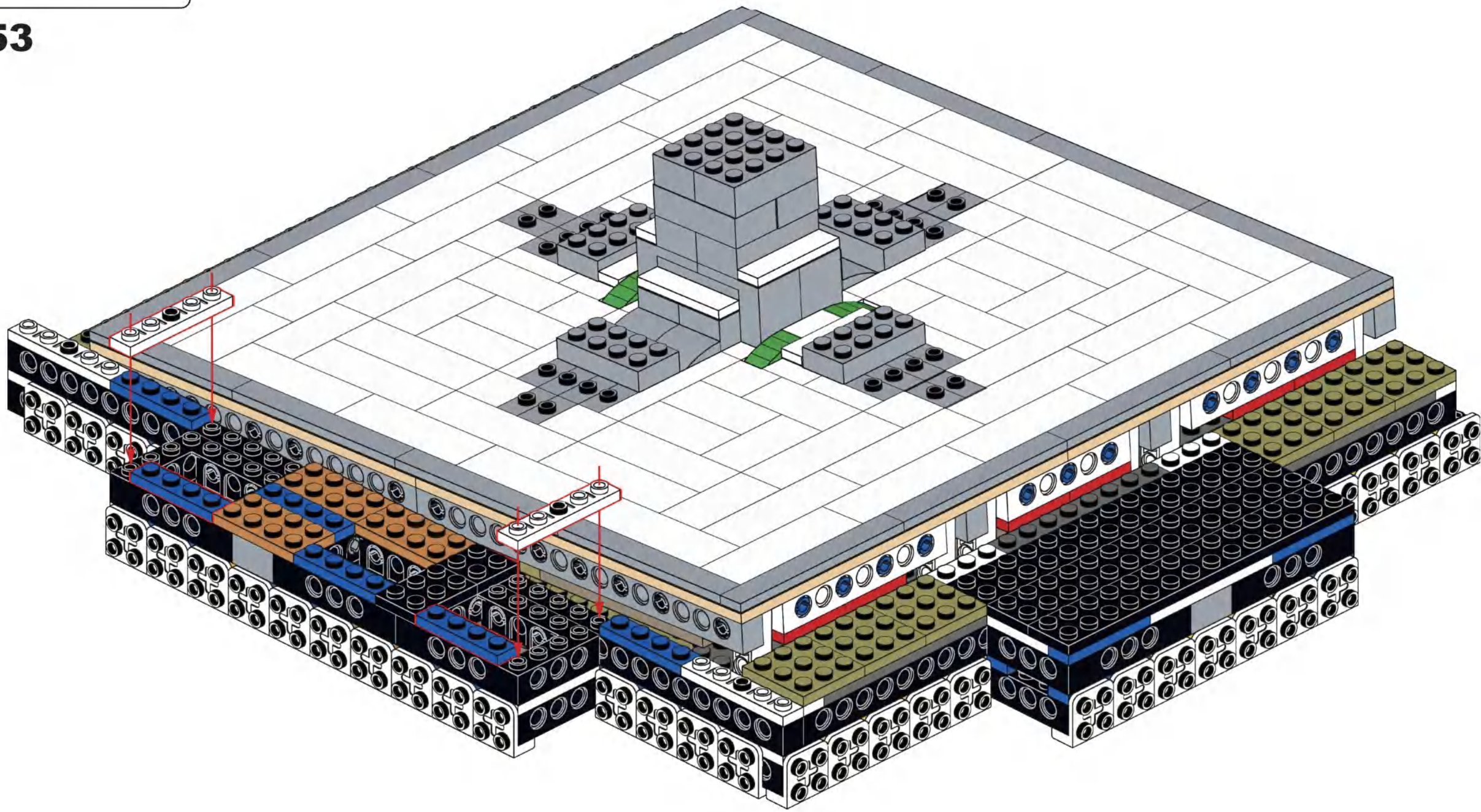

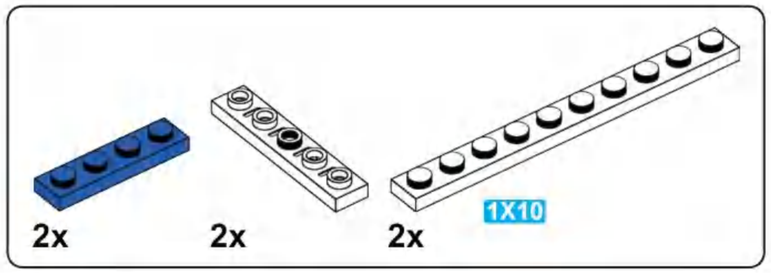

B54

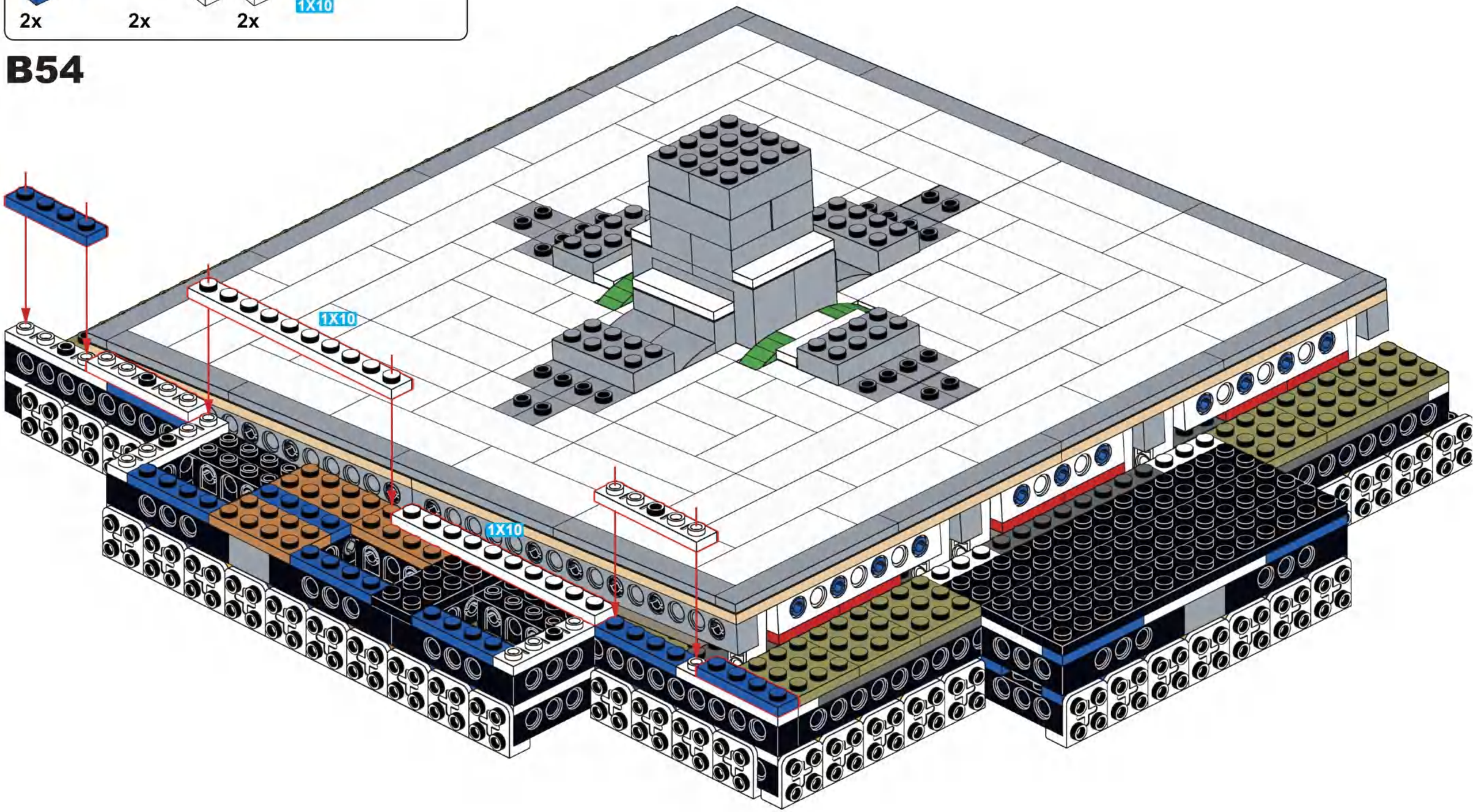

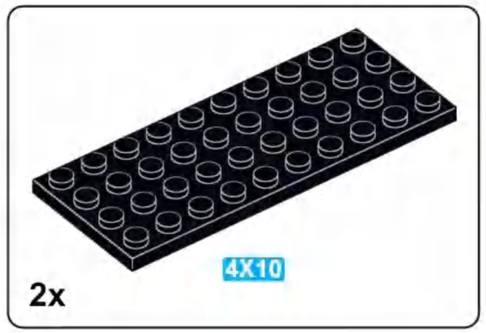

B55

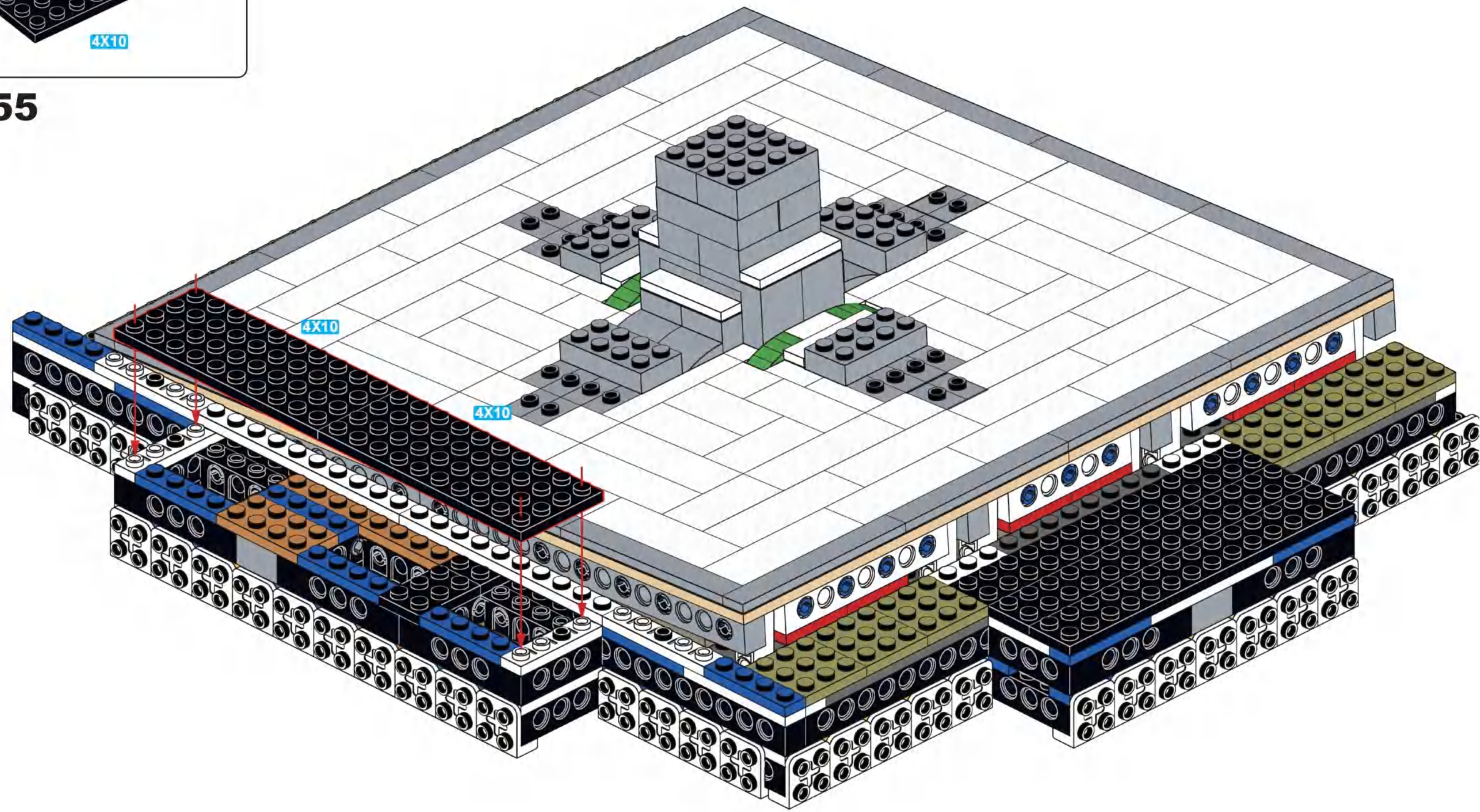

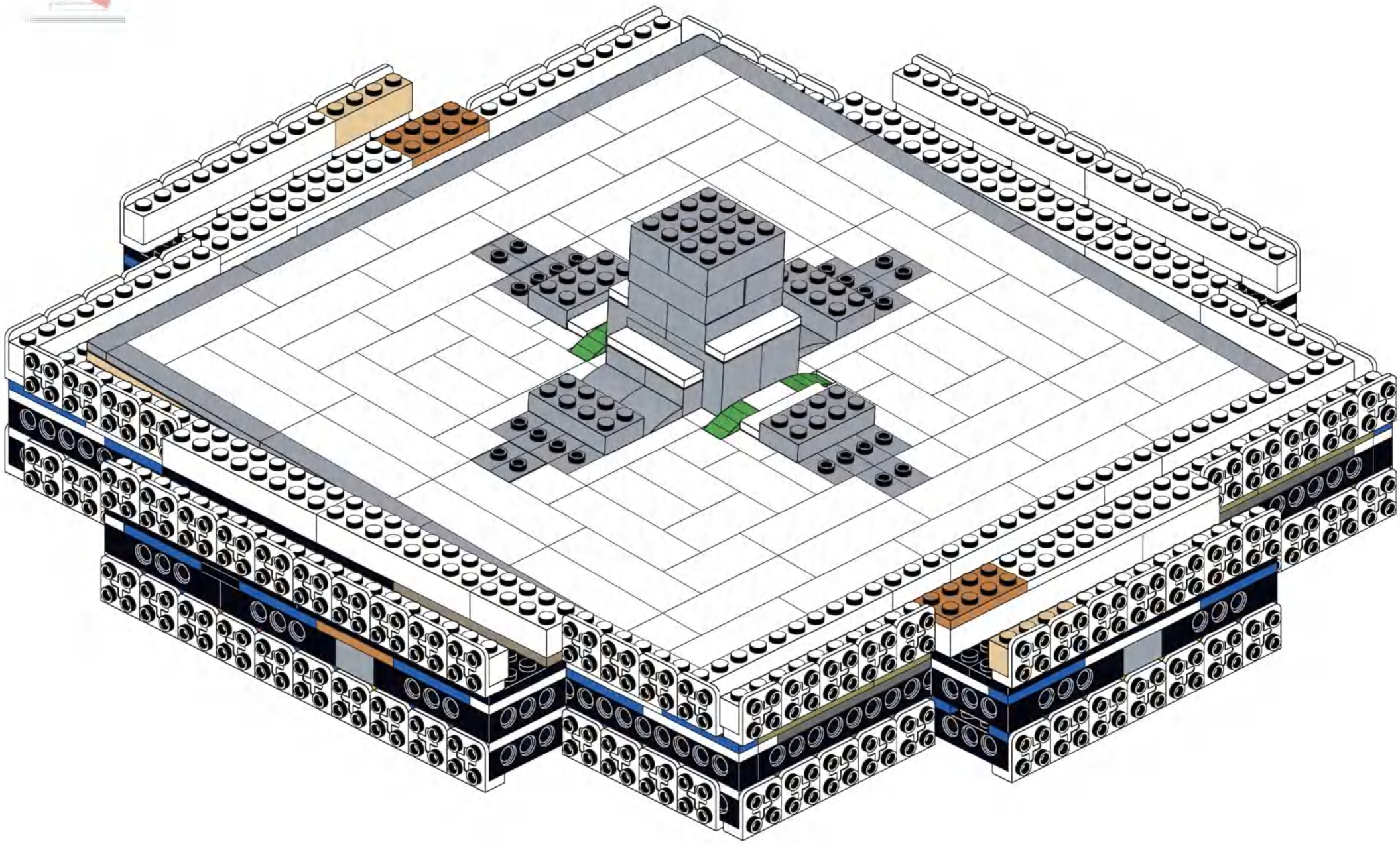
3
C

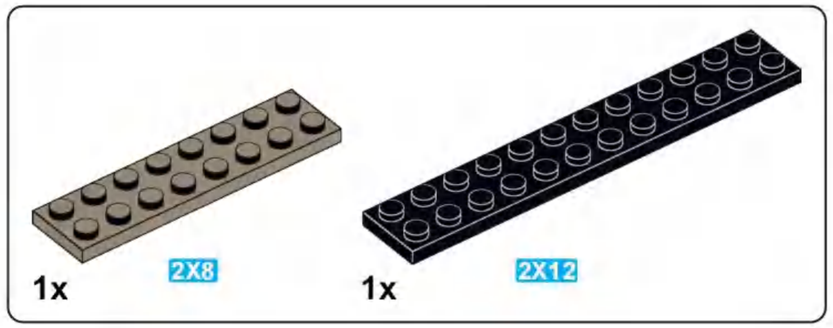

C1

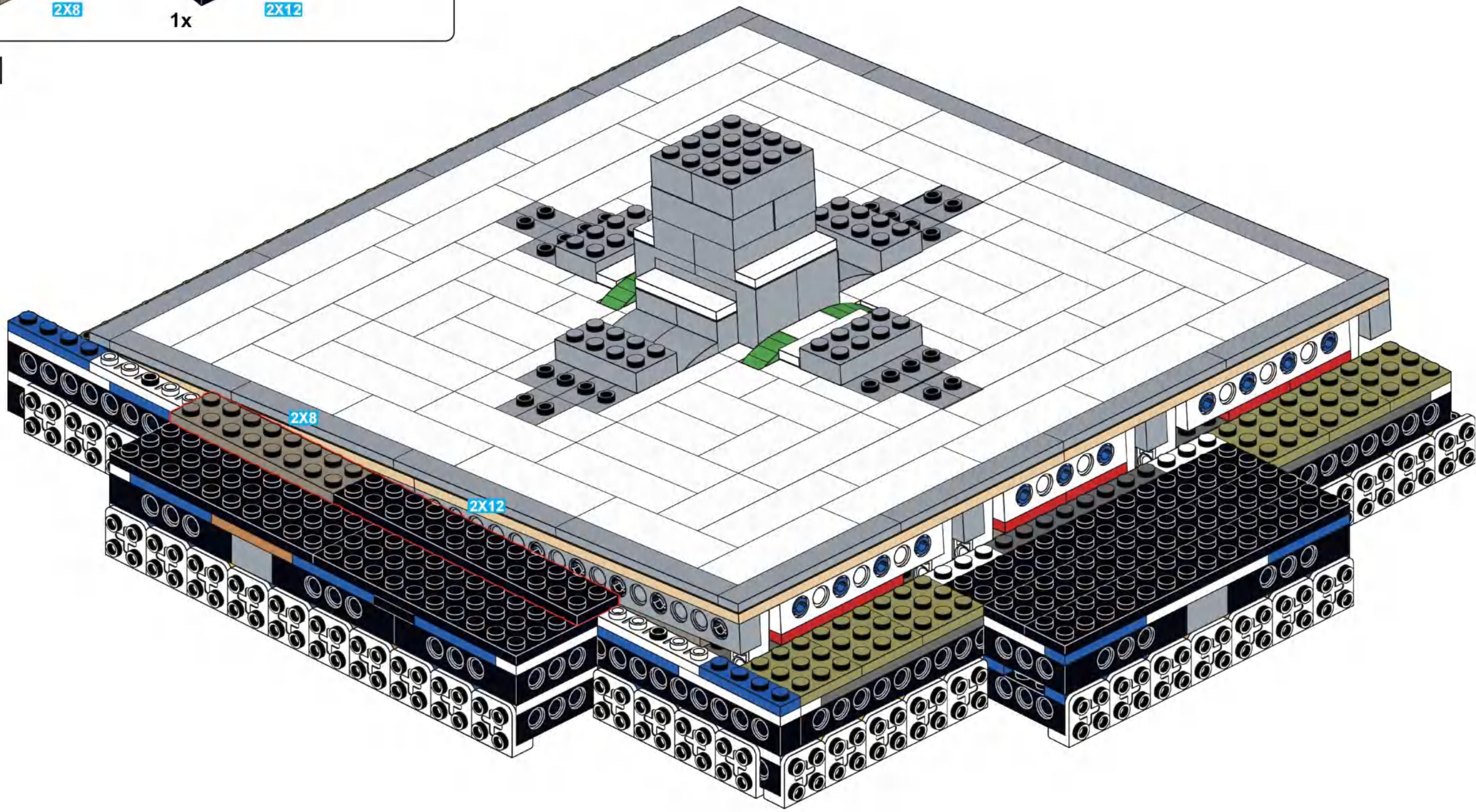

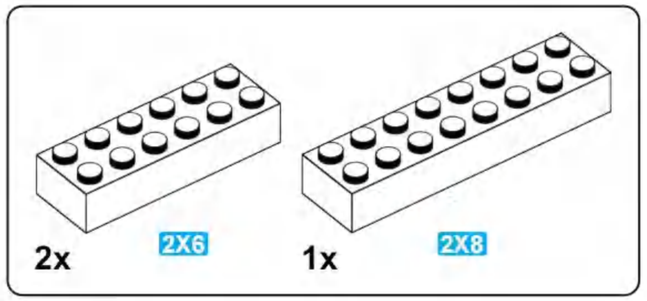

C2

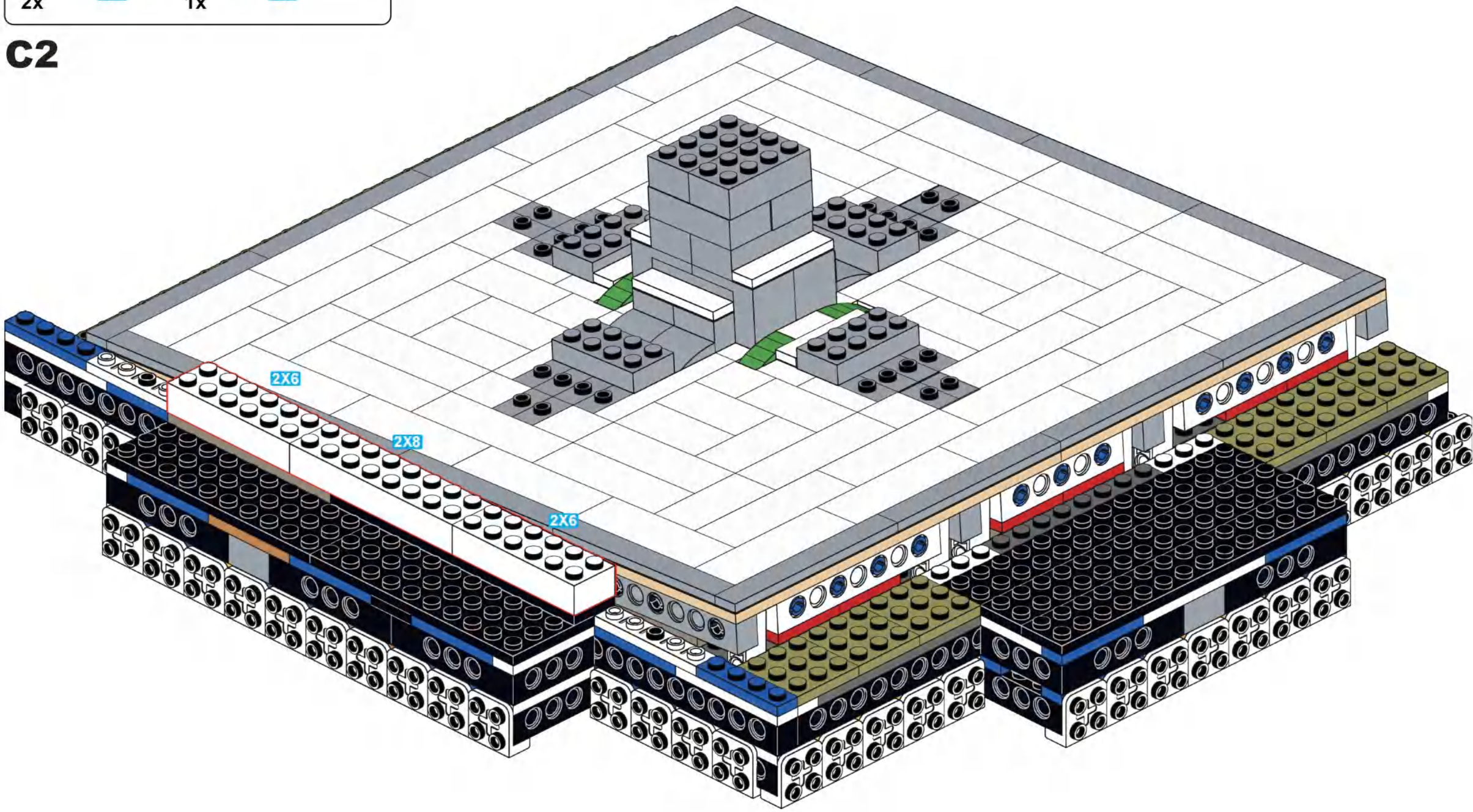

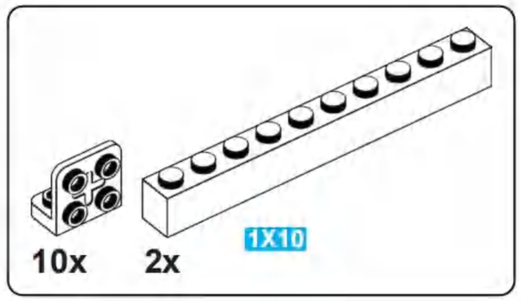

C3

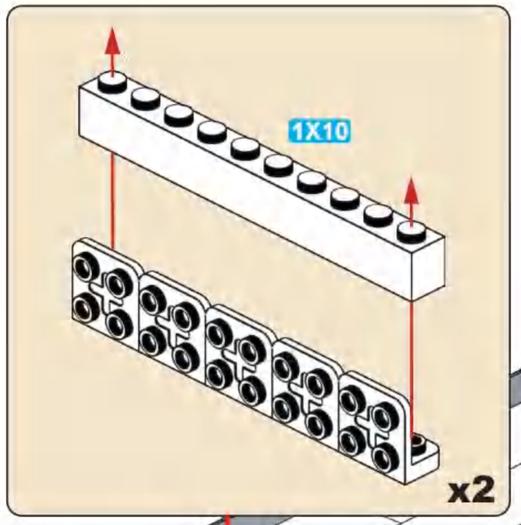

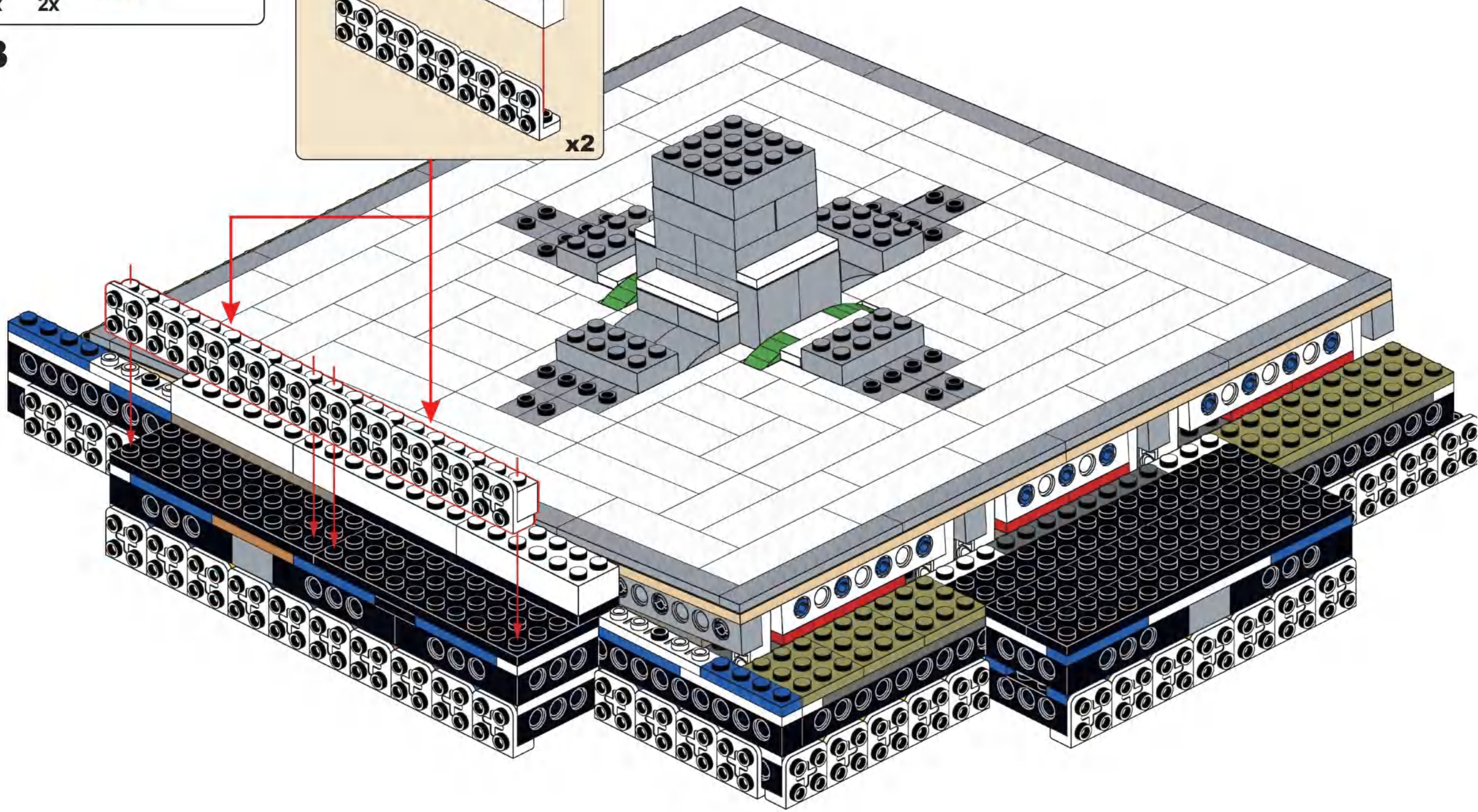

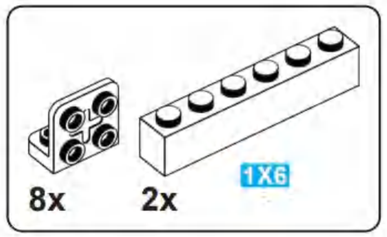

C4

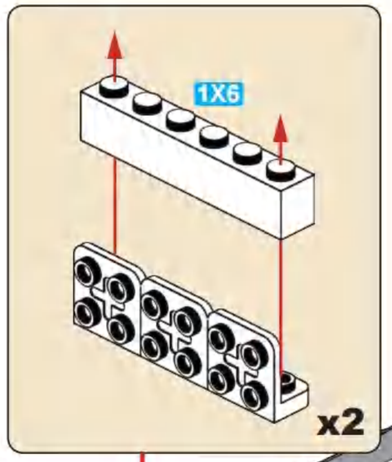

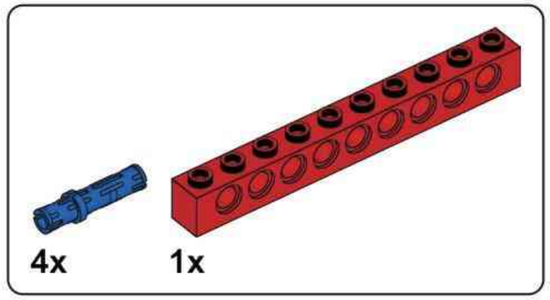

C5

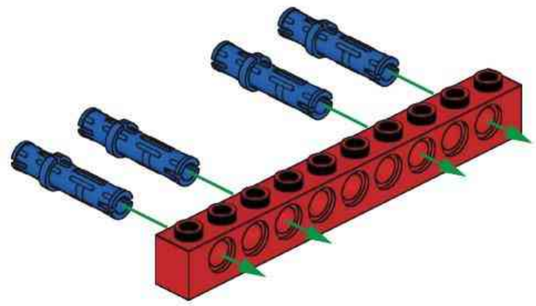

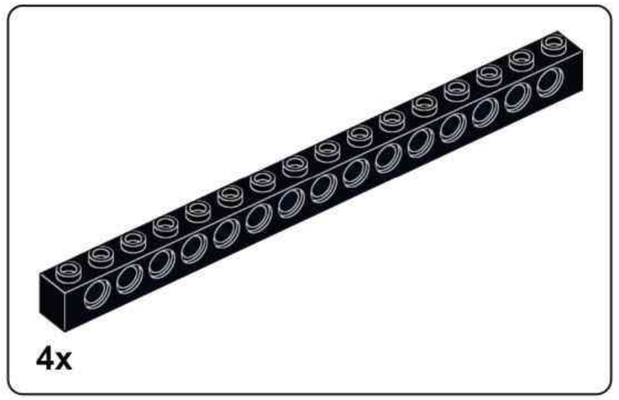

C6

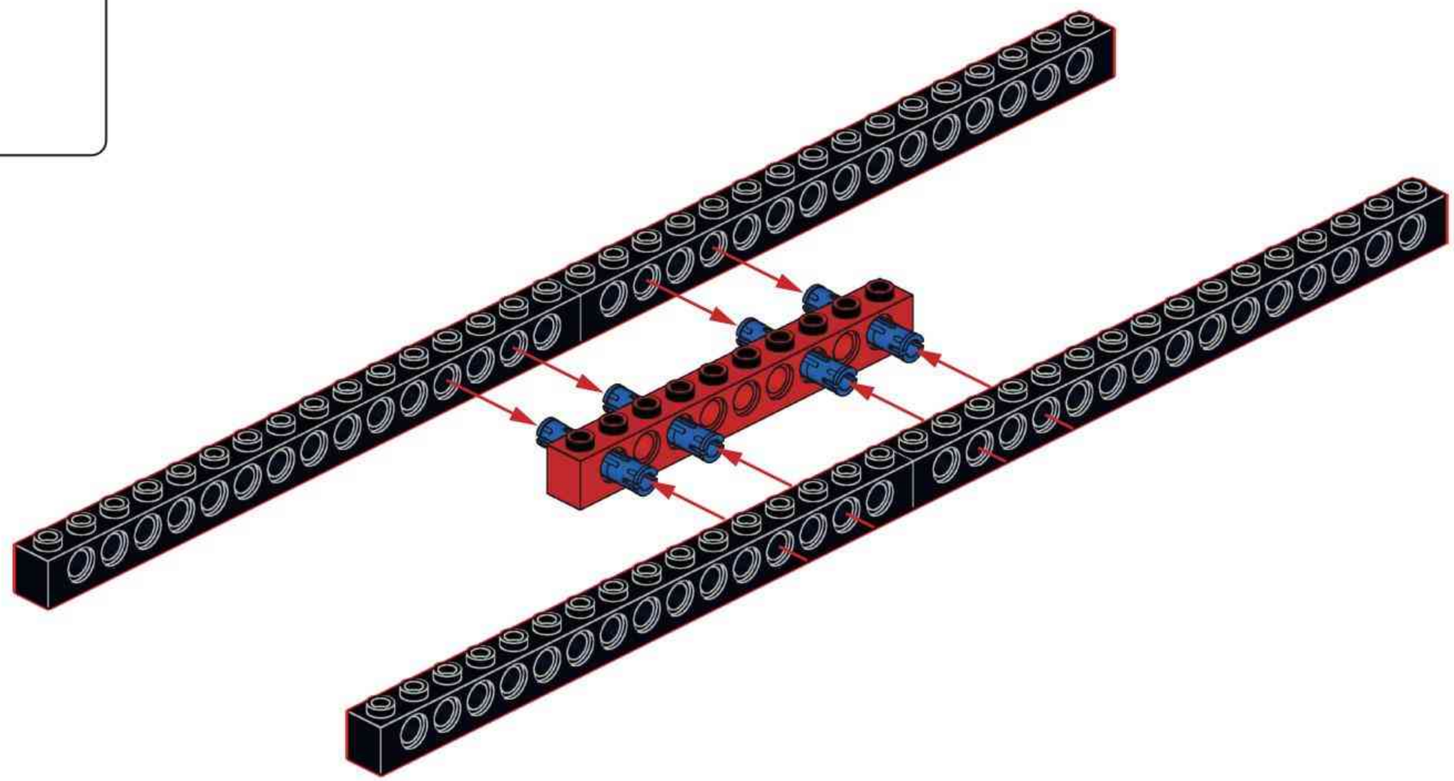

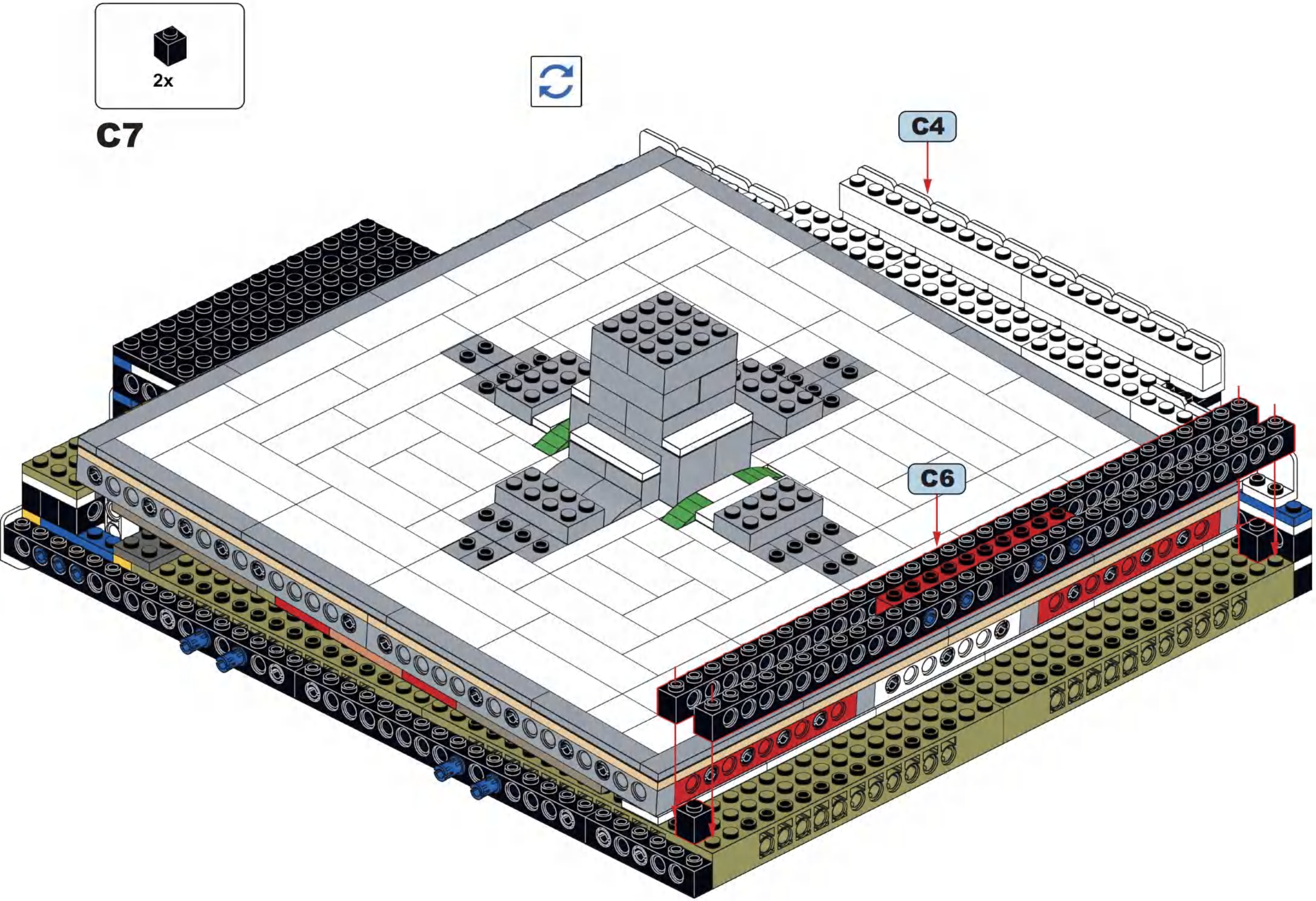
2x
C7
C4
C6

10x

C8

2x 1x

C9

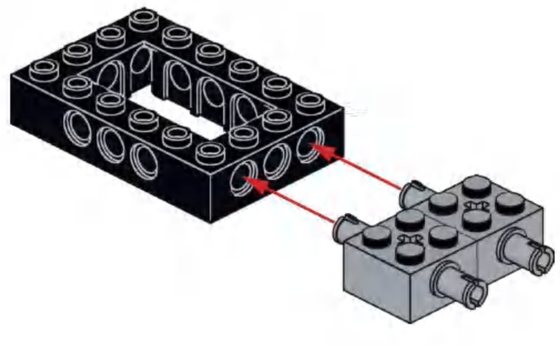

4x 1x

C10

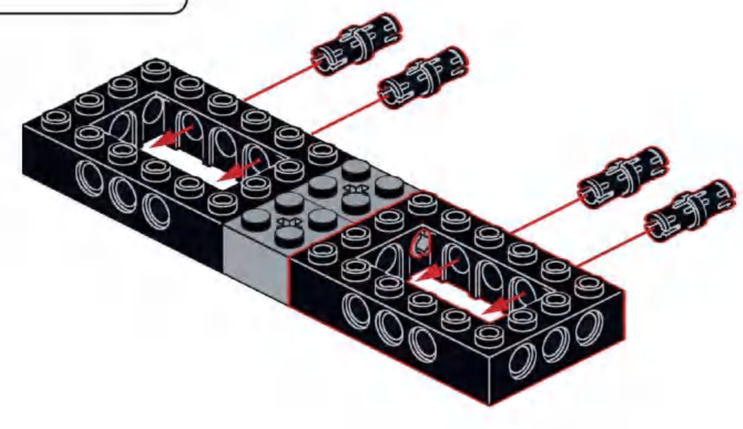

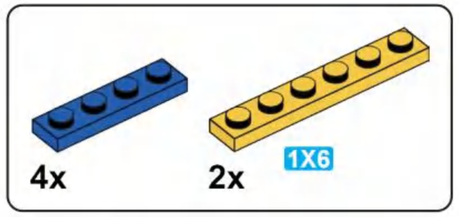

C11

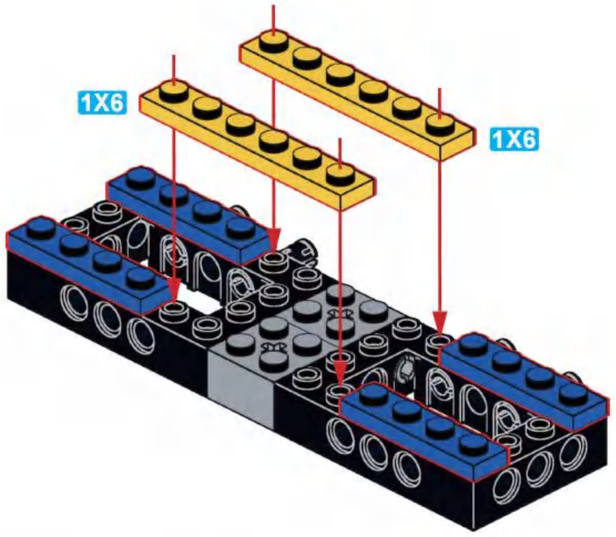

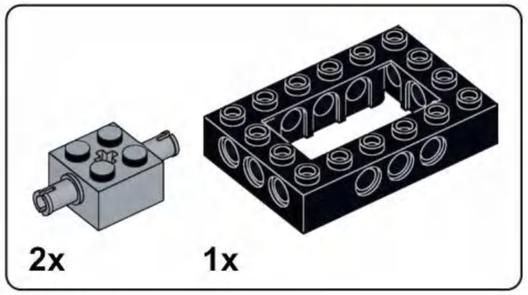

C12

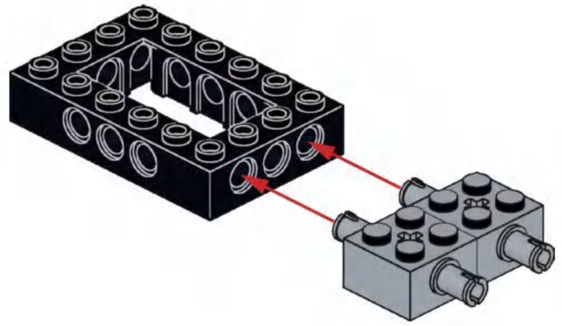

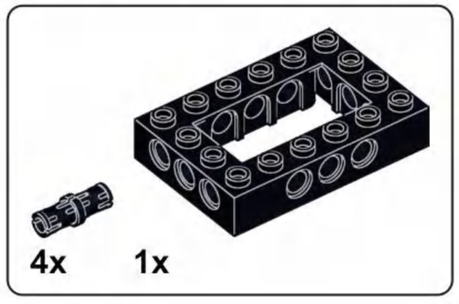

C13

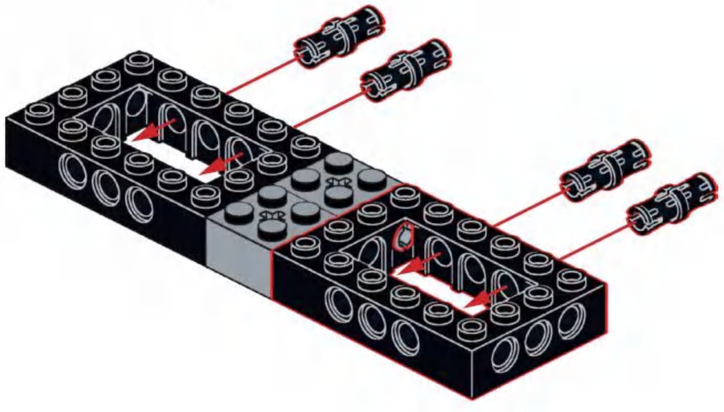

C14

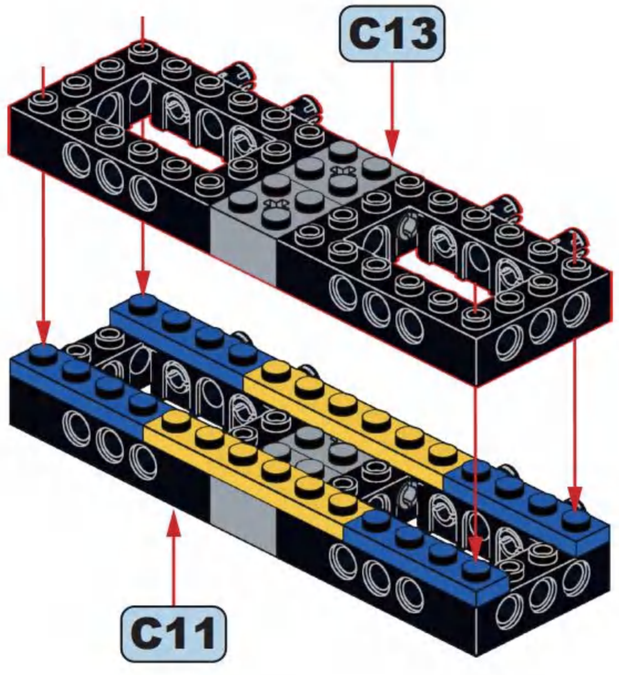

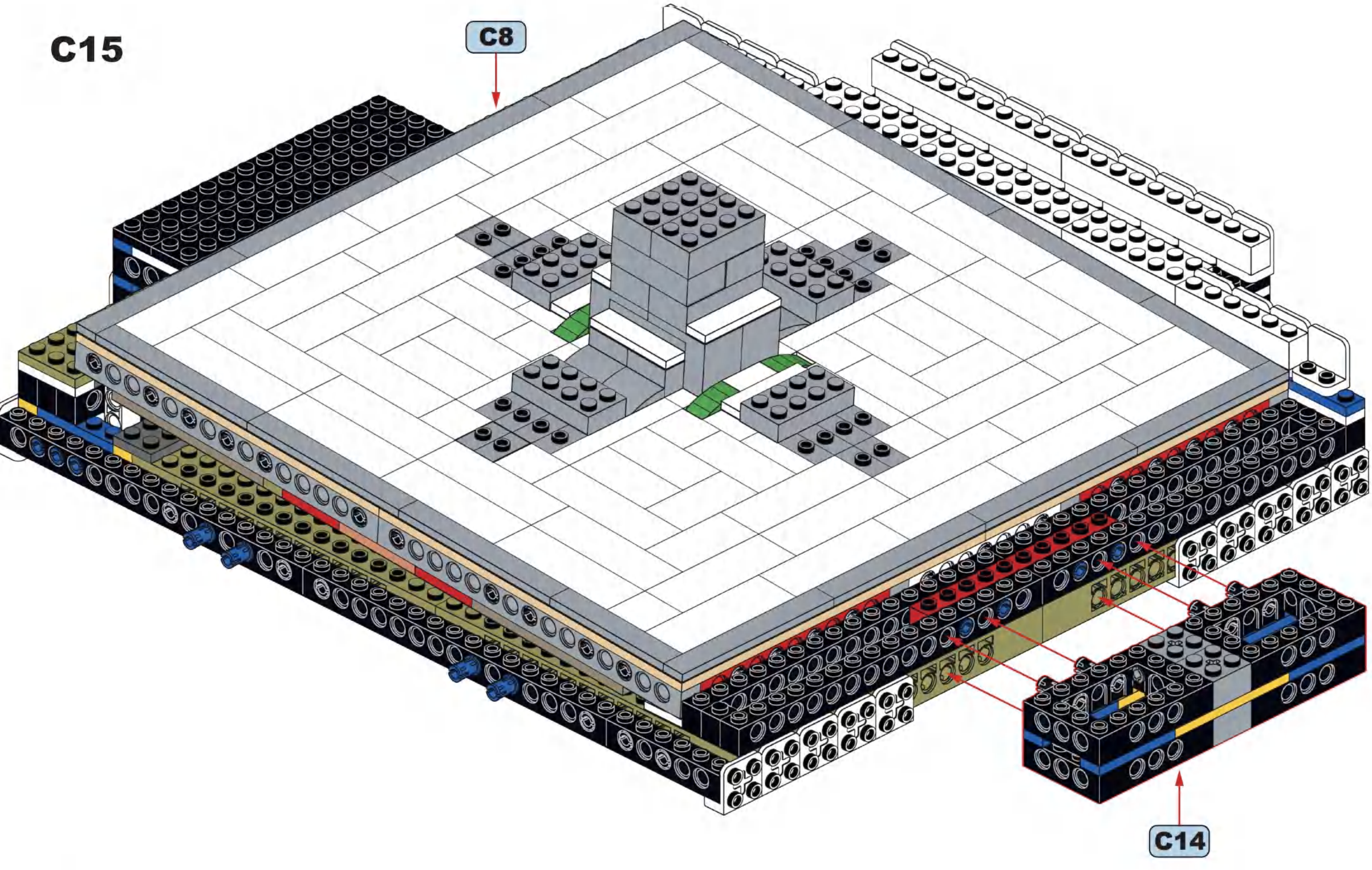
C15
C8
C14

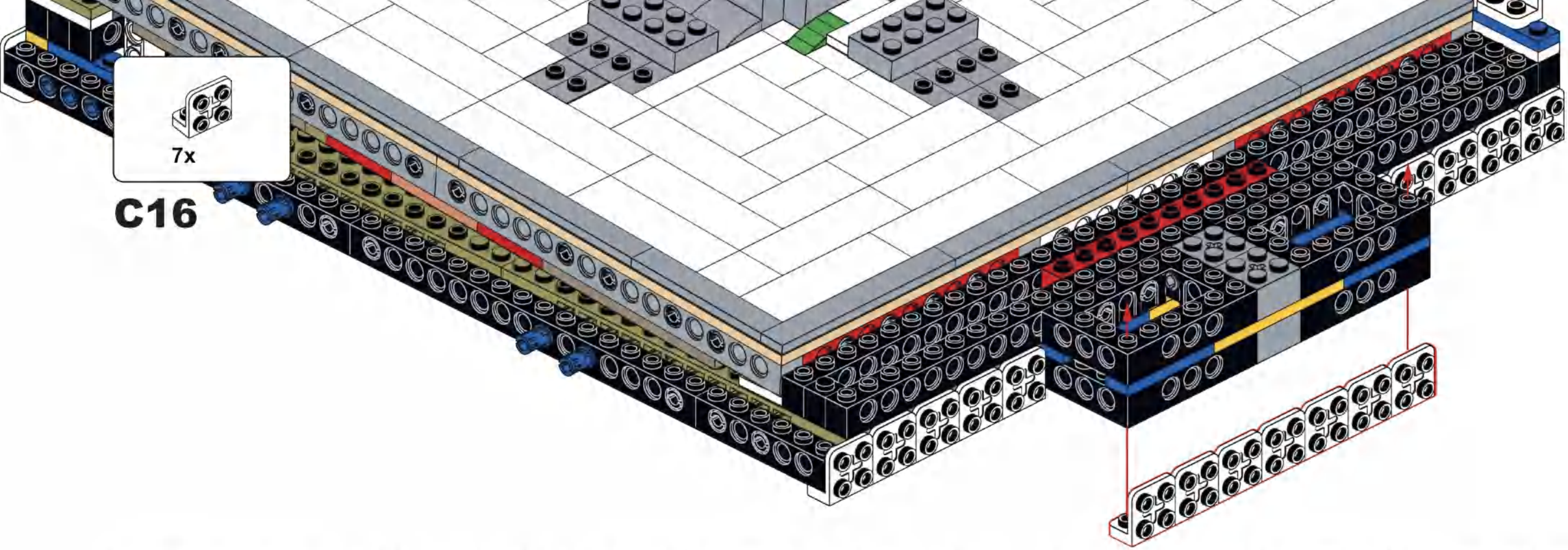
7x
C16

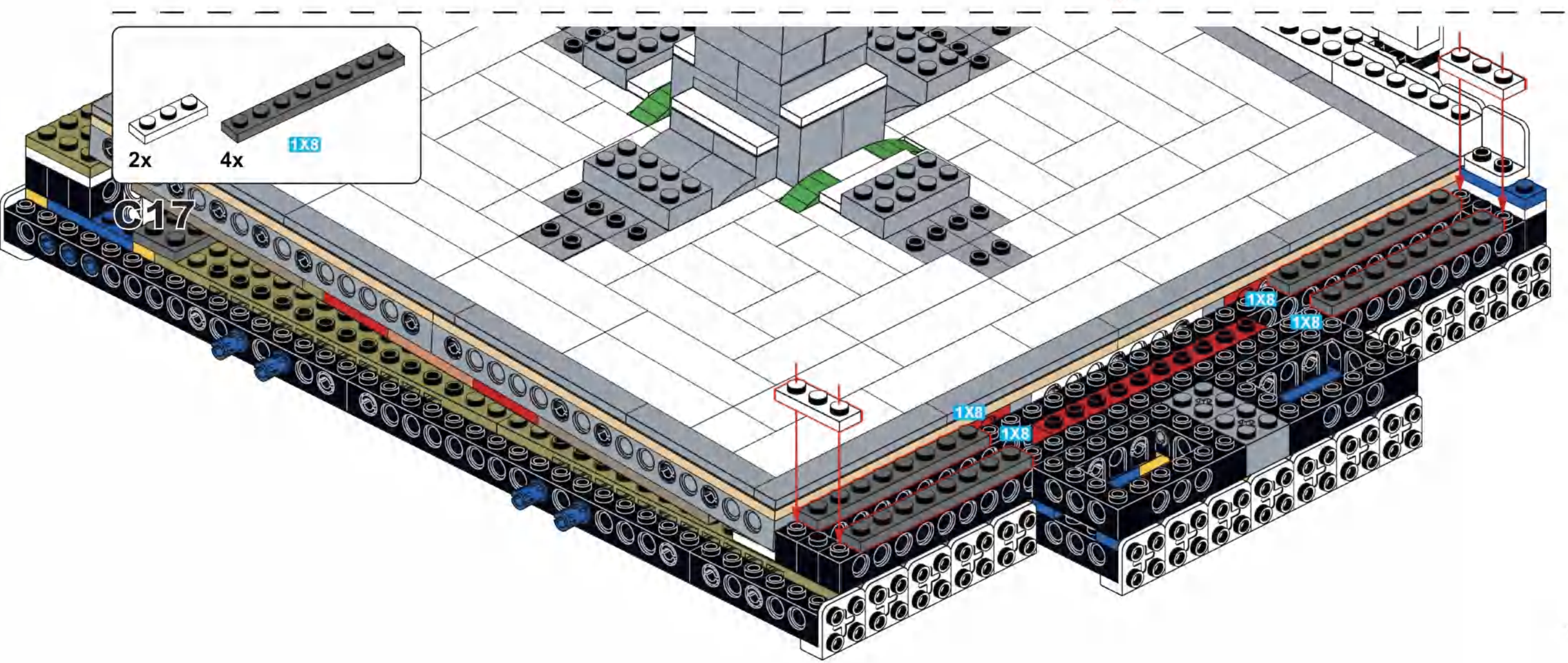
2x
4x
1X8
C17
1X8
1X8
1X8
1X8

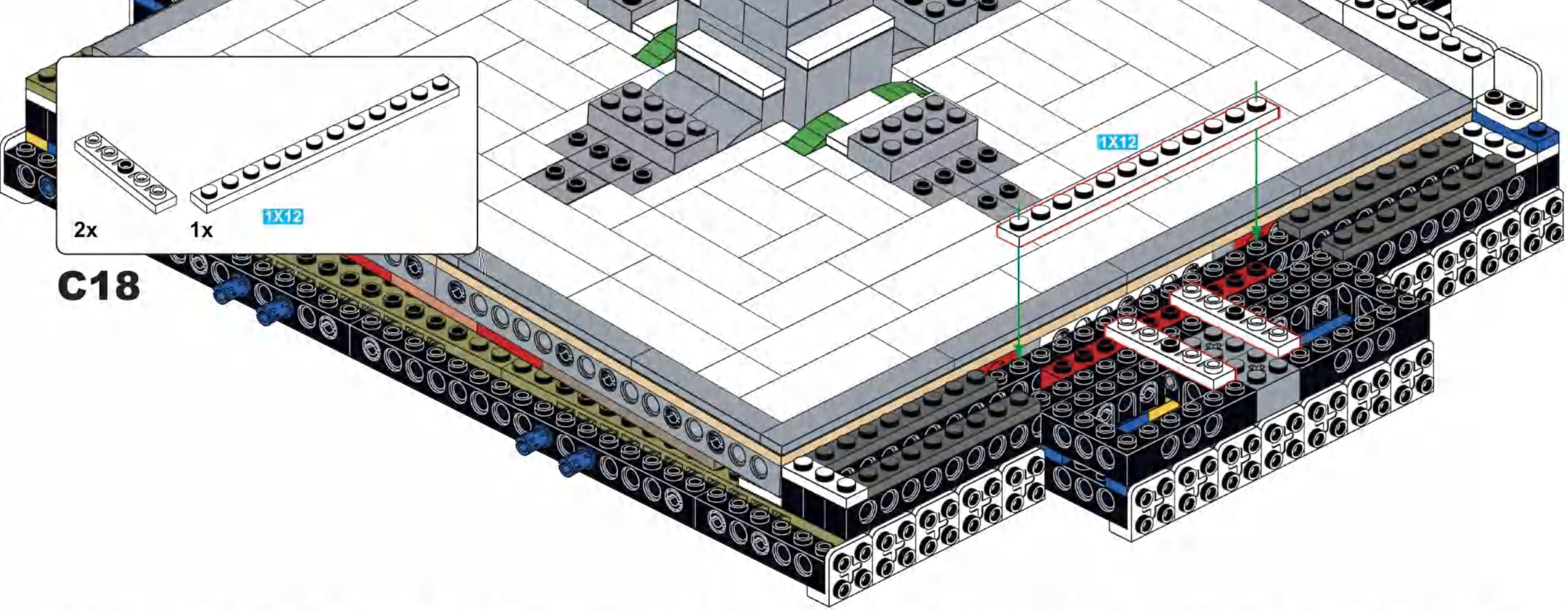

C18

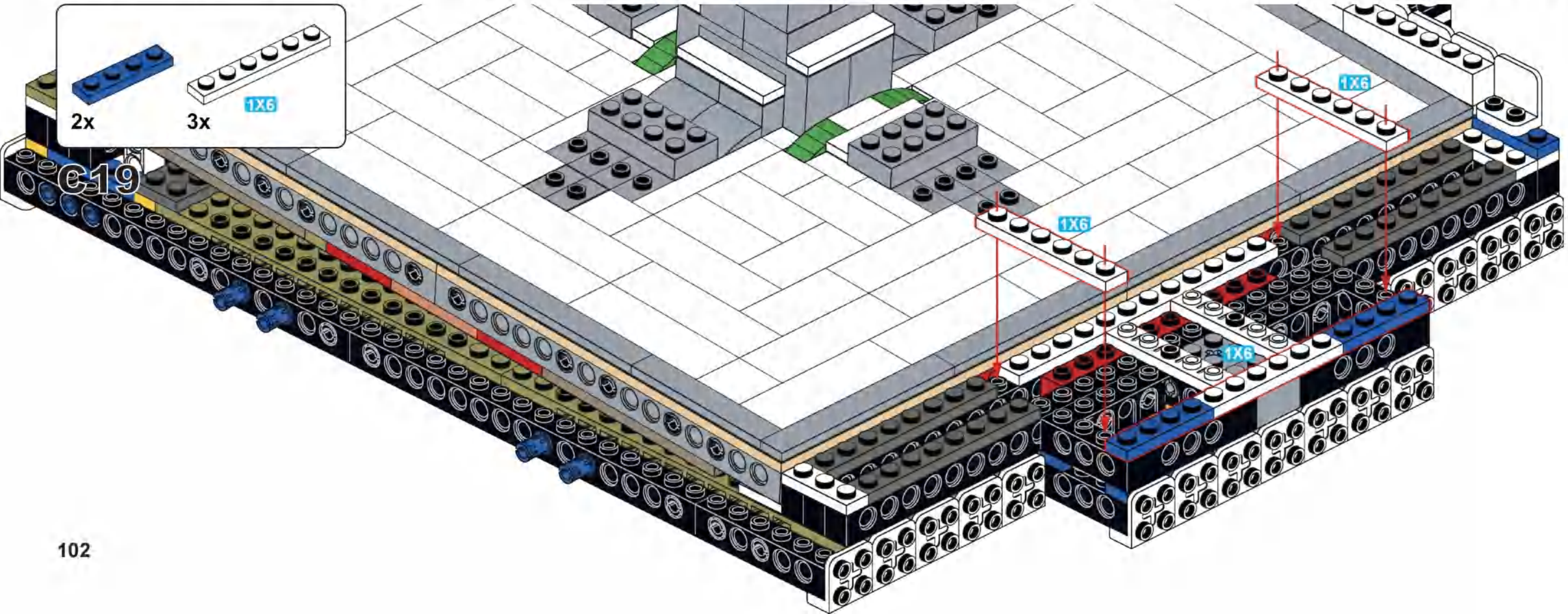

C19

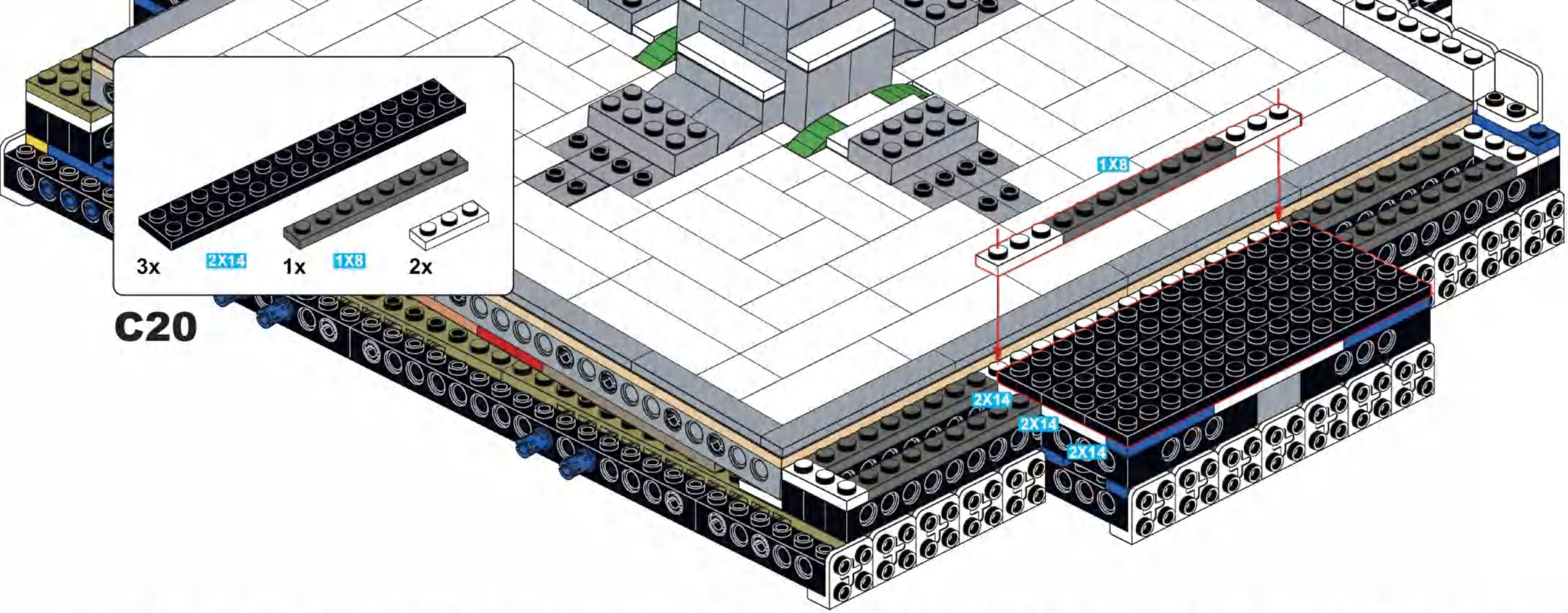
3x
2X14
1x
1X8
2x
C20
1X8
2X14
2X14
2X14

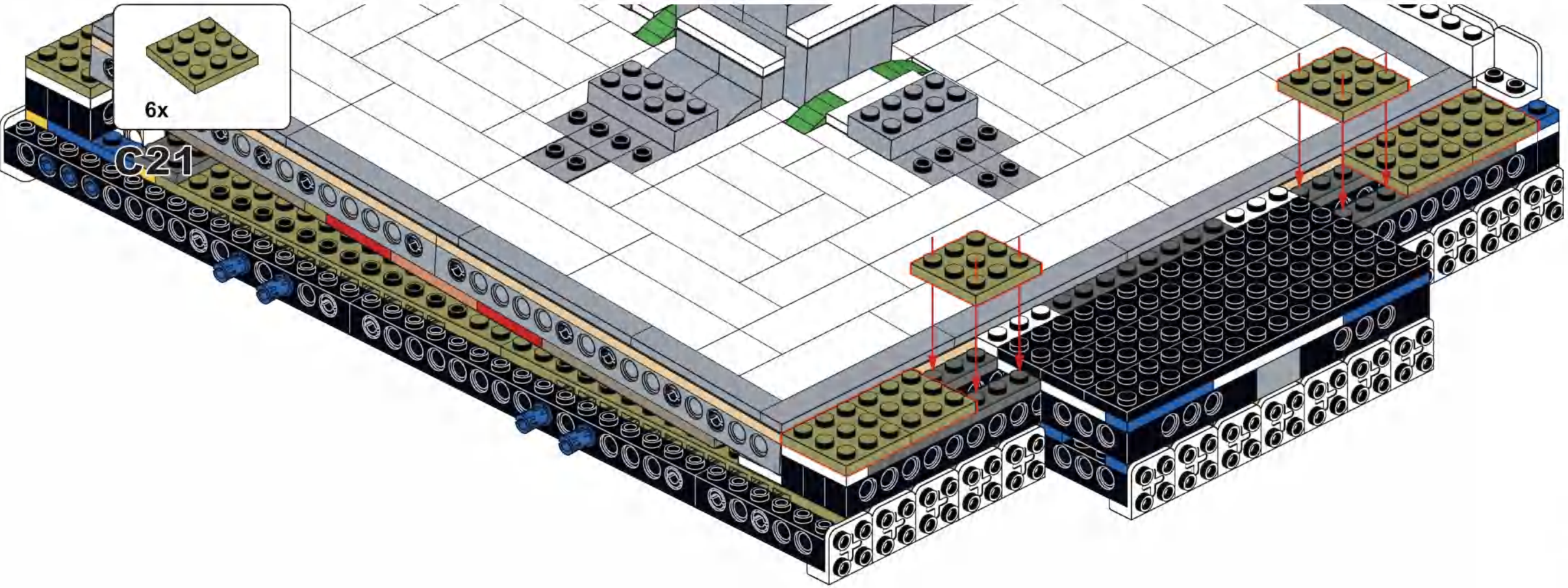
6x
C21

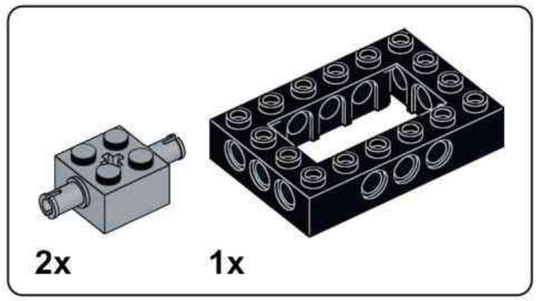

C22

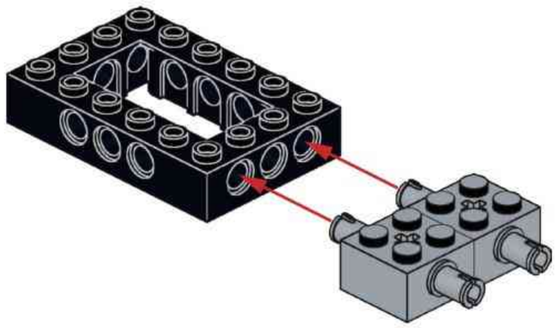

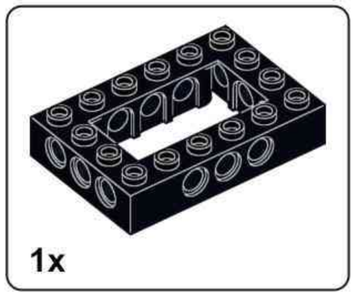

C23

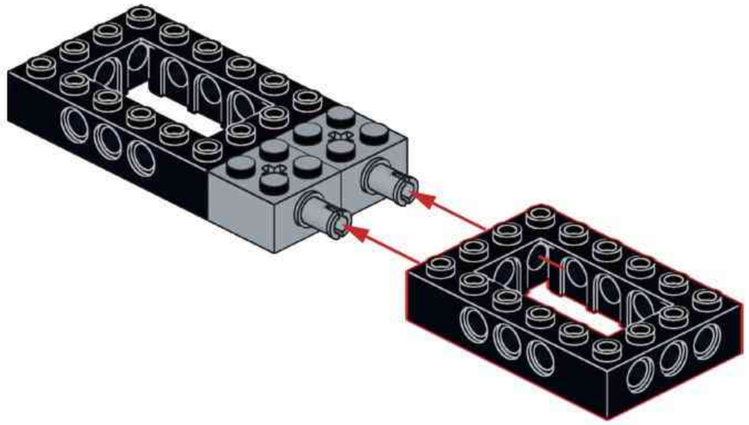

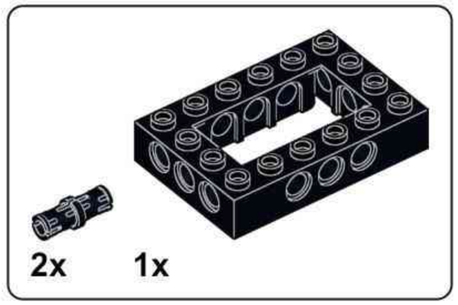

C24

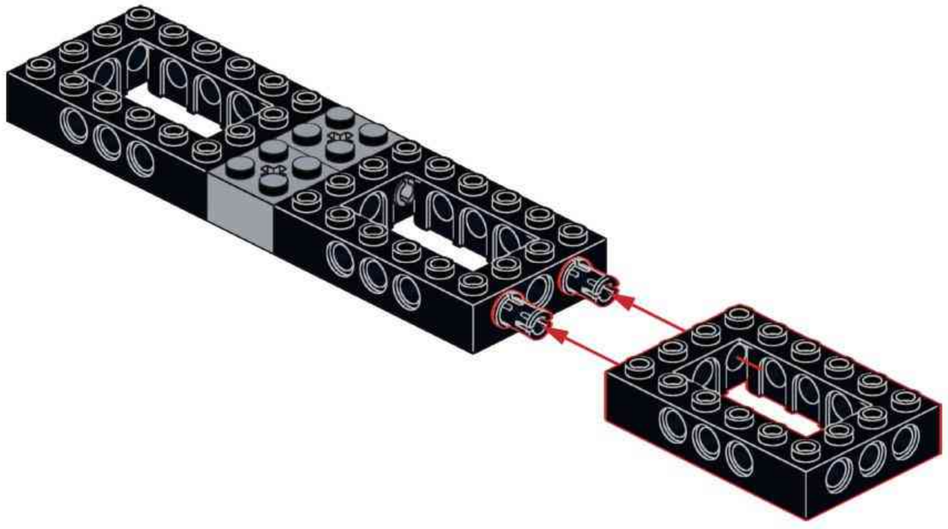

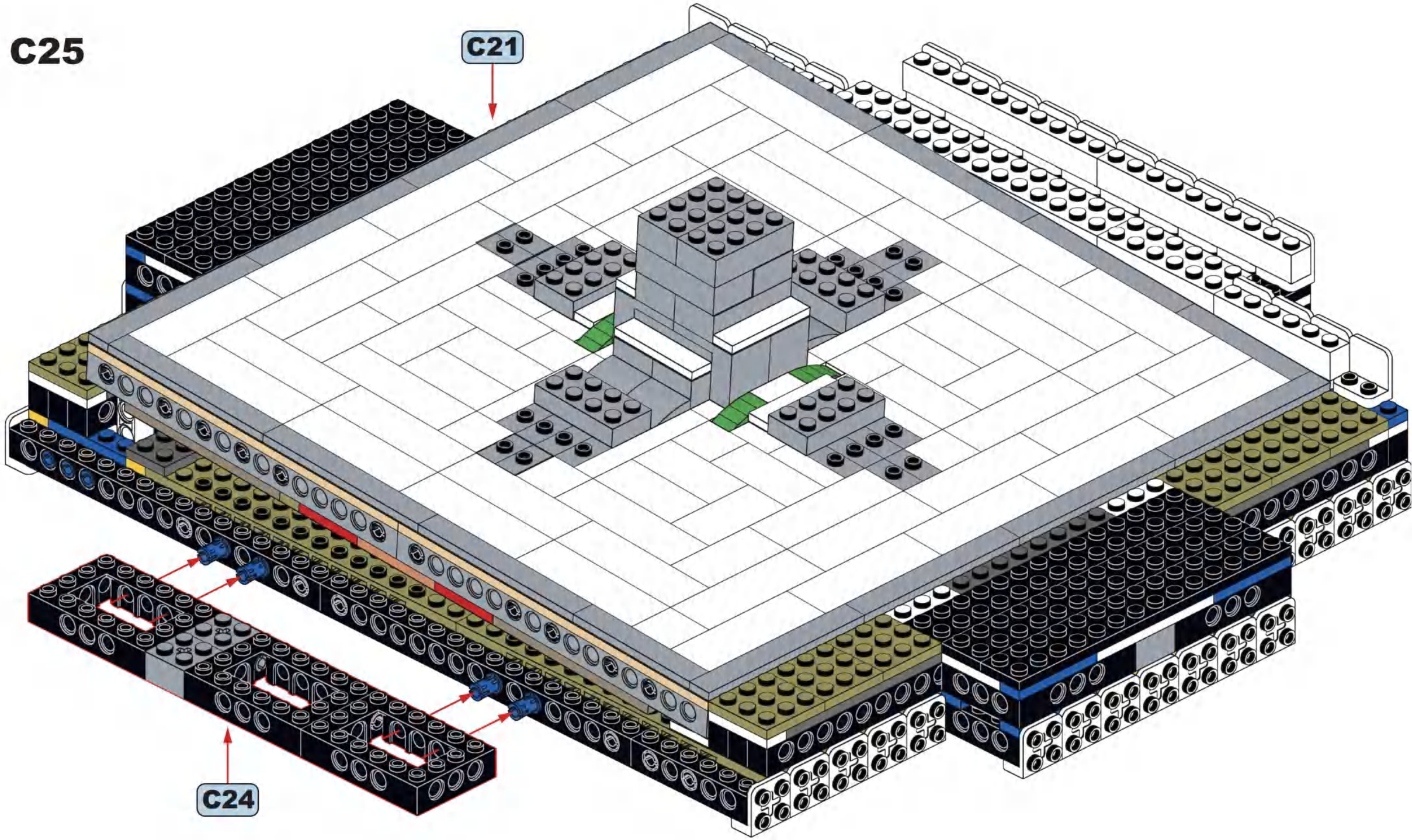
C25
C21
C24

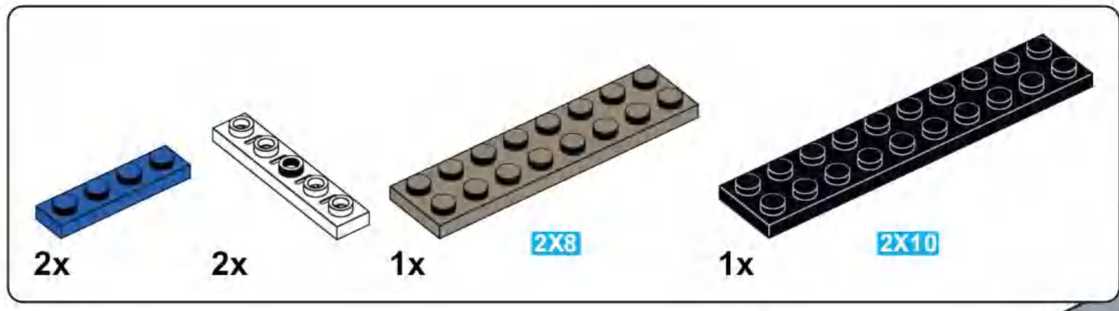

C26

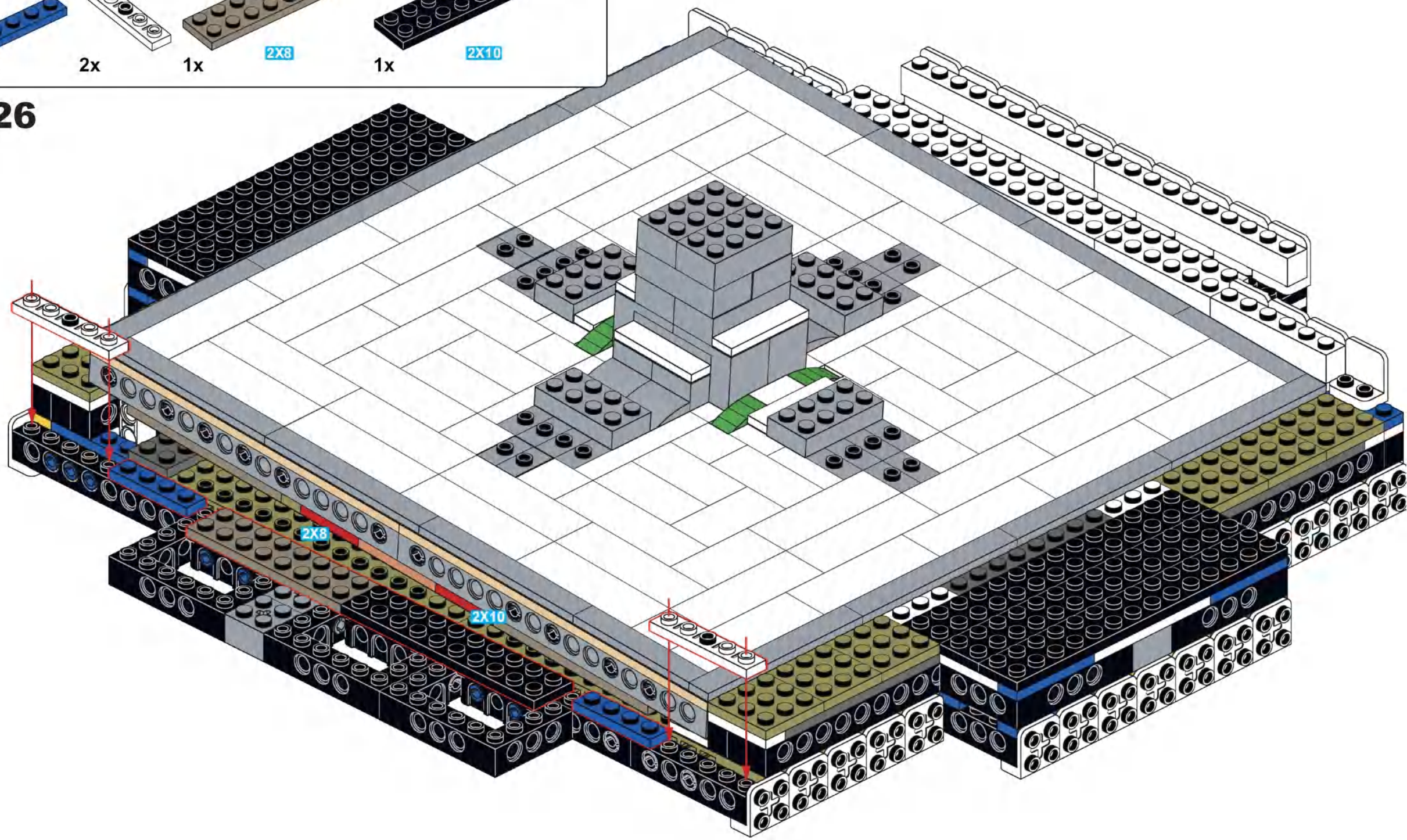

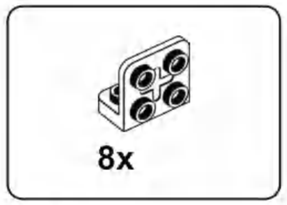

C27

C28

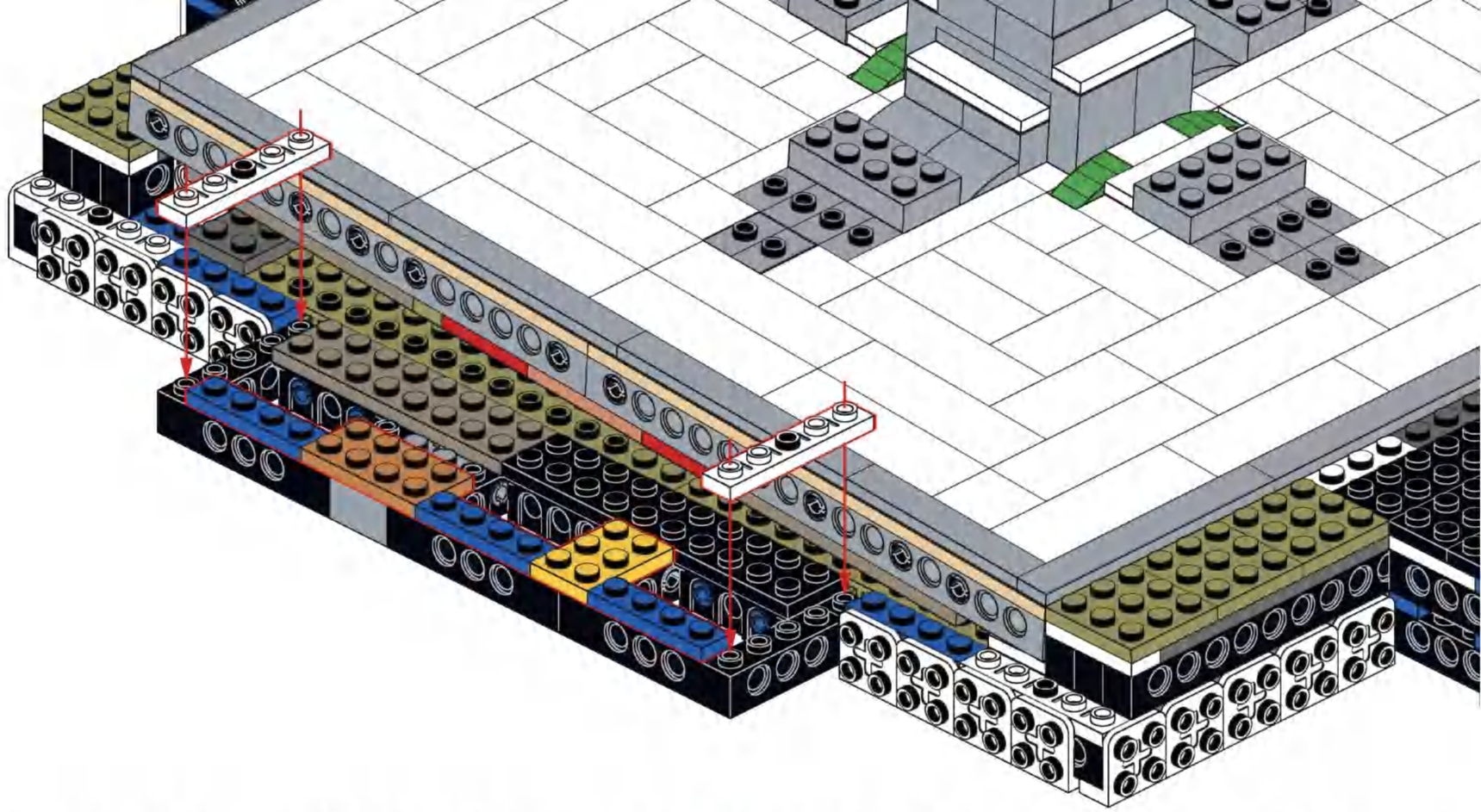
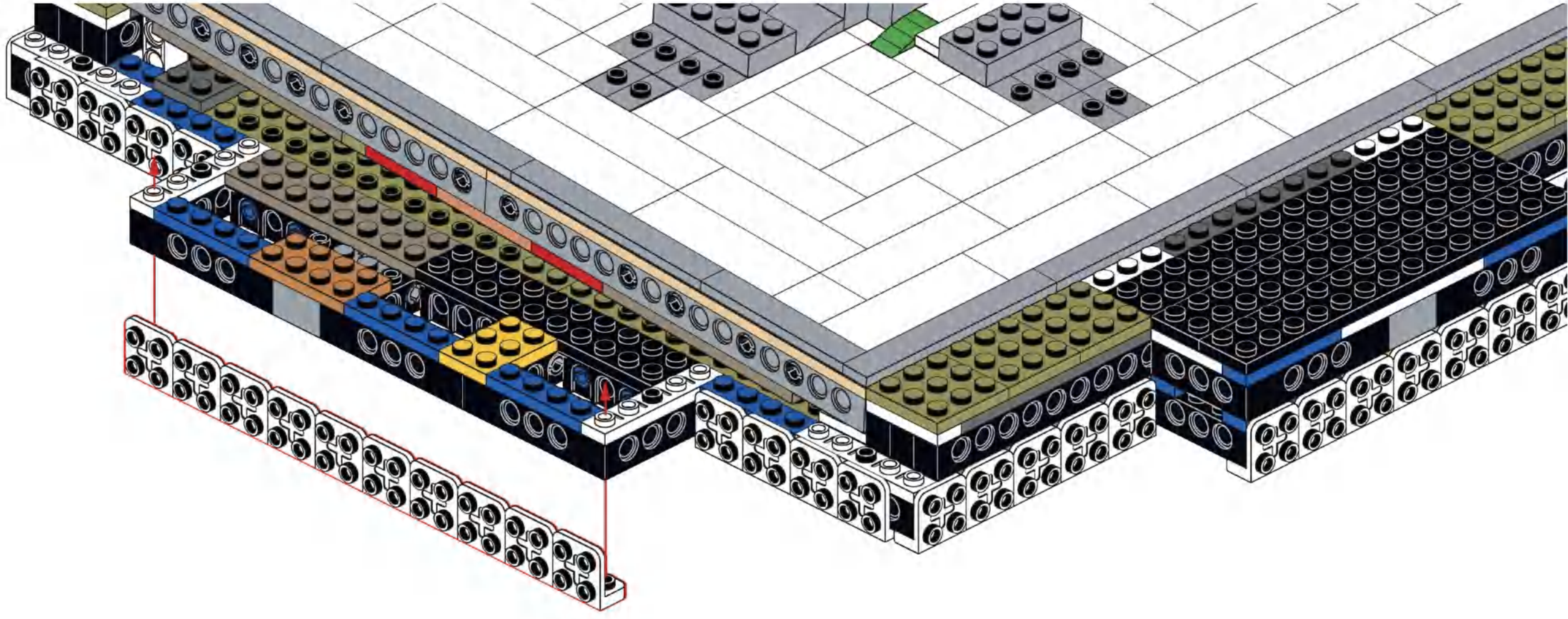
C29