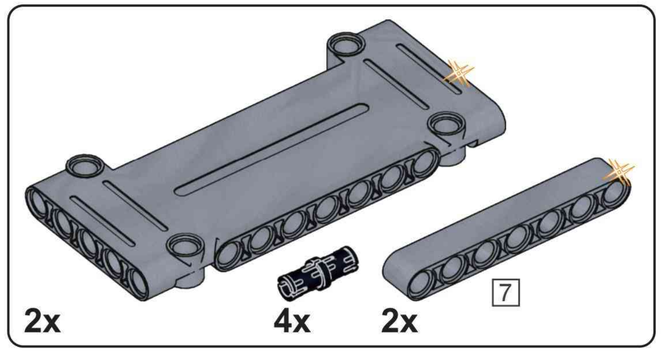

M1

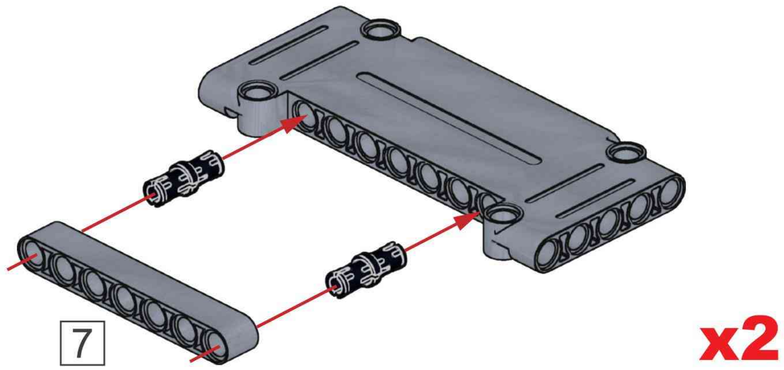

x2

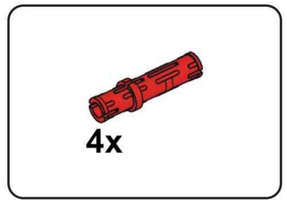

M2

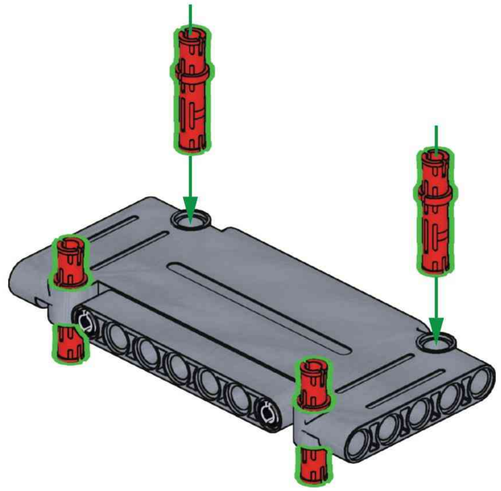

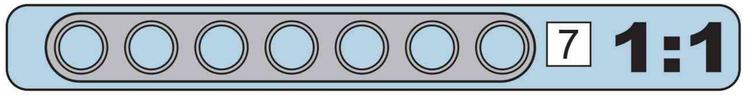

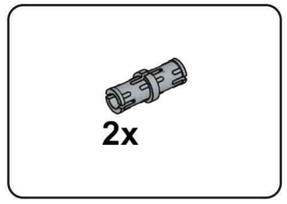

M3

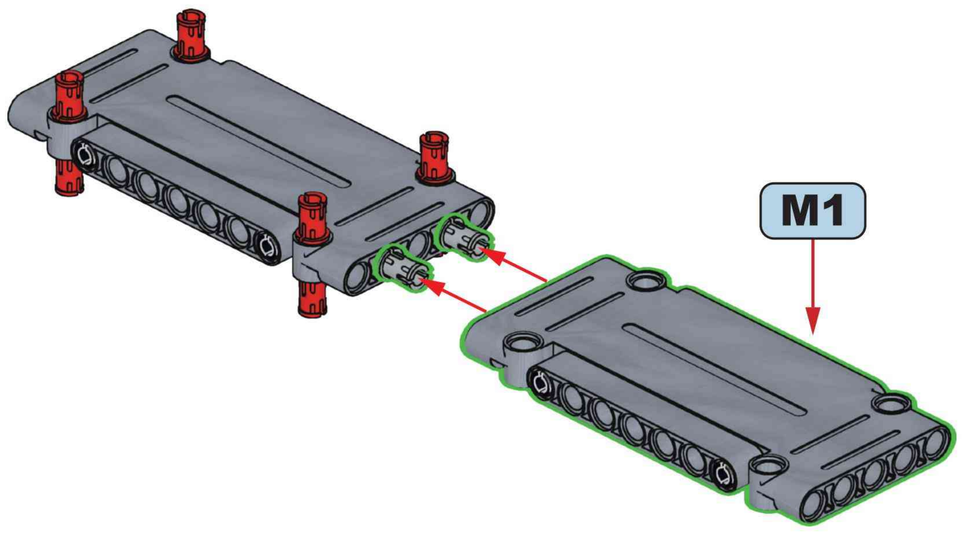

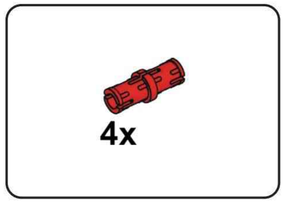

M4

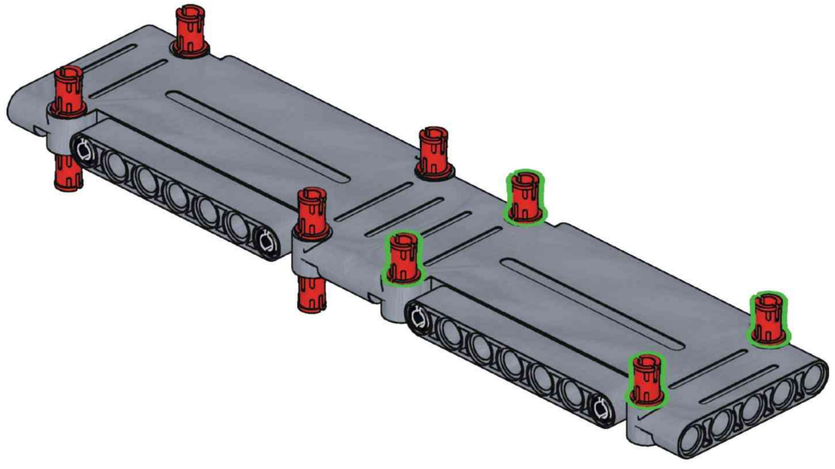

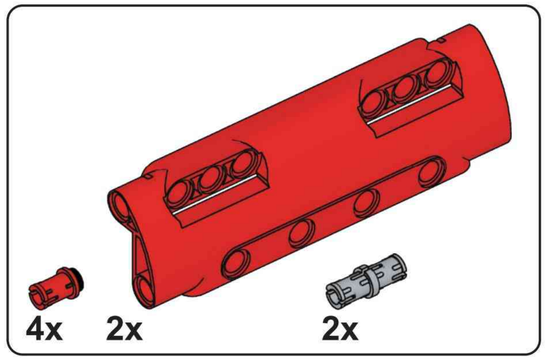

M5

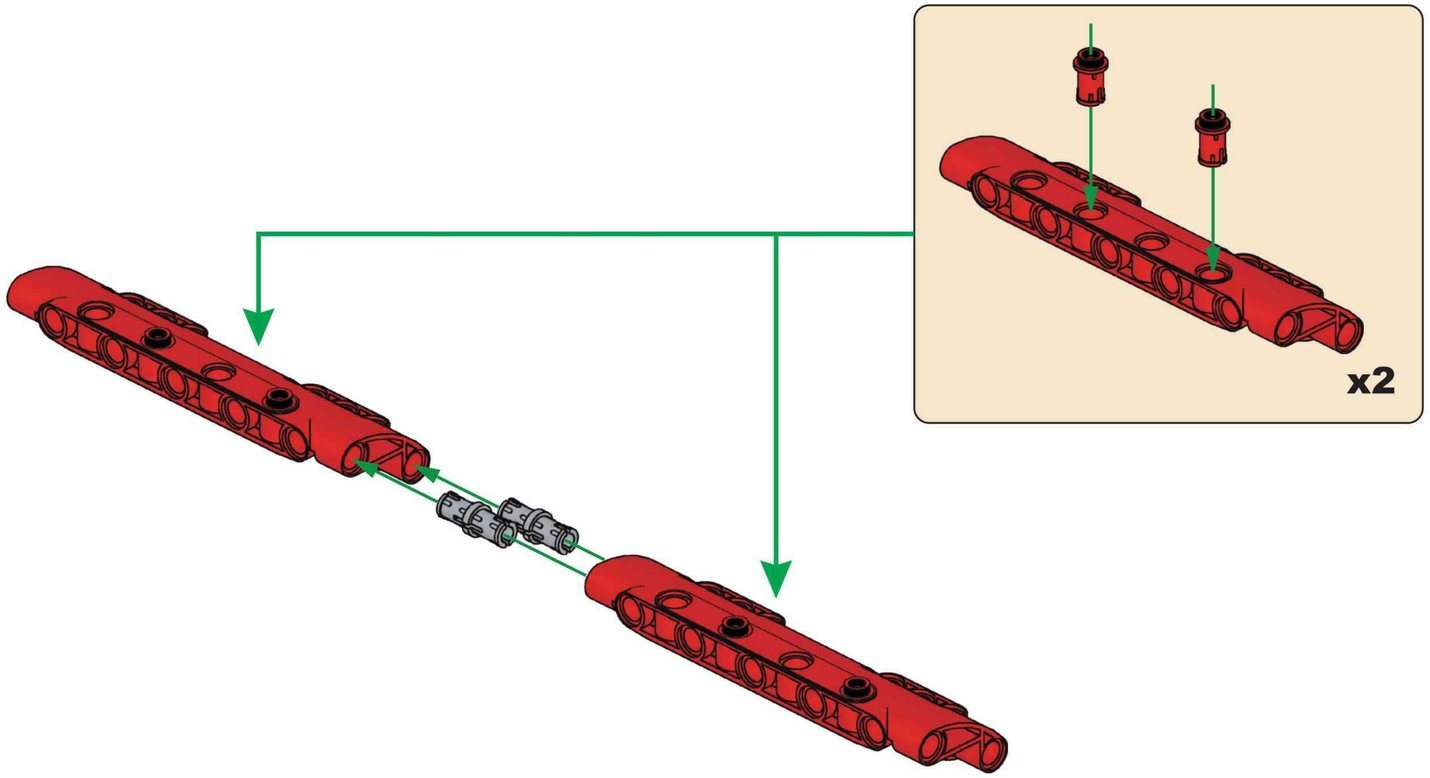

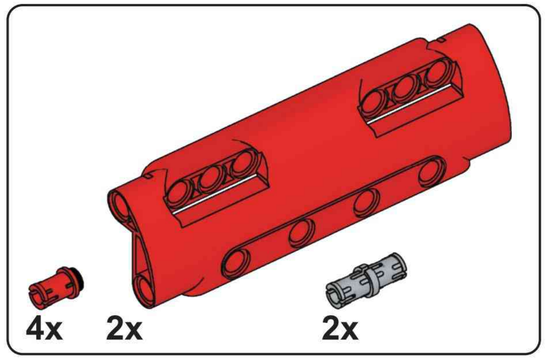

M6

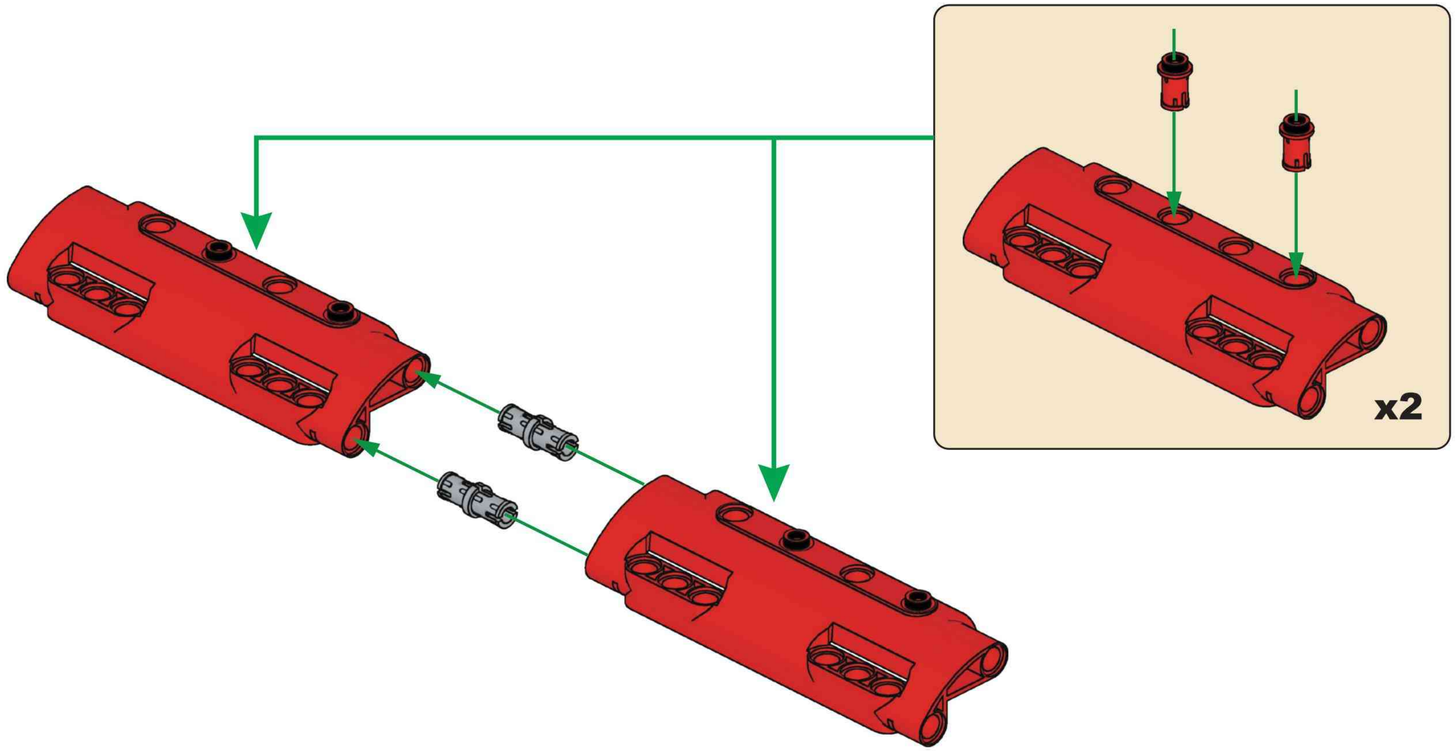

M7

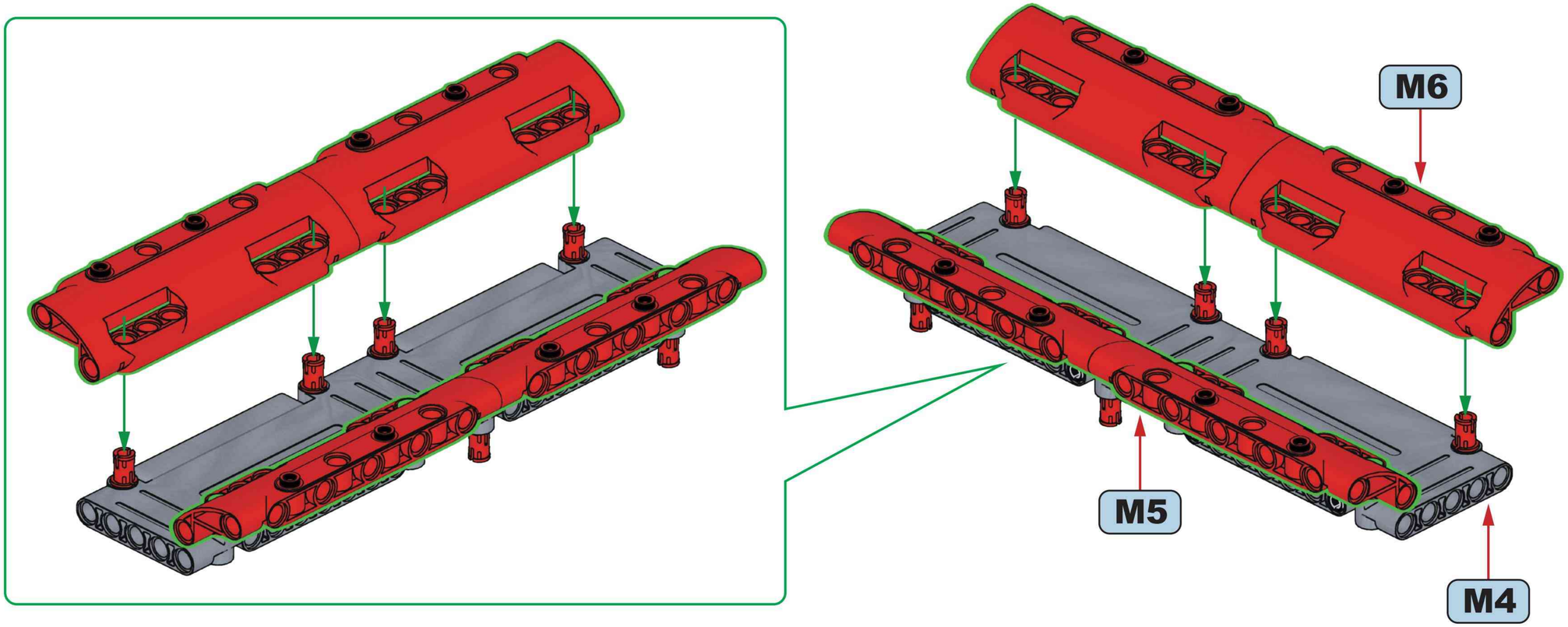

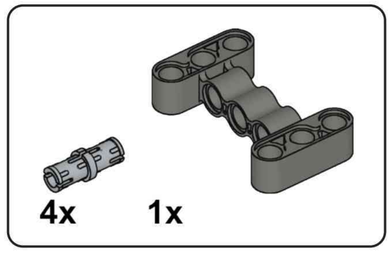

M8

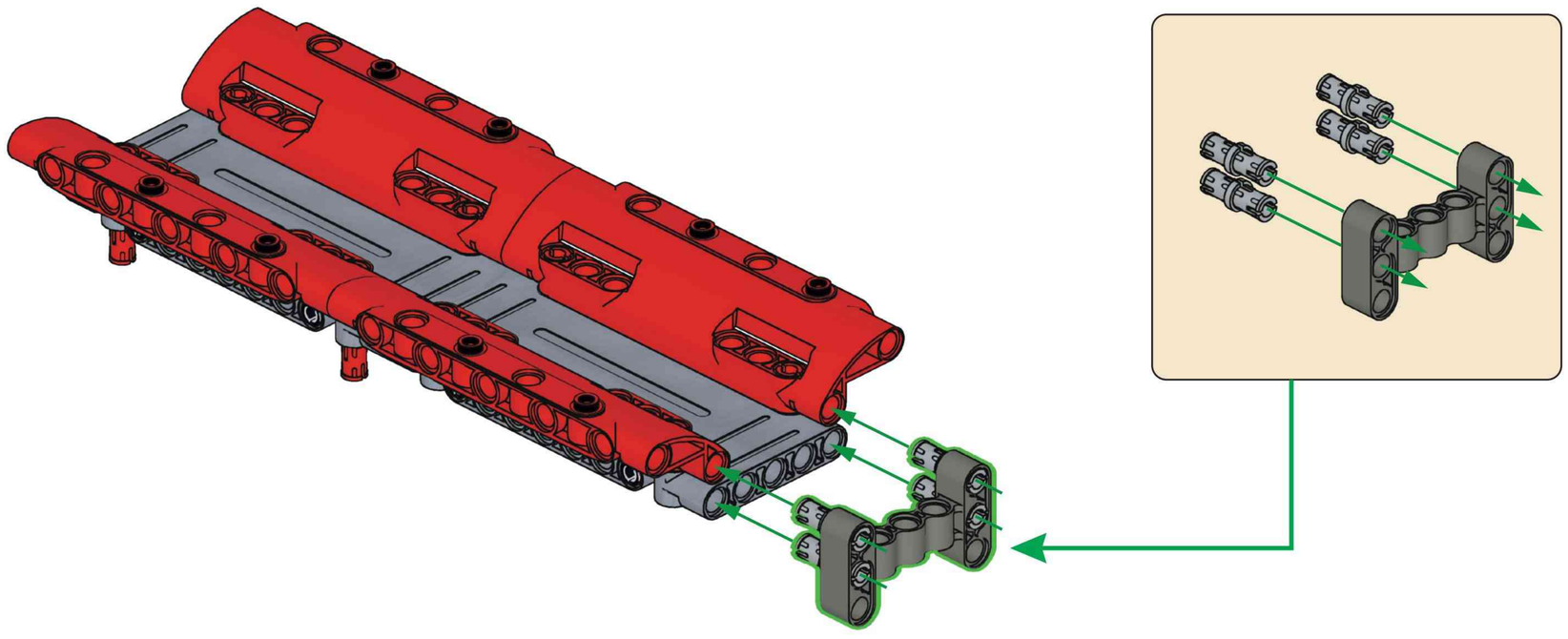

M9

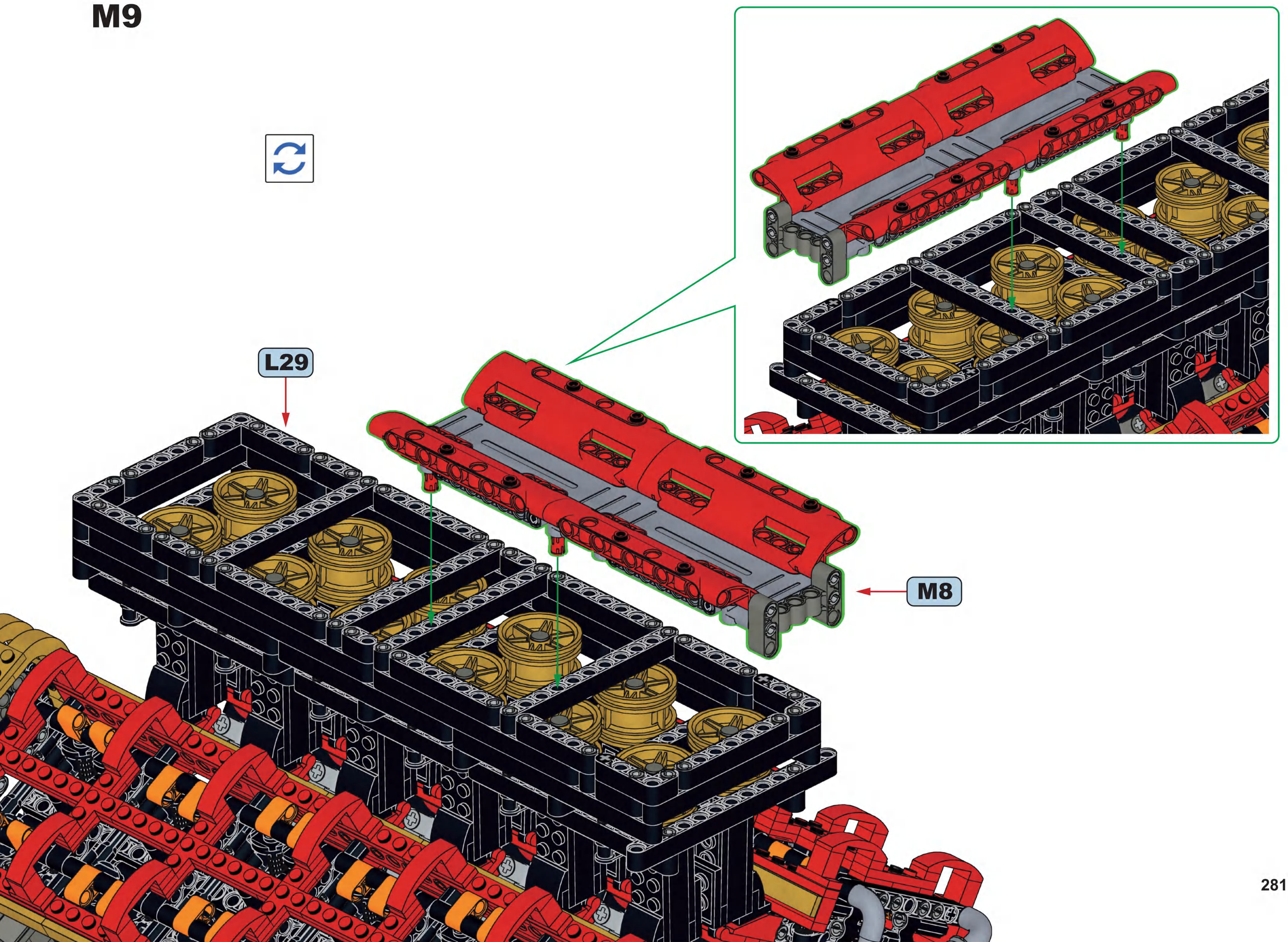

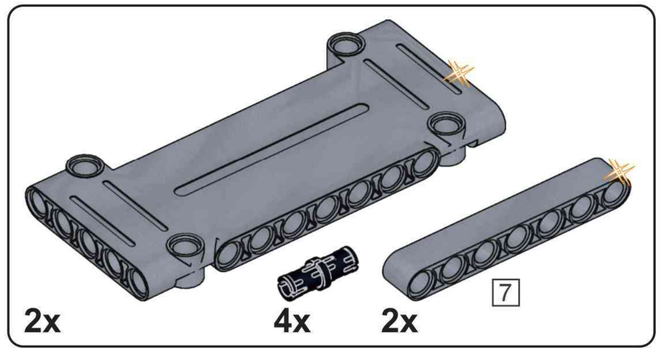

M10

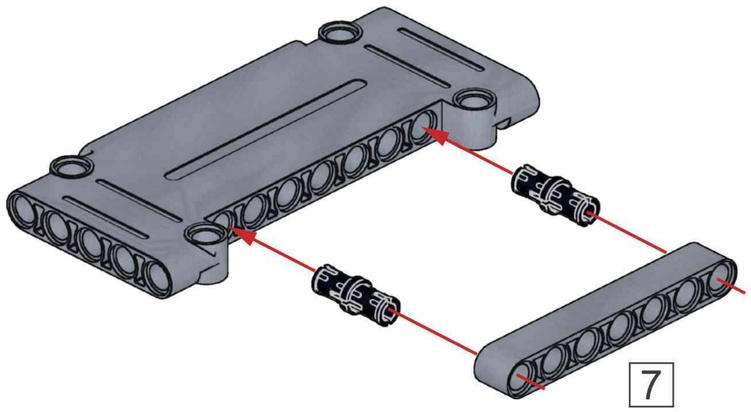

x2

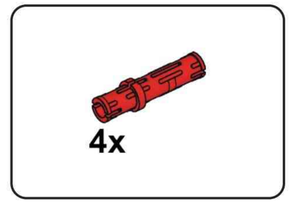

M11

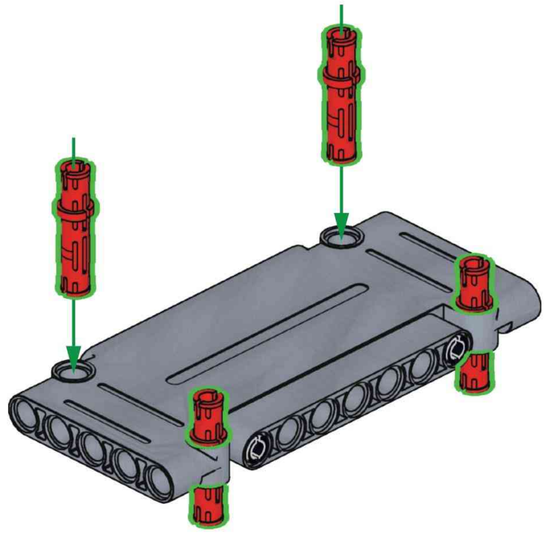

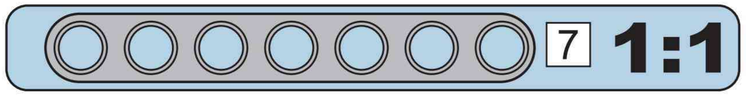

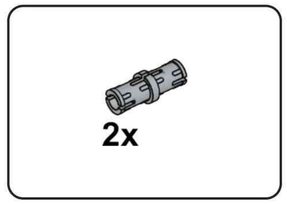

M12

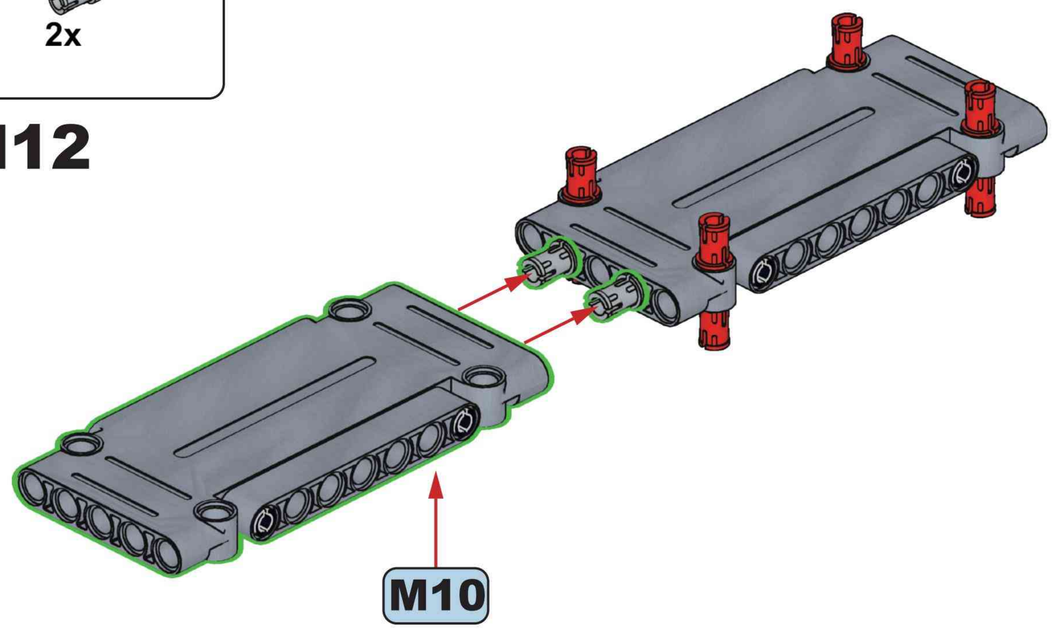

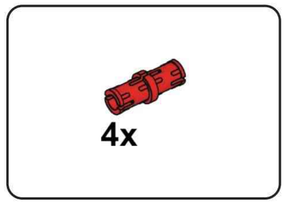

M13

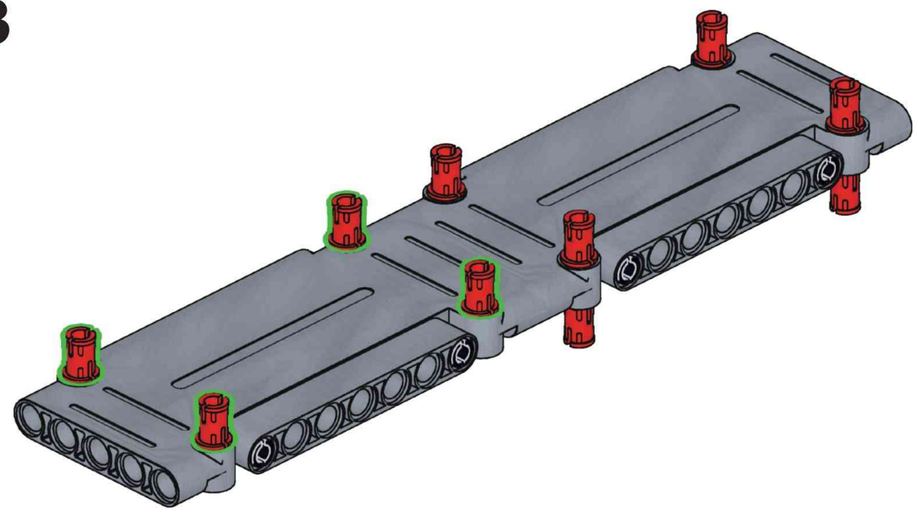

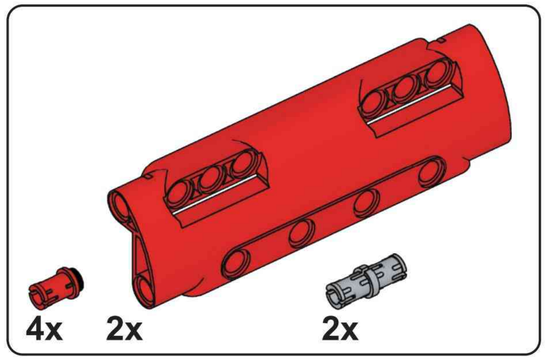

M14

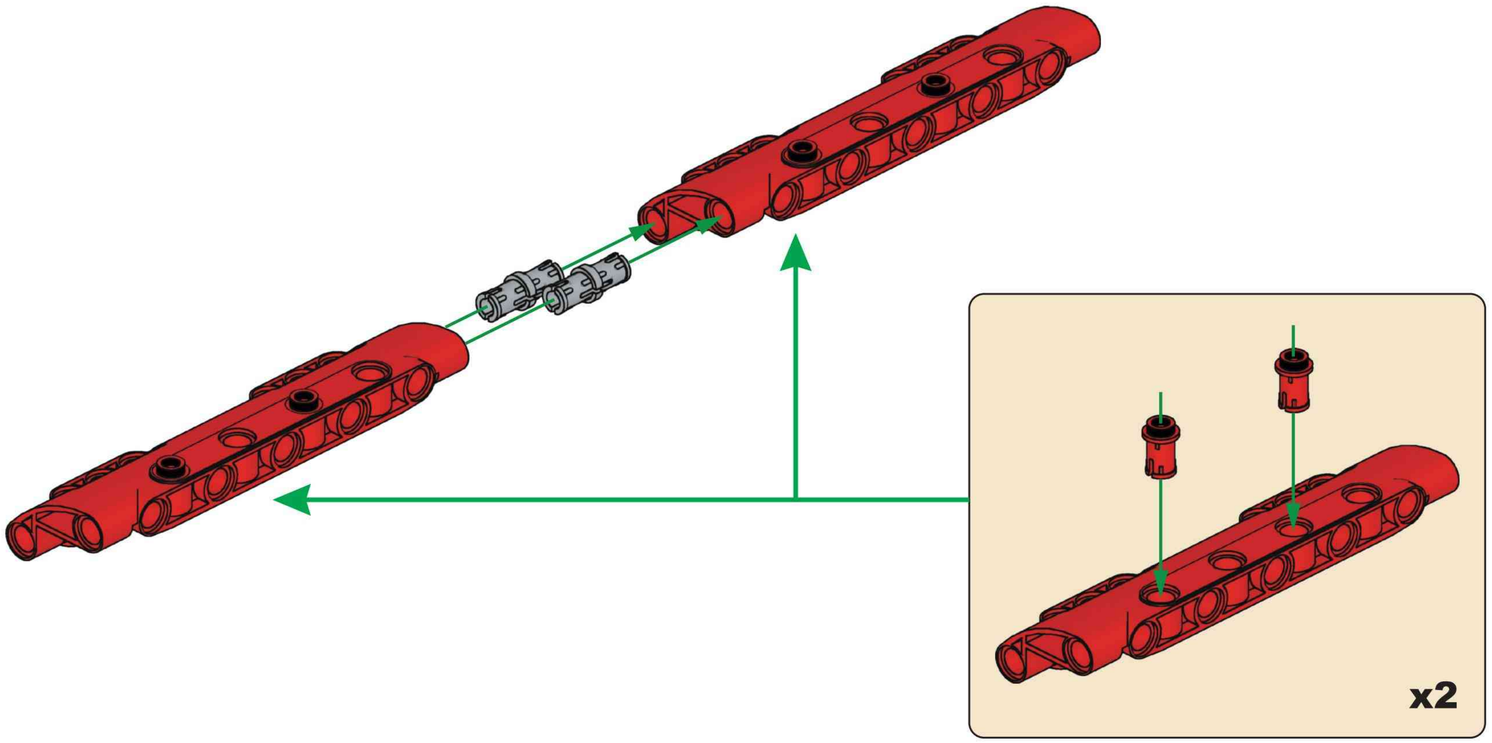

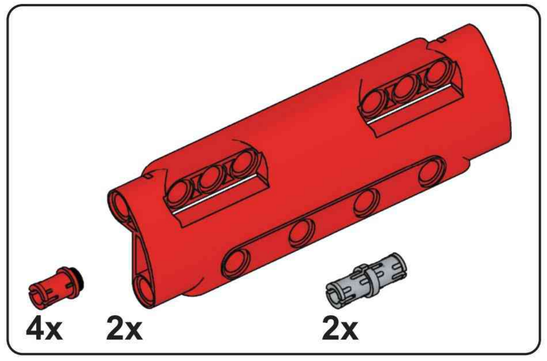

M15

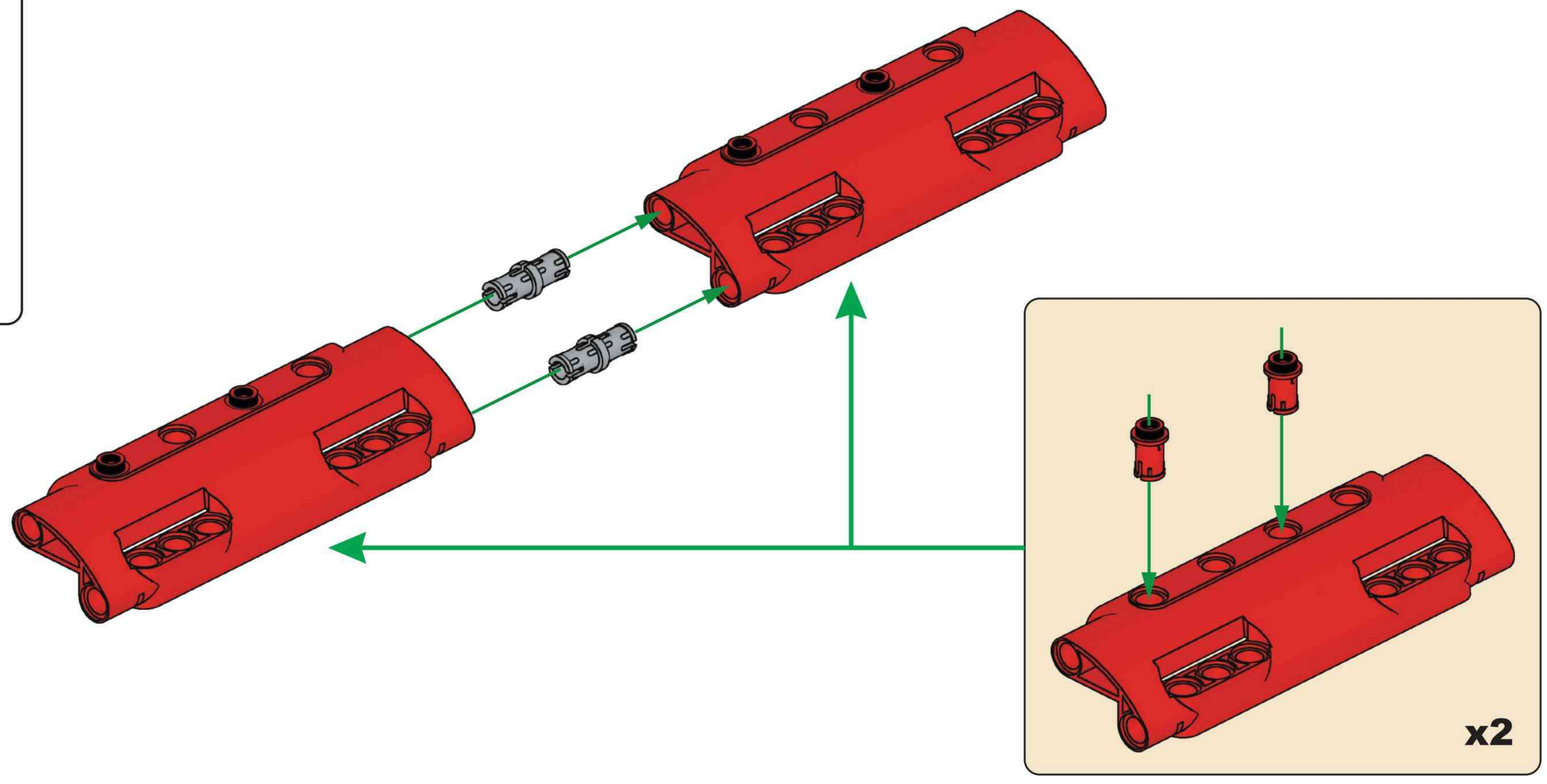

M16

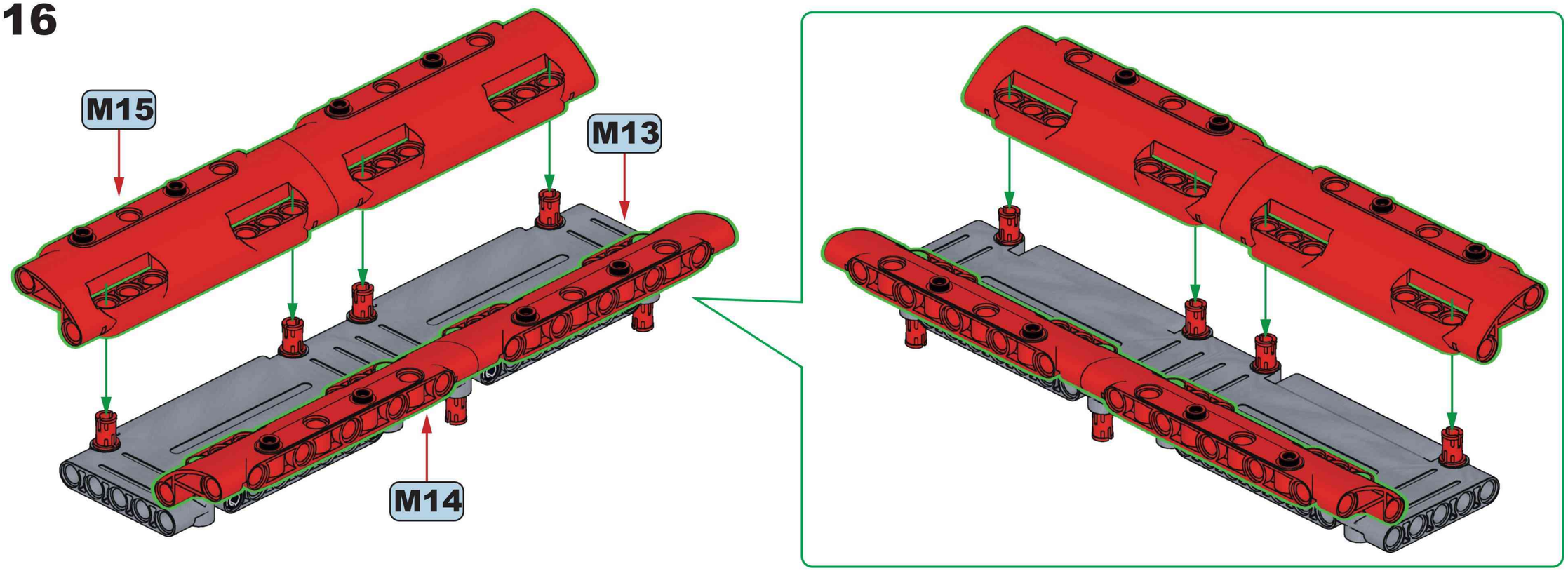

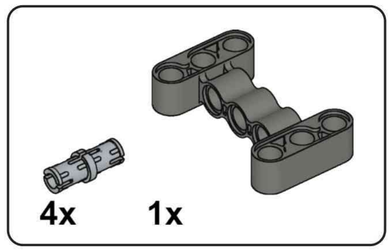

M17

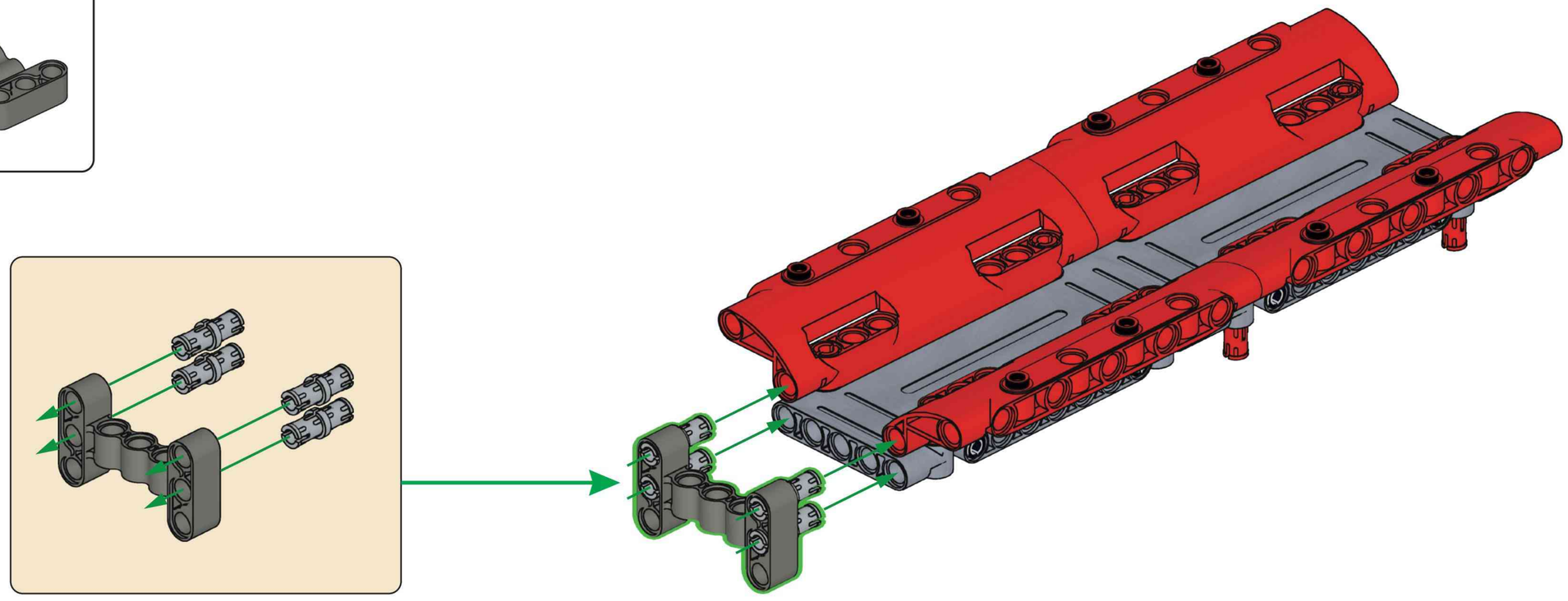

M18

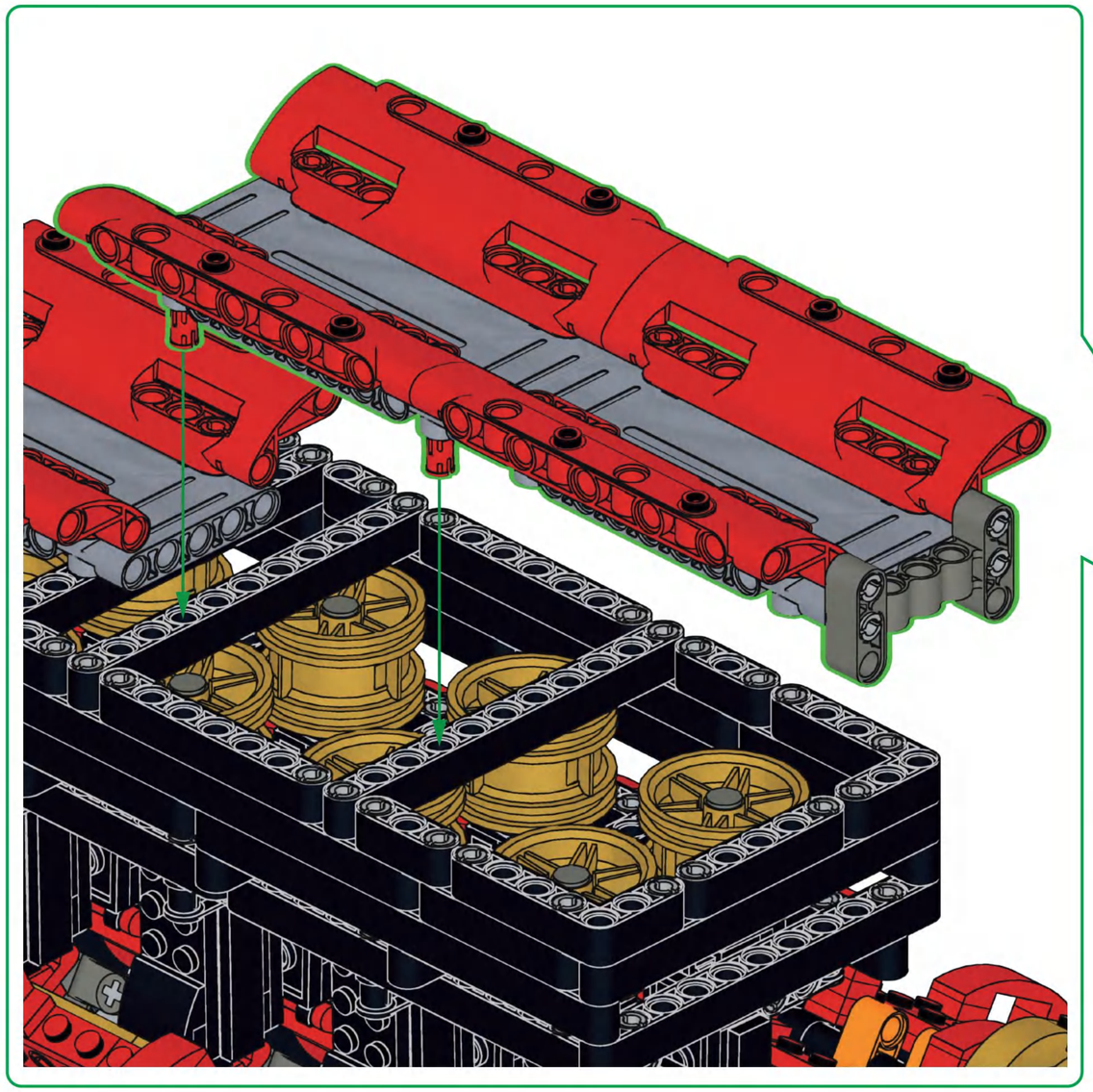

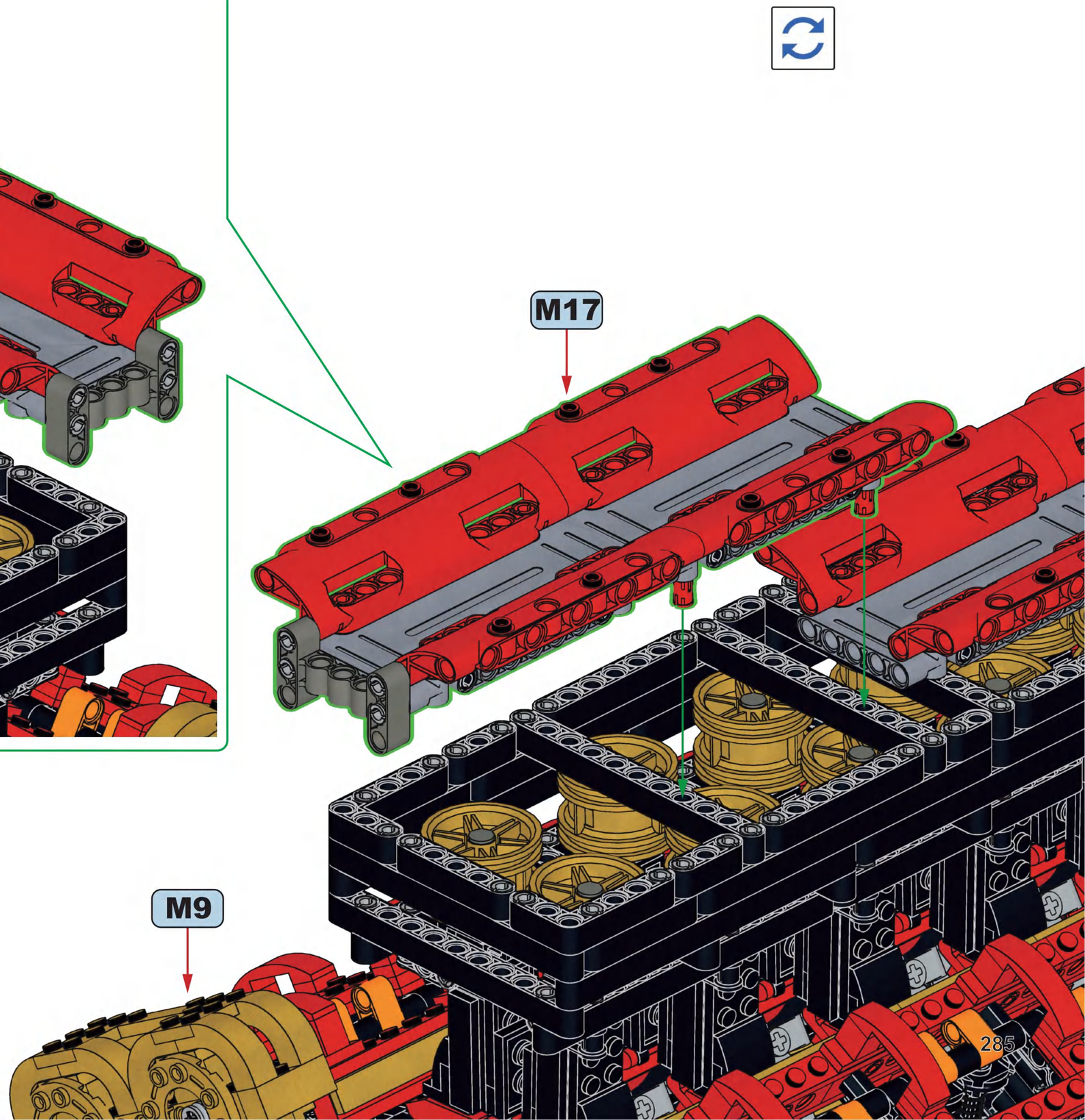

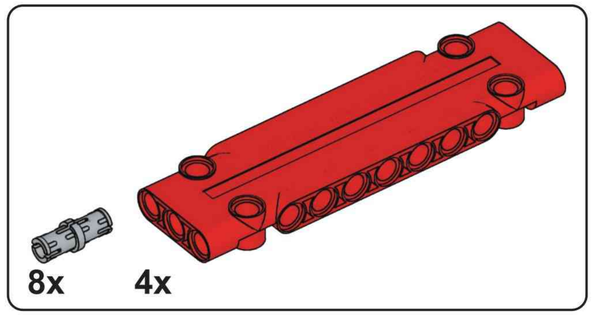

M19

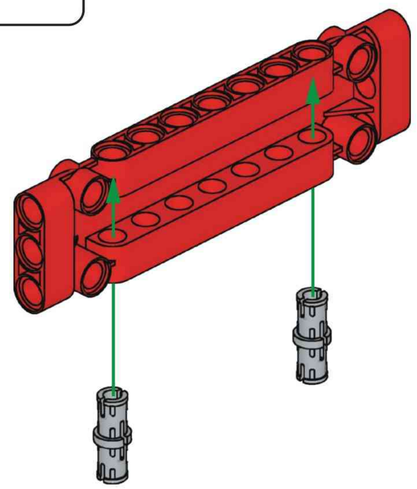

x4

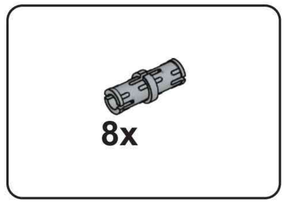

M20

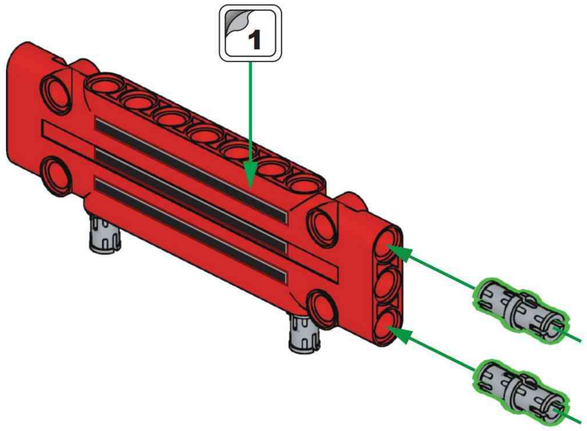

x4

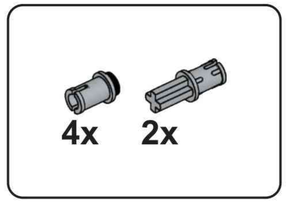

M21

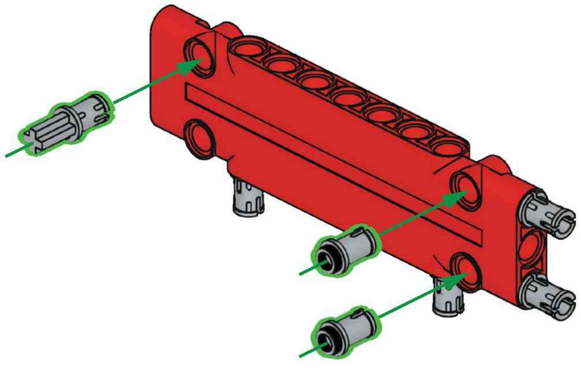

x2

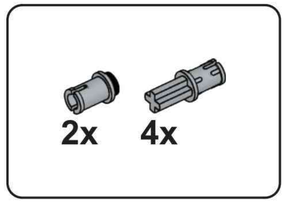

M22

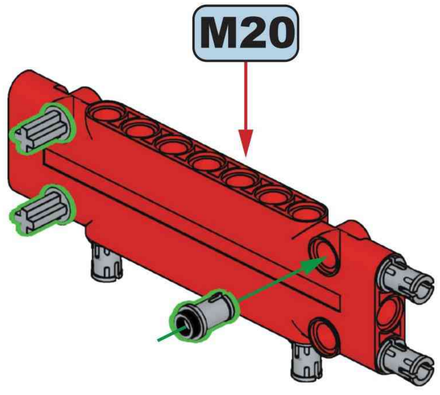

x2

M23

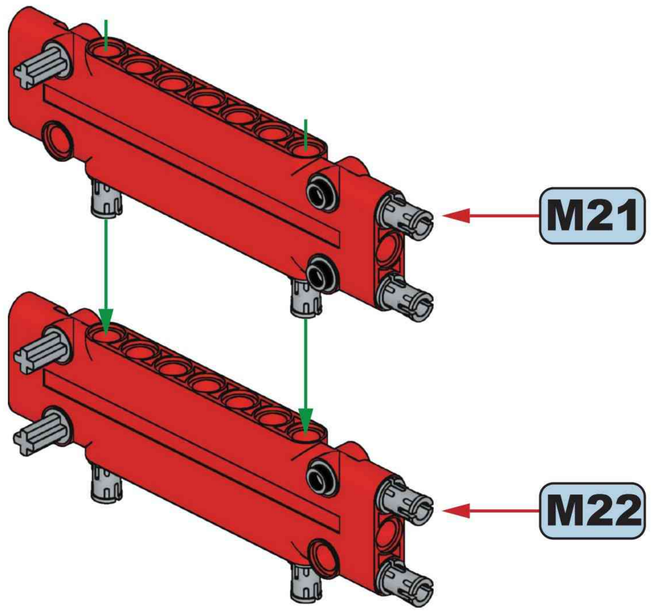

x2

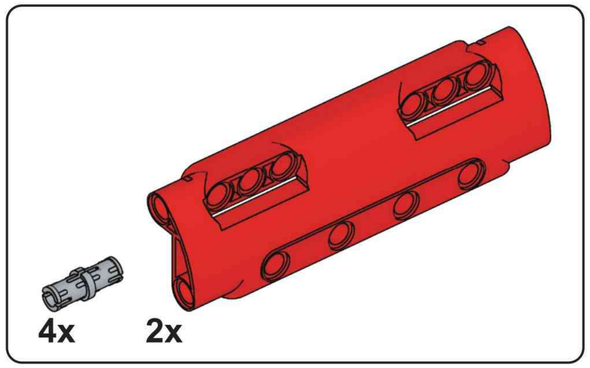

M24

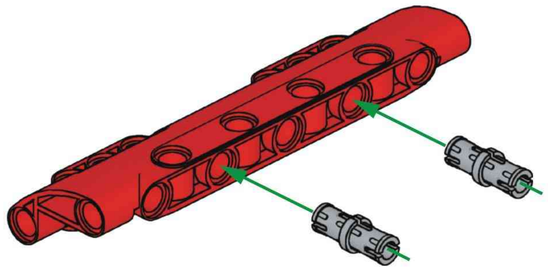

x2

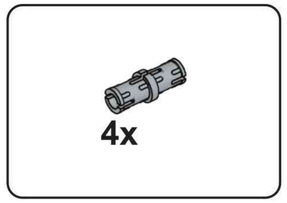

M25

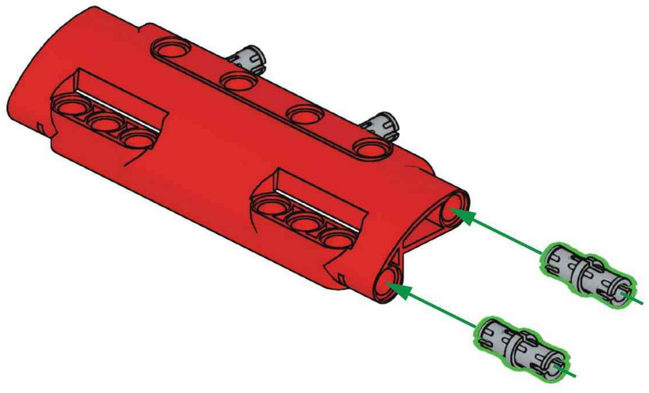

x2

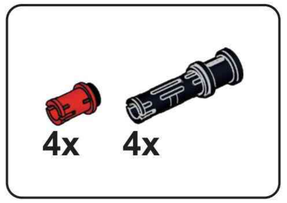

M26

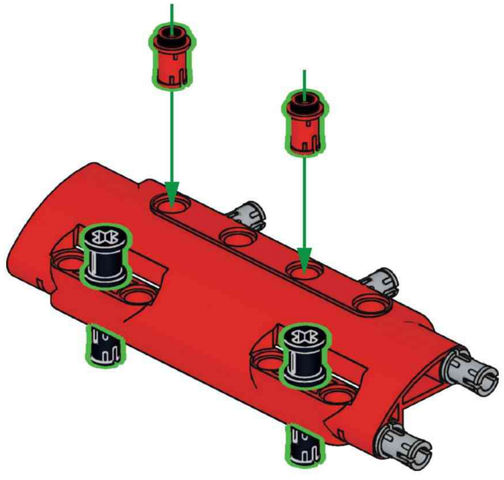

x2

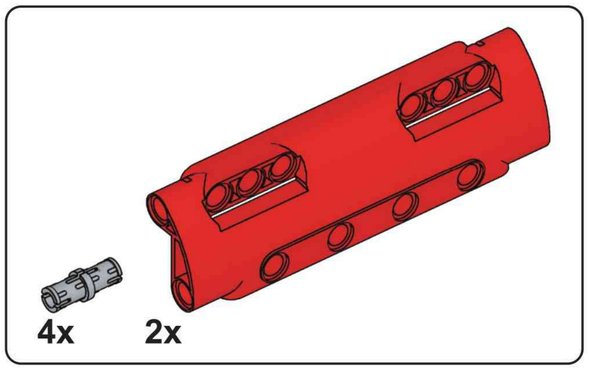

M27

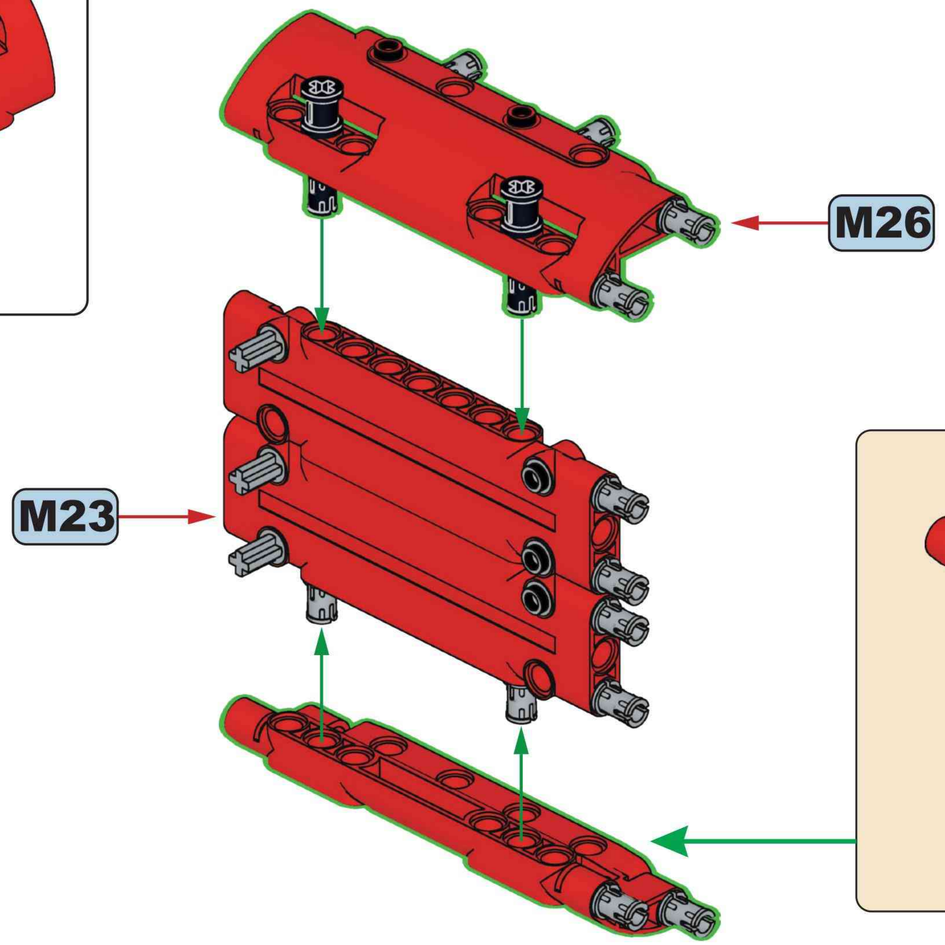

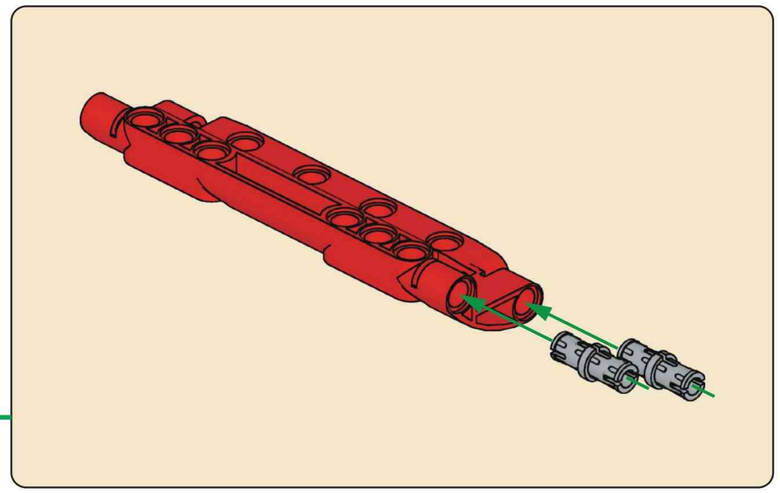

x2

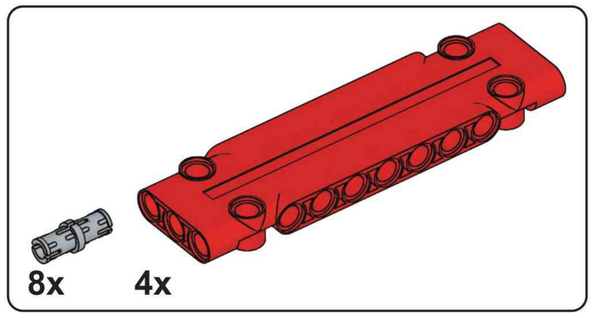

M28

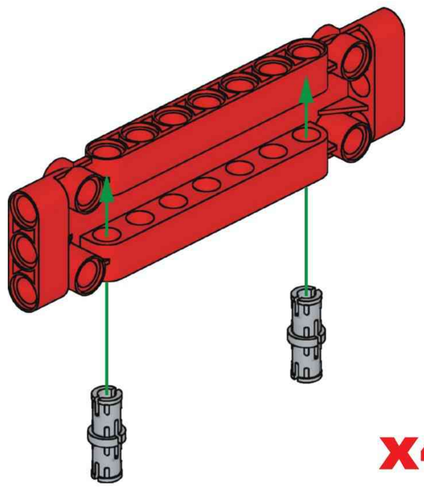

x4

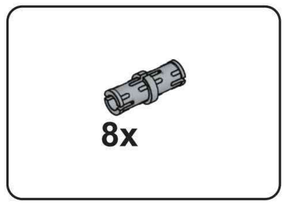

M29

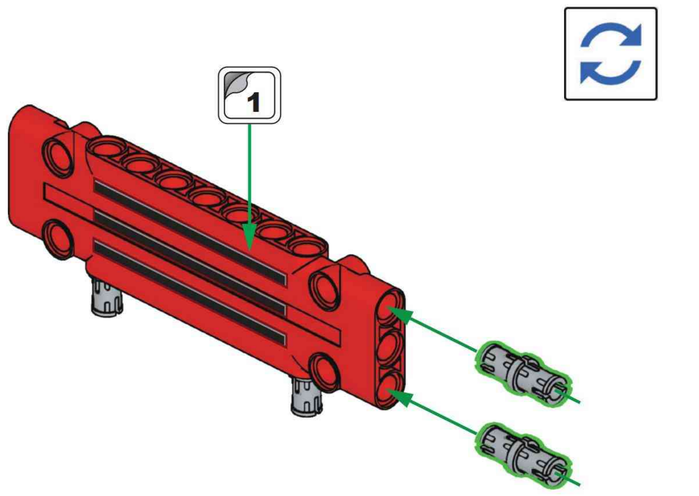

x4

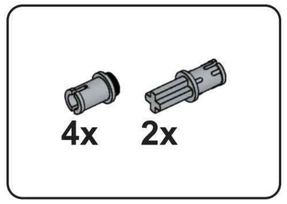

M30

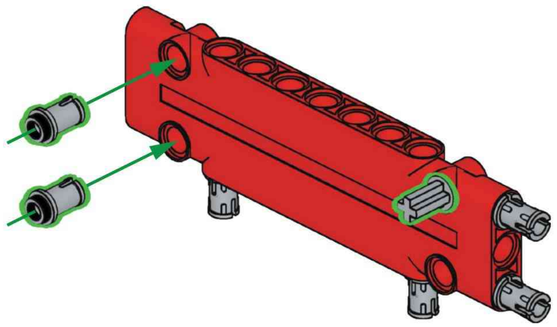

x2

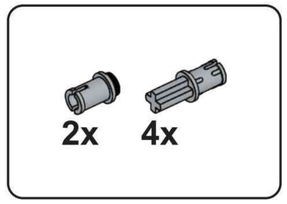

M31

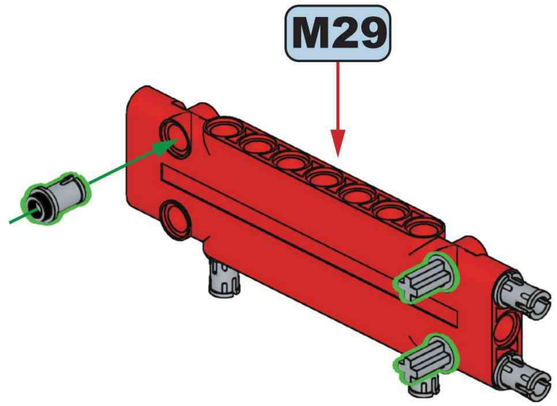

x2

M32

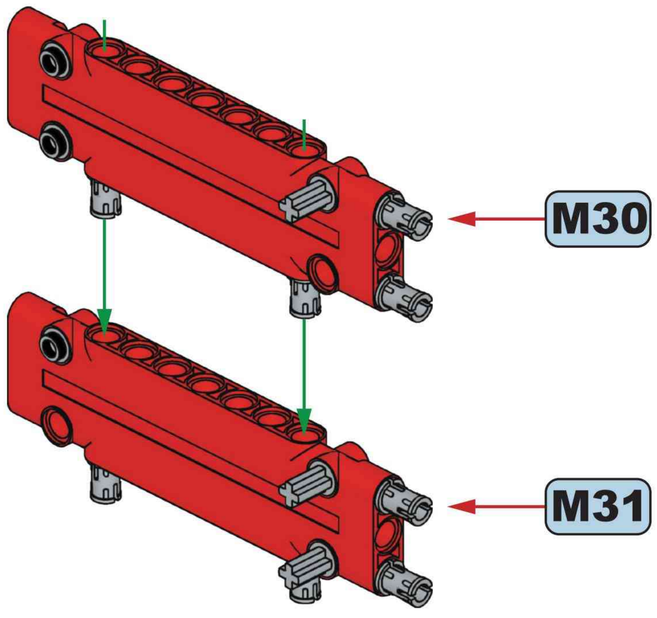

x2

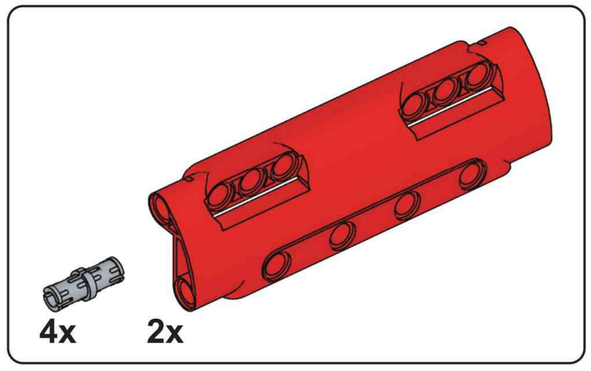

M33

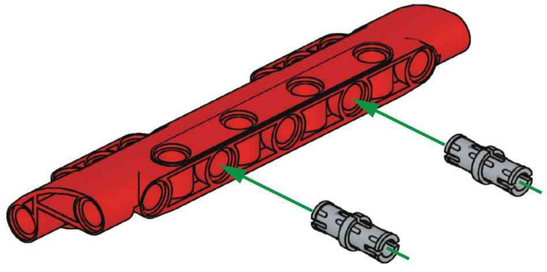

x2

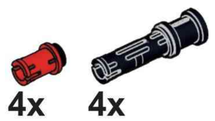

M34

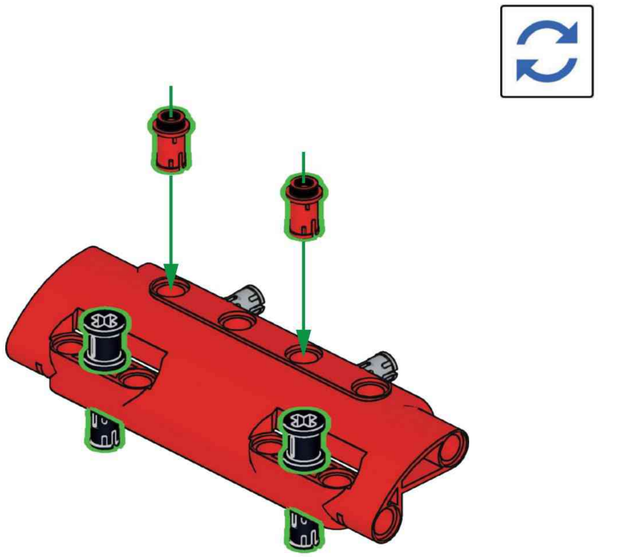

x2

M35

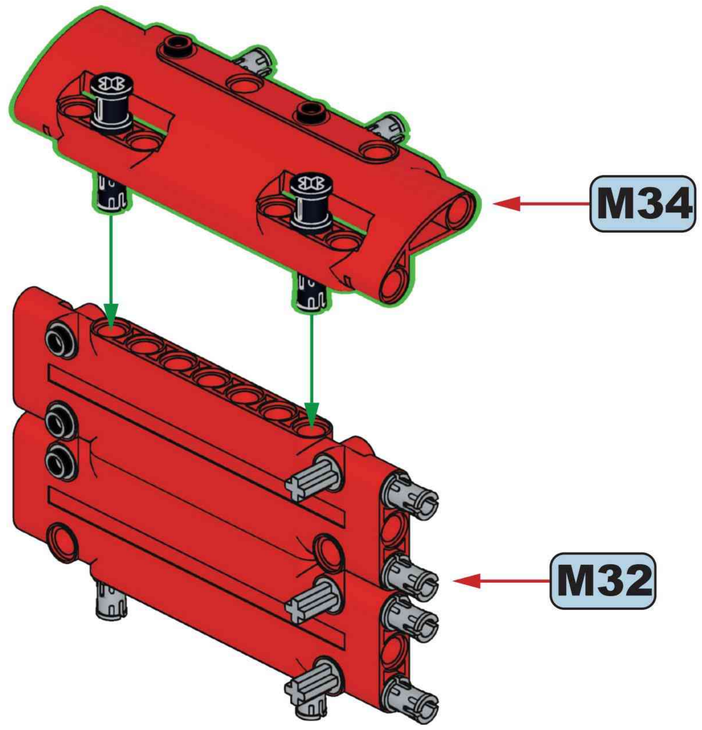

x2

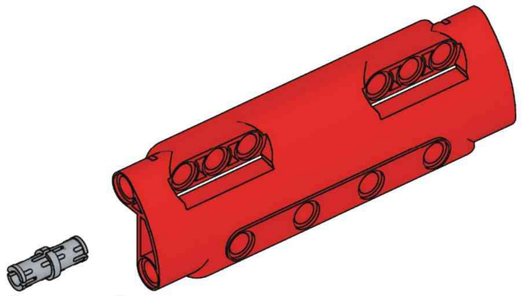

M36

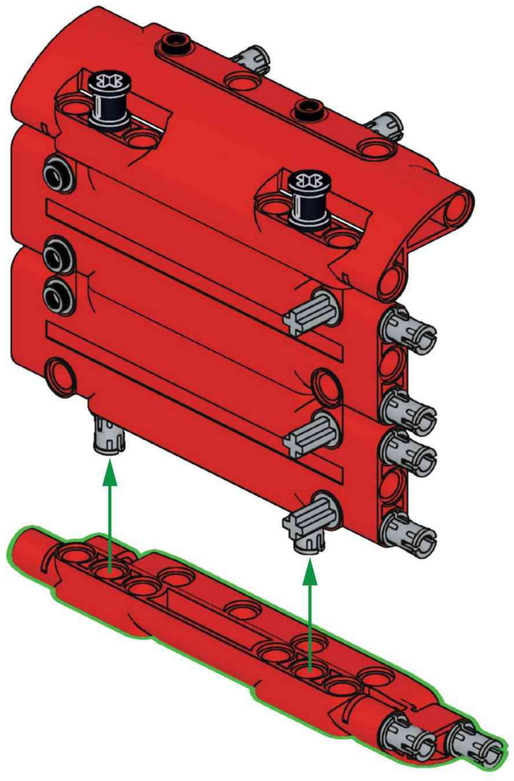

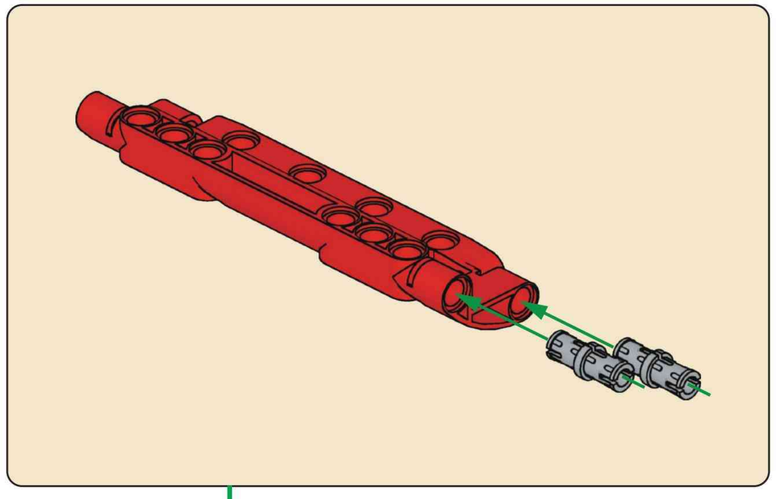

x2

M37

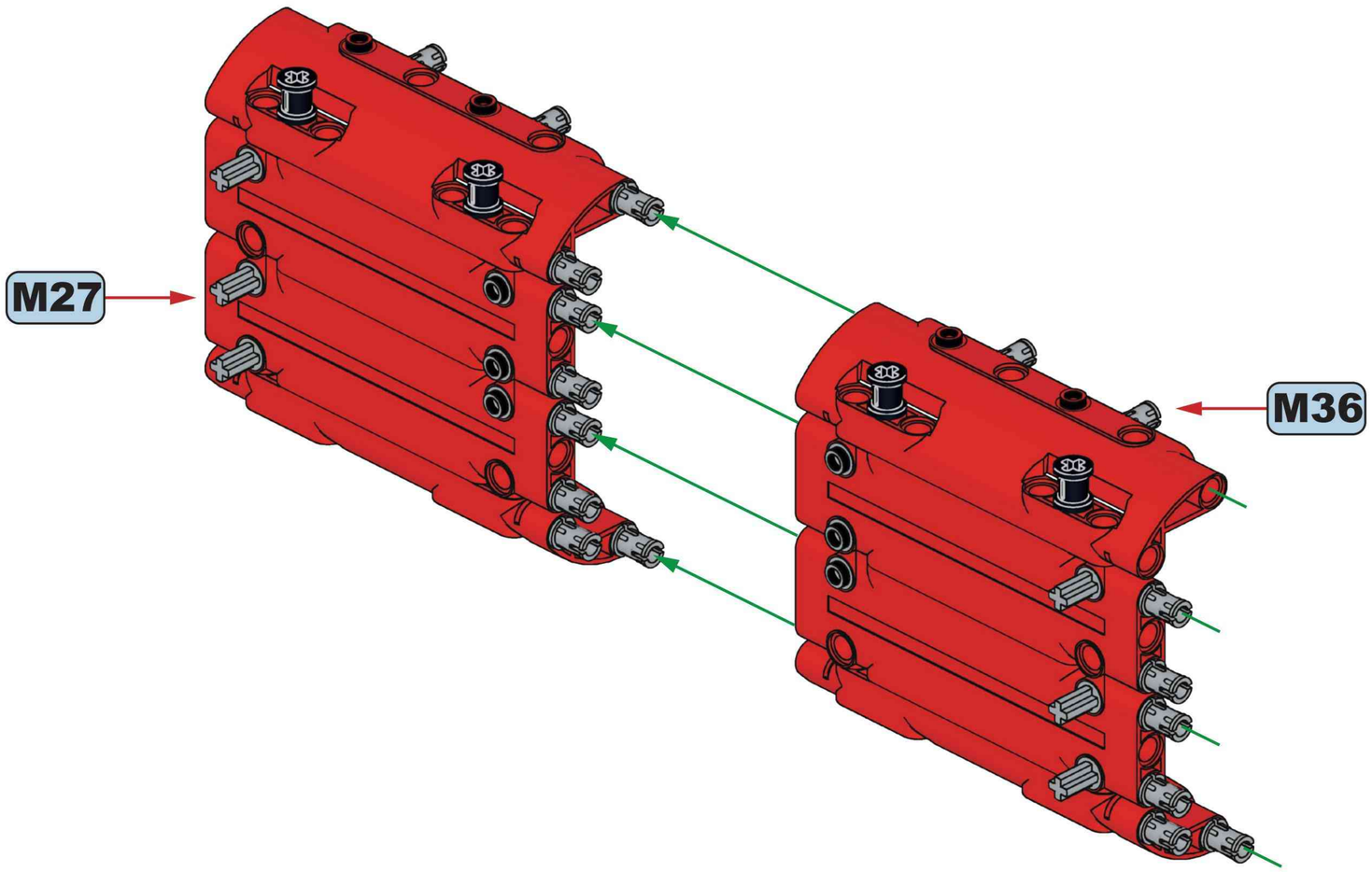

x2

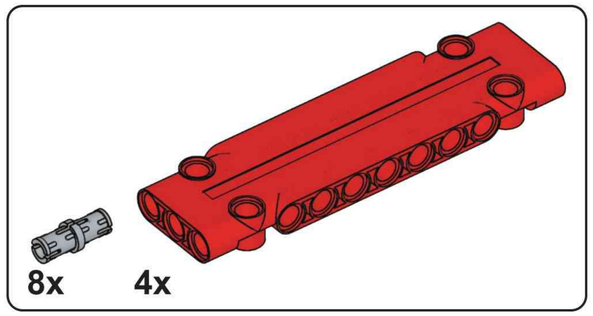

M38

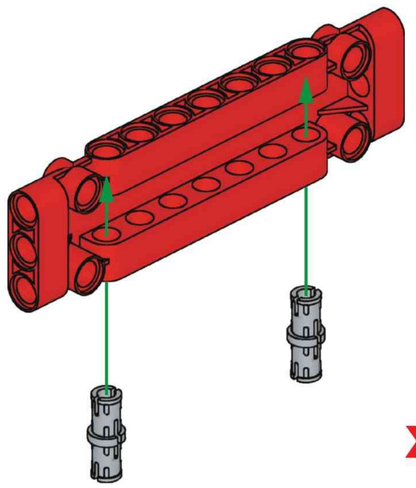

x4

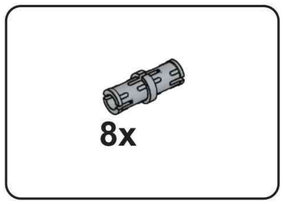

M39

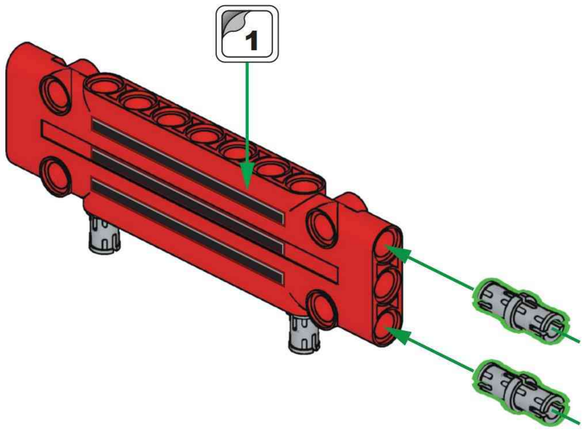

x4

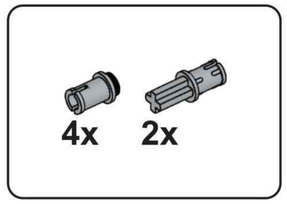

M40

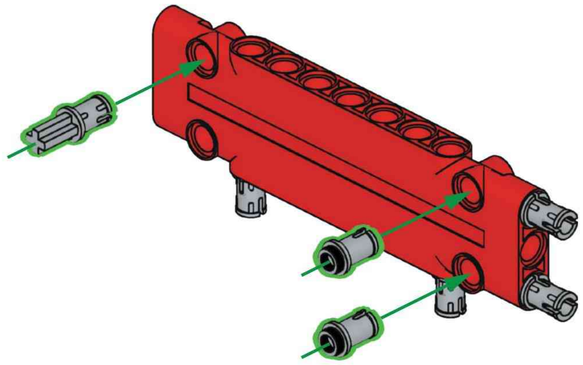

x2

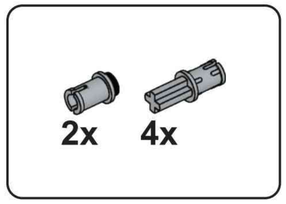

M41

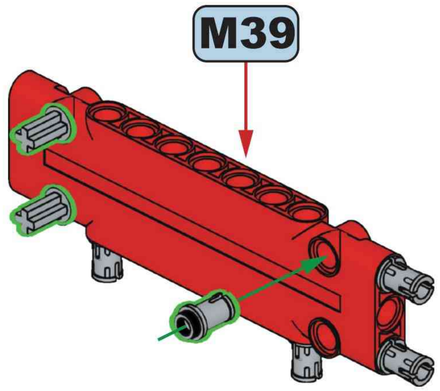

x2

M42

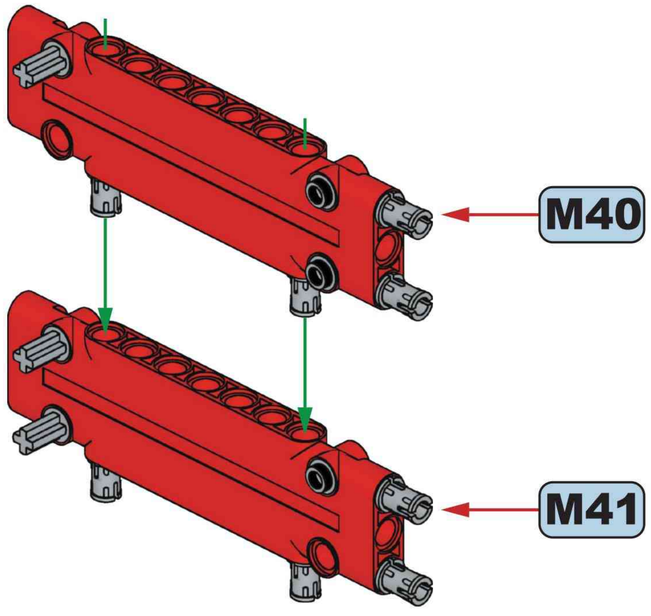

x2

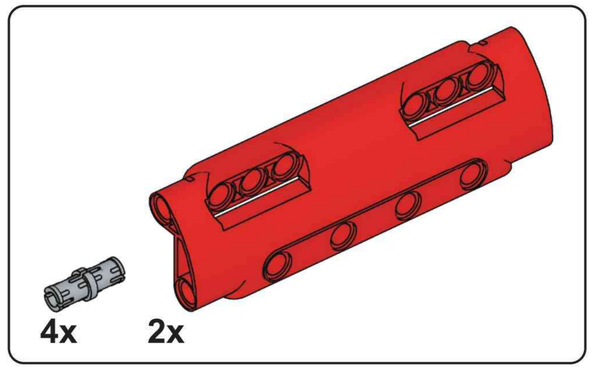

M43

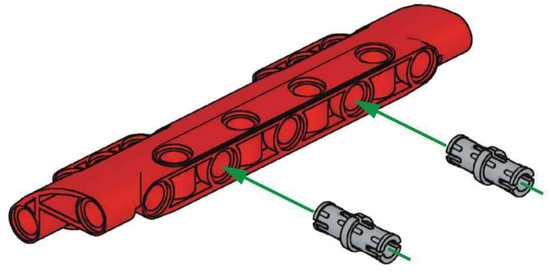

x2

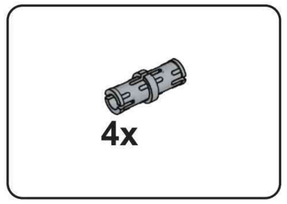

M44

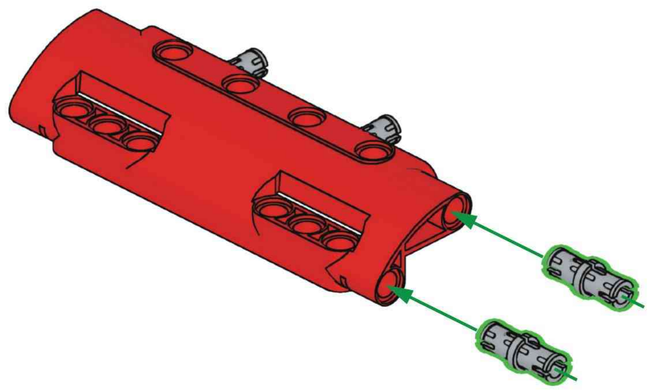

x2

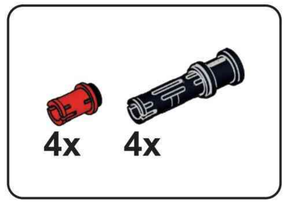

M45

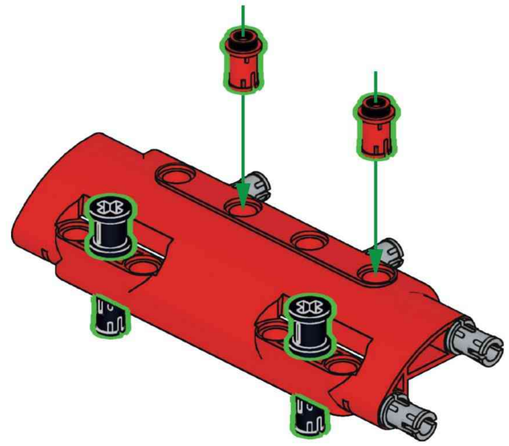

x2

M46

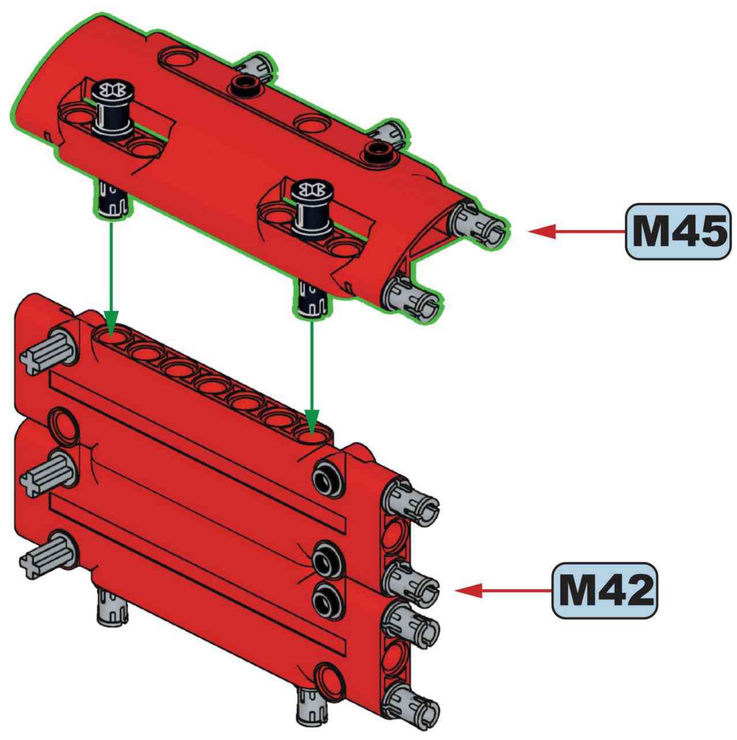

x2

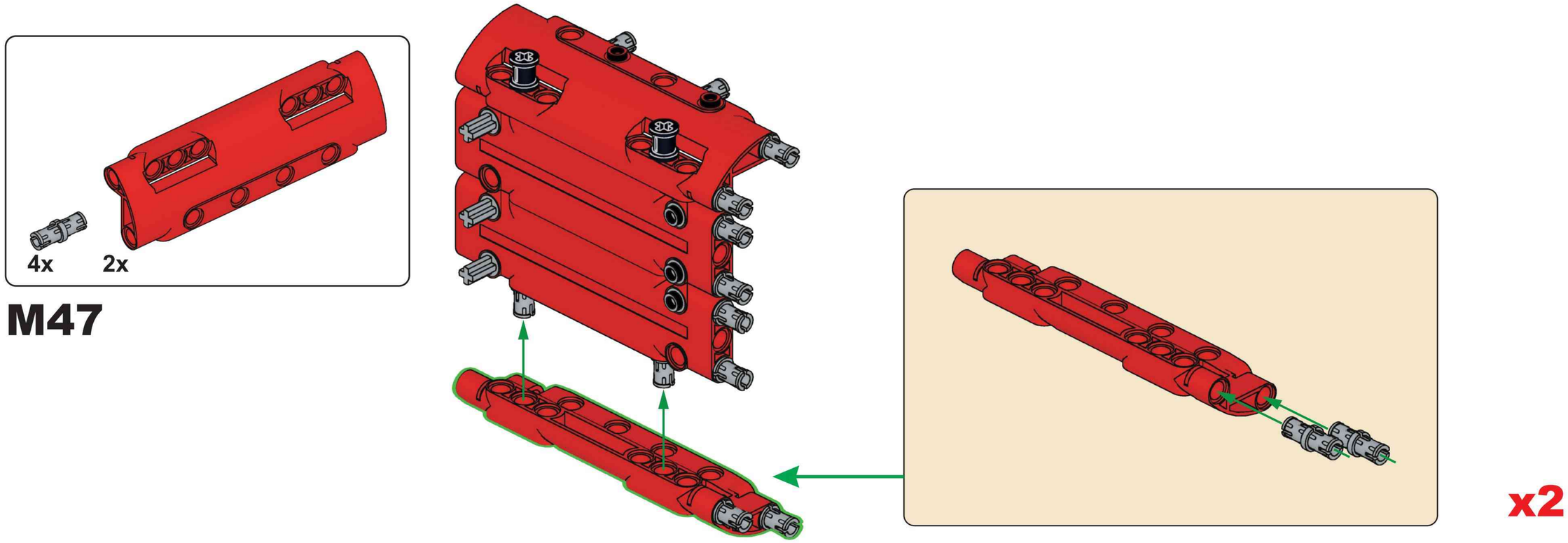

M47

M48

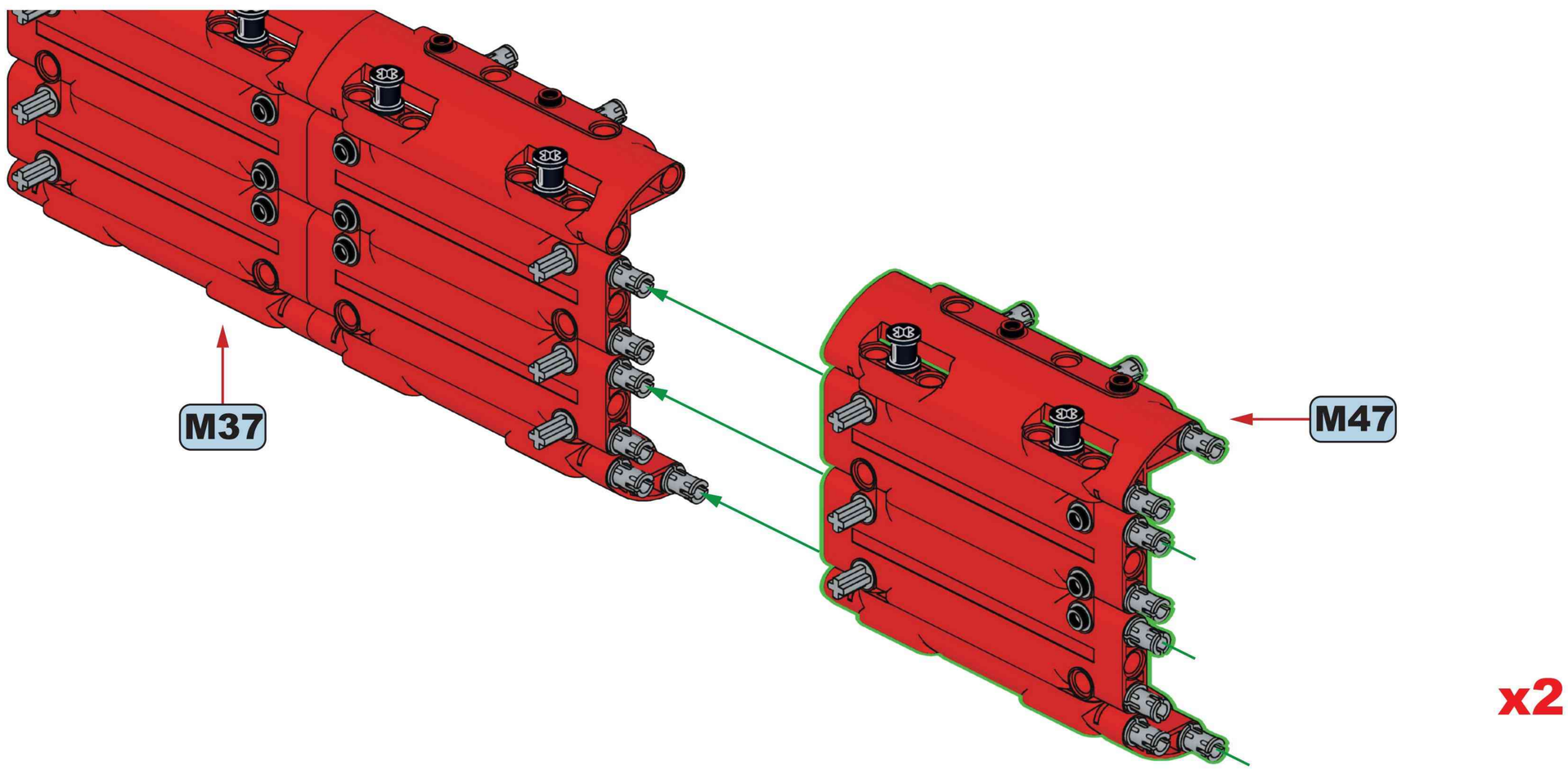

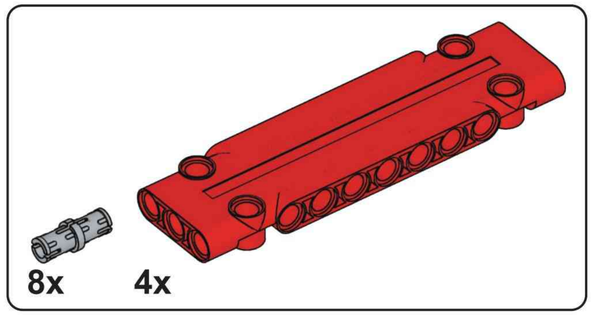

M49

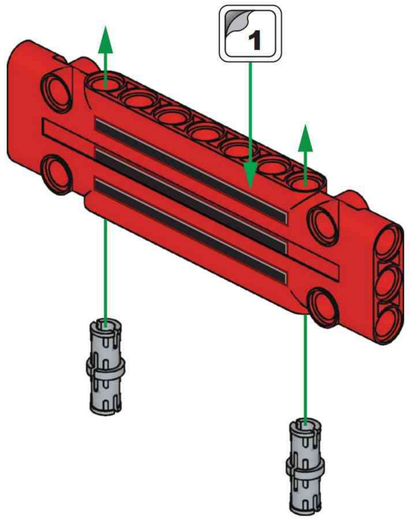

x4

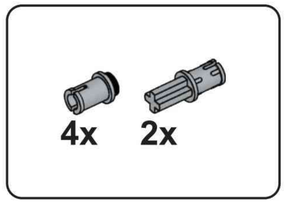

M50

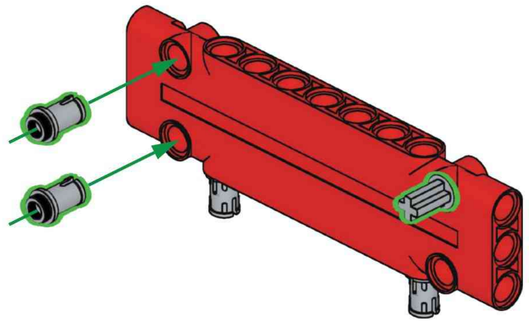

x2

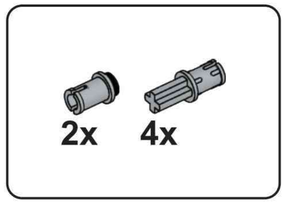

M51

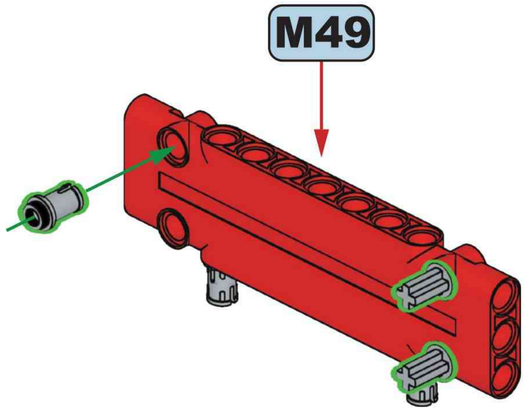

x2

M52

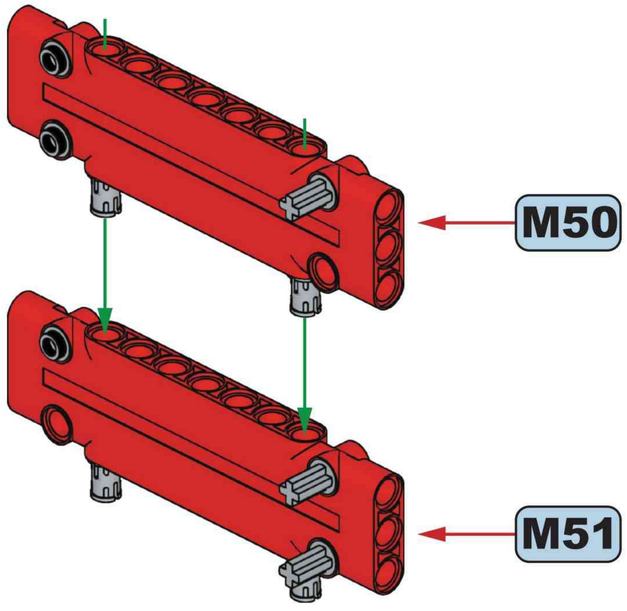

x2

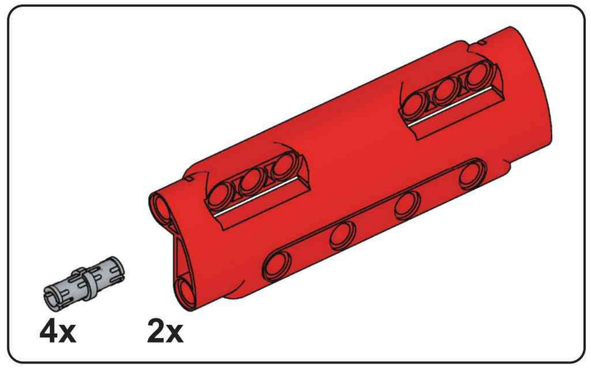

M53

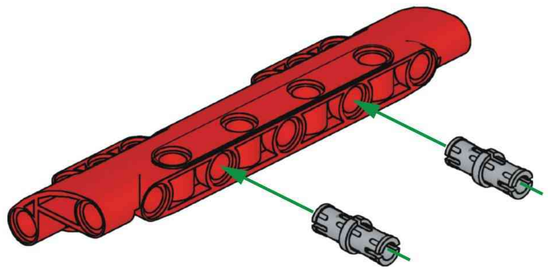

x2

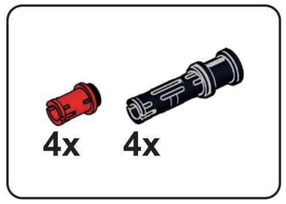

M54

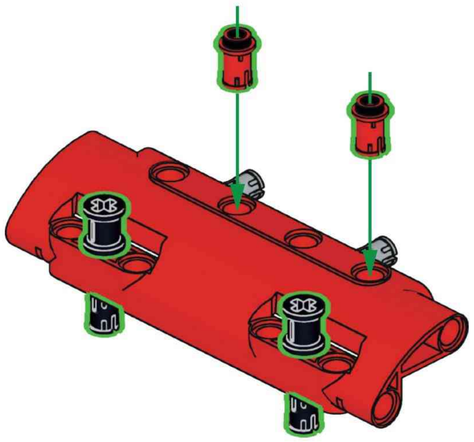

x2

M55

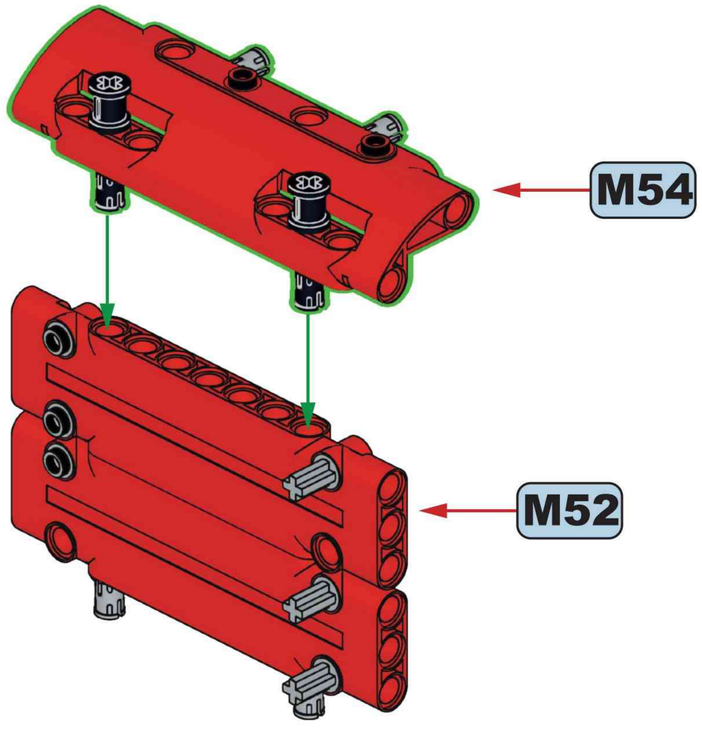

x2

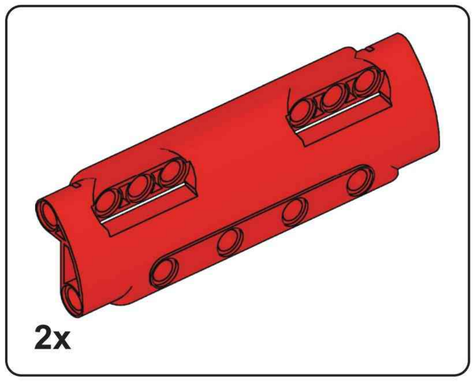

M56

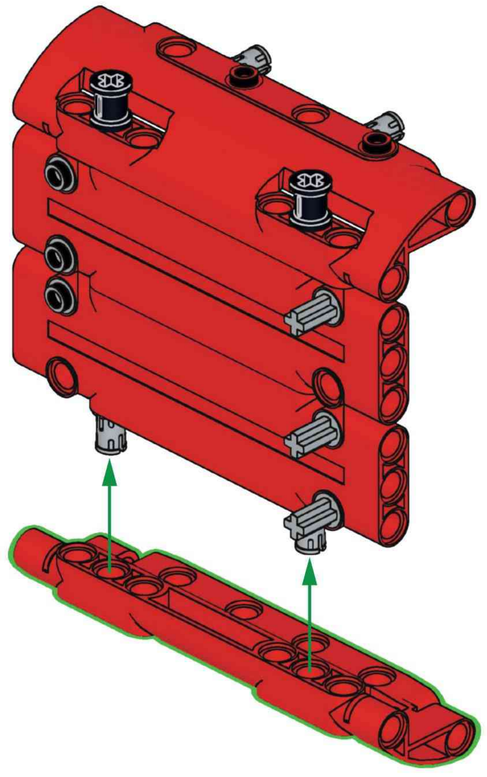

x2

M57

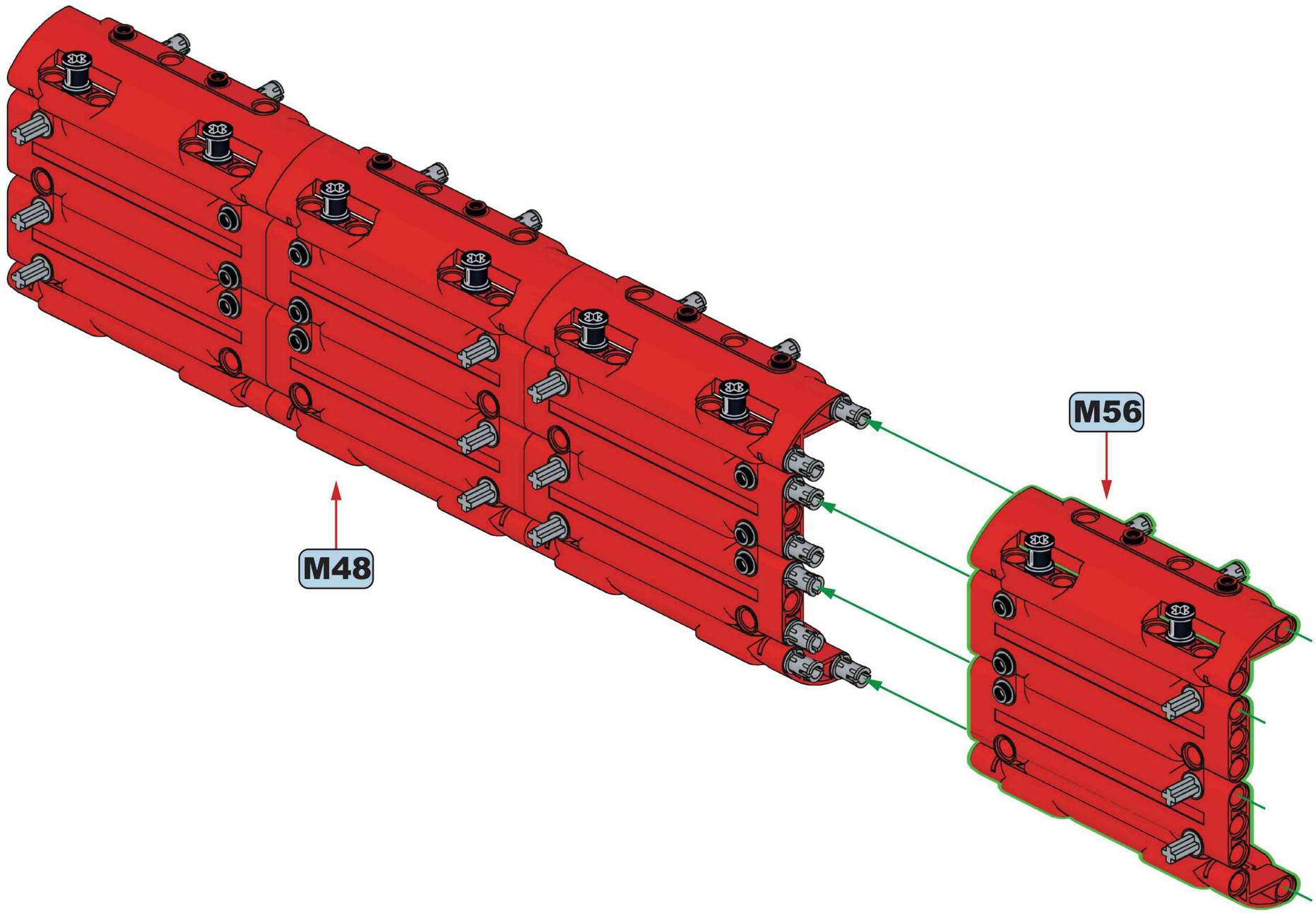

x2

M58

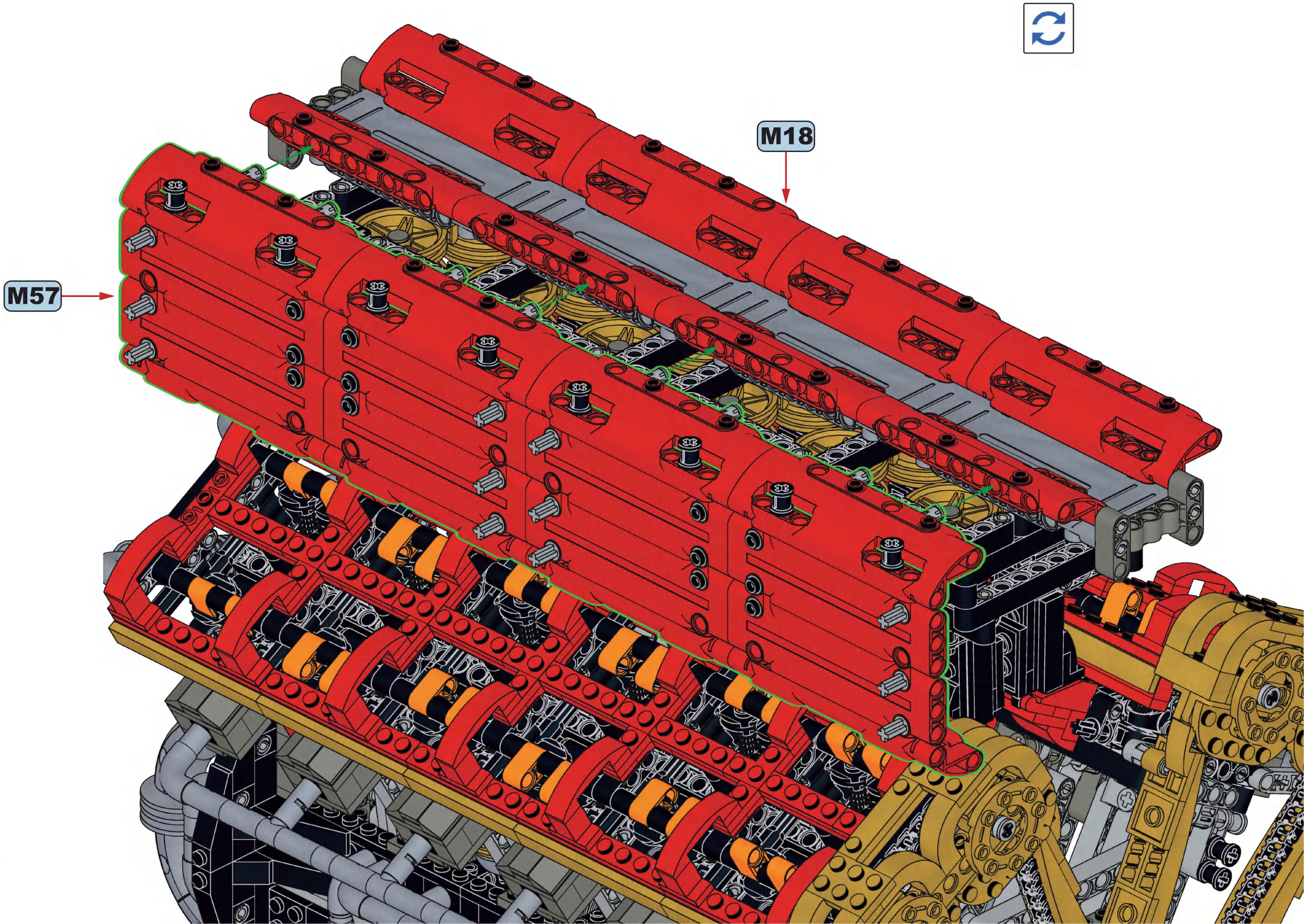

M59

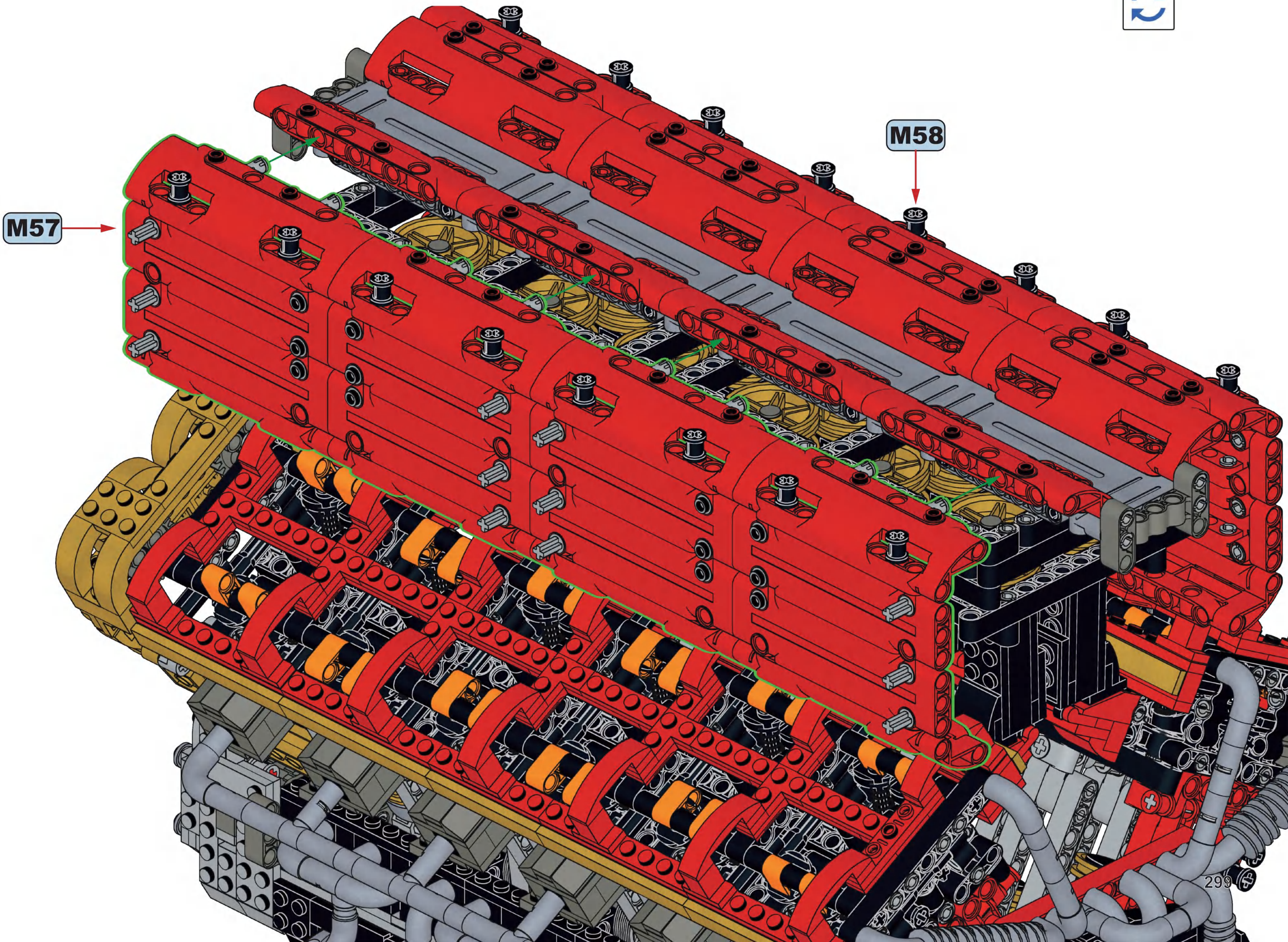

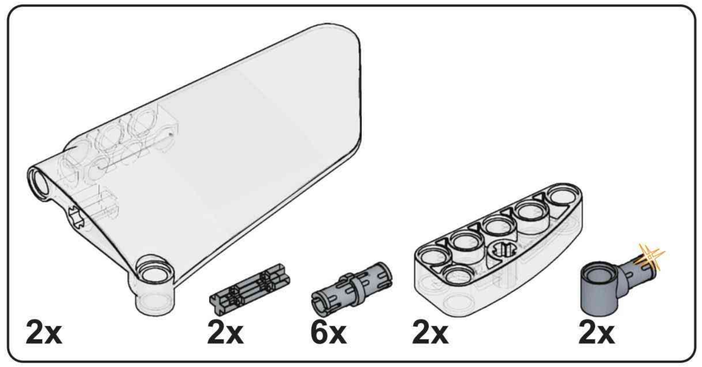

M60

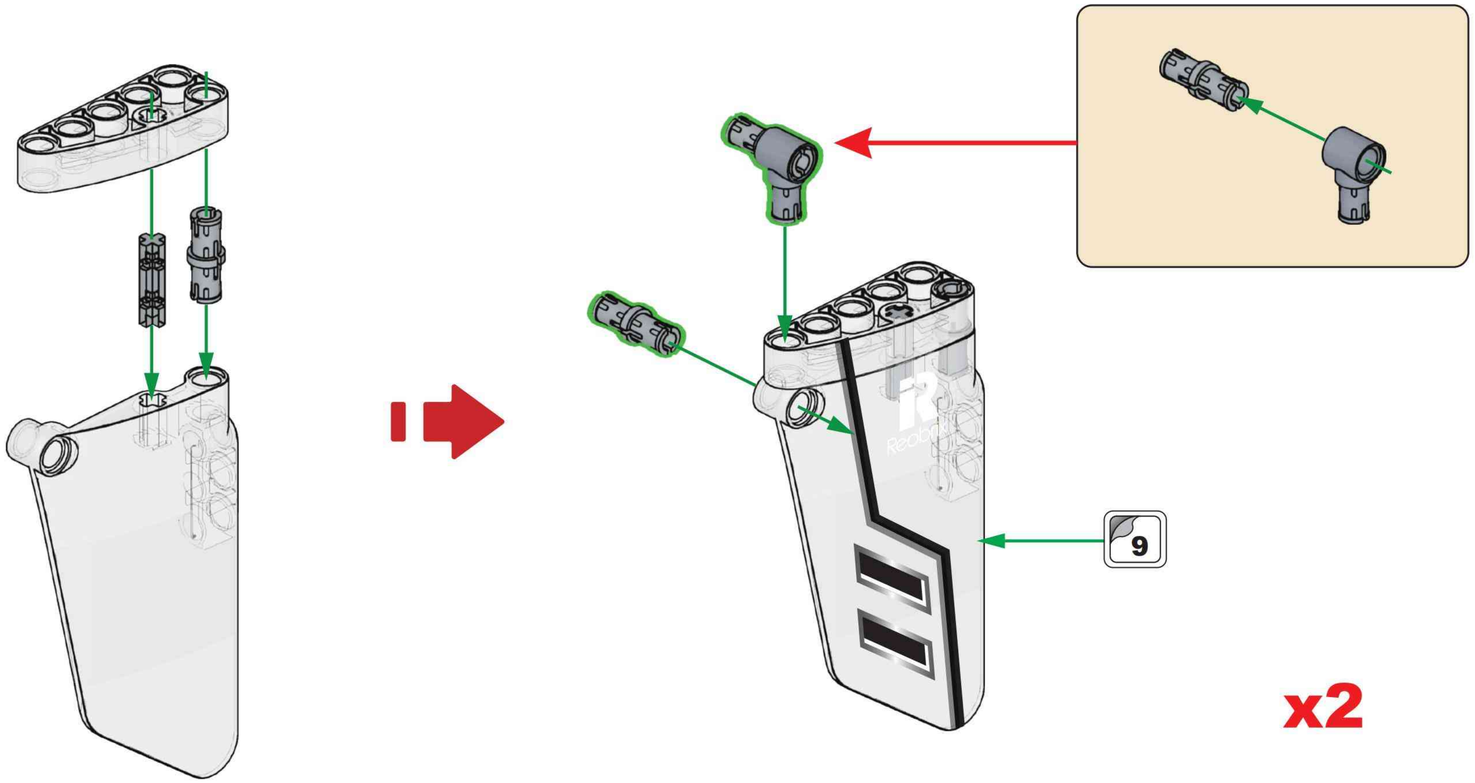

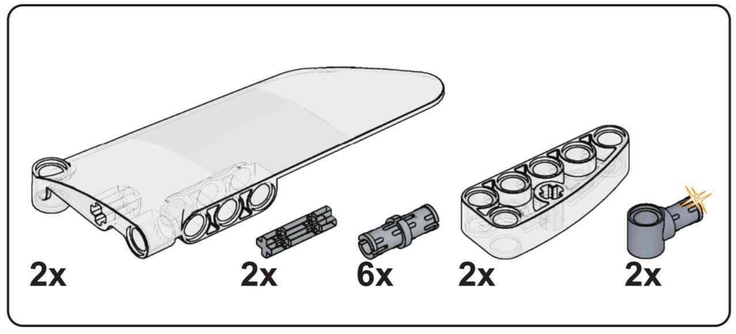

M61

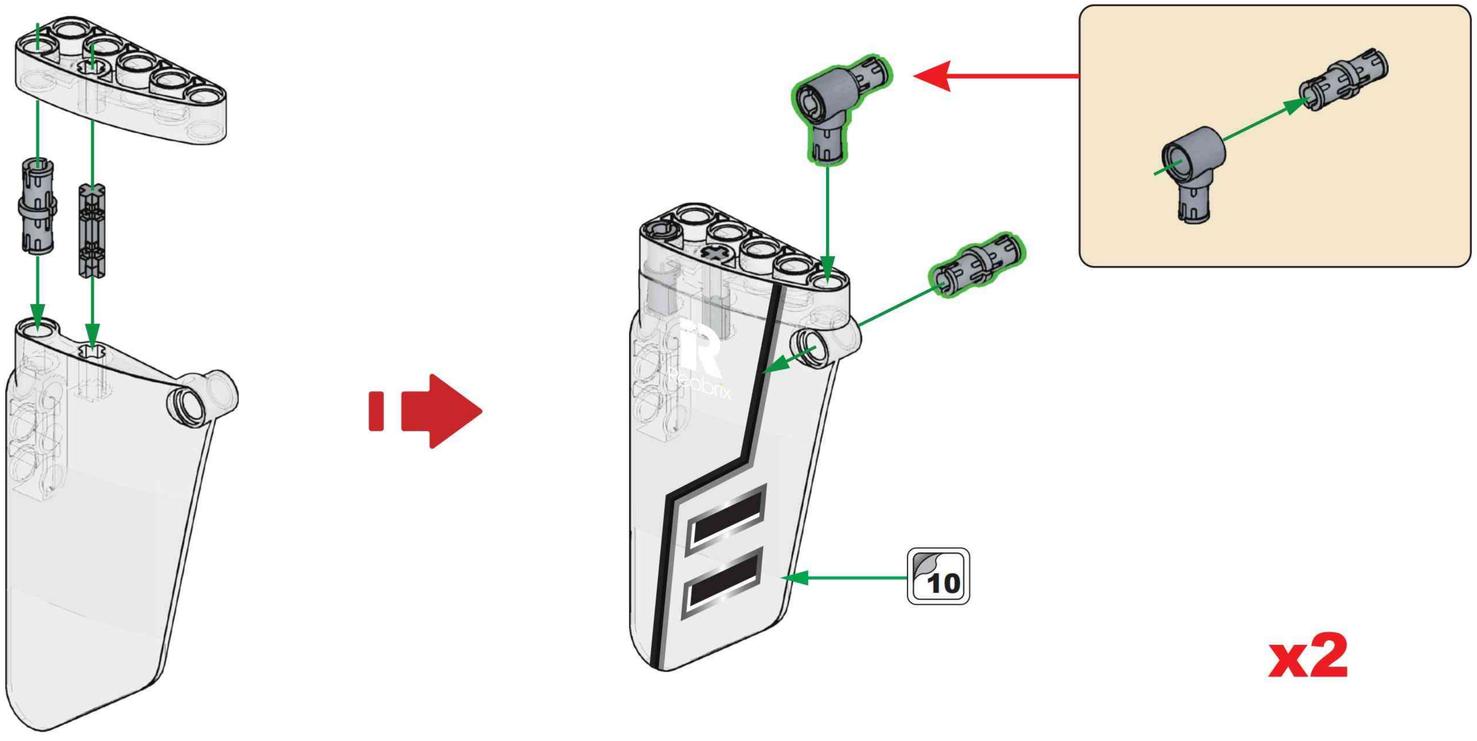

M62

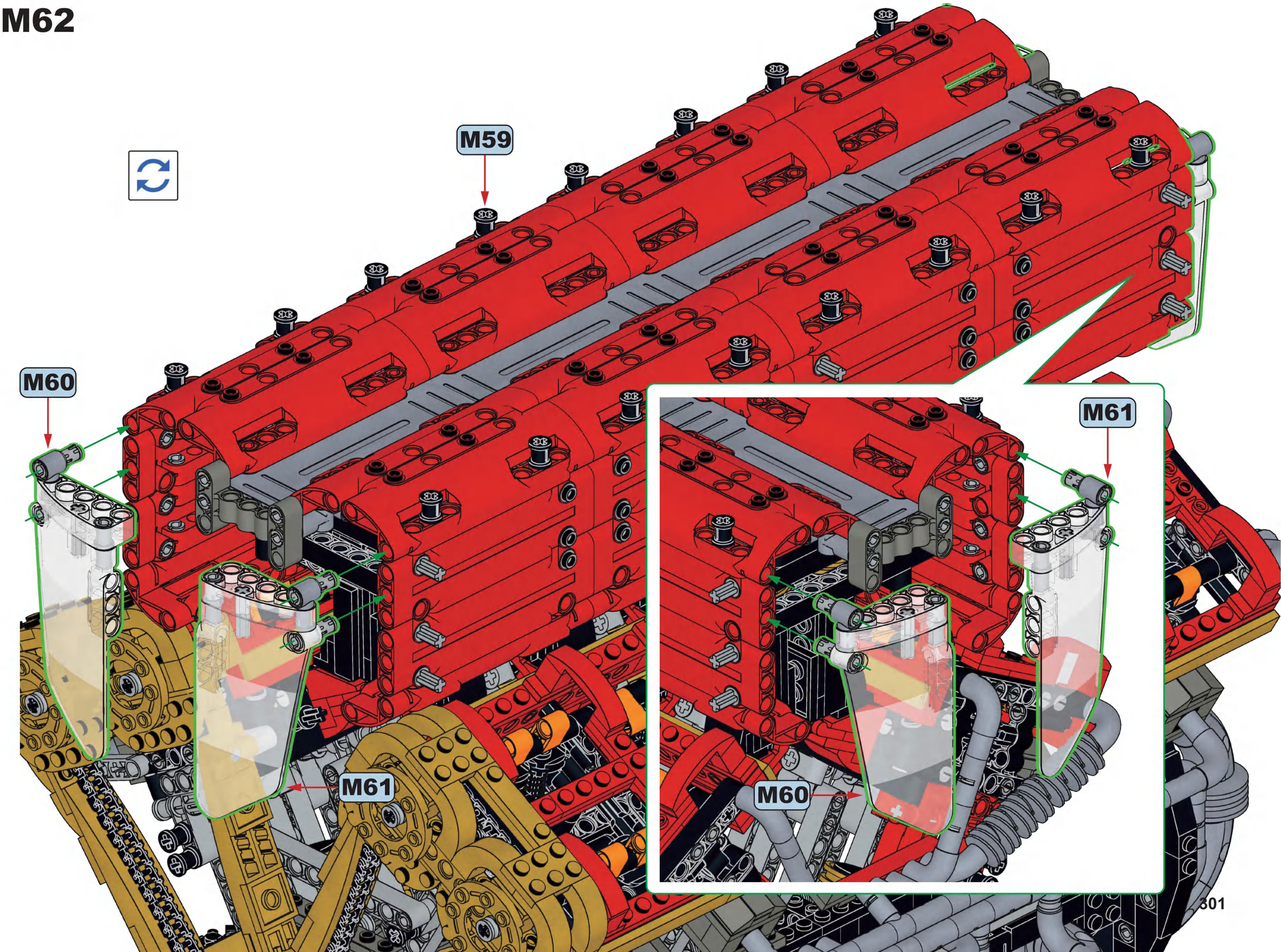

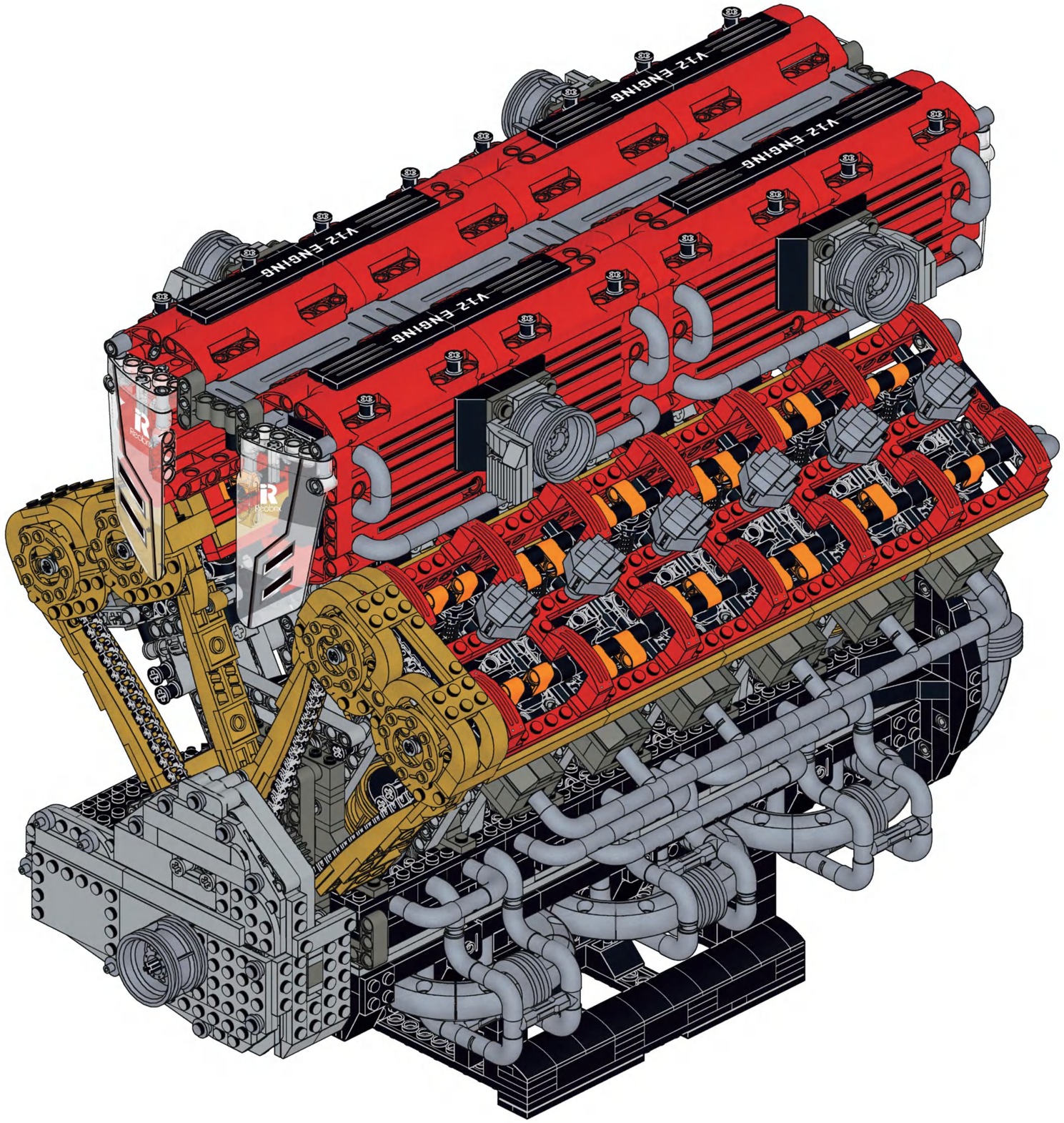

N

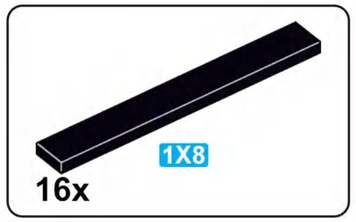

N1

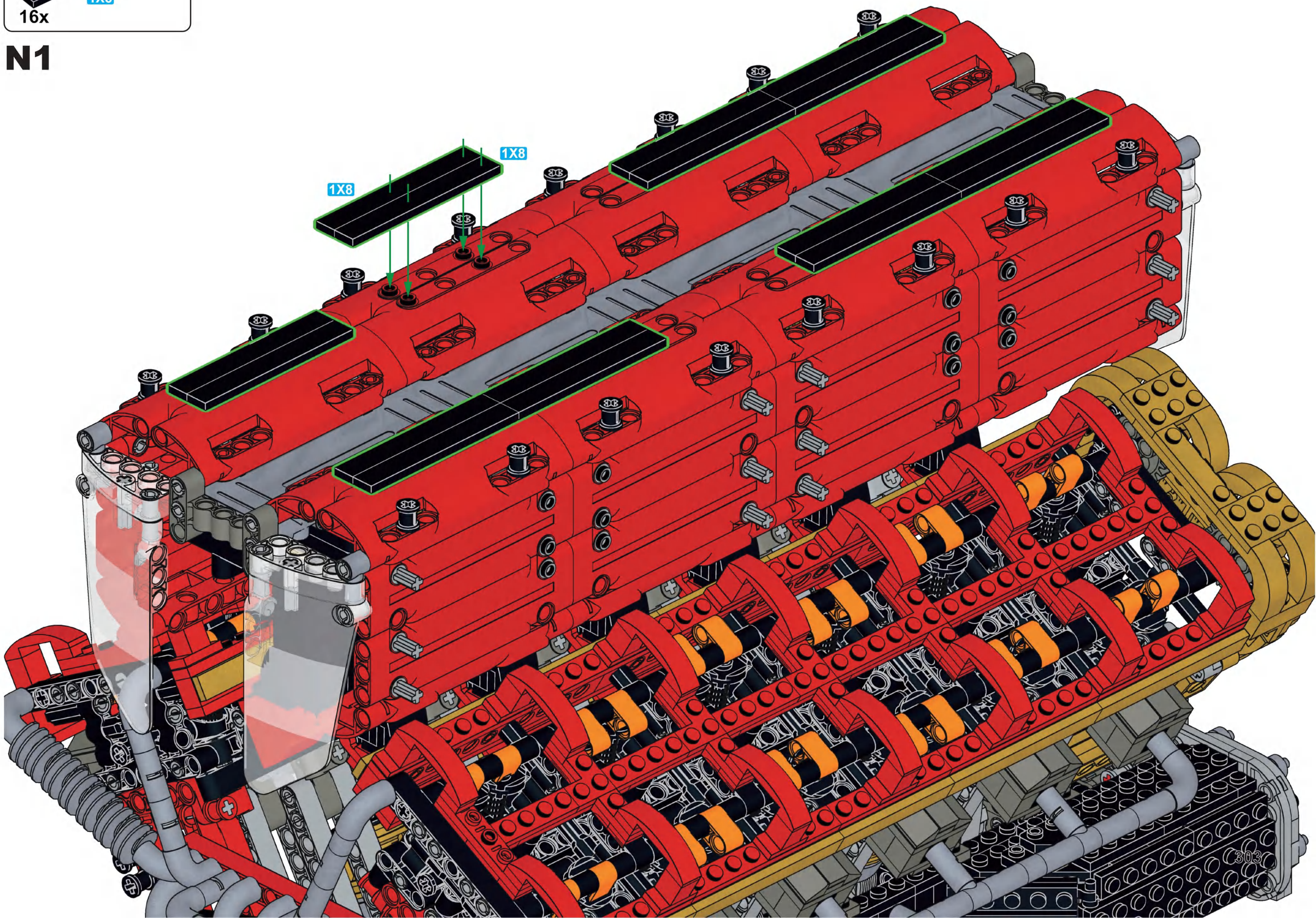

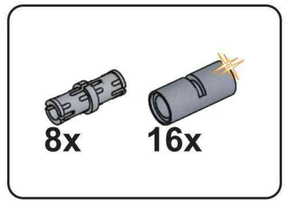

N2

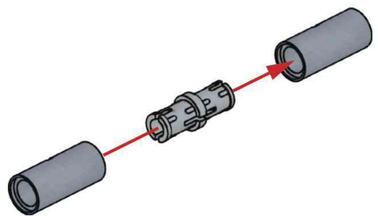

x8

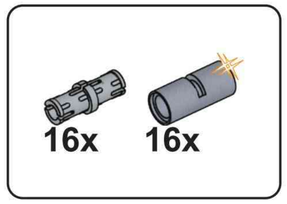

N3

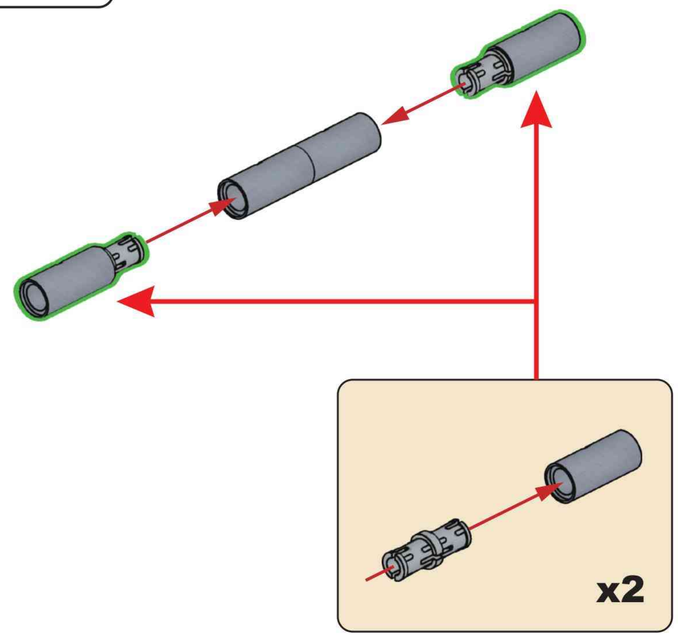

x8

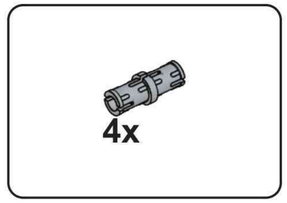

N4

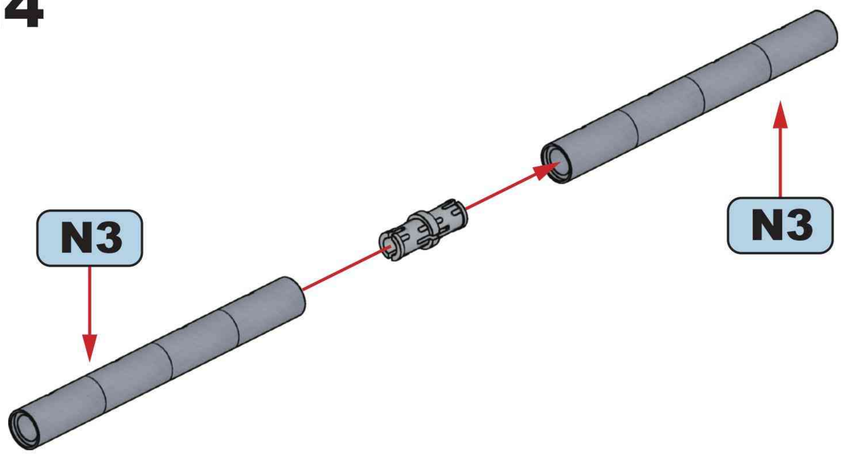

x4

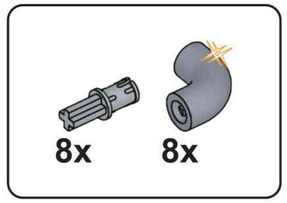

N5

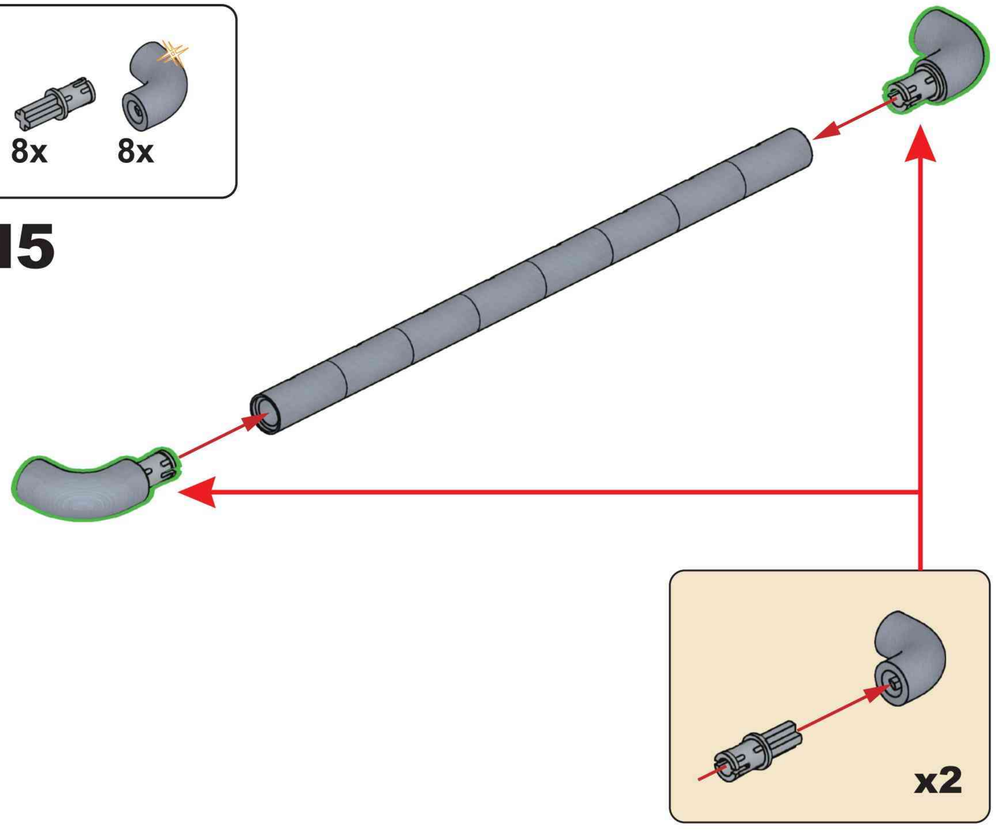

x4

N6

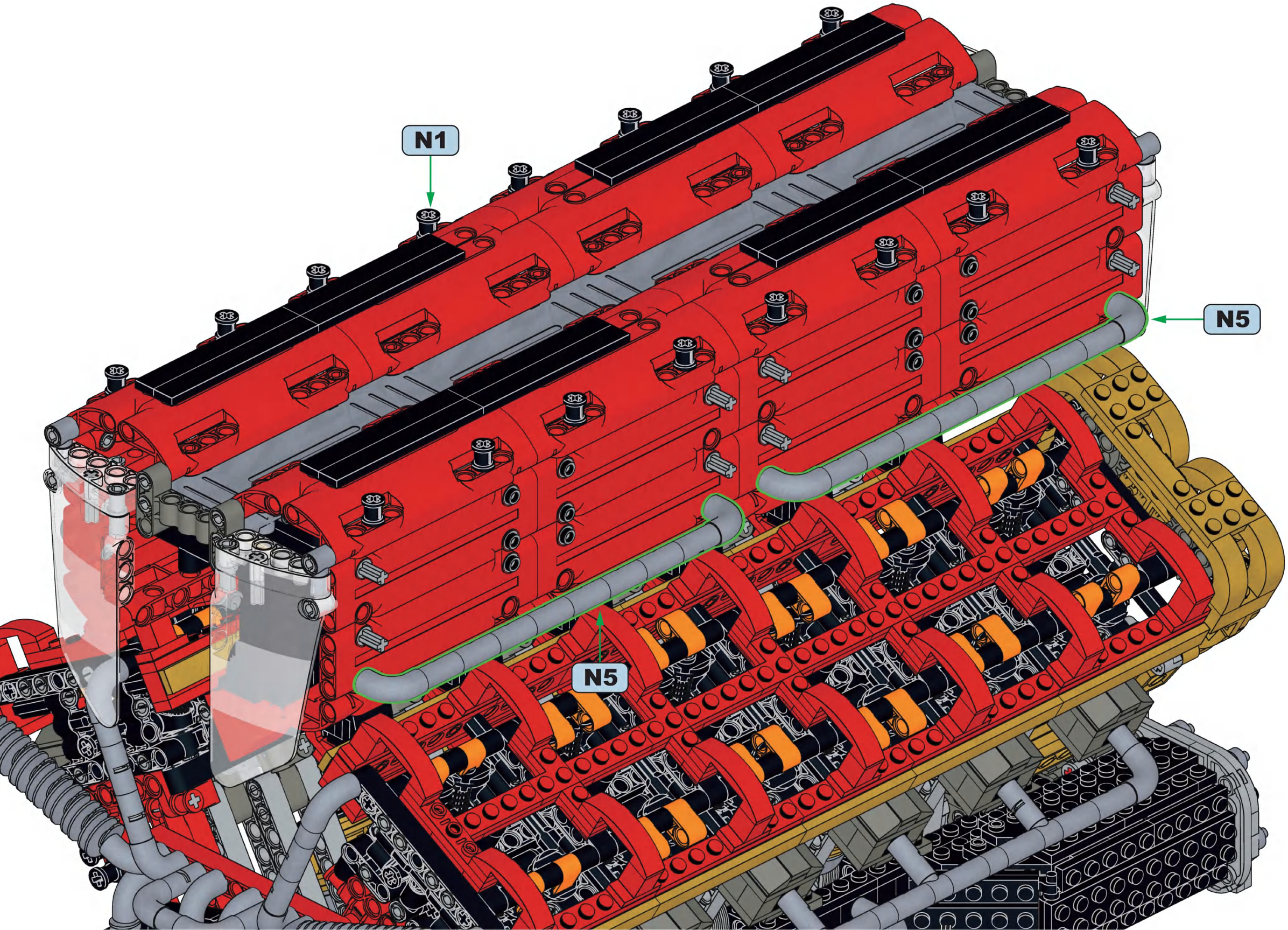

N7

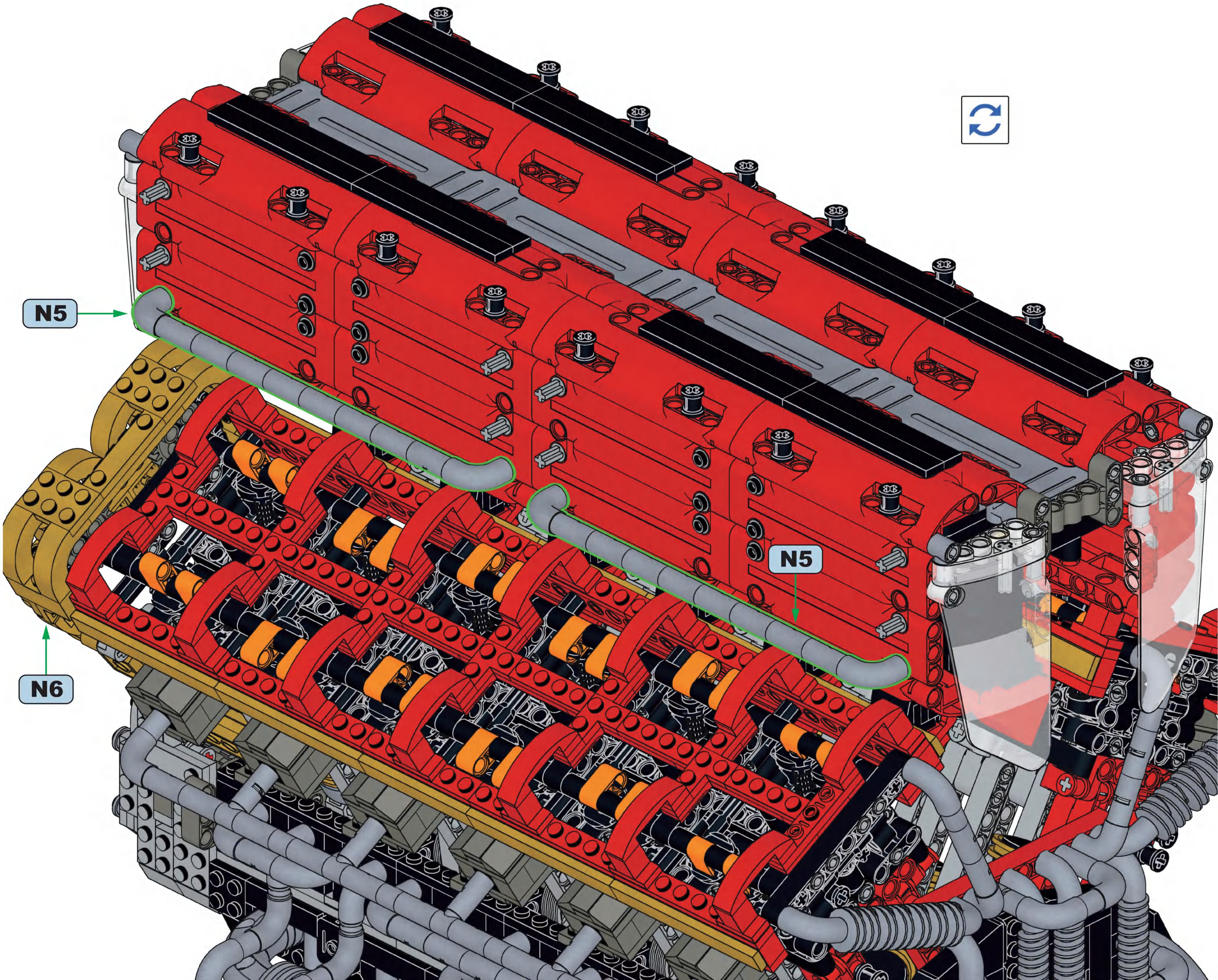

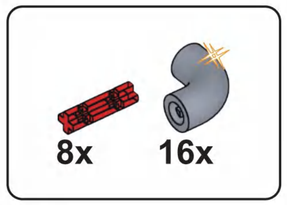

N8

x8

N9

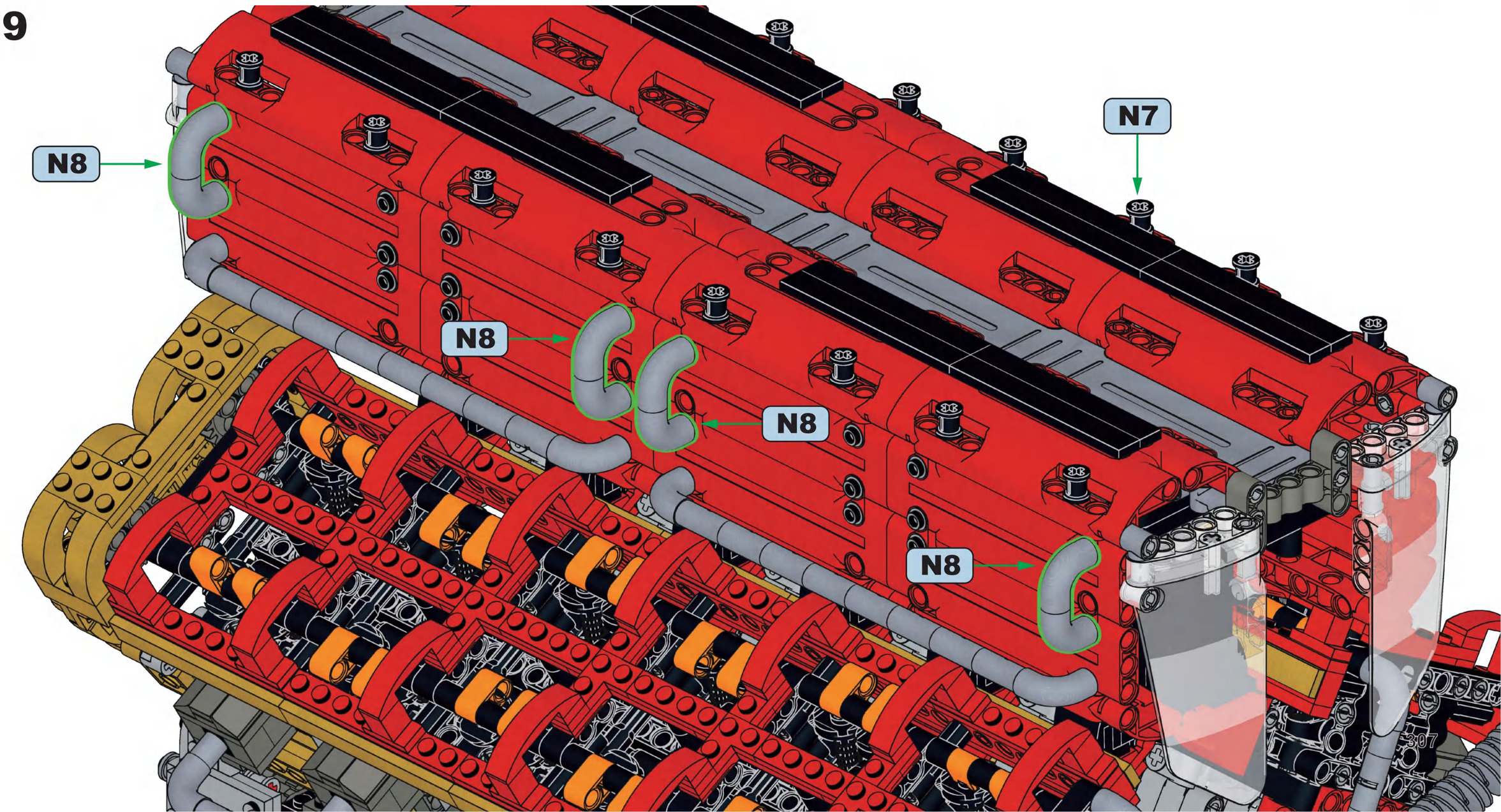

N10

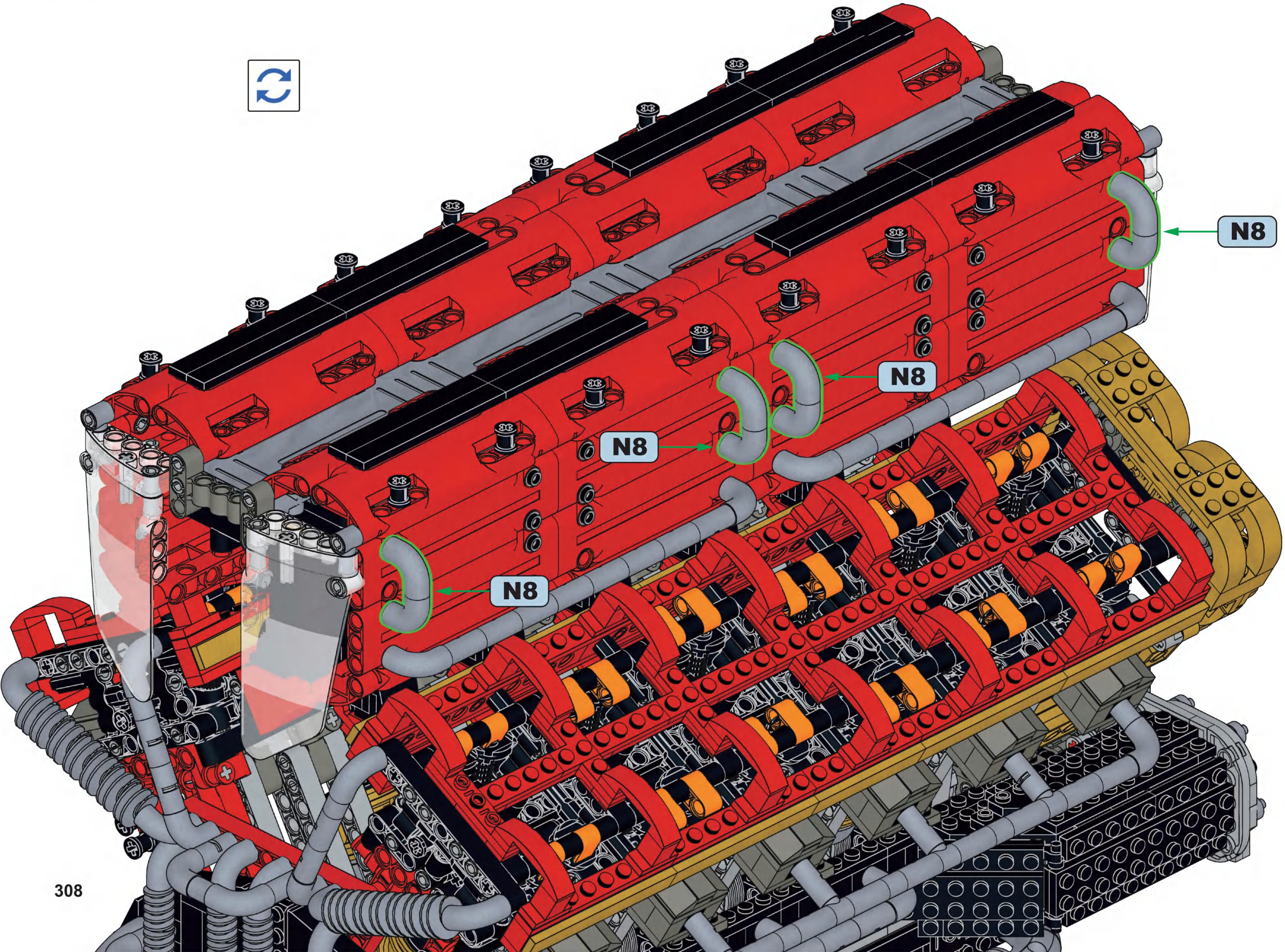

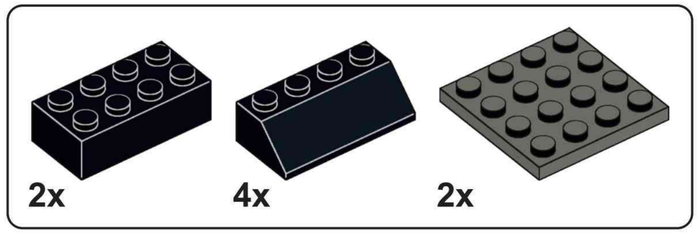

N11

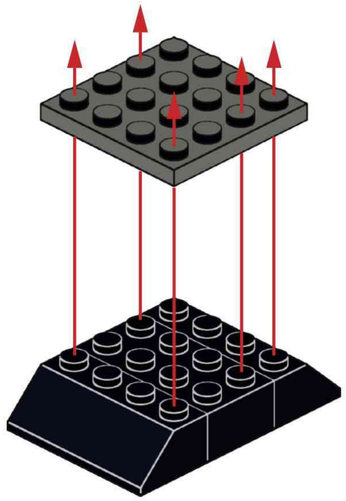

x2

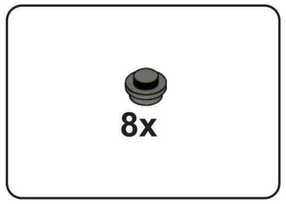

N12

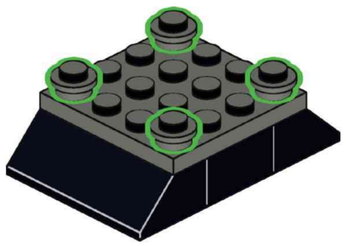

x2

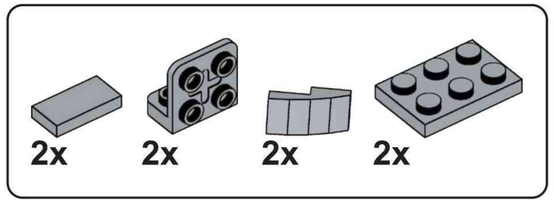

N13

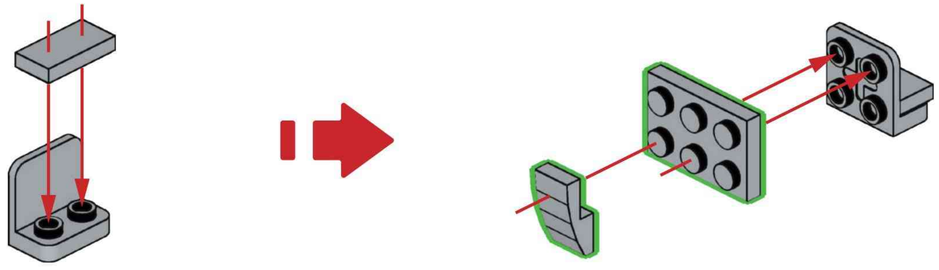

x2

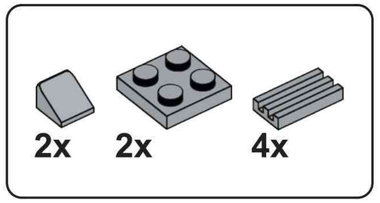

N14

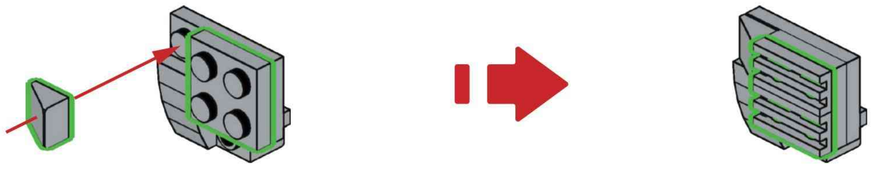

x2

N15

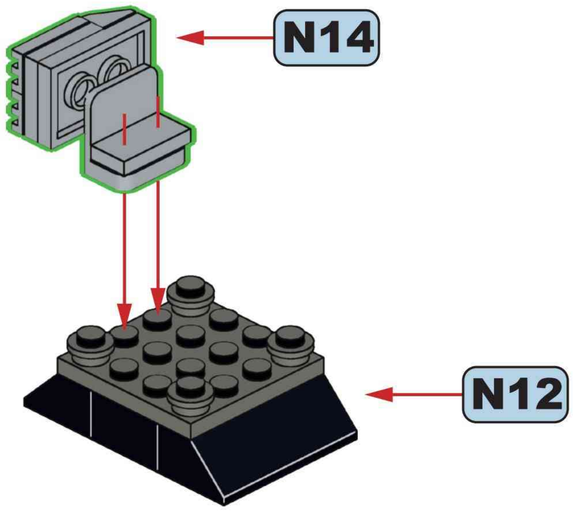

x2

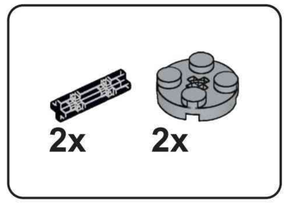

N16

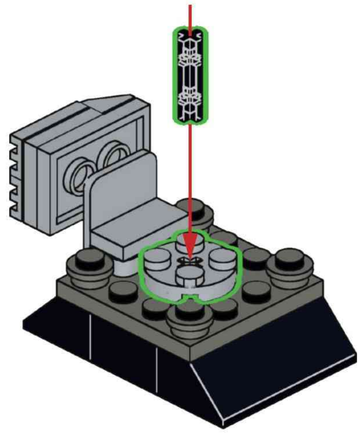

x2

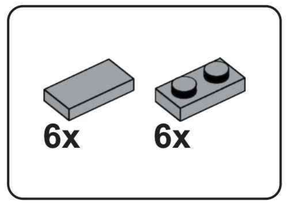

N17

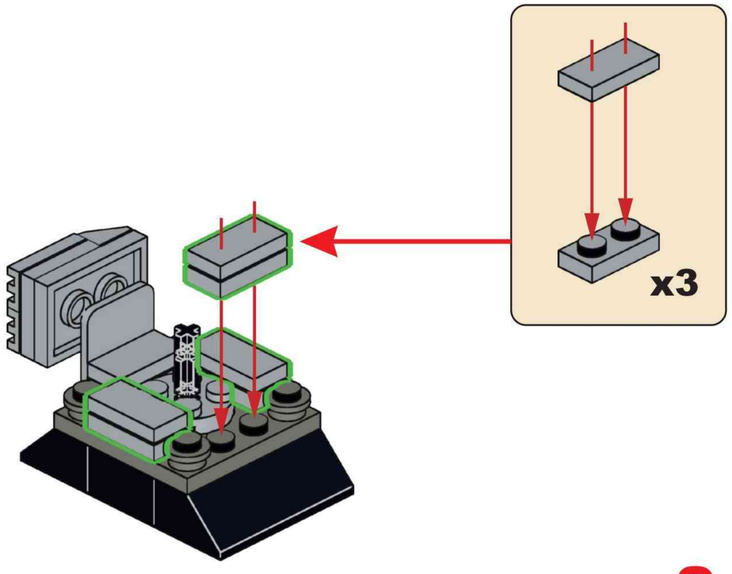

x2

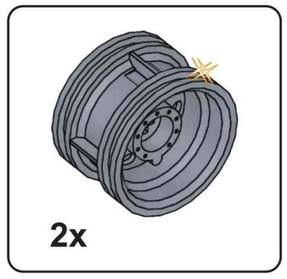

N18

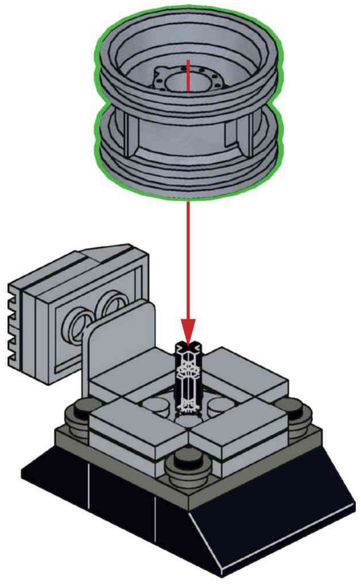

x2

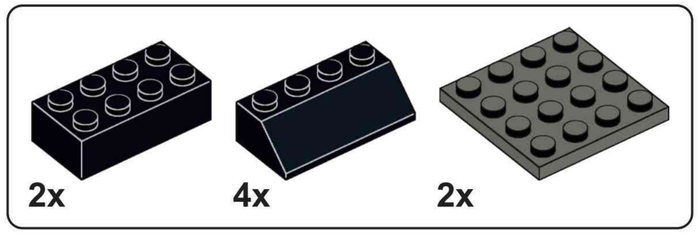

N19

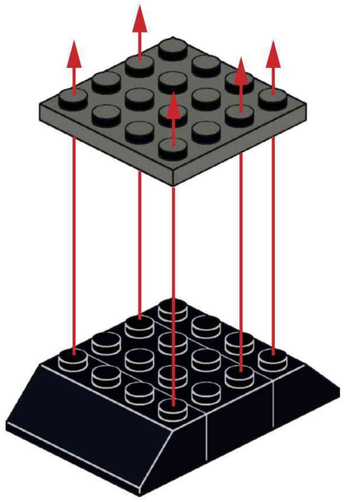

x2

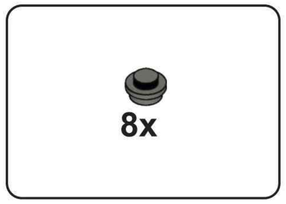

N20

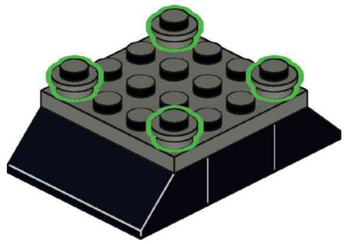

x2

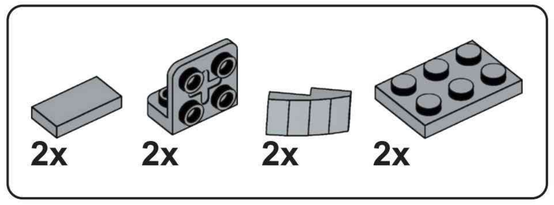

N21

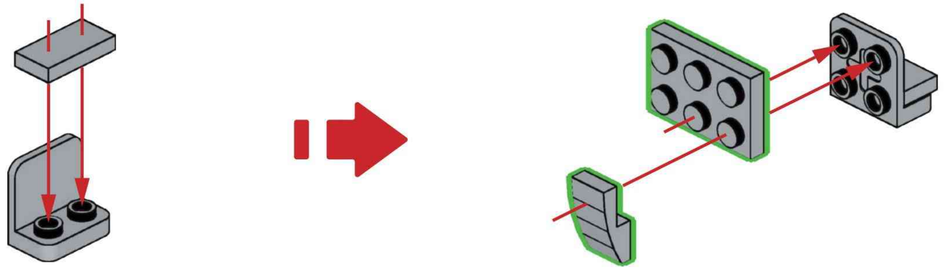

x2

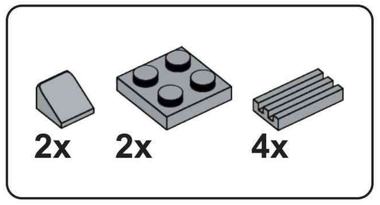

N22

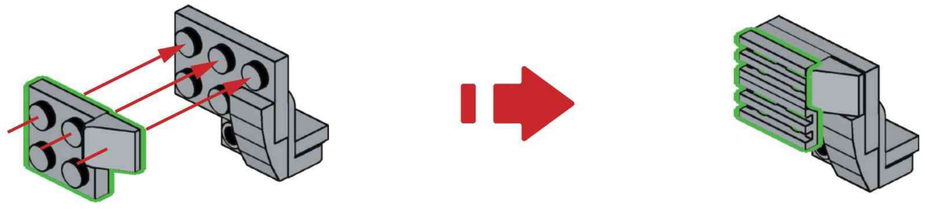

x2

N23

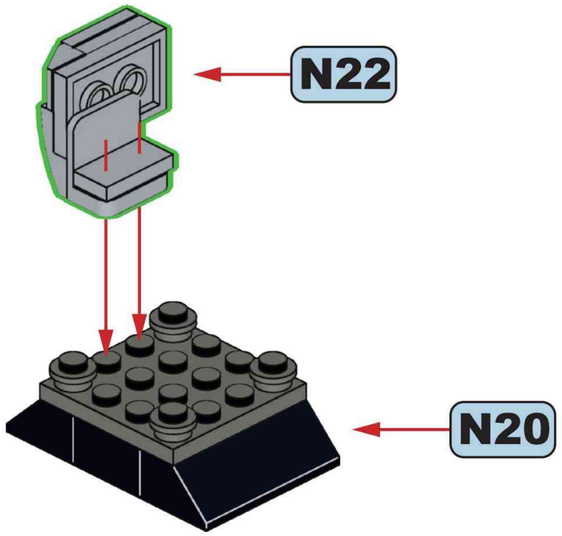

x2

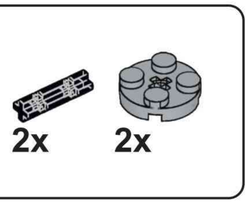

N24

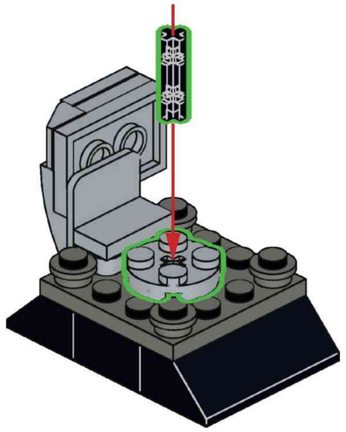

x2

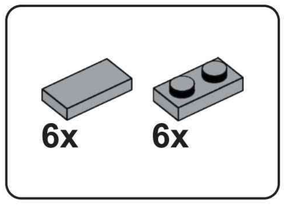

N25

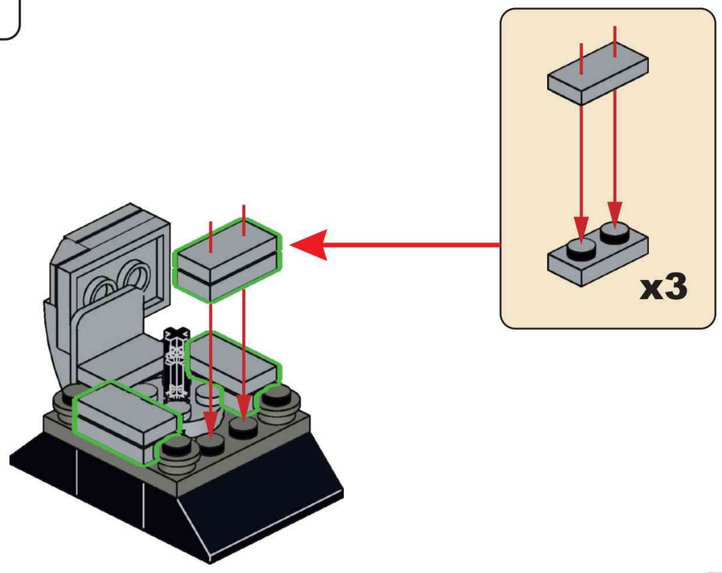

x2

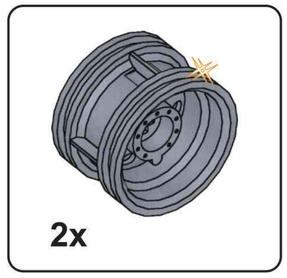

N26

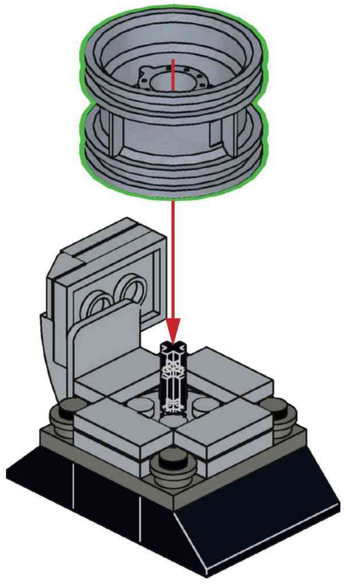

x2

N27

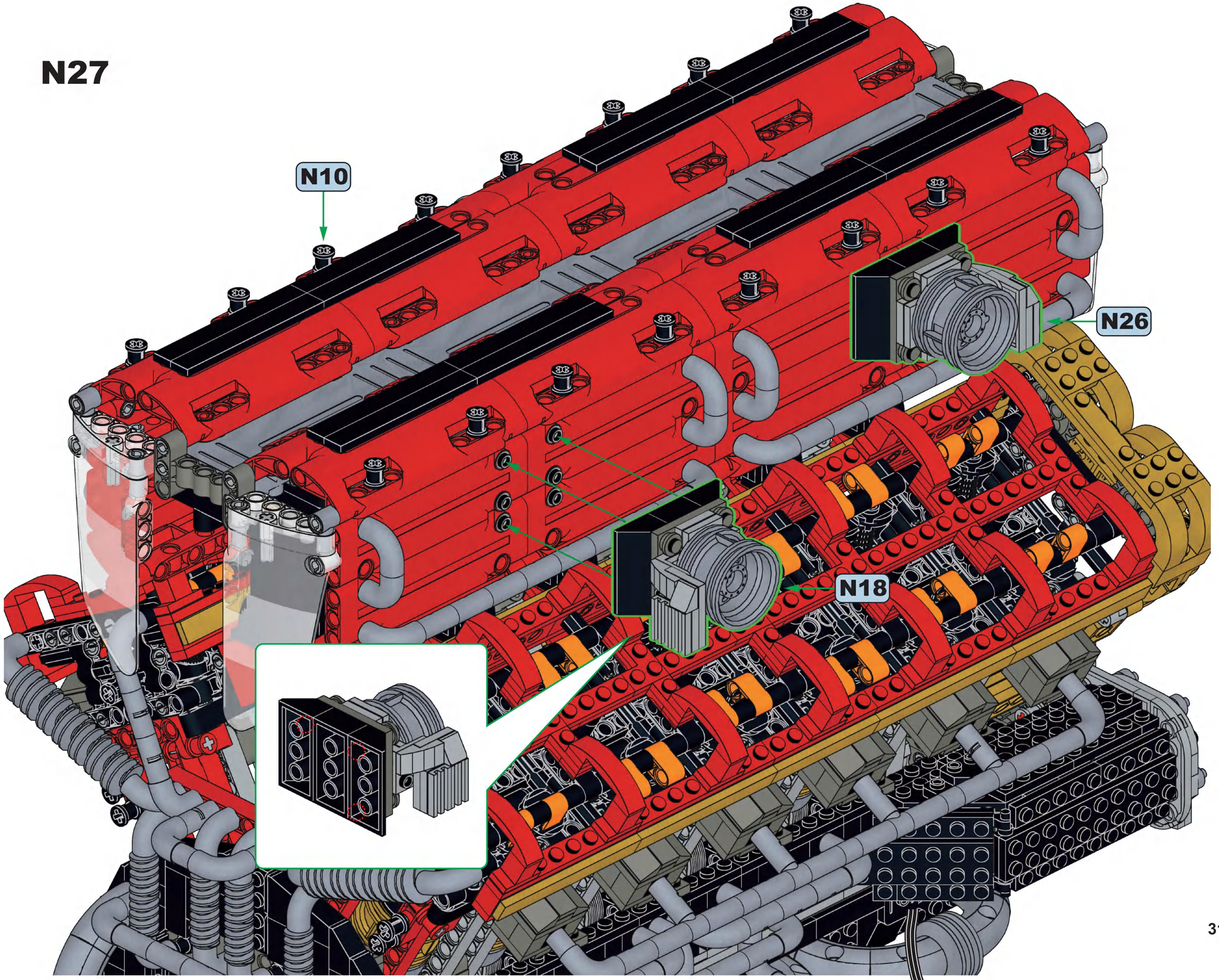

N28

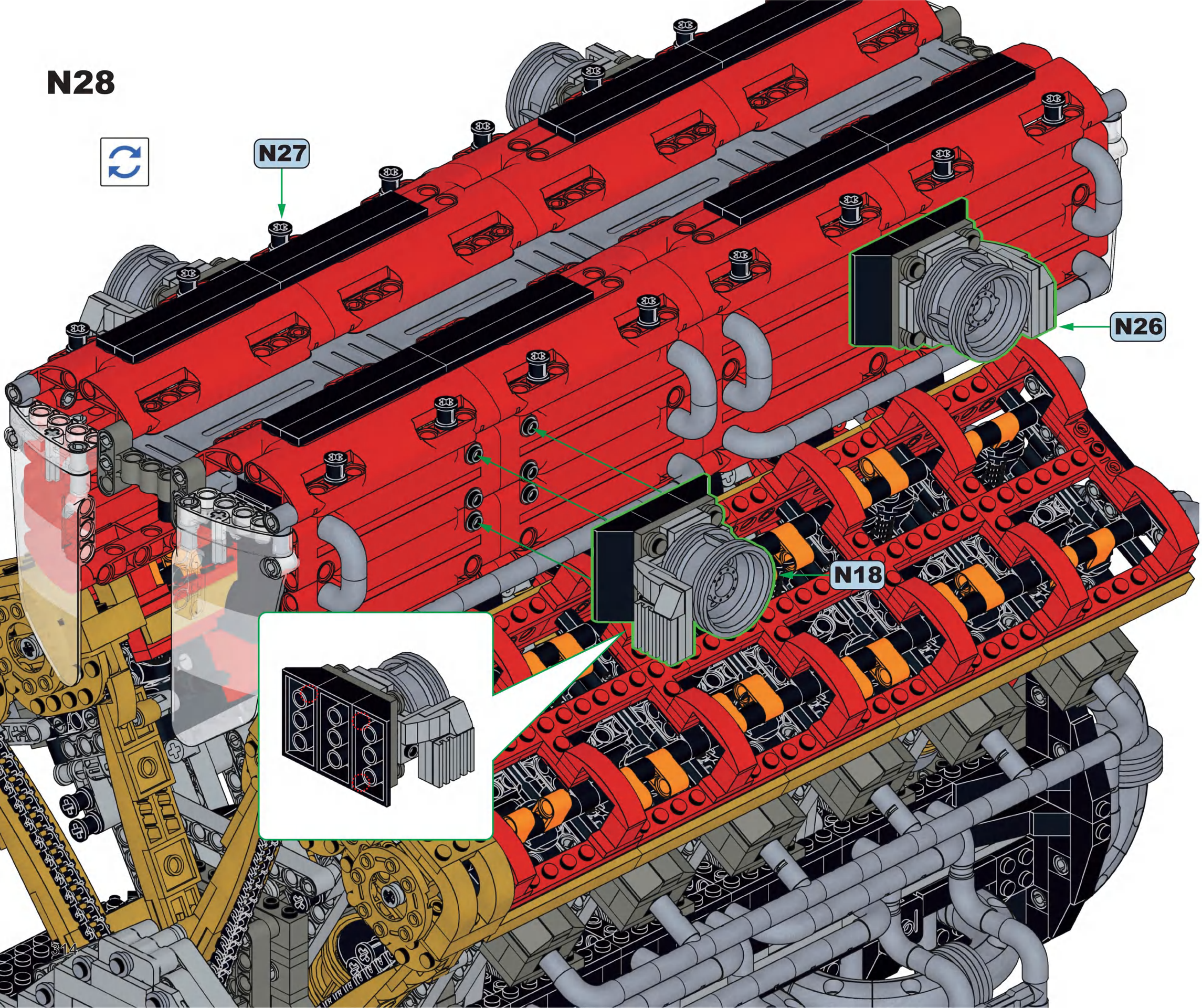

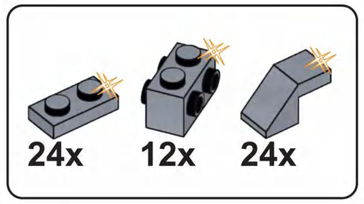

N29

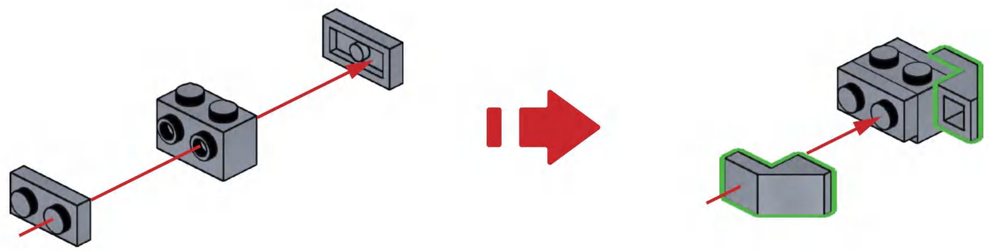

x12

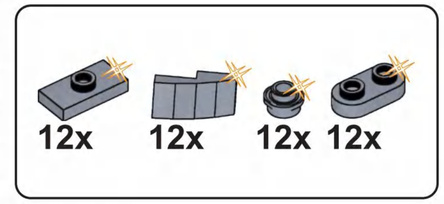

N30

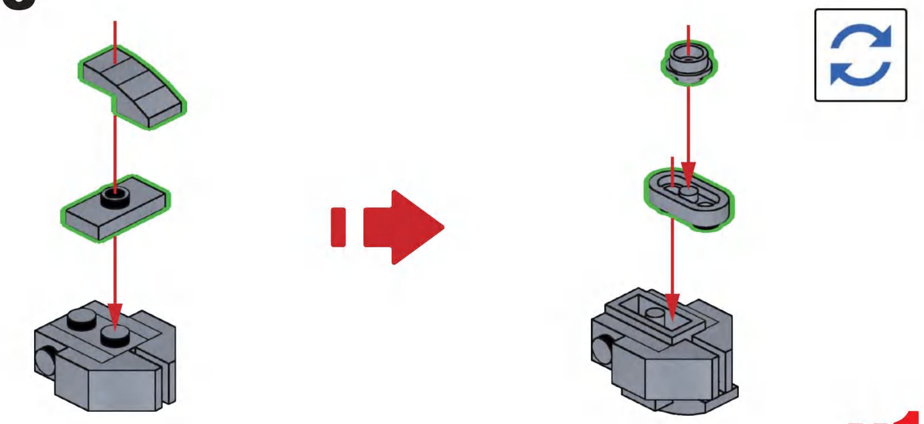

x12

N31

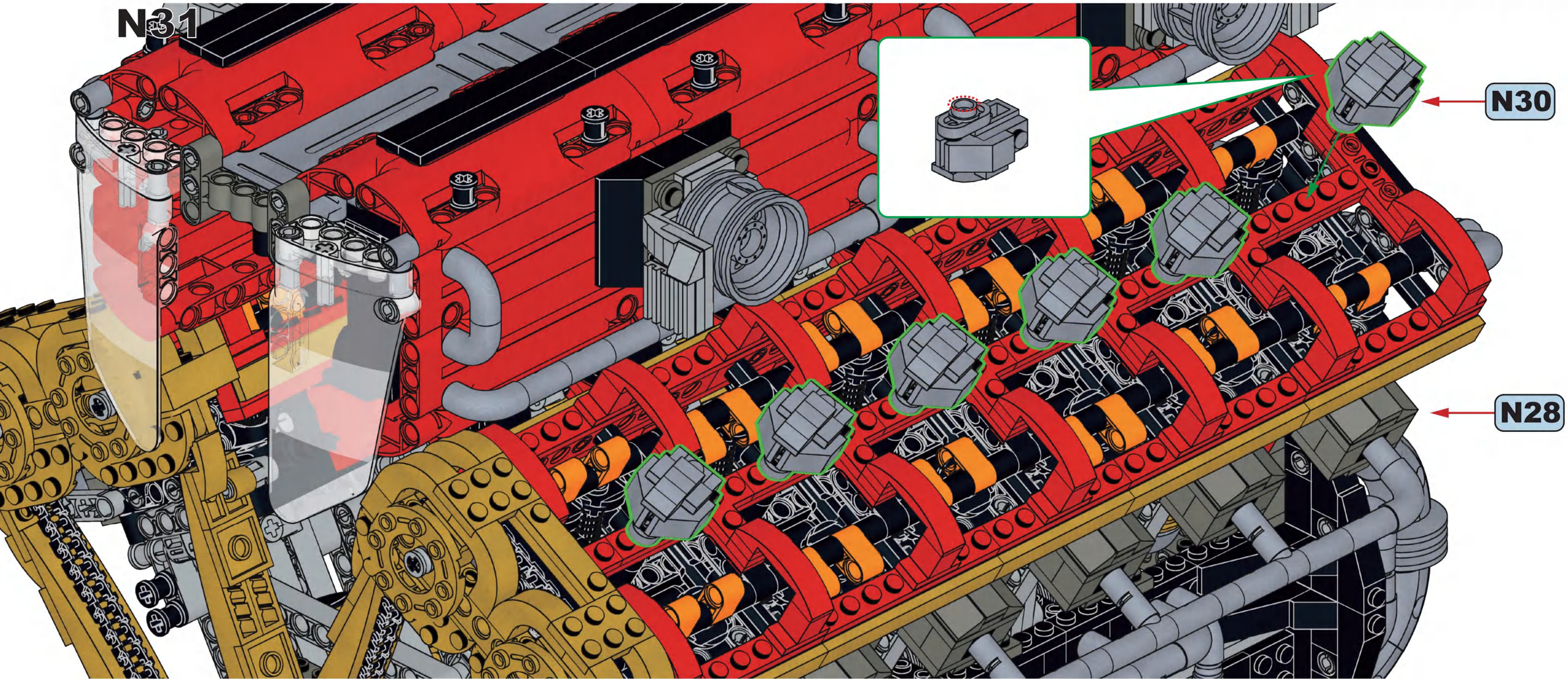

N32

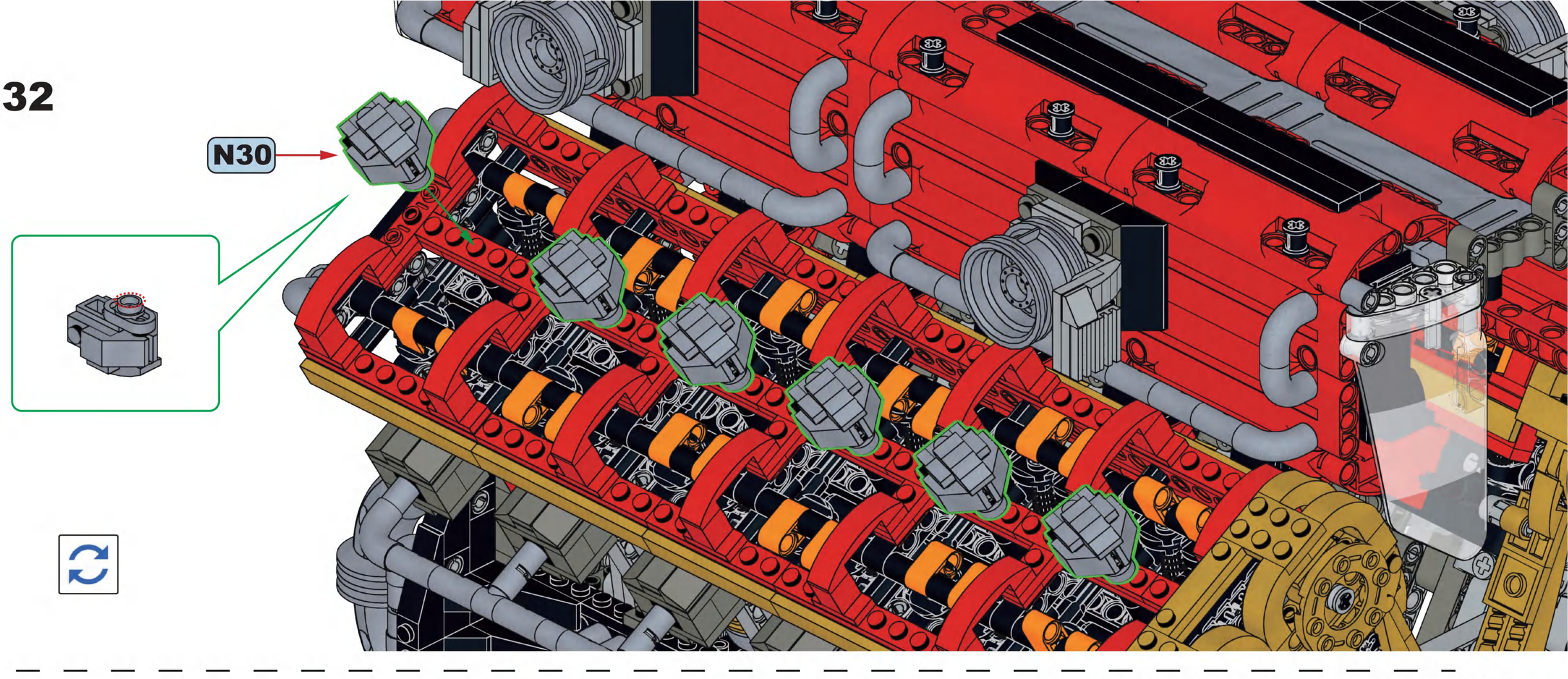

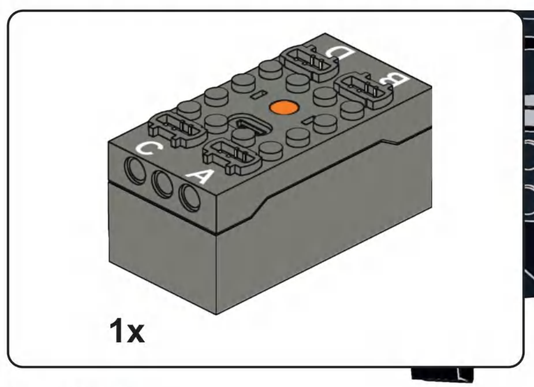

N33

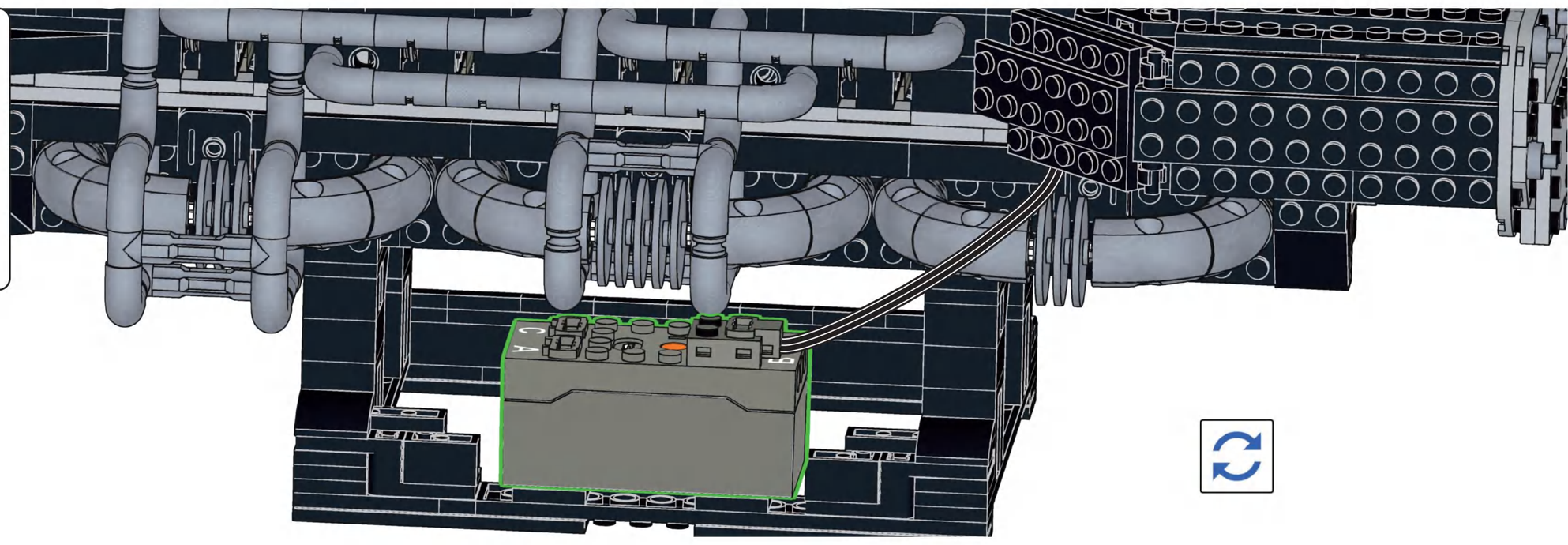

1

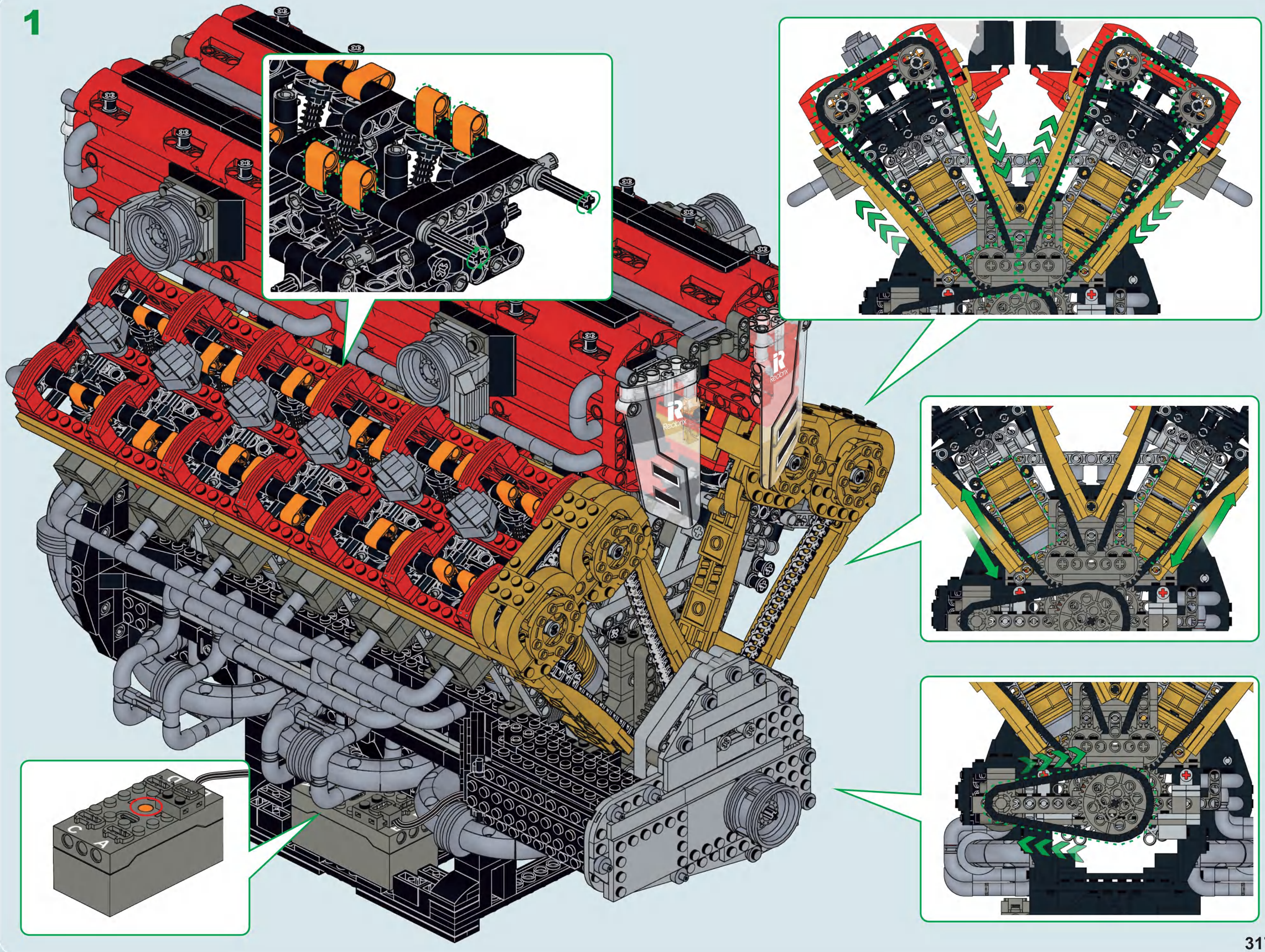

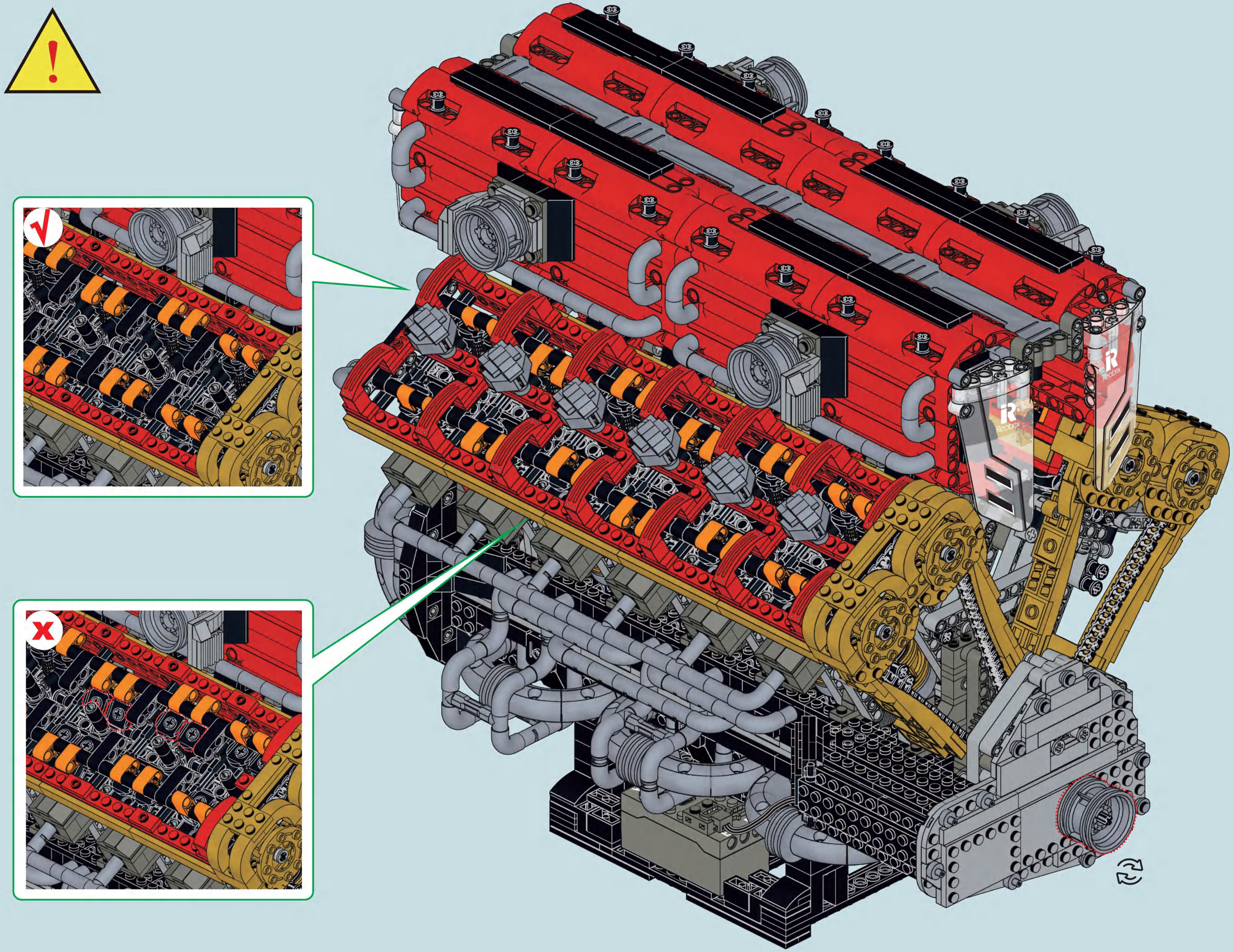

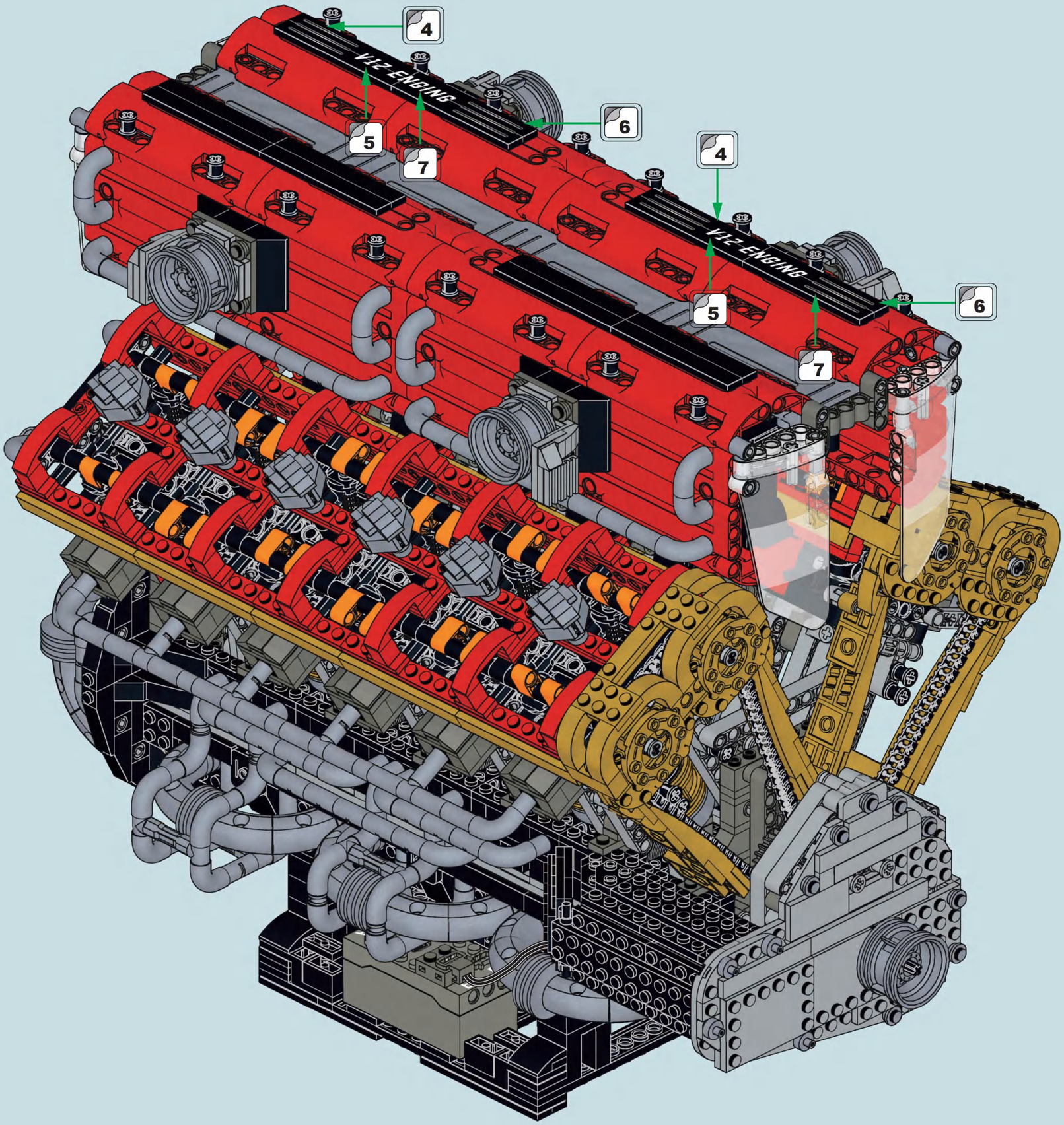
4
V12 ENGINE
5
7
6
4
V12 ENGINE
5
7
6

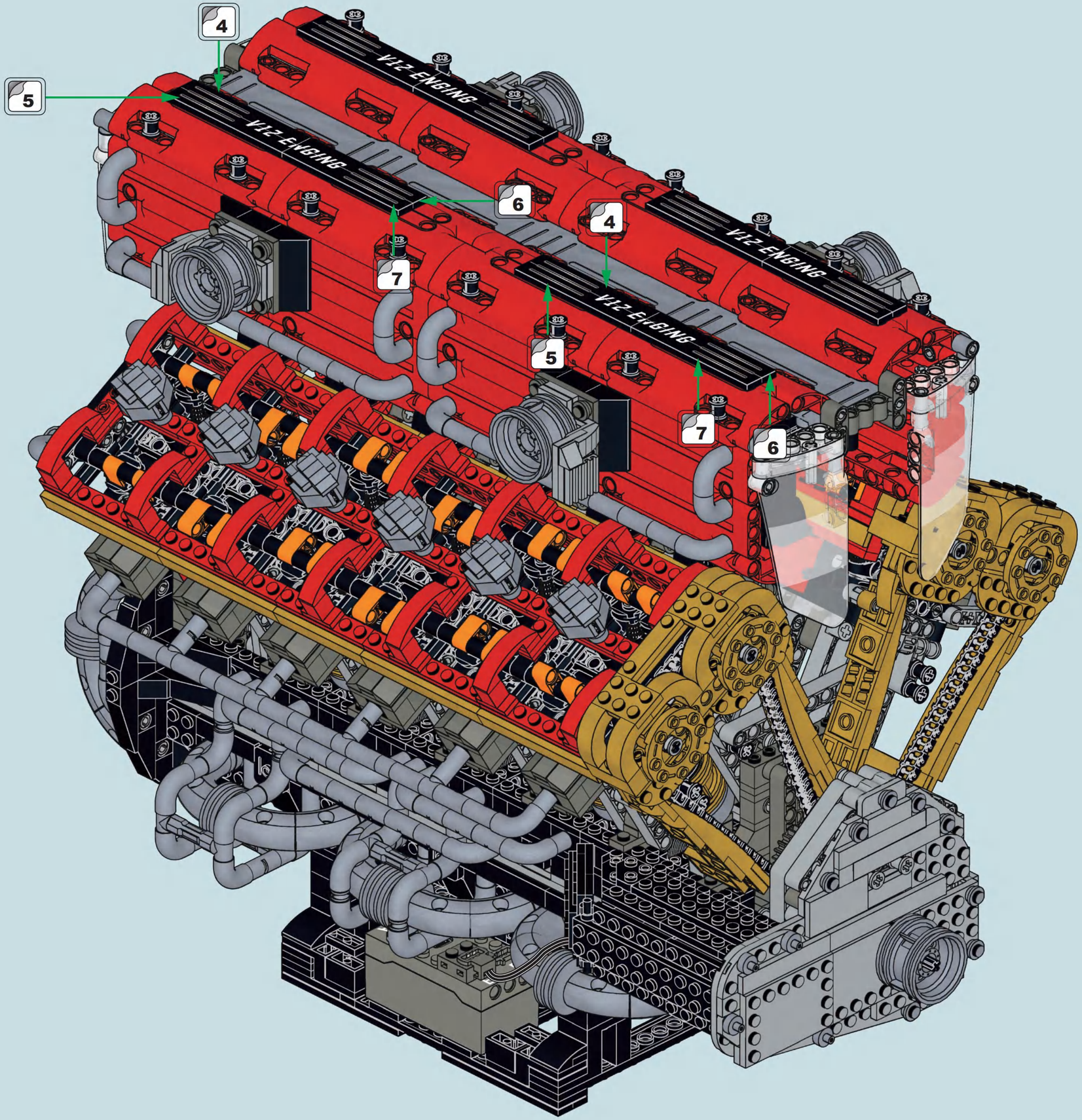
4
5
V12 ENGINE
V12 ENGINE
6
7
4
V12 ENGINE
V12 ENGINE
5
7
6

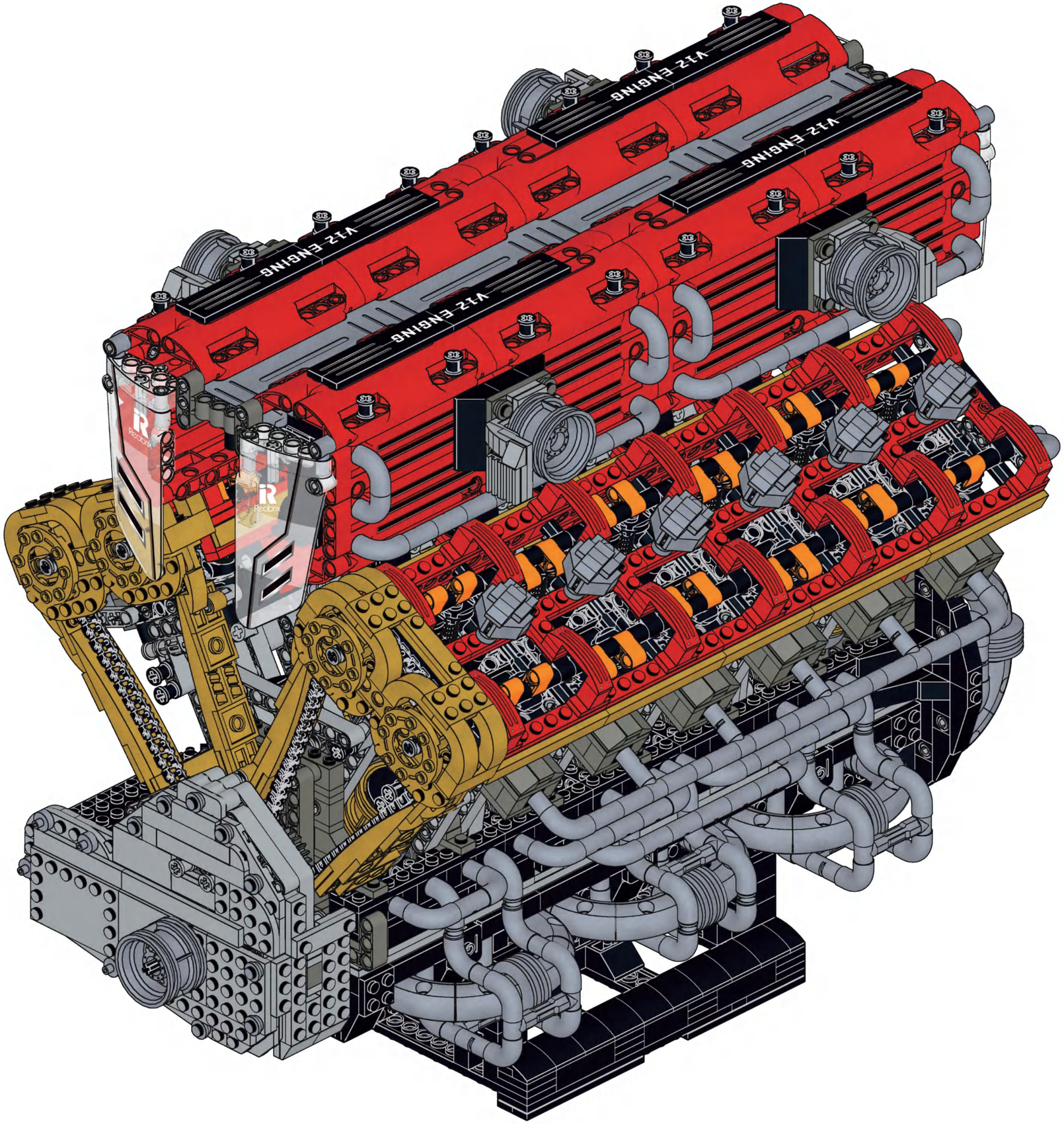
V12 ENGINE
V12 ENGINE
V12 ENGINE
V12 ENGINE

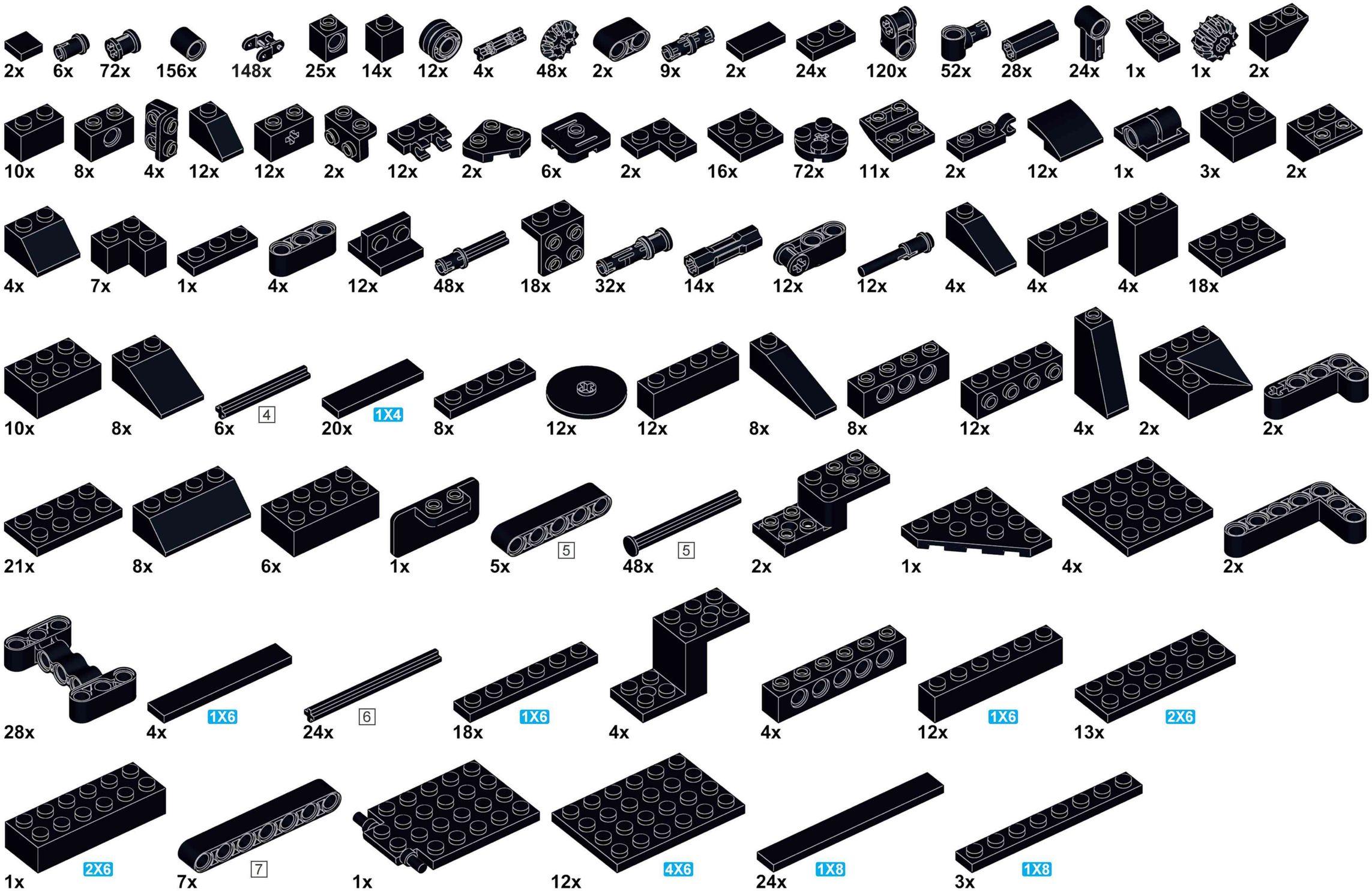
2x
6x
72x
156x
148x
25x
14x
12x
4x
48x
2x
9x
2x
24x
120x
52x
28x
24x
1x
1x
2x
10x
8x
4x
12x
12x
2x
12x
2x
6x
2x
16x
72x
11x
2x
12x
1x
3x
2x
4x
7x
1x
4x
12x
48x
18x
32x
14x
12x
12x
4x
4x
4x
18x
10x
8x
6x
4
20x
1X4
8x
12x
12x
8x
8x
12x
4x
2x
2x
21x
8x
6x
1x
5x
5
48x
5
2x
1x
4x
2x
28x
4x
1X6
24x
6
18x
1X6
4x
4x
12x
1X6
13x
2X6
1x
2X6
7x
7
1x
12x
4X6
24x
1X8
3x
1X8

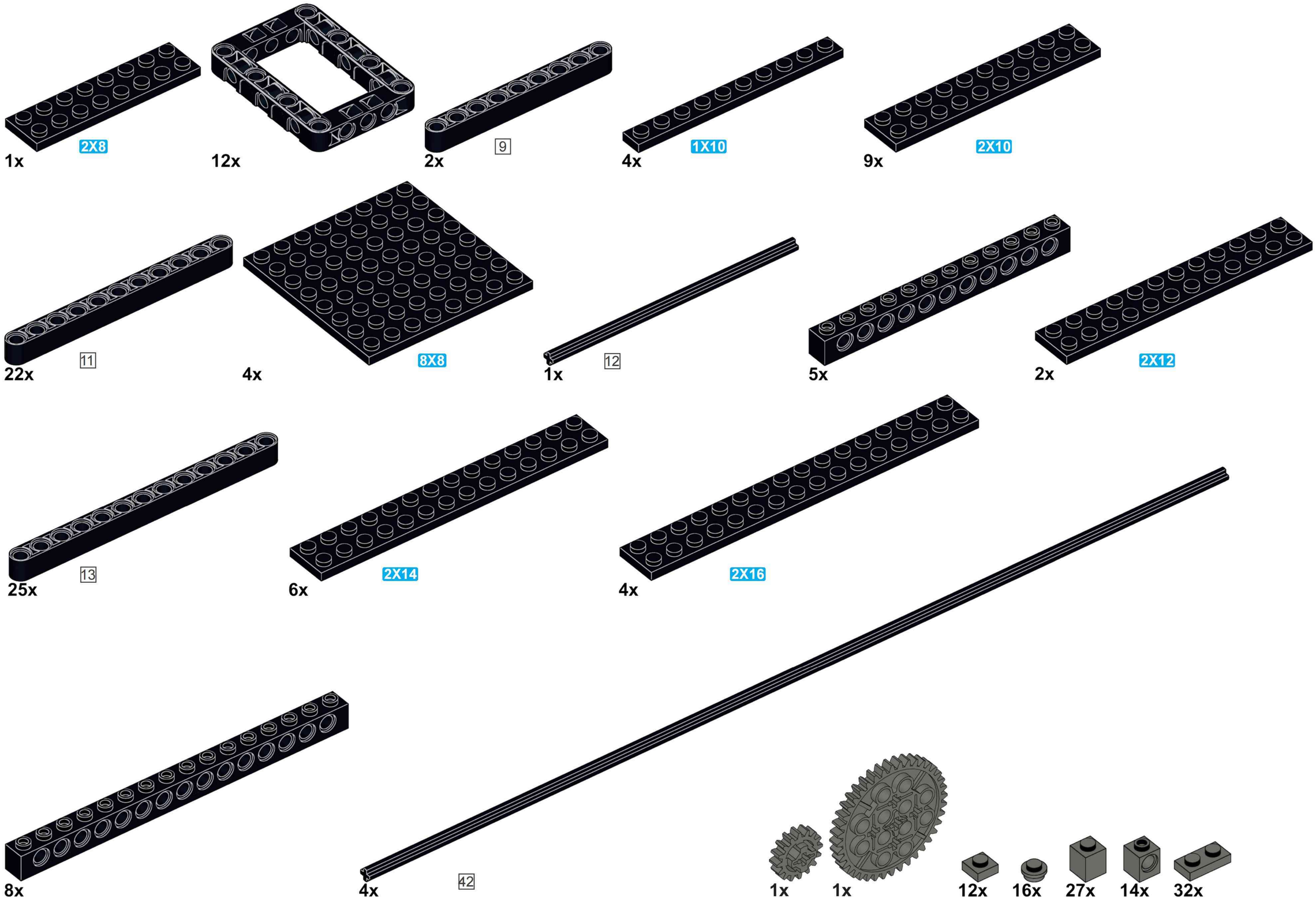
1x
2X8
12x
2x
9
4x
1X10
9x
2X10
22x
11
4x
8X8
1x
12
5x
2x
2X12
25x
13
6x
2X14
4x
2X16
8x
4x
42
1x
1x
12x
16x
27x
14x
32x

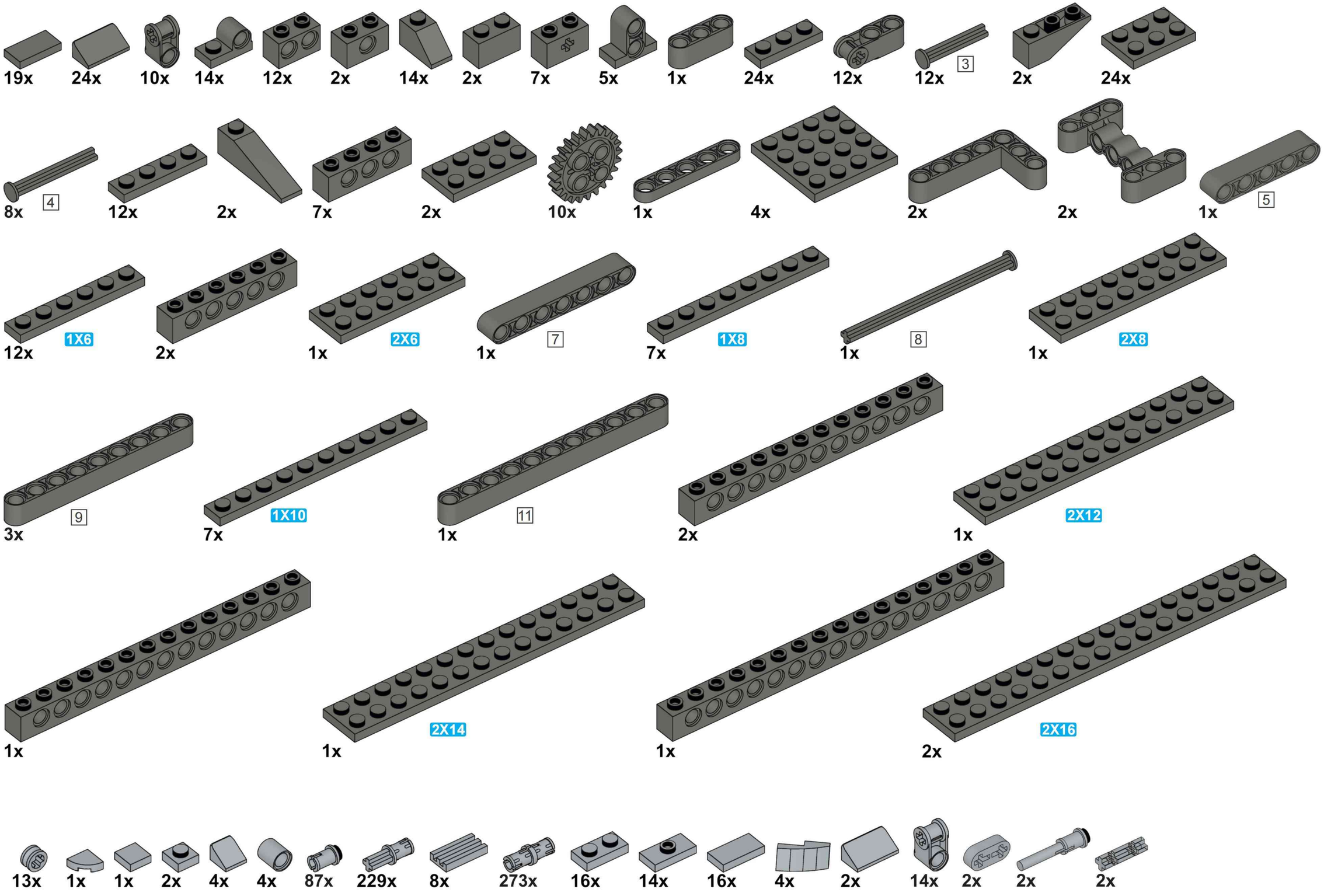
19x
24x
10x
14x
12x
2x
14x
2x
7x
5x
1x
24x
12x
12x
3
2x
24x
8x
4
12x
2x
7x
2x
10x
1x
4x
2x
2x
1x
5
12x
1X6
2x
1x
2X6
1x
7
7x
1X8
1x
8
1x
2X8
9
3x
1X10
7x
11
1x
2x
2X12
1x
1x
2X14
1x
1x
2X16
2x
13x
1x
1x
2x
4x
4x
87x
229x
8x
273x
16x
14x
16x
4x
2x
14x
2x
2x
2x

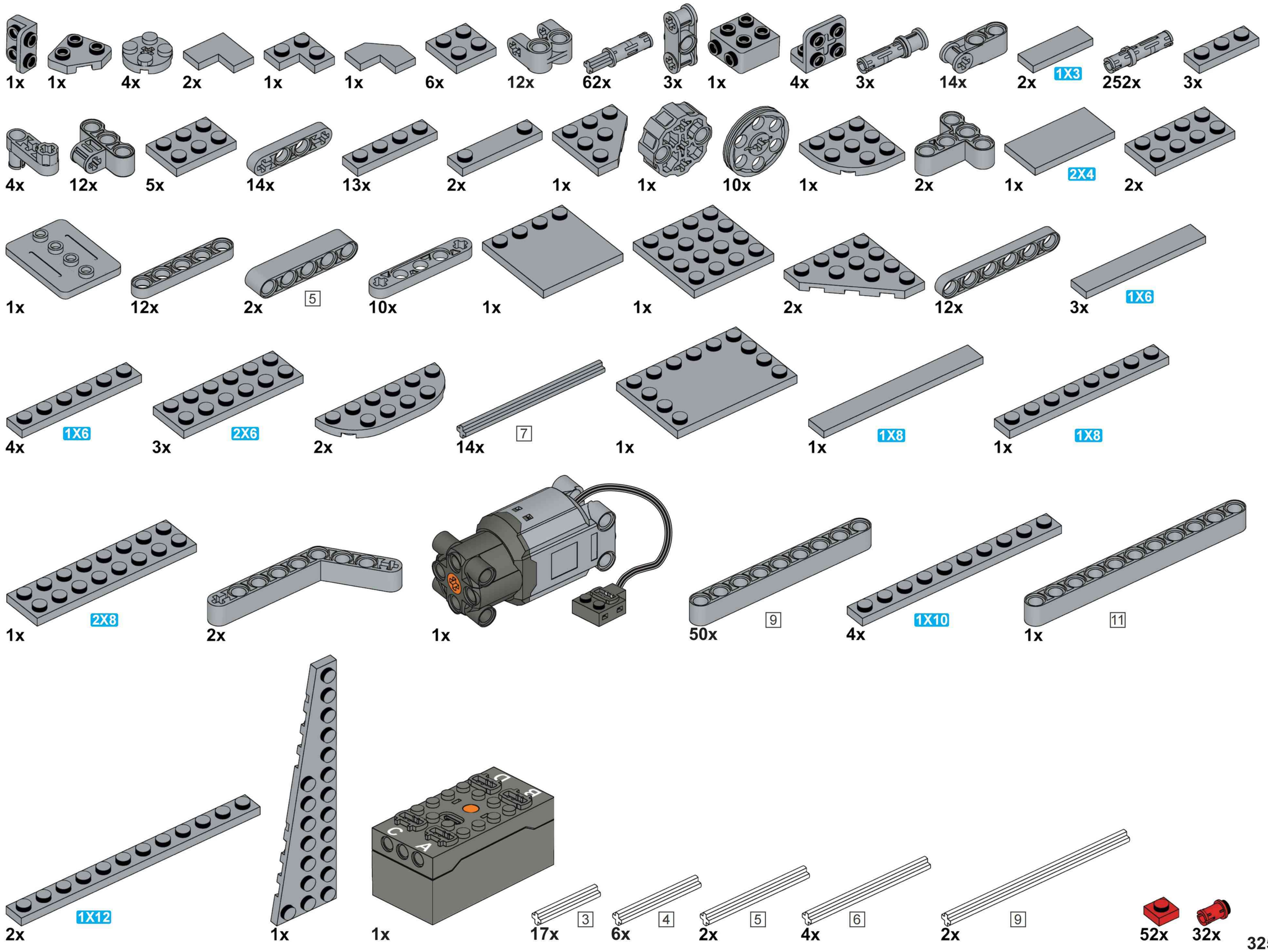
1x
1x
4x
2x
1x
1x
6x
12x
62x
3x
1x
4x
3x
14x
2x
1X3
252x
3x
4x
12x
5x
14x
13x
2x
1x
1x
10x
1x
2x
1x
2X4
2x
1x
12x
2x
5
10x
1x
1x
2x
12x
3x
1X6
4x
1X6
3x
2X6
2x
14x
7
1x
1x
1X8
1x
1X8
1x
2X8
2x
1x
50x
9
4x
1X10
1x
11
2x
1X12
1x
1x
A
B
C
17x
3
6x
4
2x
5
4x
6
2x
9
52x
32x

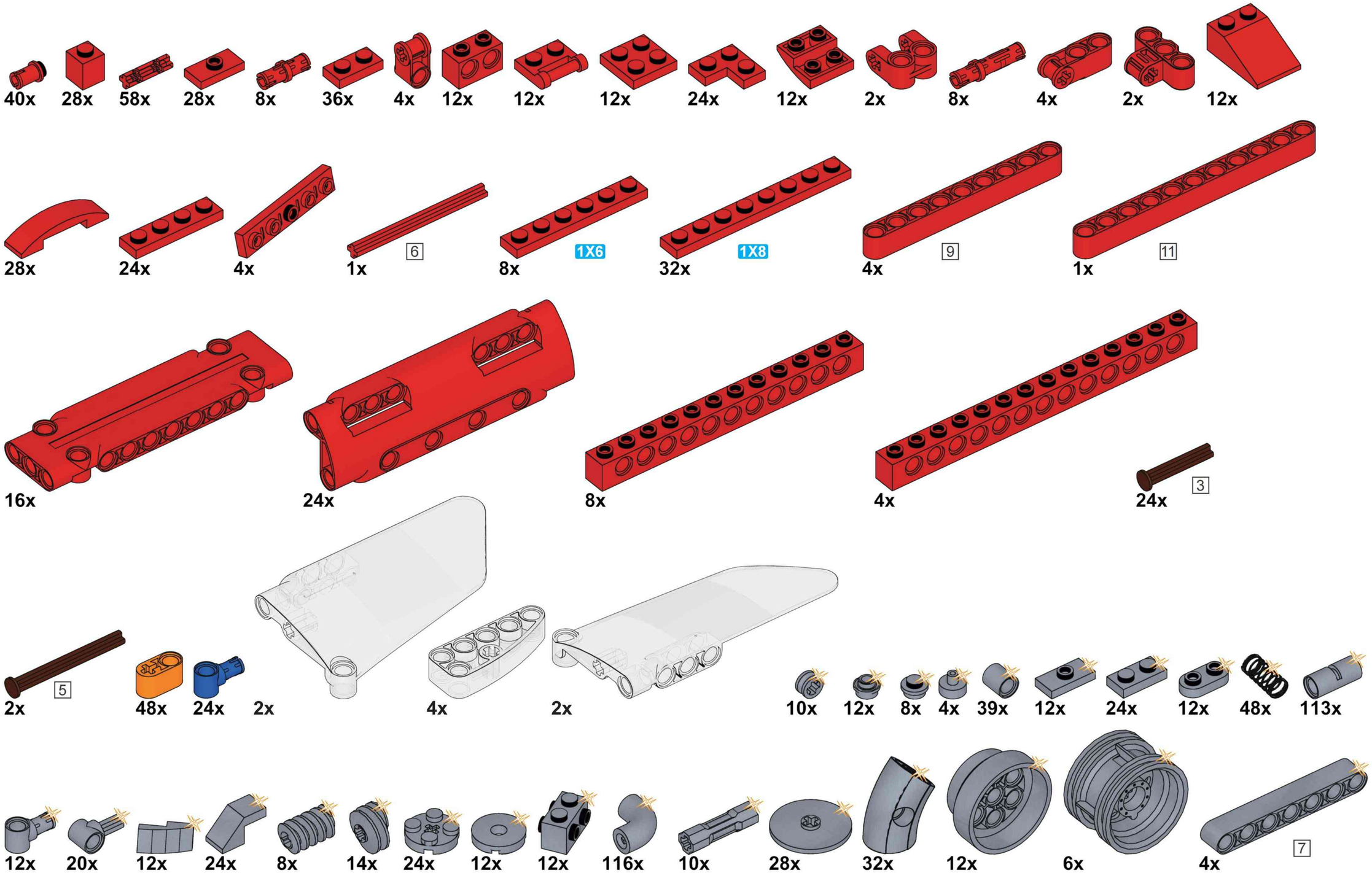
40x
28x
58x
28x
8x
36x
4x
12x
12x
12x
24x
12x
2x
8x
4x
2x
12x
28x
24x
4x
1x
6
8x
1X6
32x
1X8
4x
9
1x
11
16x
24x
8x
4x
24x
3
2x
5
48x
24x
2x
4x
2x
10x
12x
8x
4x
39x
12x
24x
12x
48x
113x
12x
20x
12x
24x
8x
14x
24x
12x
12x
116x
10x
28x
32x
12x
6x
4x
7

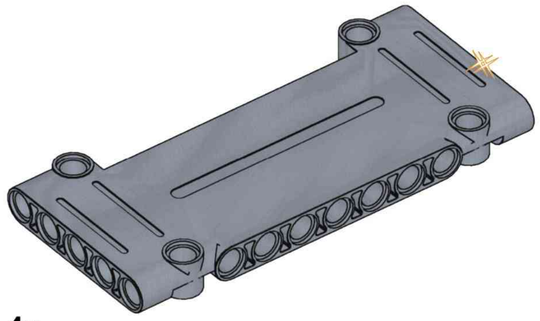
4x

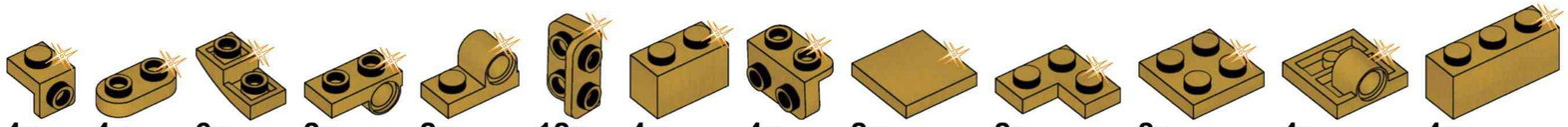
4x 4x 6x 2x 2x 12x 4x 4x 2x 2x 8x 4x 4x

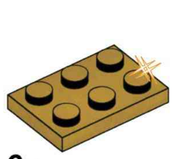
6x

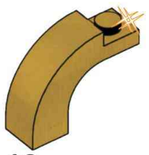
12x

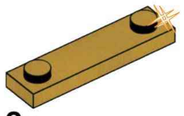
2x

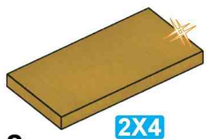

2x

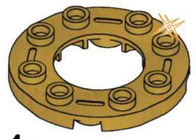
4x

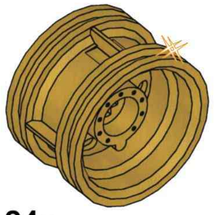
24x

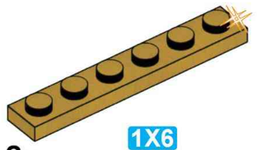

2x

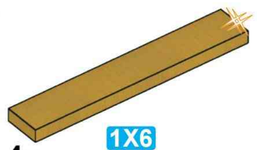

4x

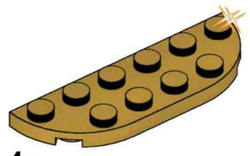
4x

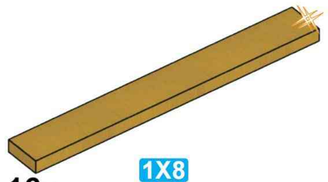

16x

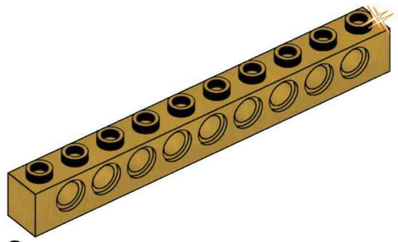
2x

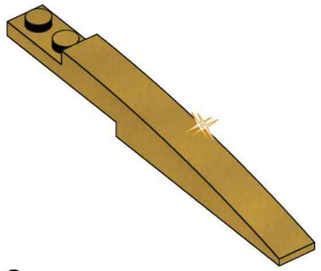
8x

Reobrix

NO.33017

V12

ENGINE