Reobrix

NO.11042

TECHNOLOGIE

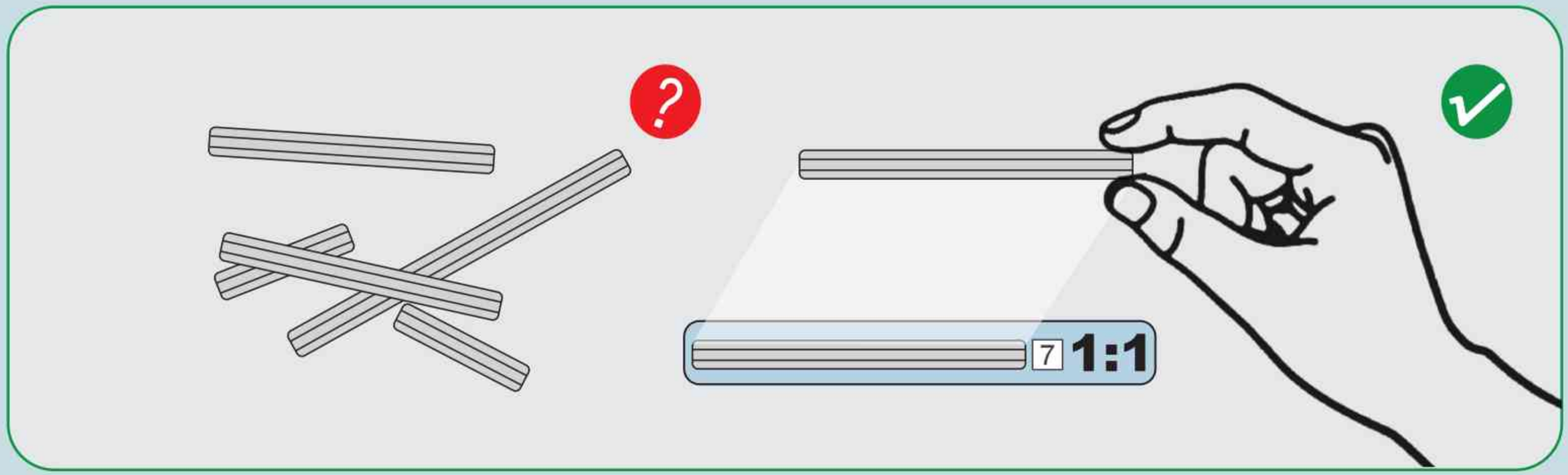
?
7
1:1

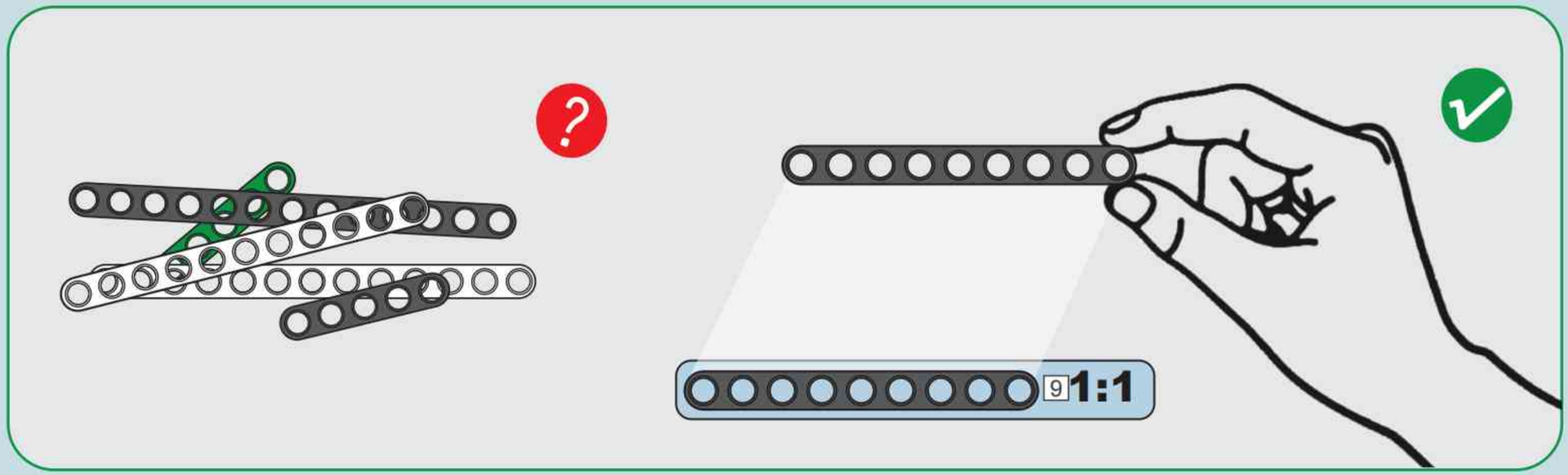
?
9
1:1

1

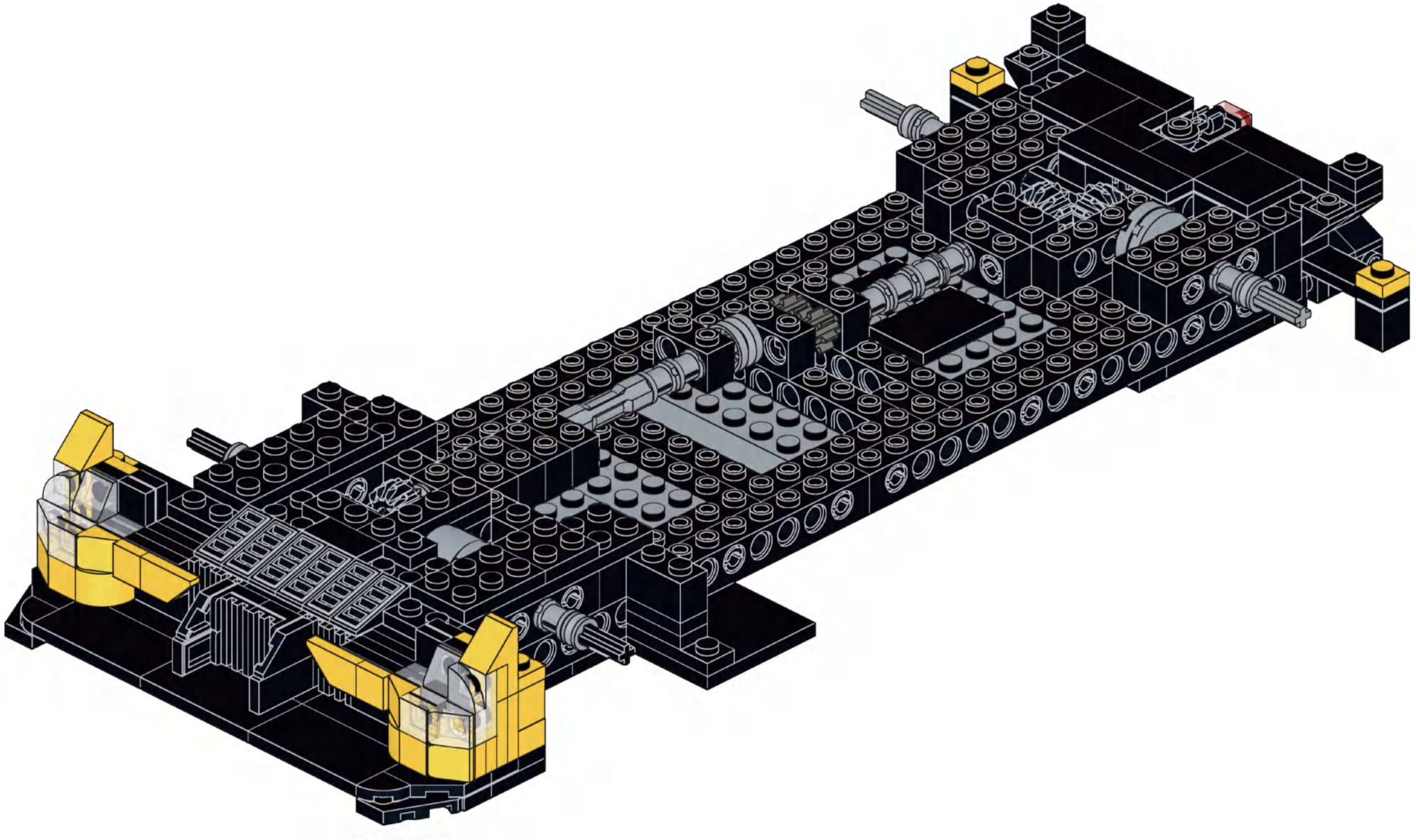

A

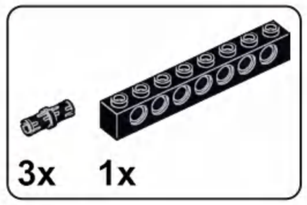

A1

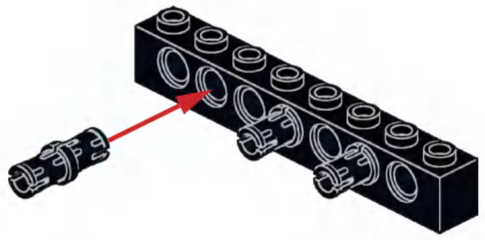

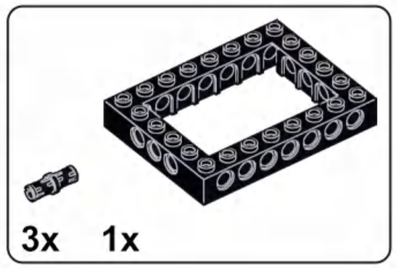

A2

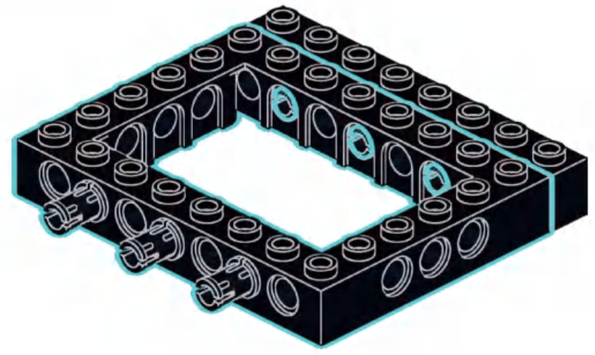

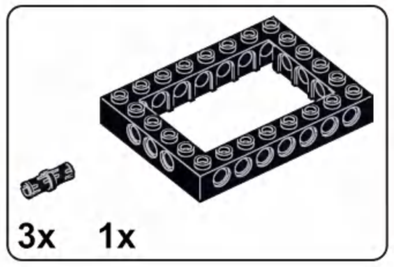

A3

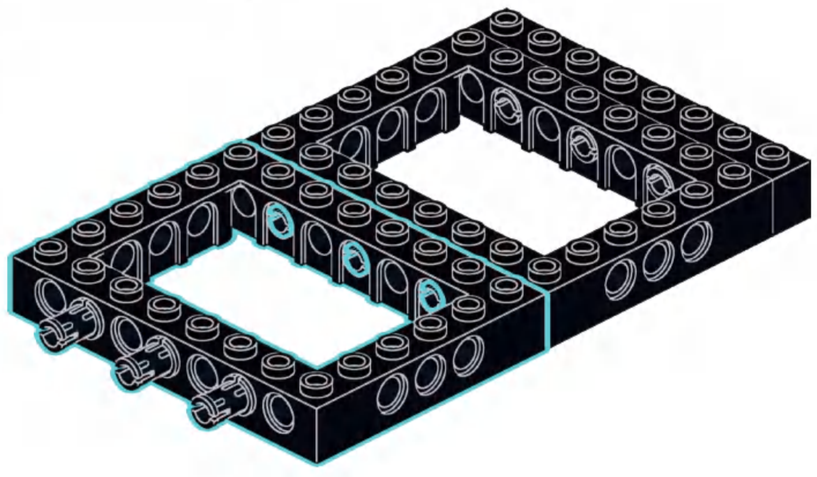

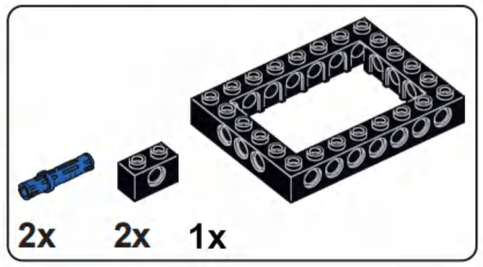

A4

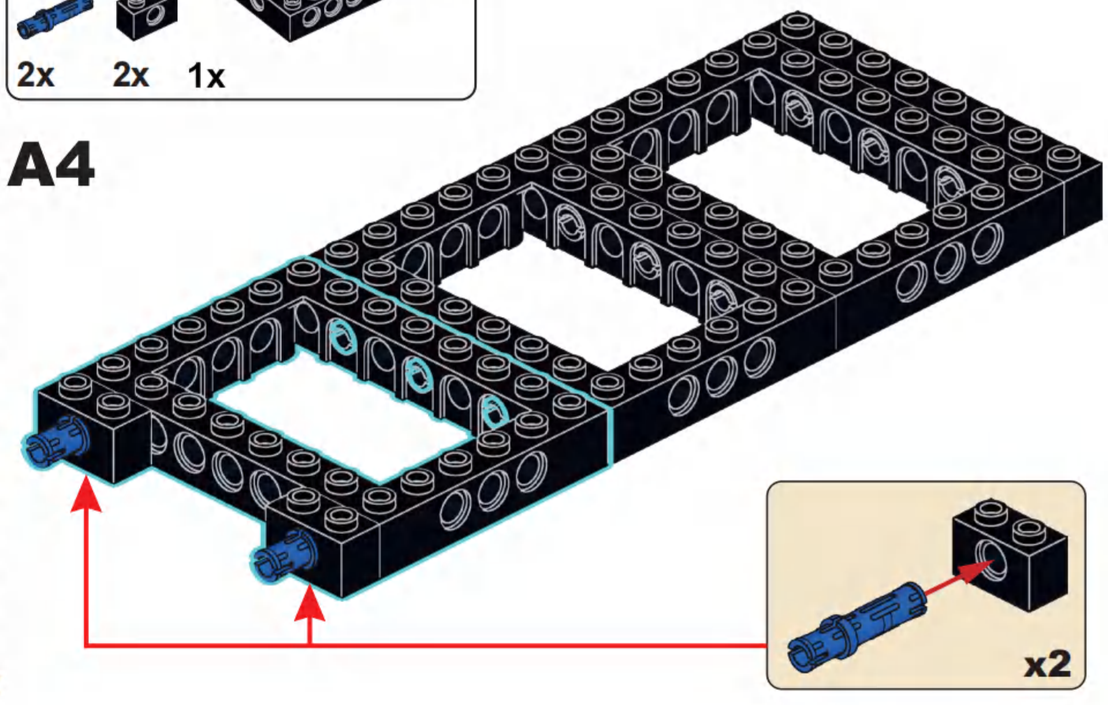

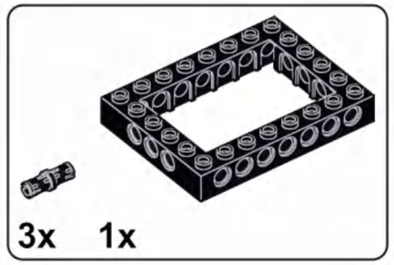

A5

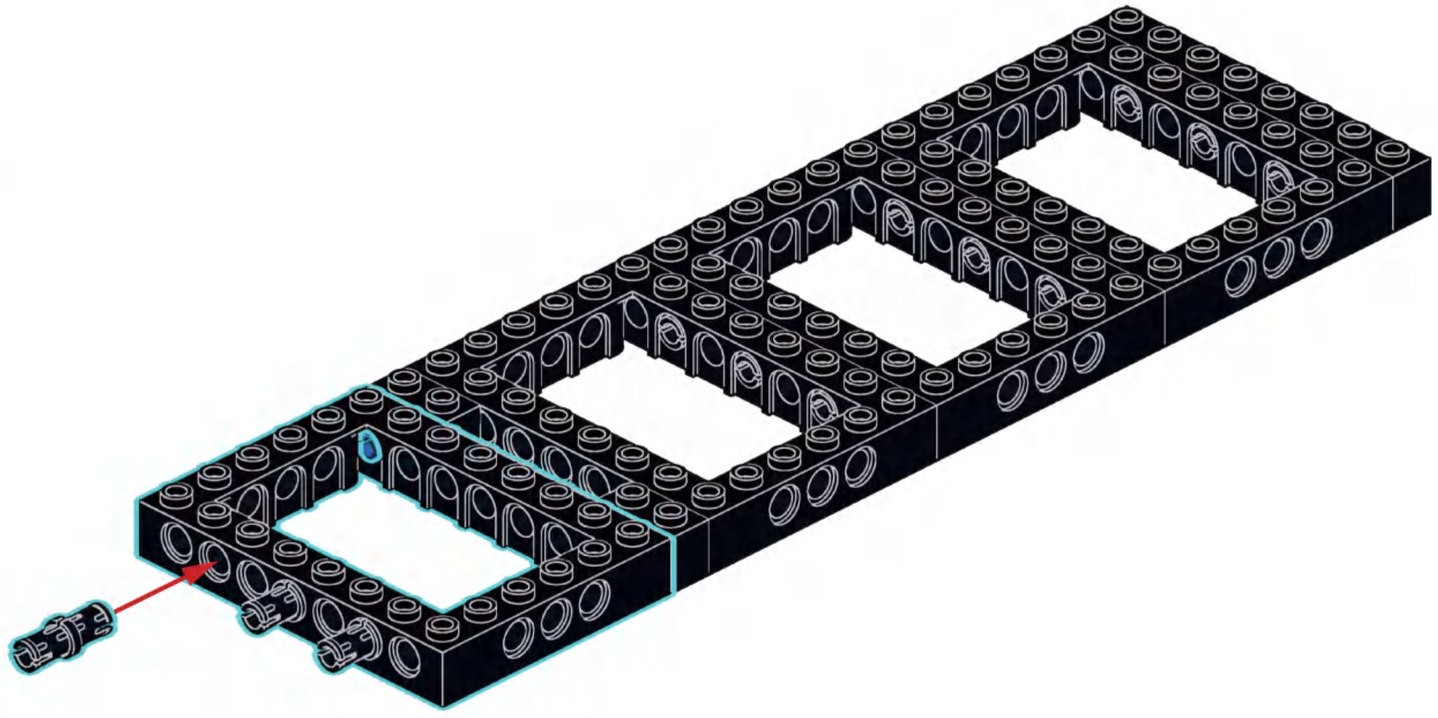

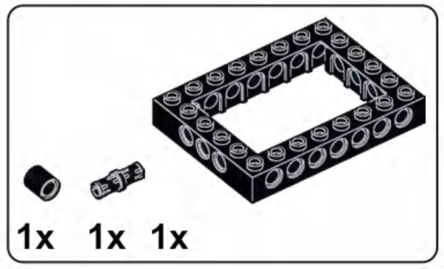

A6

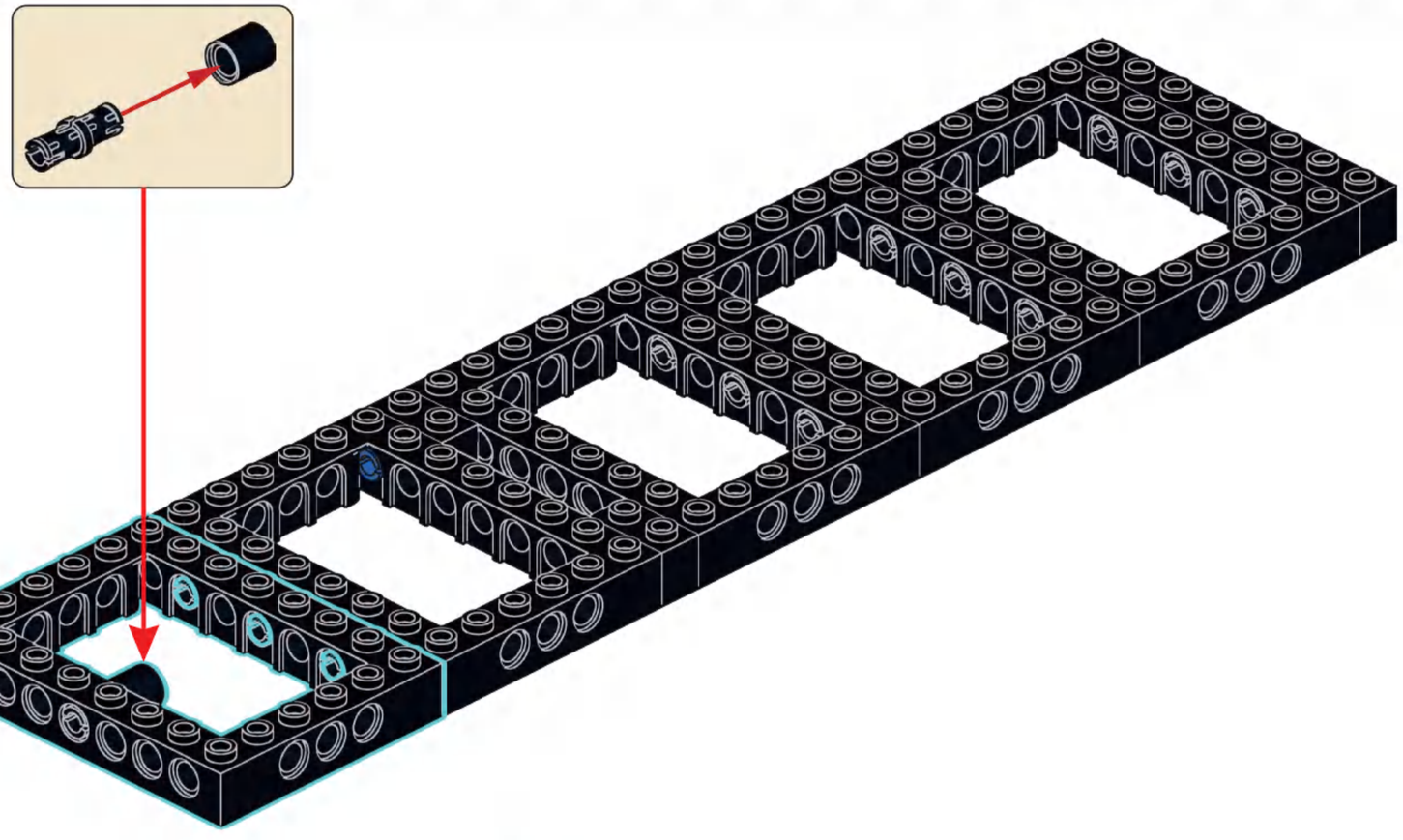

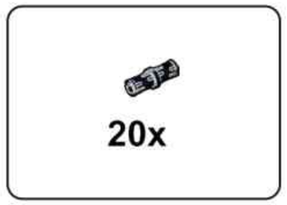

A7

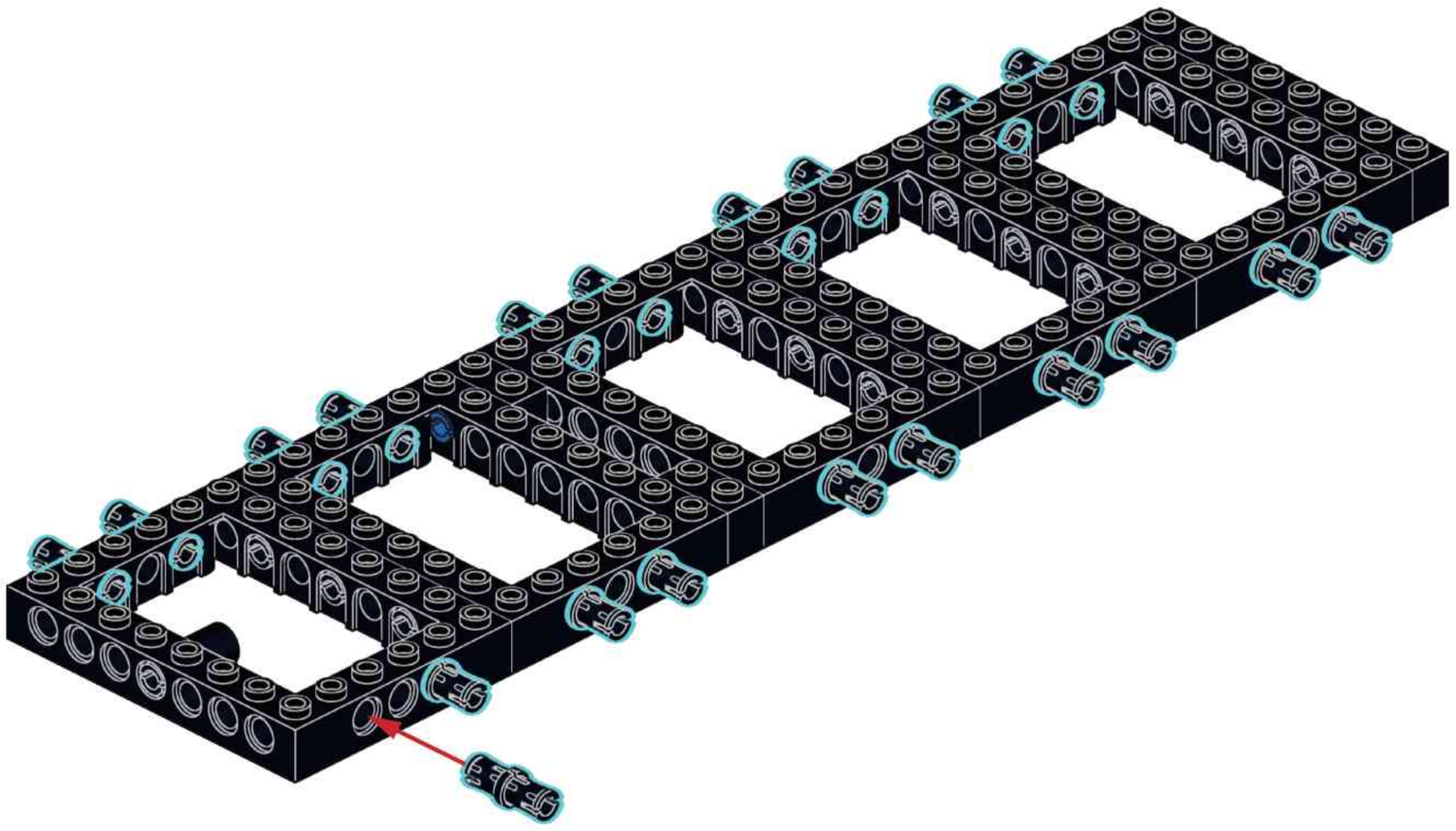

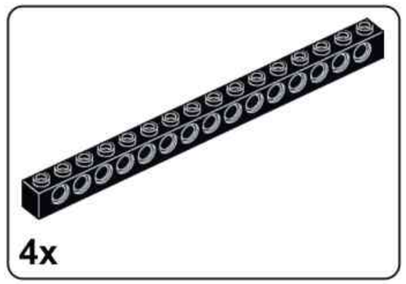

A8

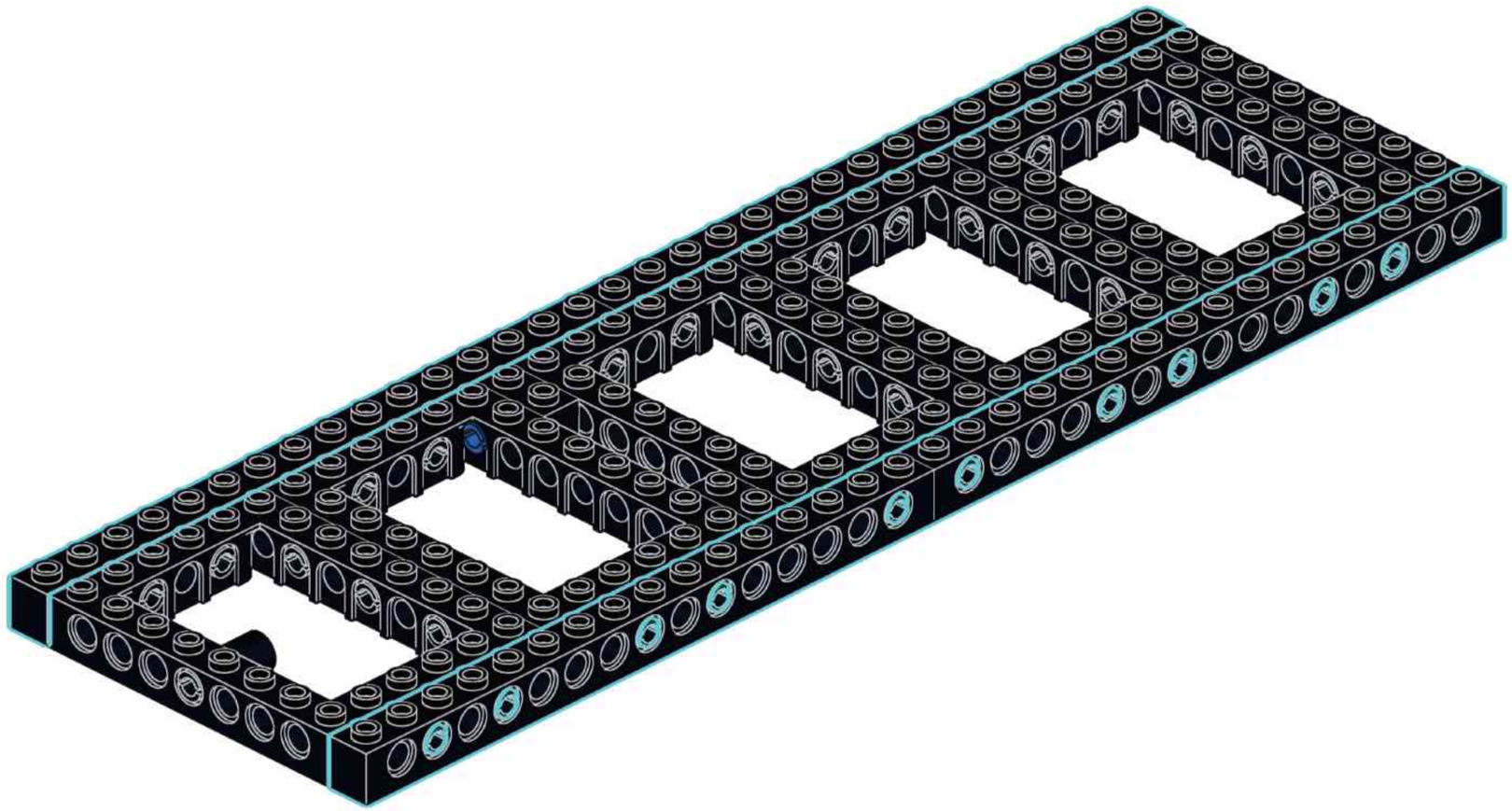

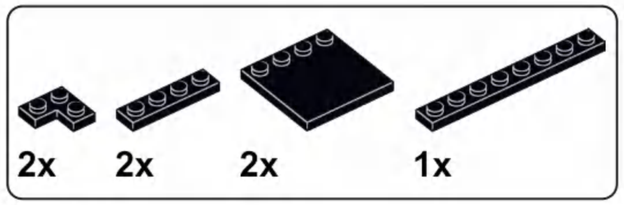

A9

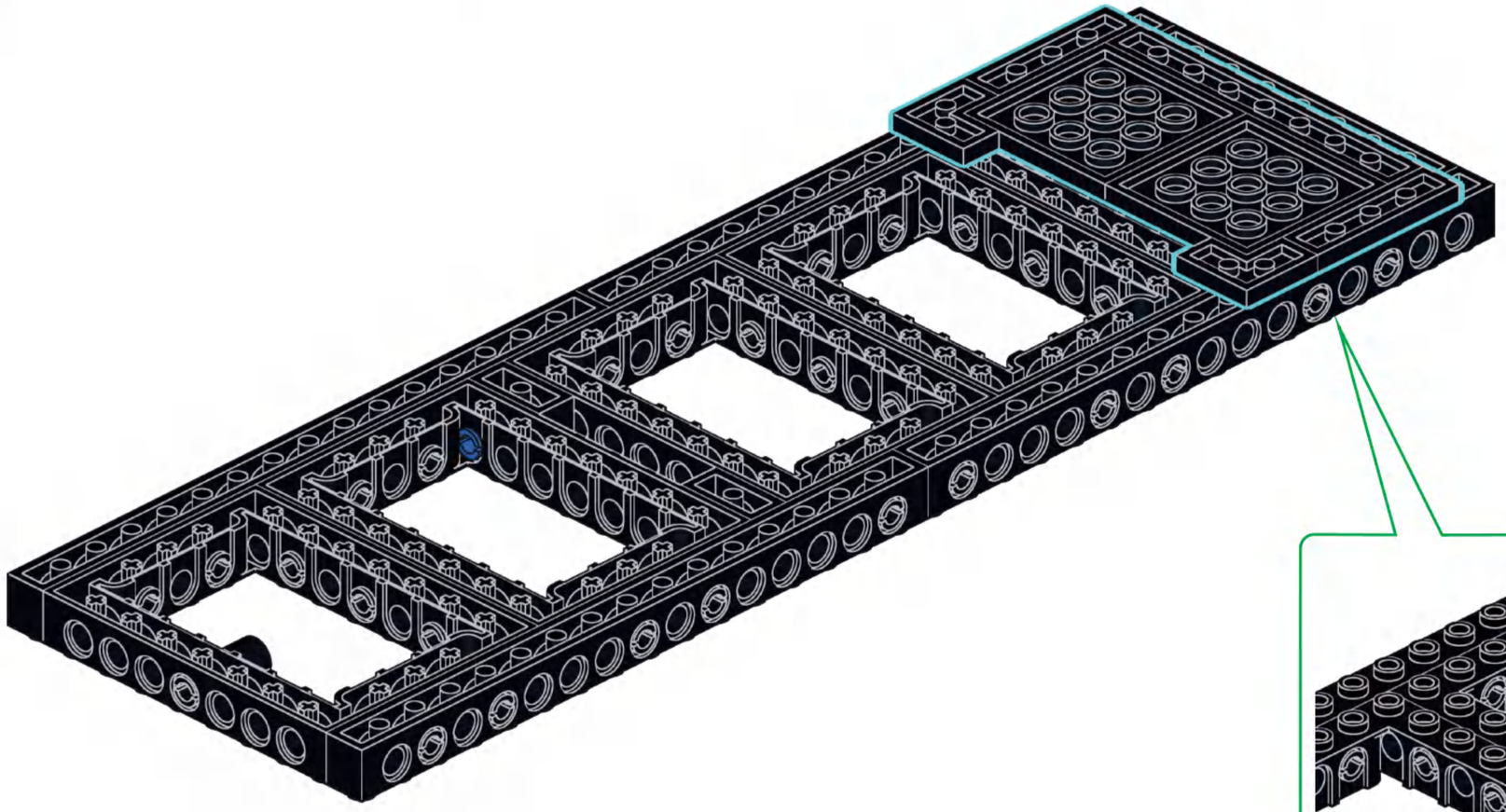

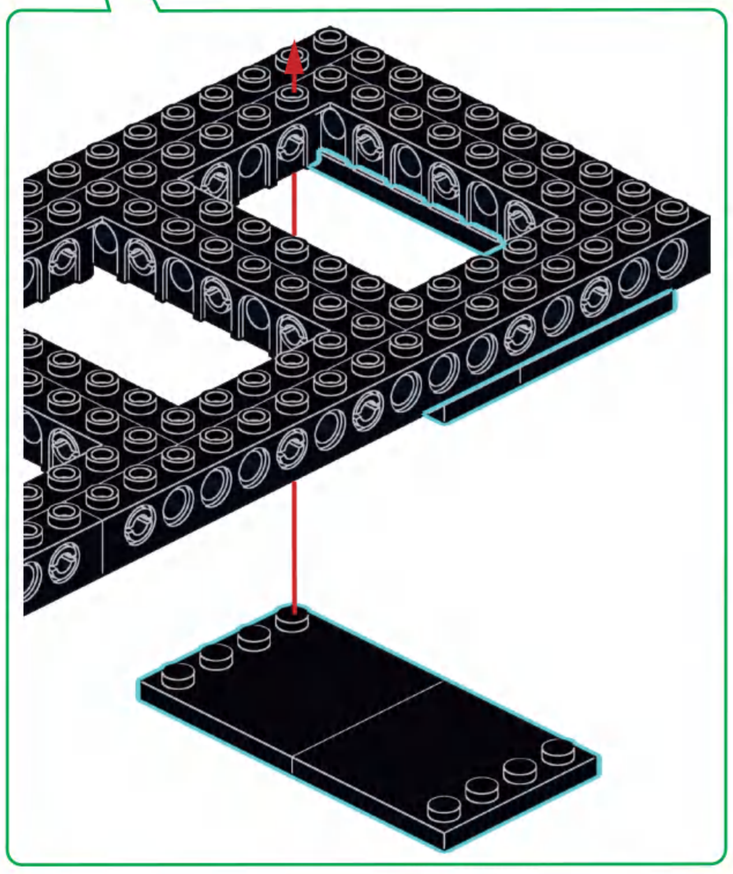

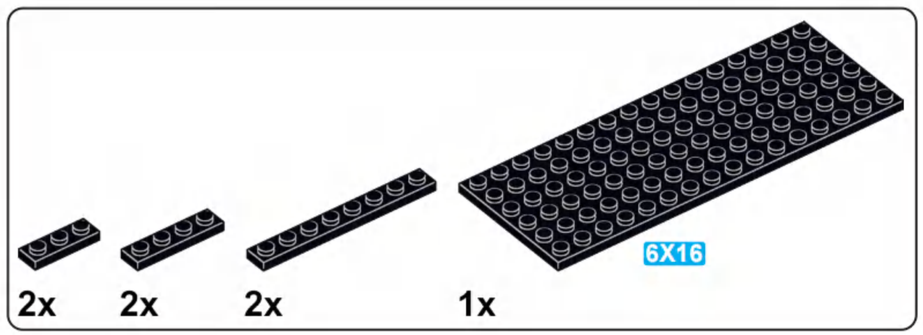

A10

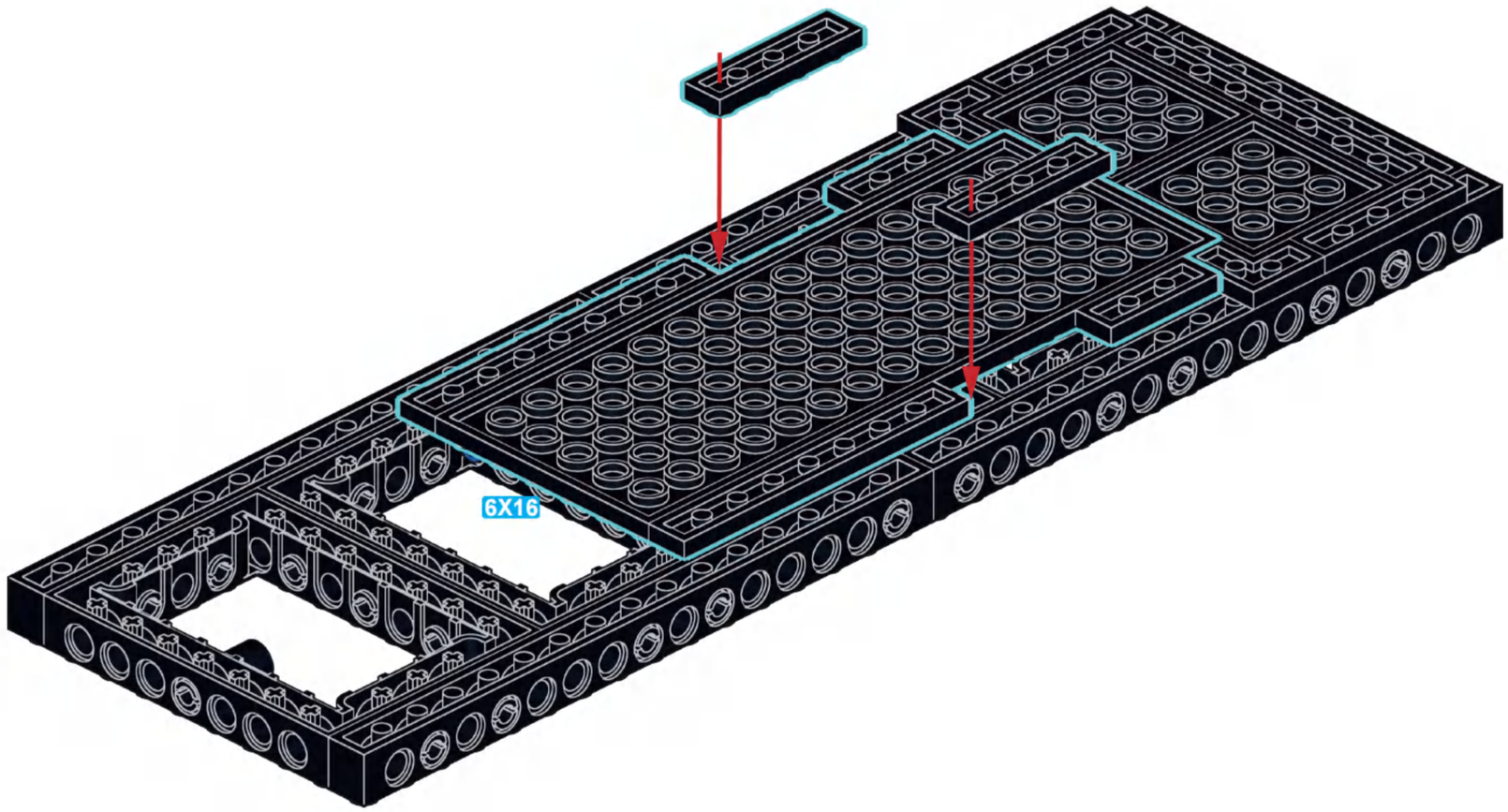

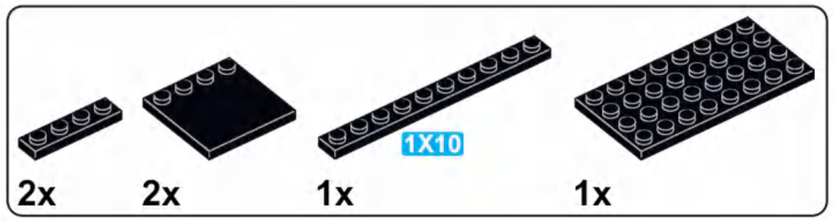

A11

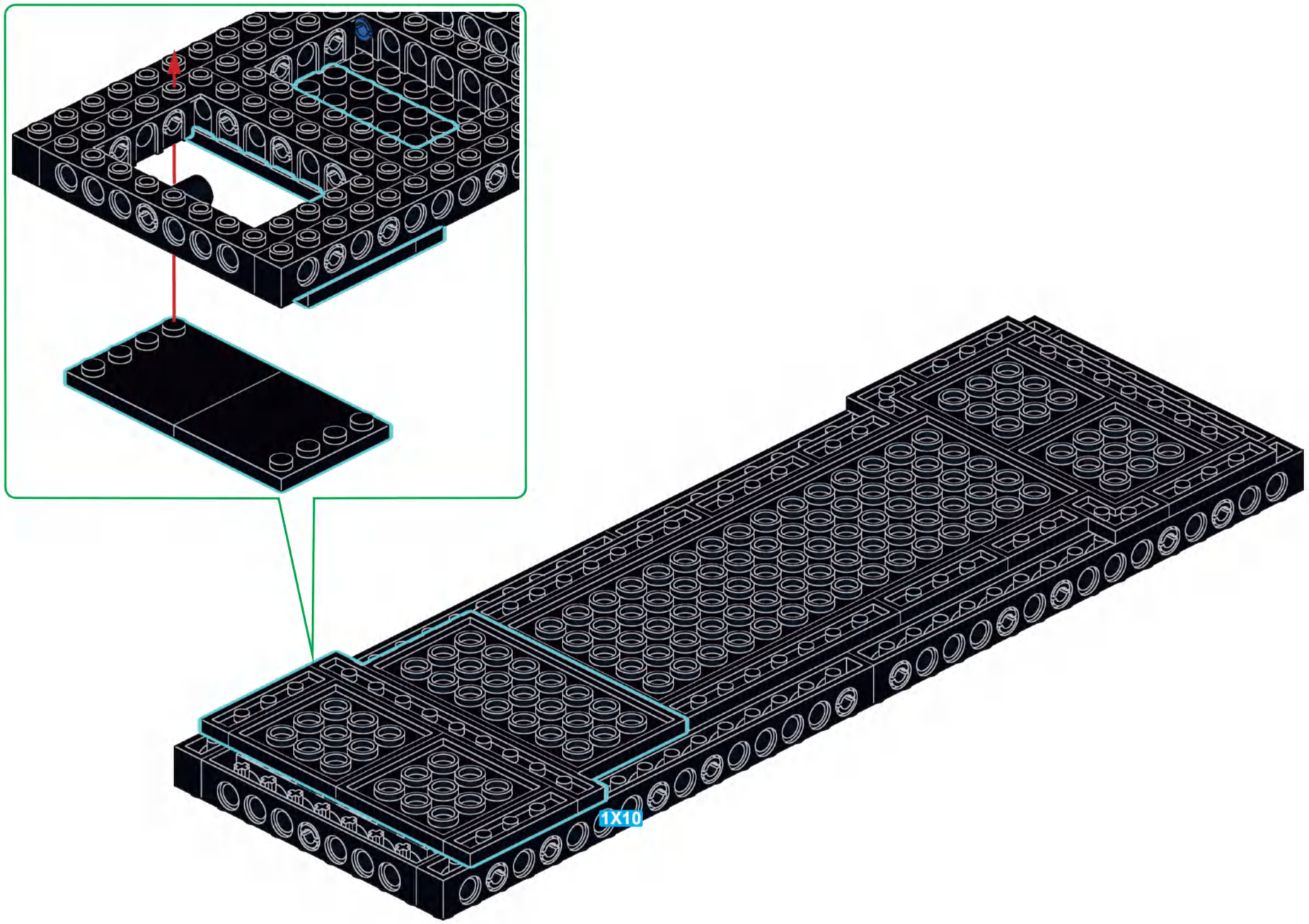

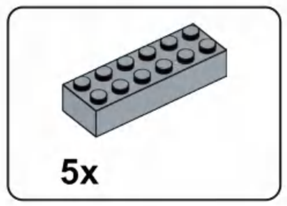

A12

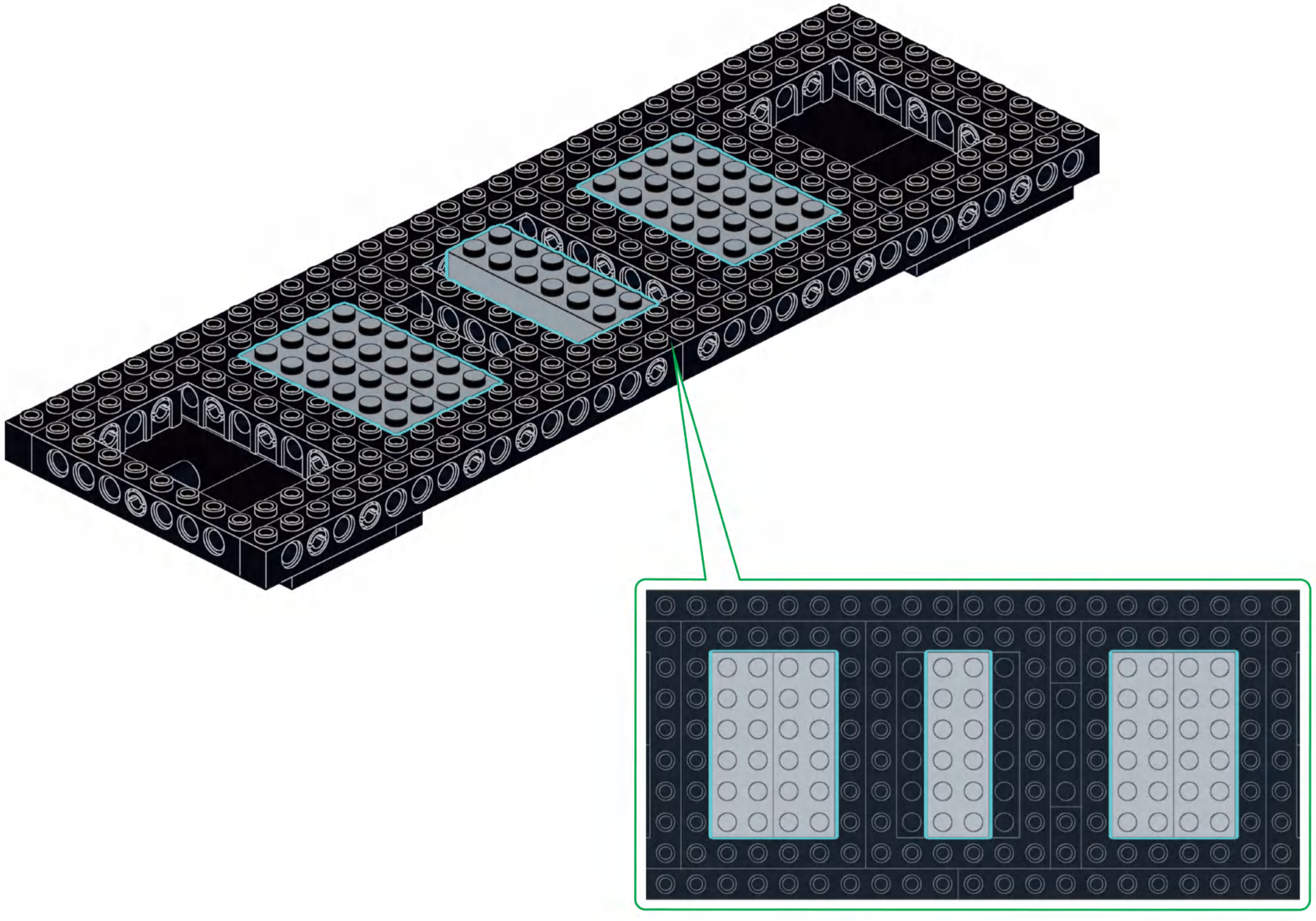

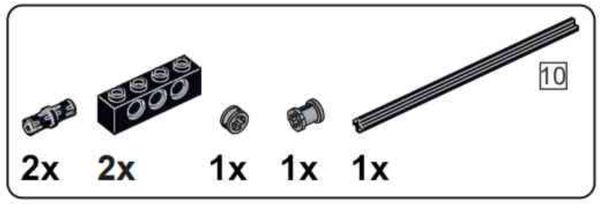

A13

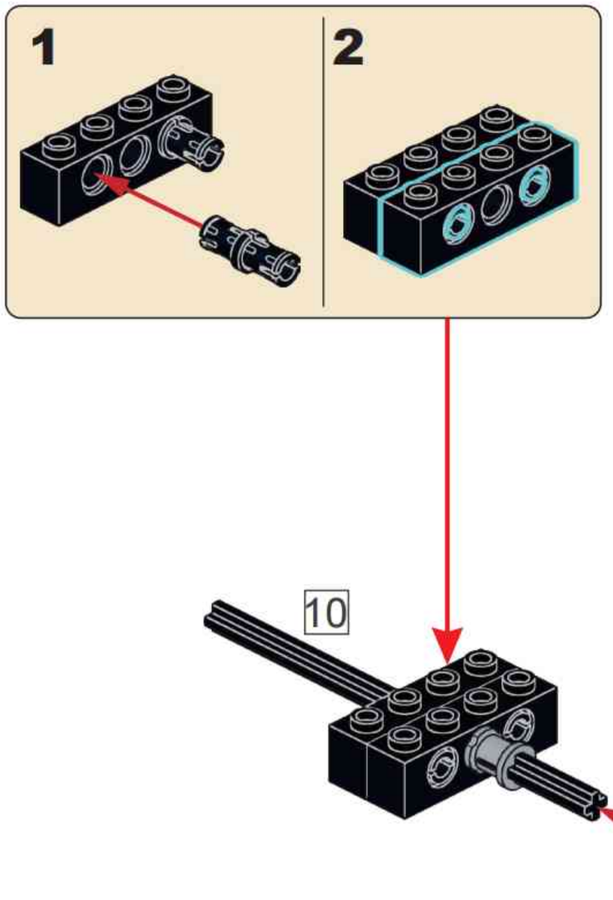

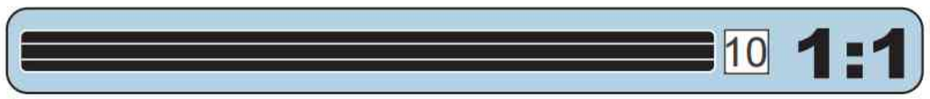

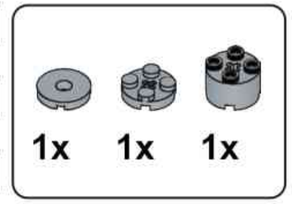

A14

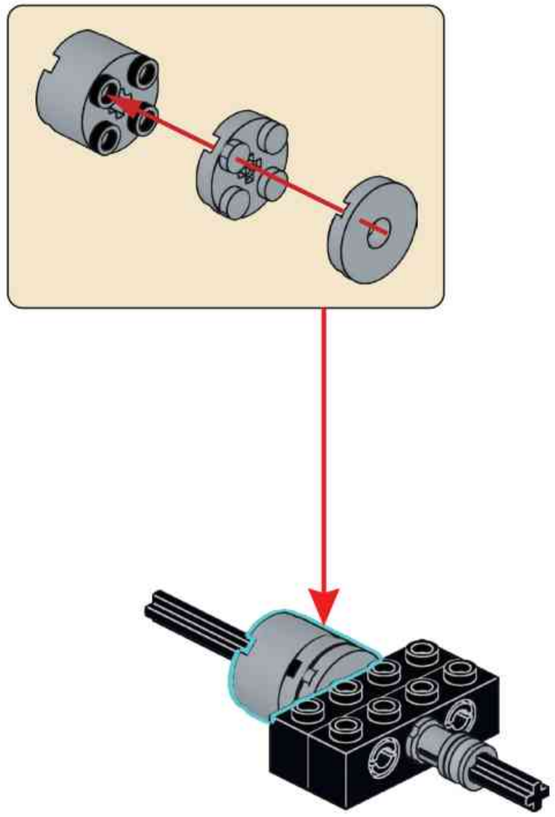

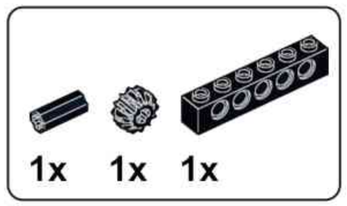

A15

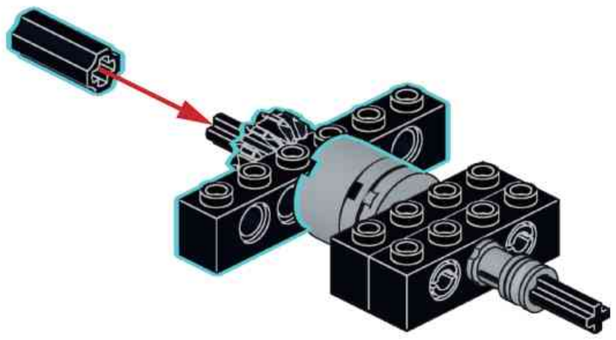

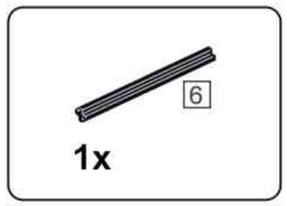

A16

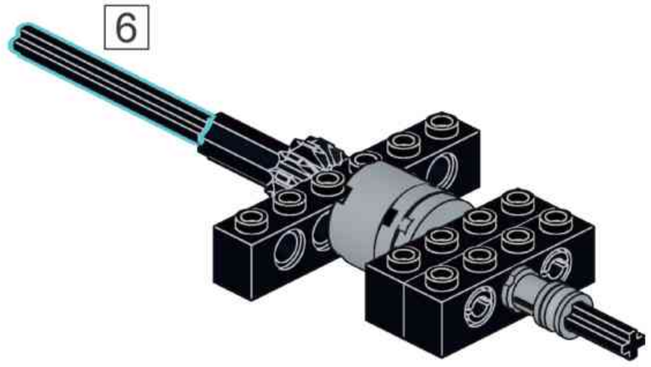

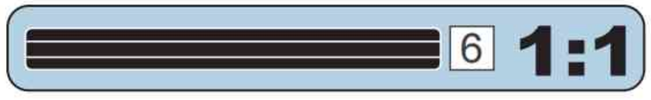

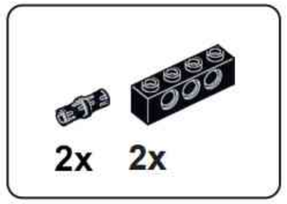

A17

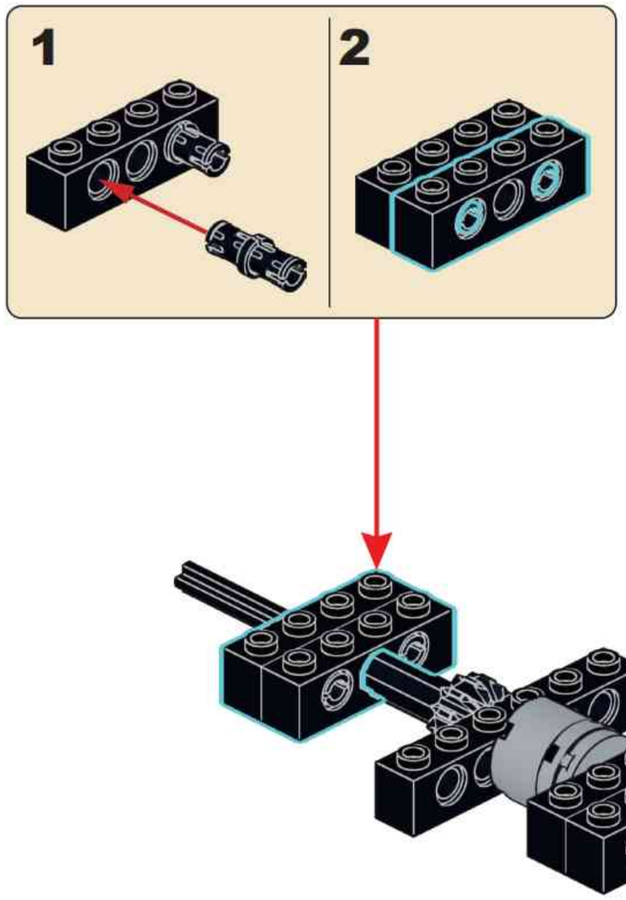

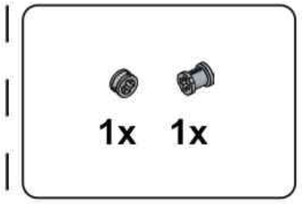

A18

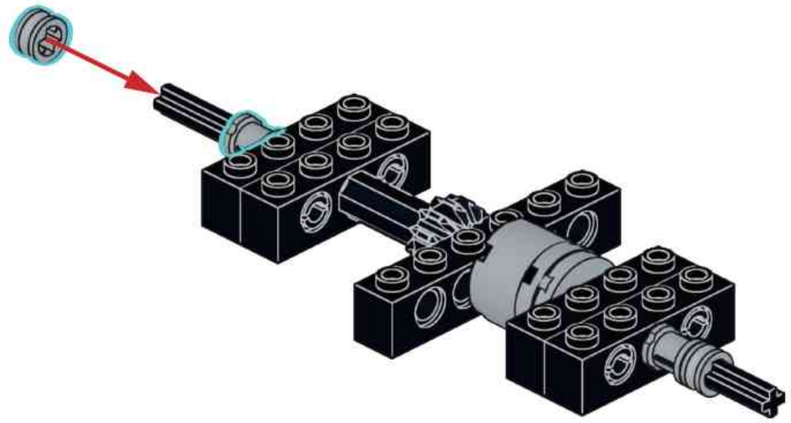

A19

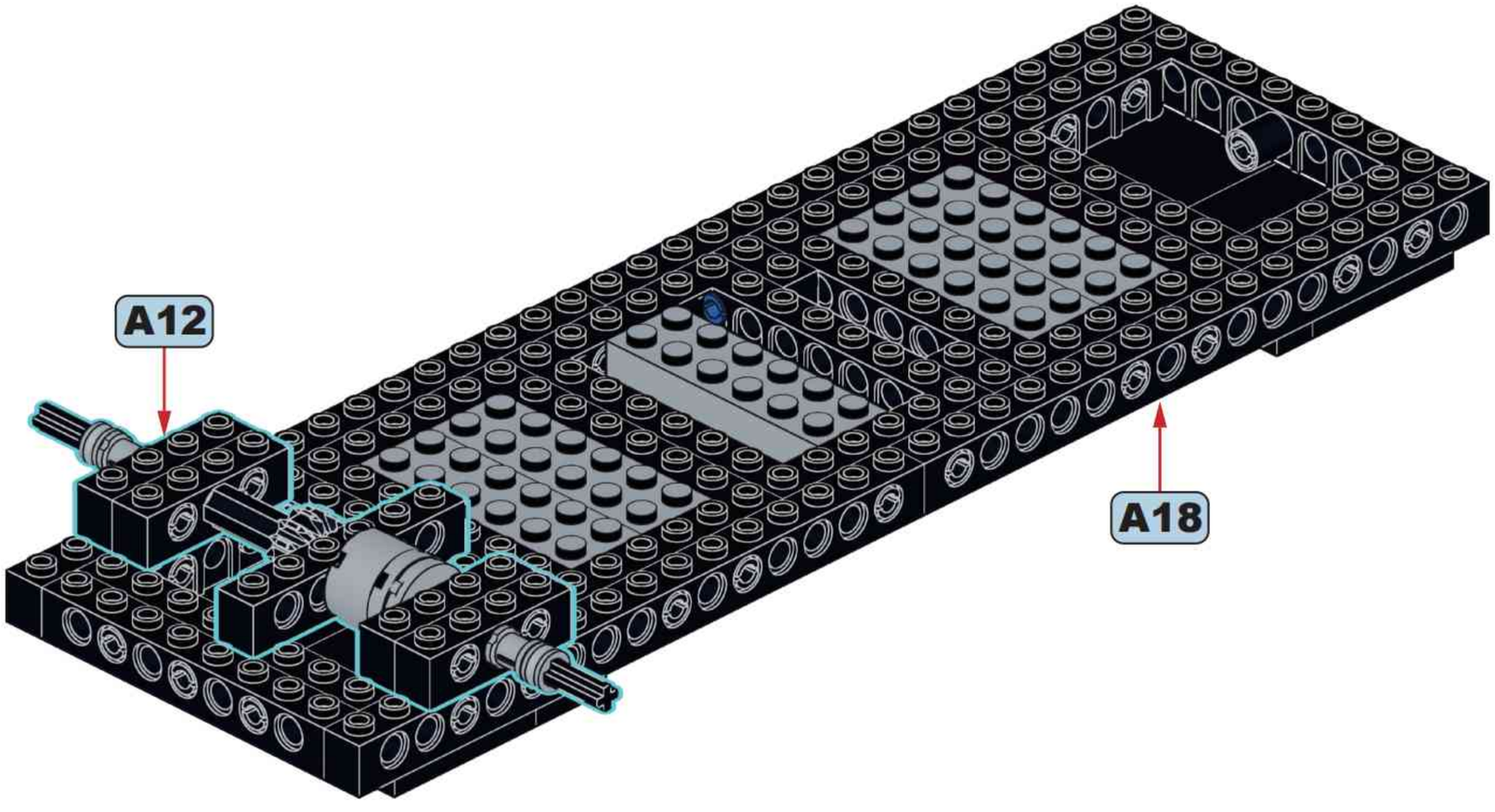

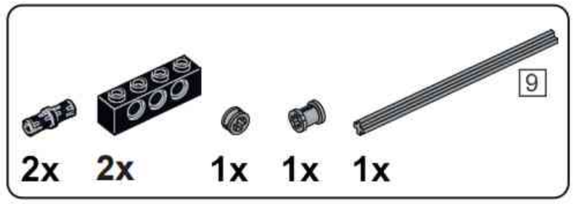

A20

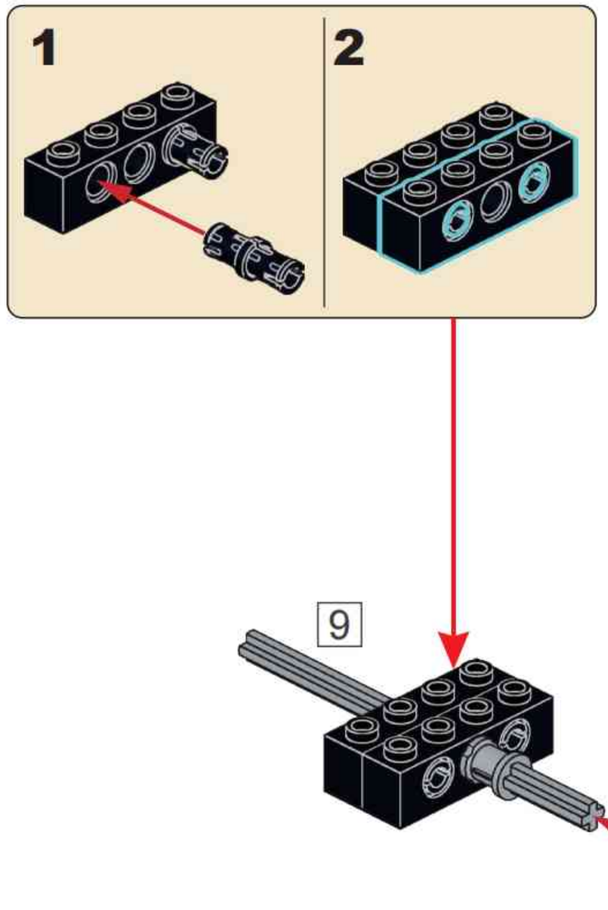

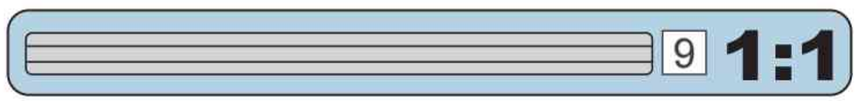

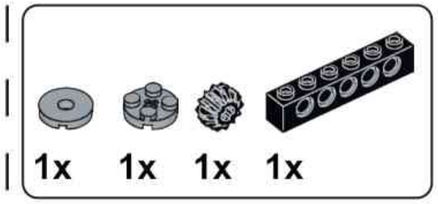

A21

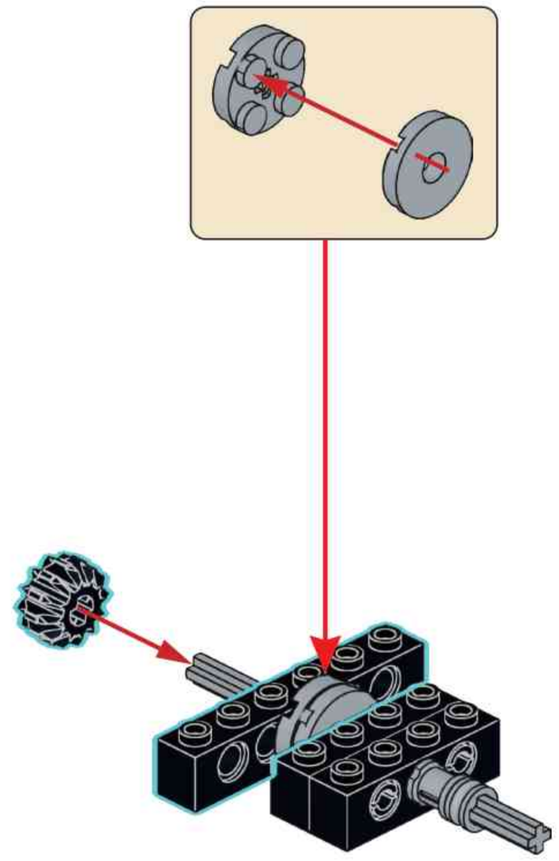

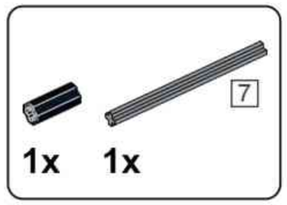

A22

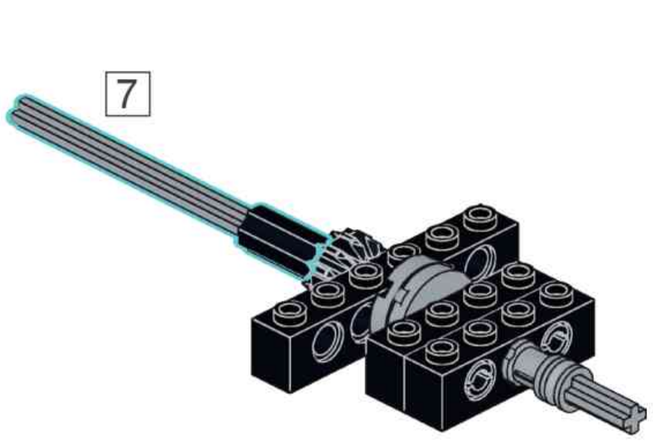

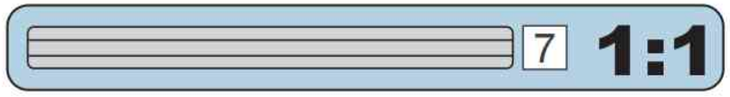

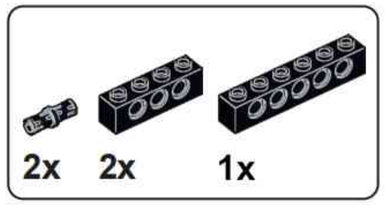

A23

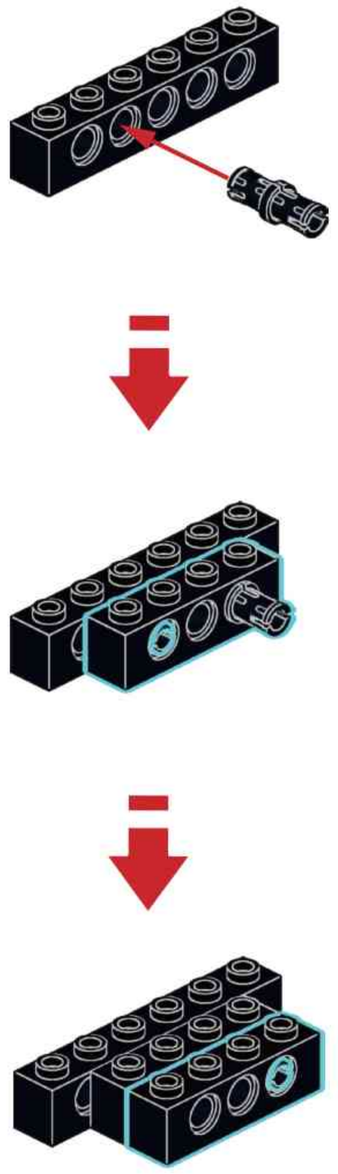

A24

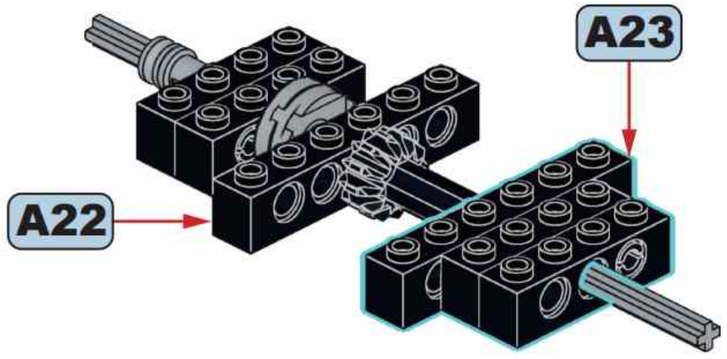

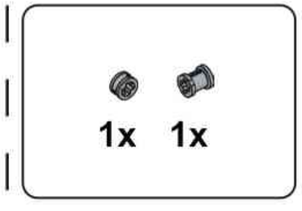

A25

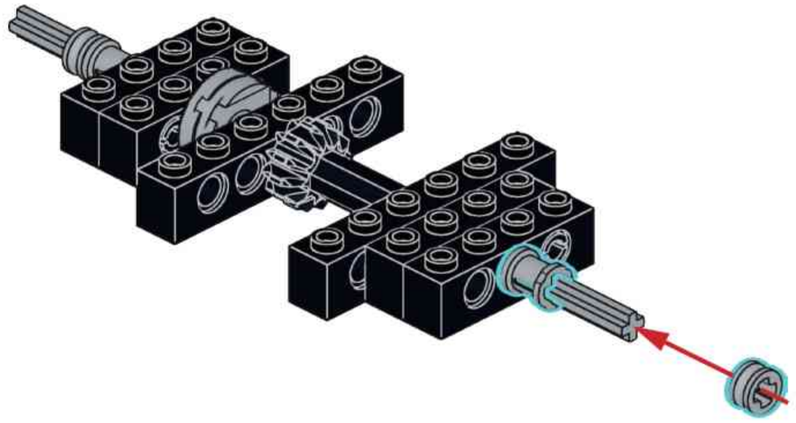

A26

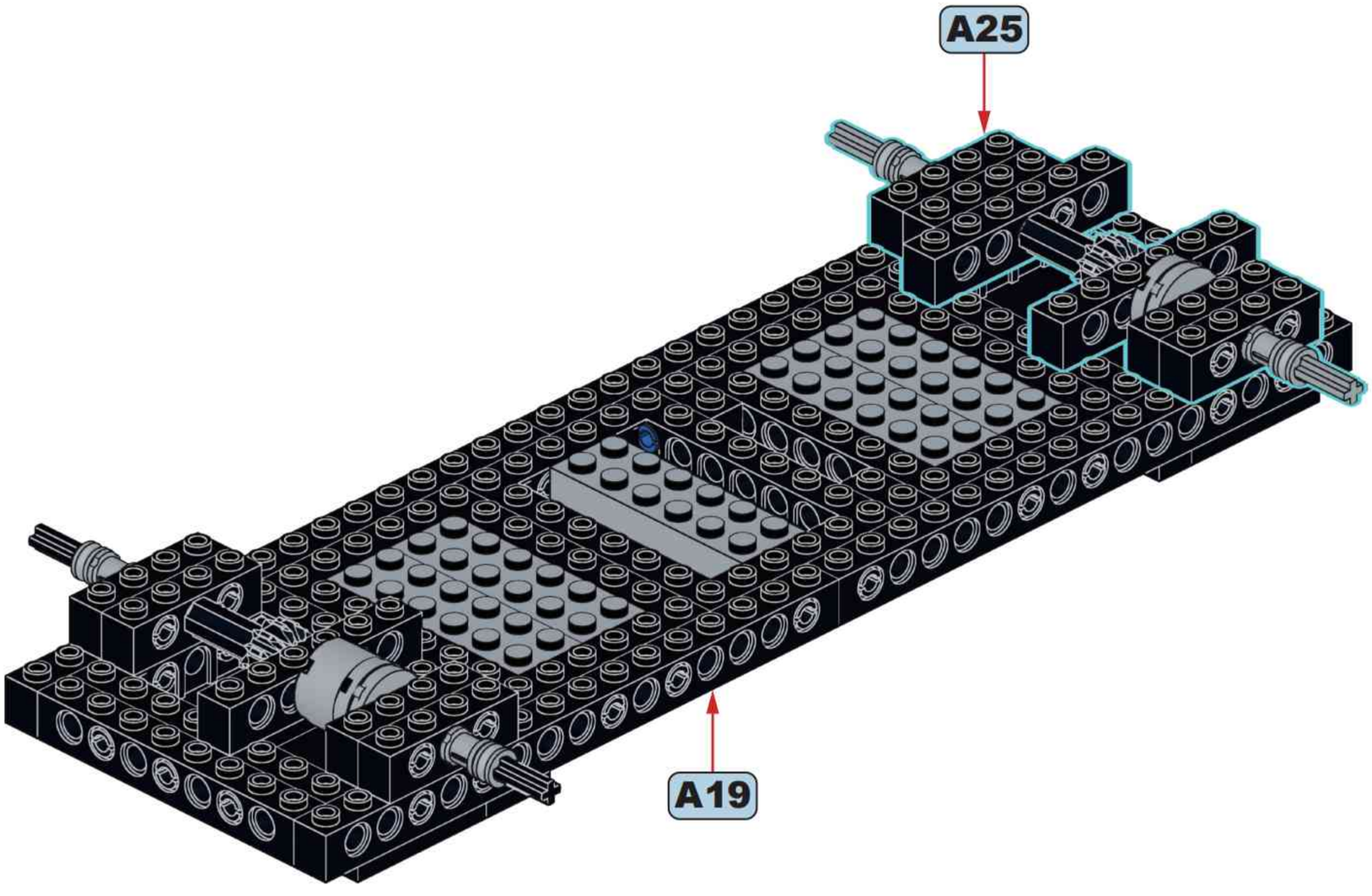

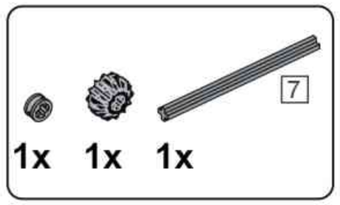

A27

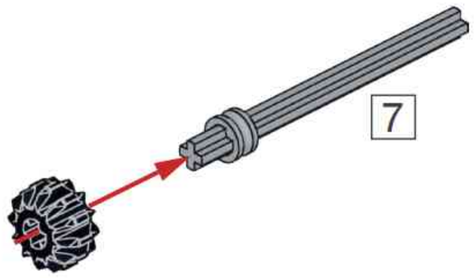

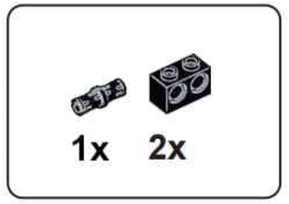

A28

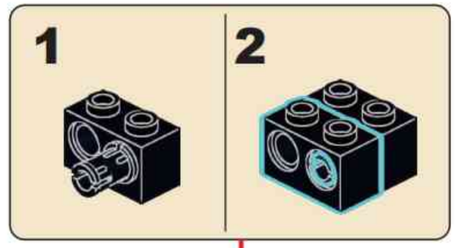

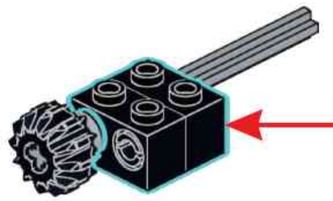

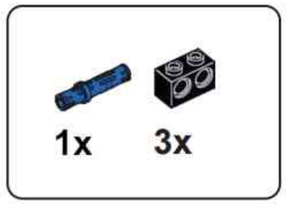

A29

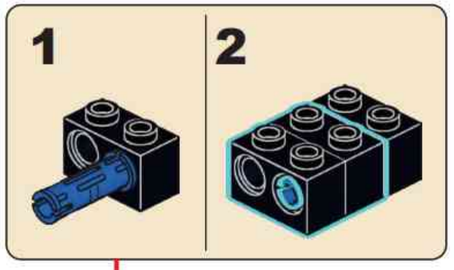

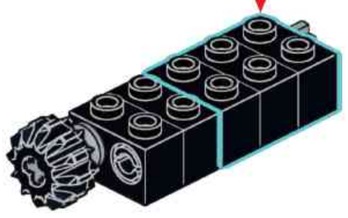

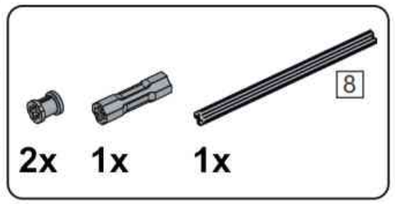

A30

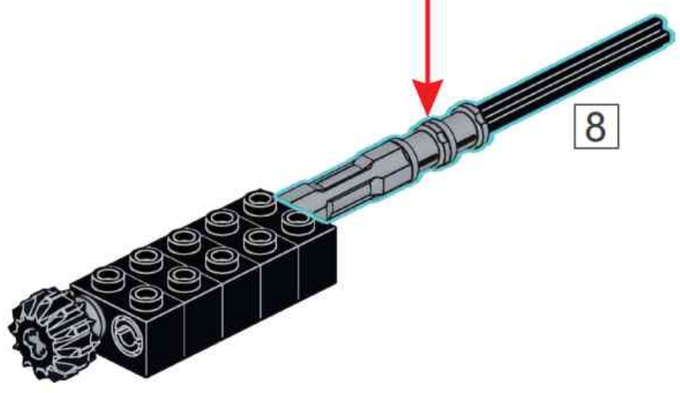

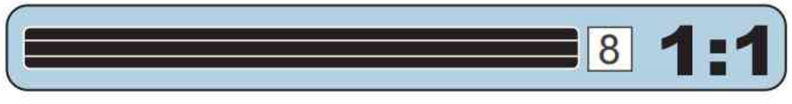

1x

A31

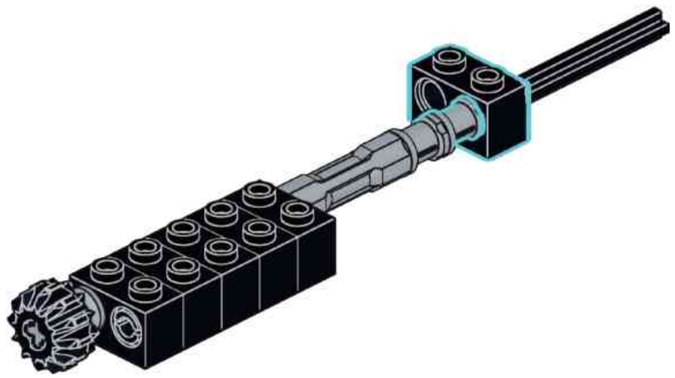

1x 1x

A33

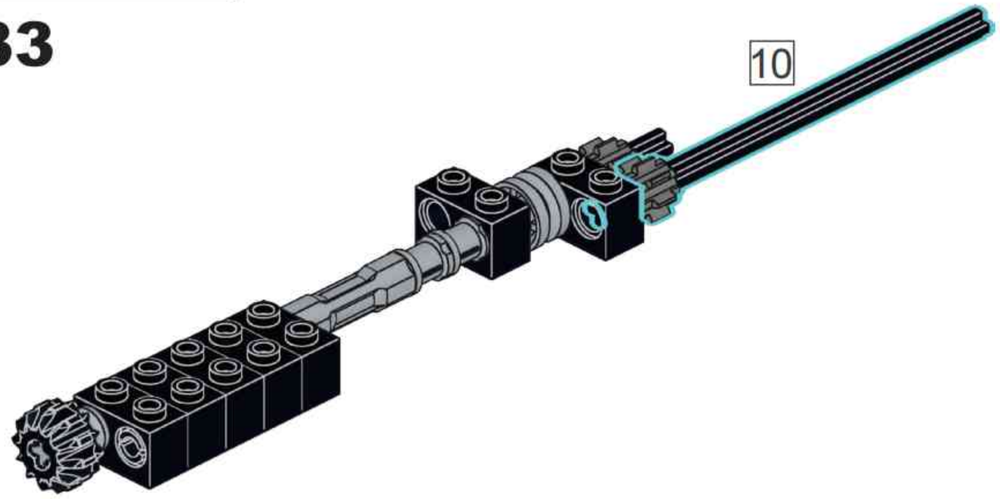

1x 1x 1x

A32

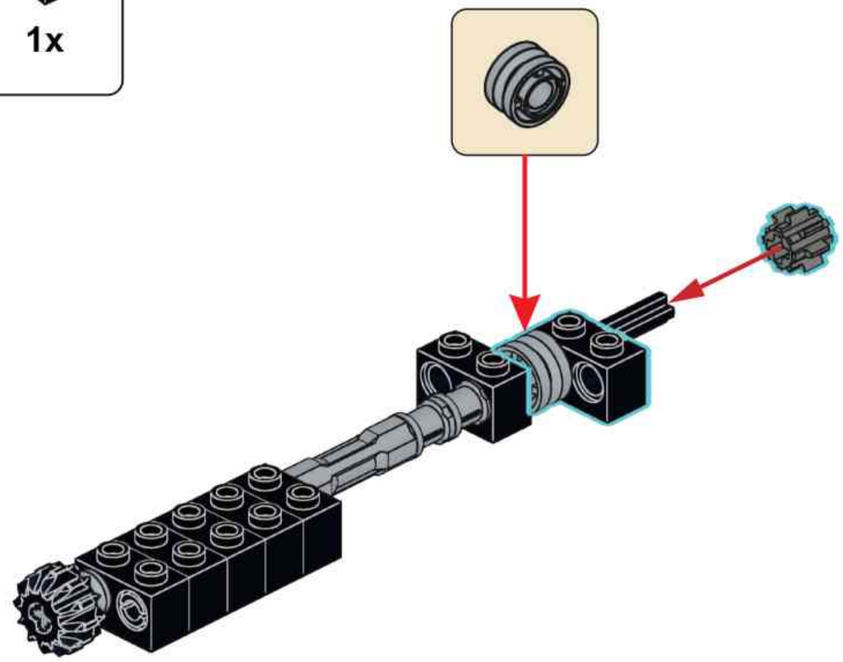

4x 1x

A34

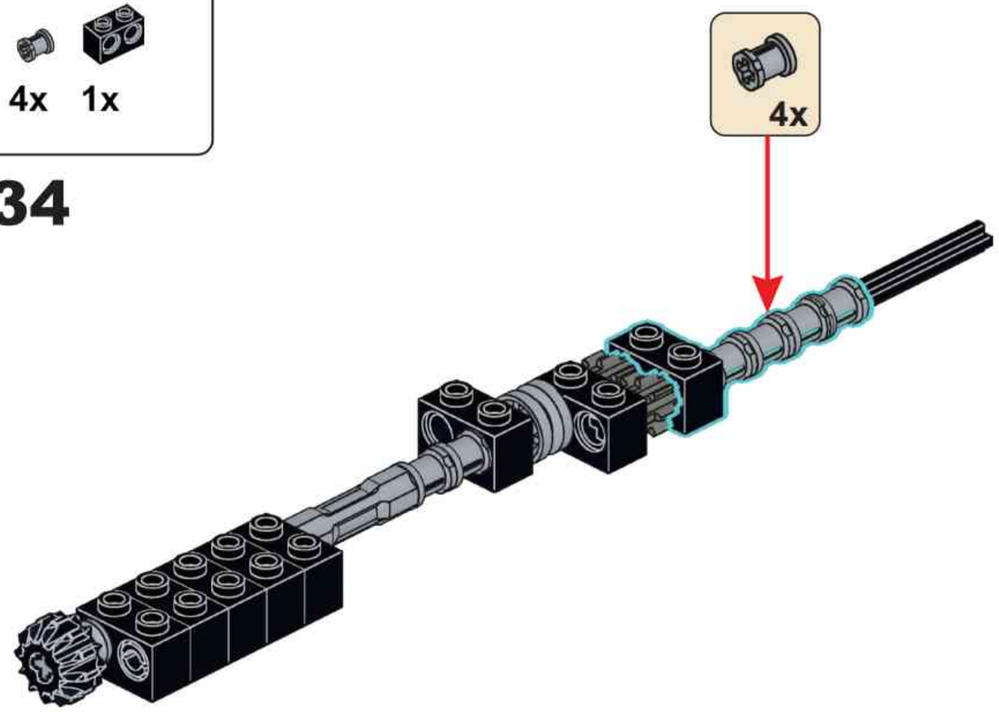

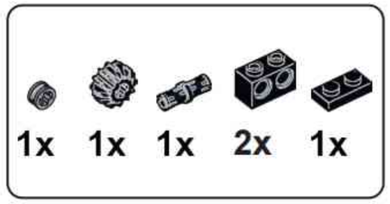

A35

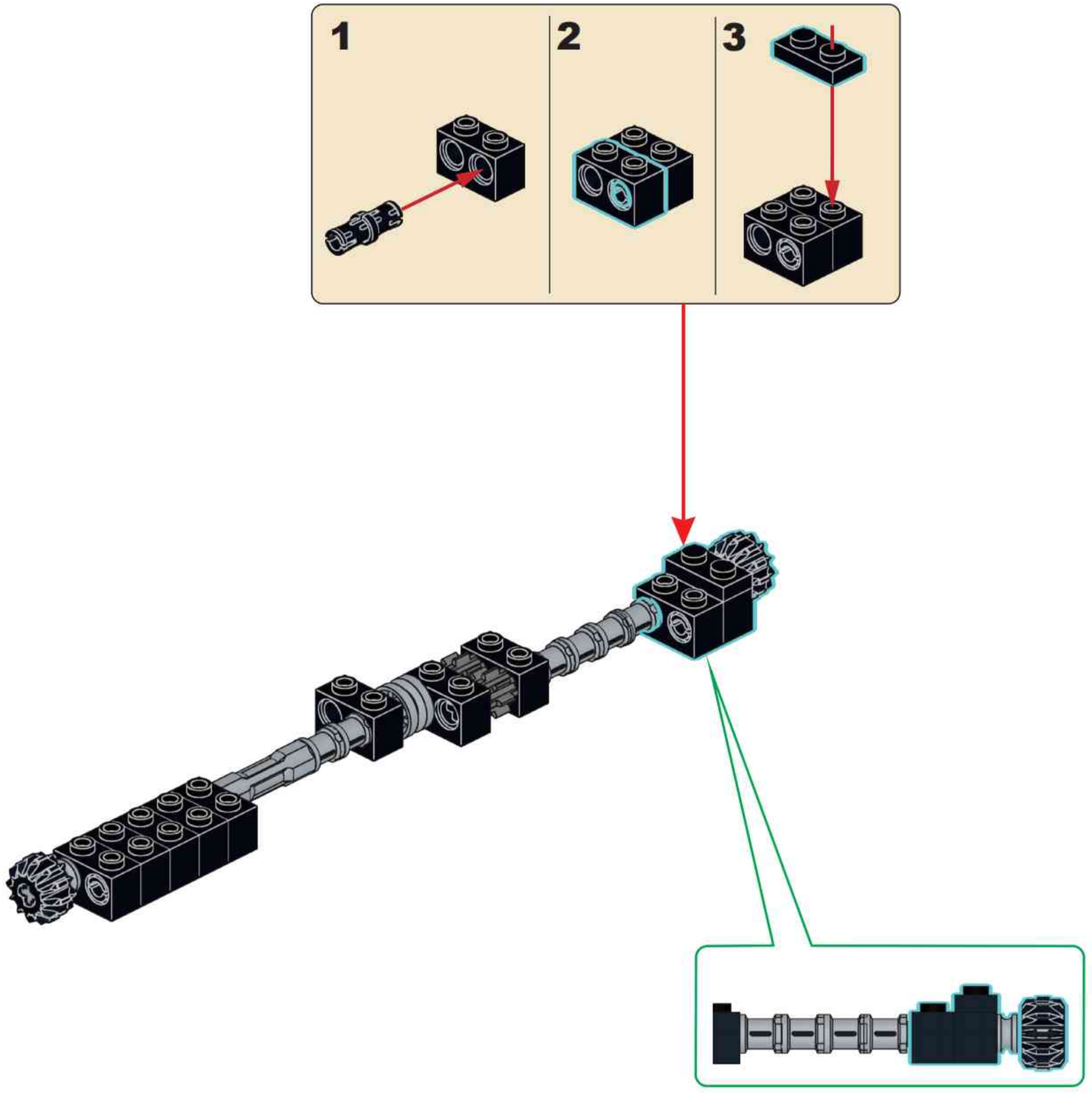

A36

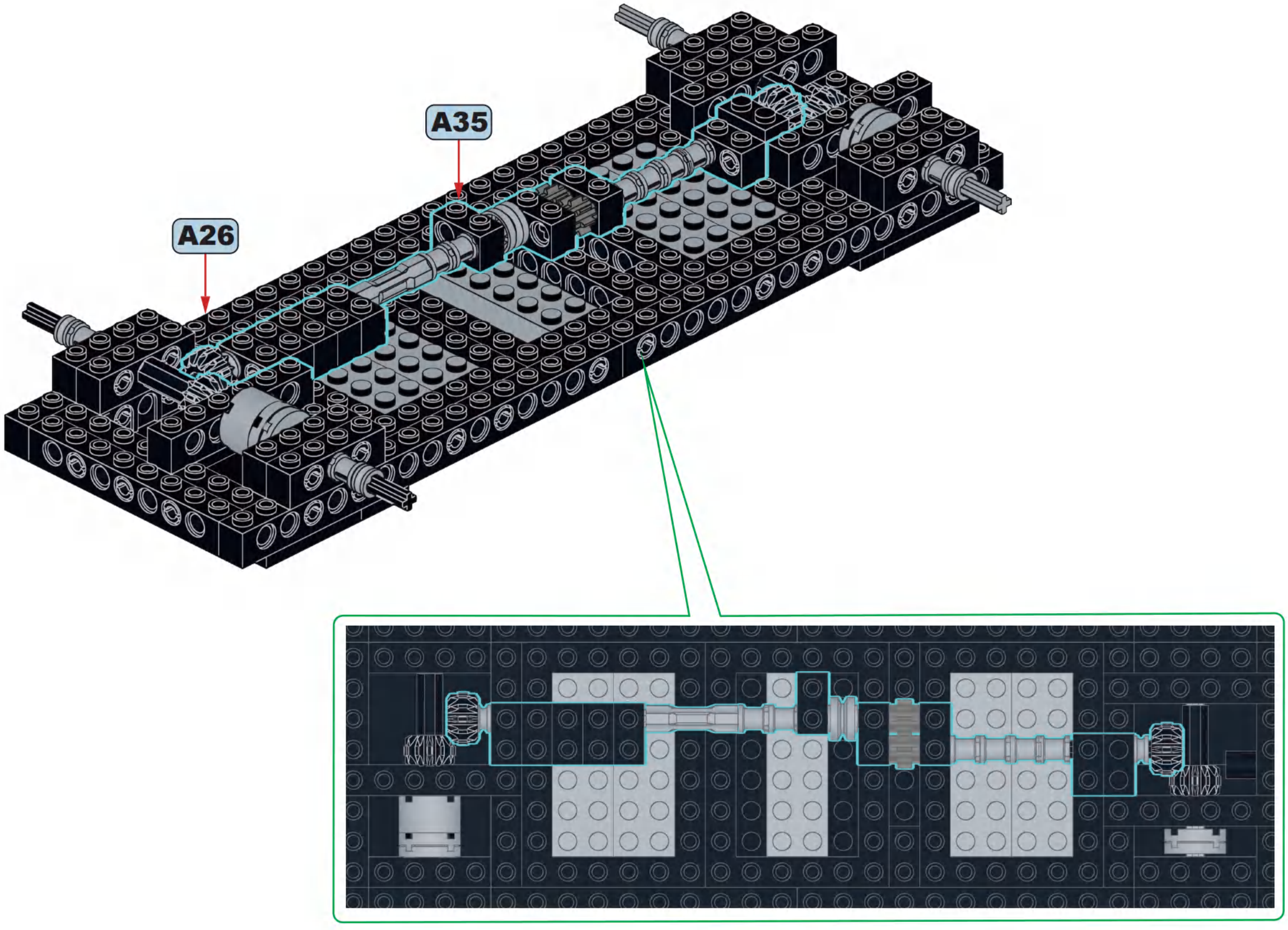

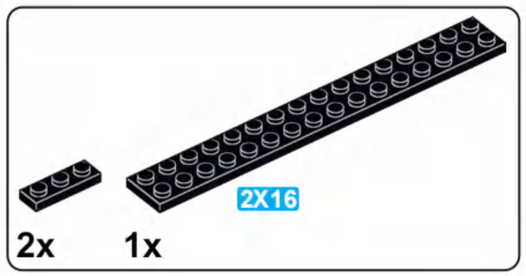

A37

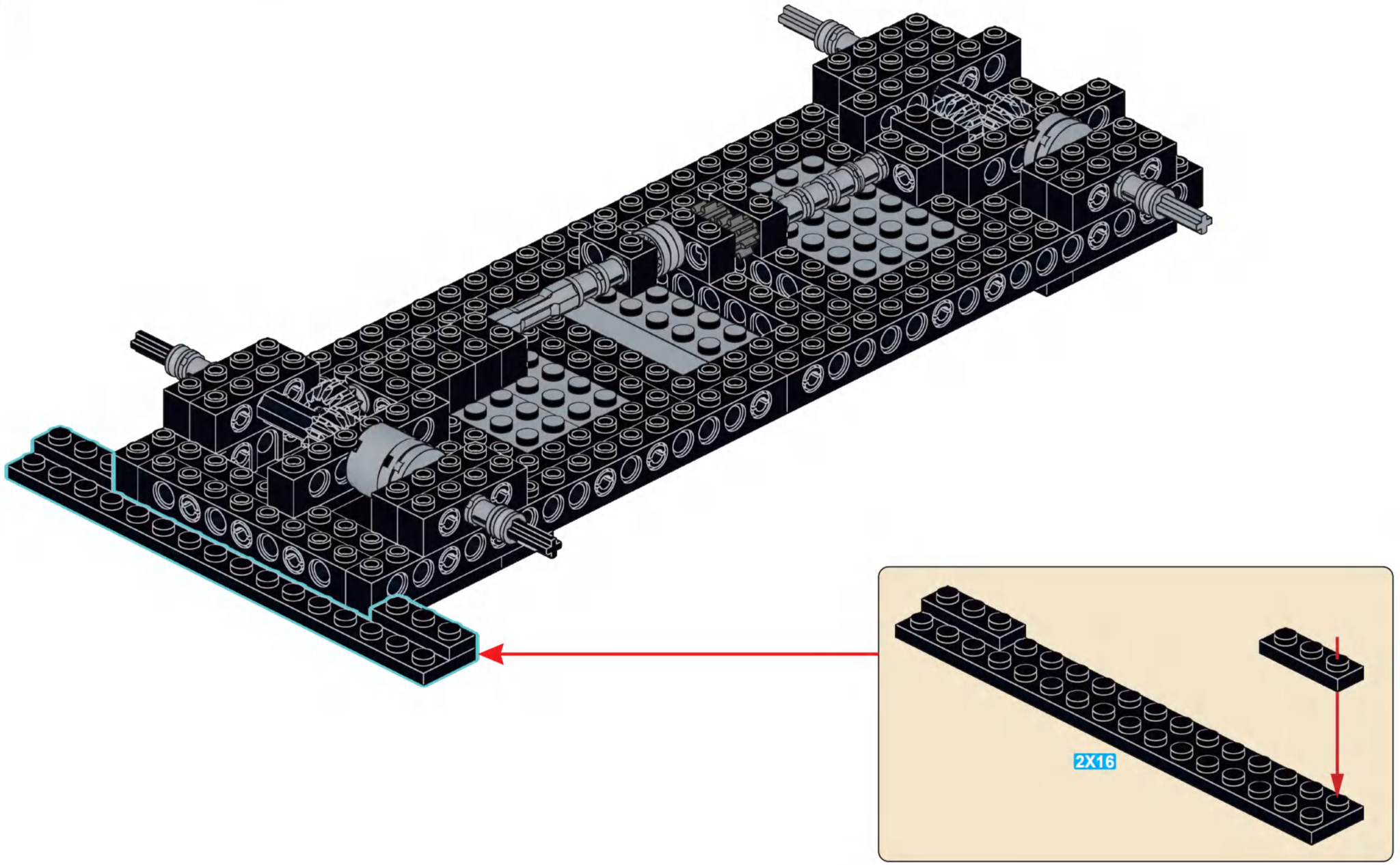

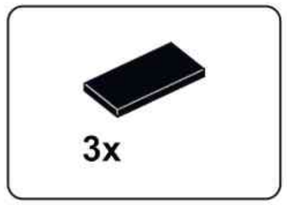

A38

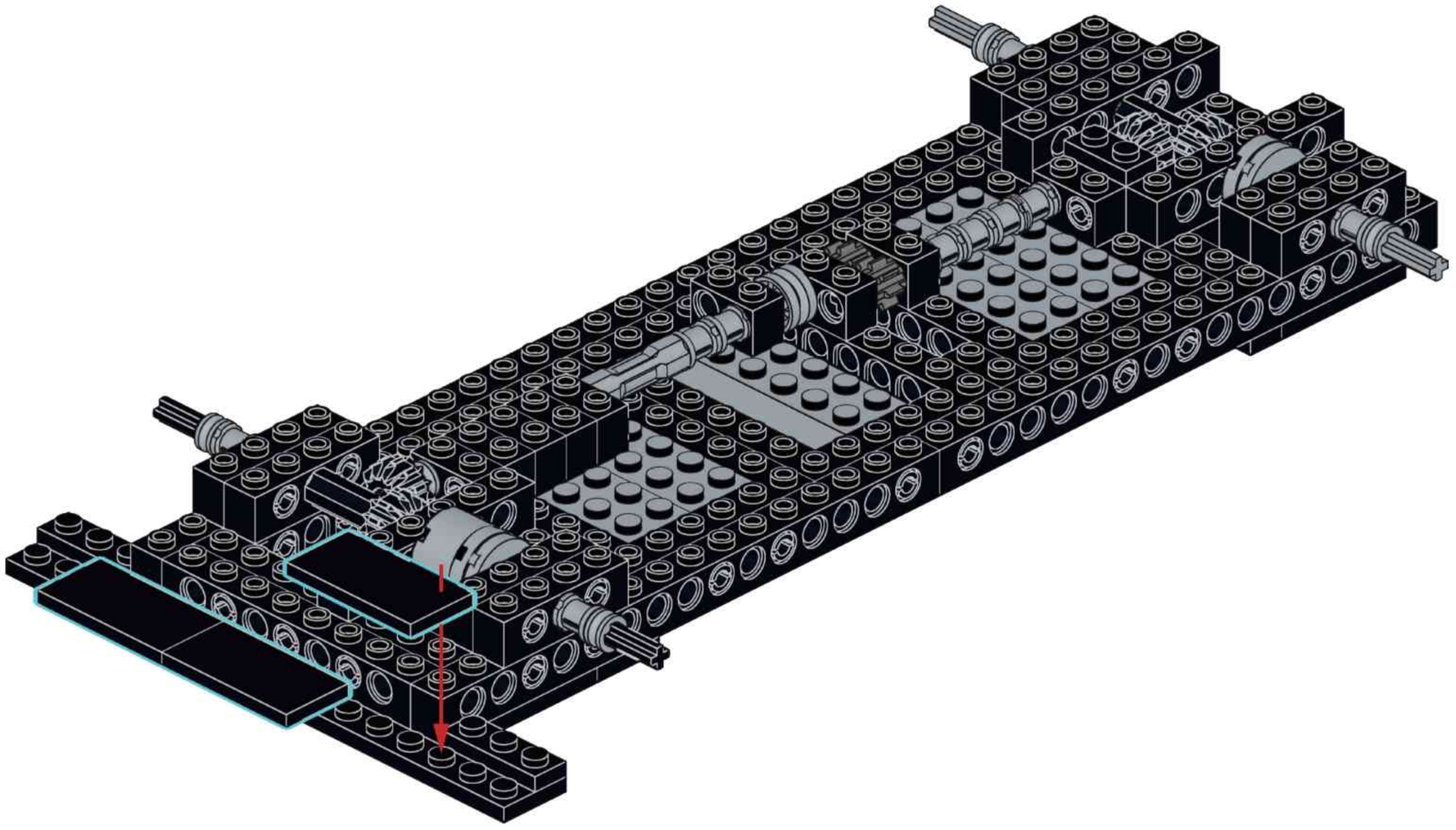

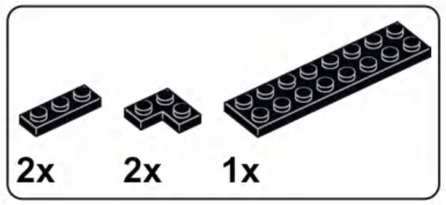

A39

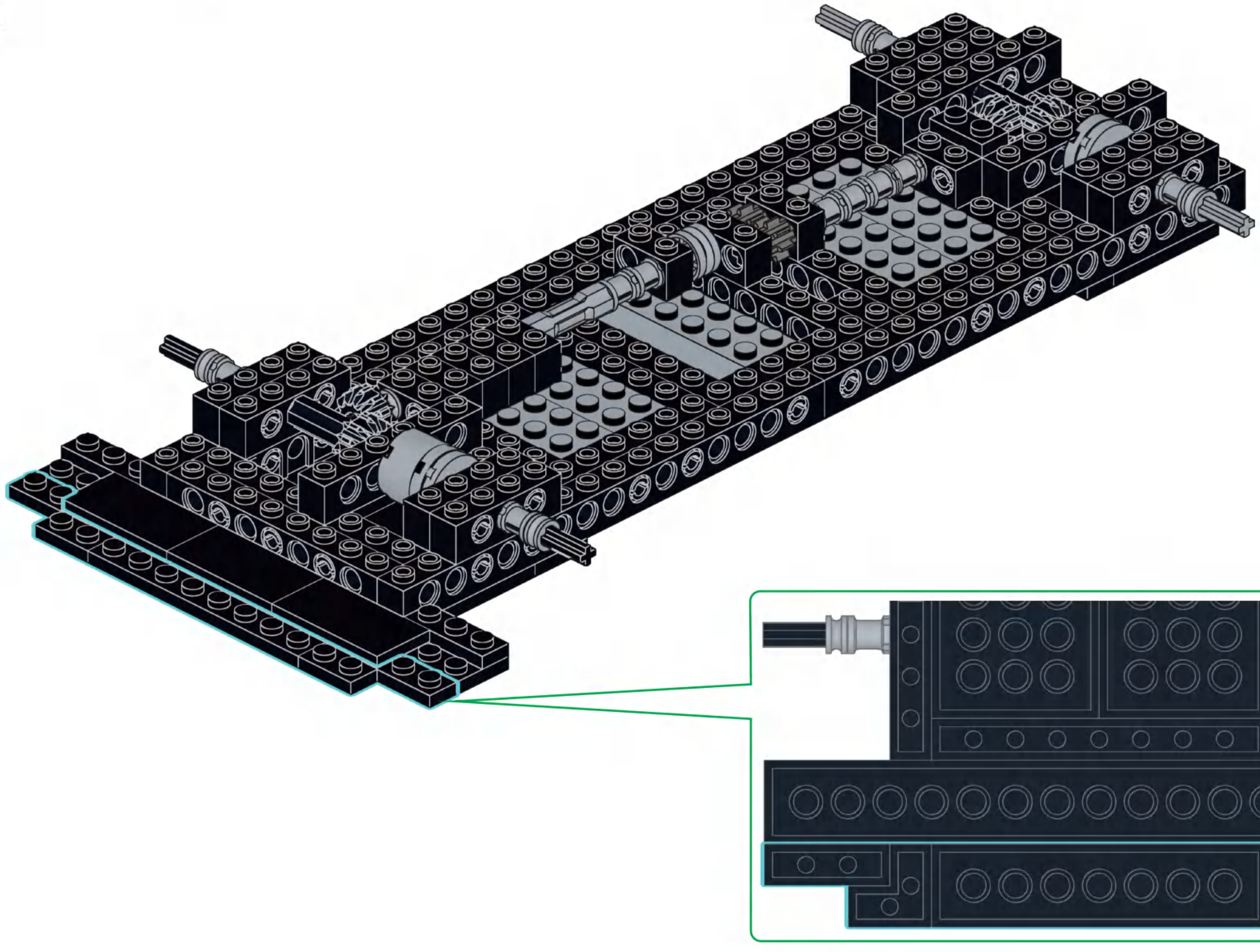

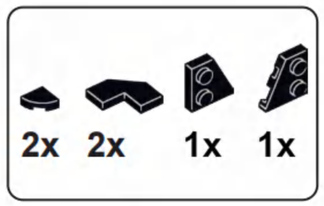

A40

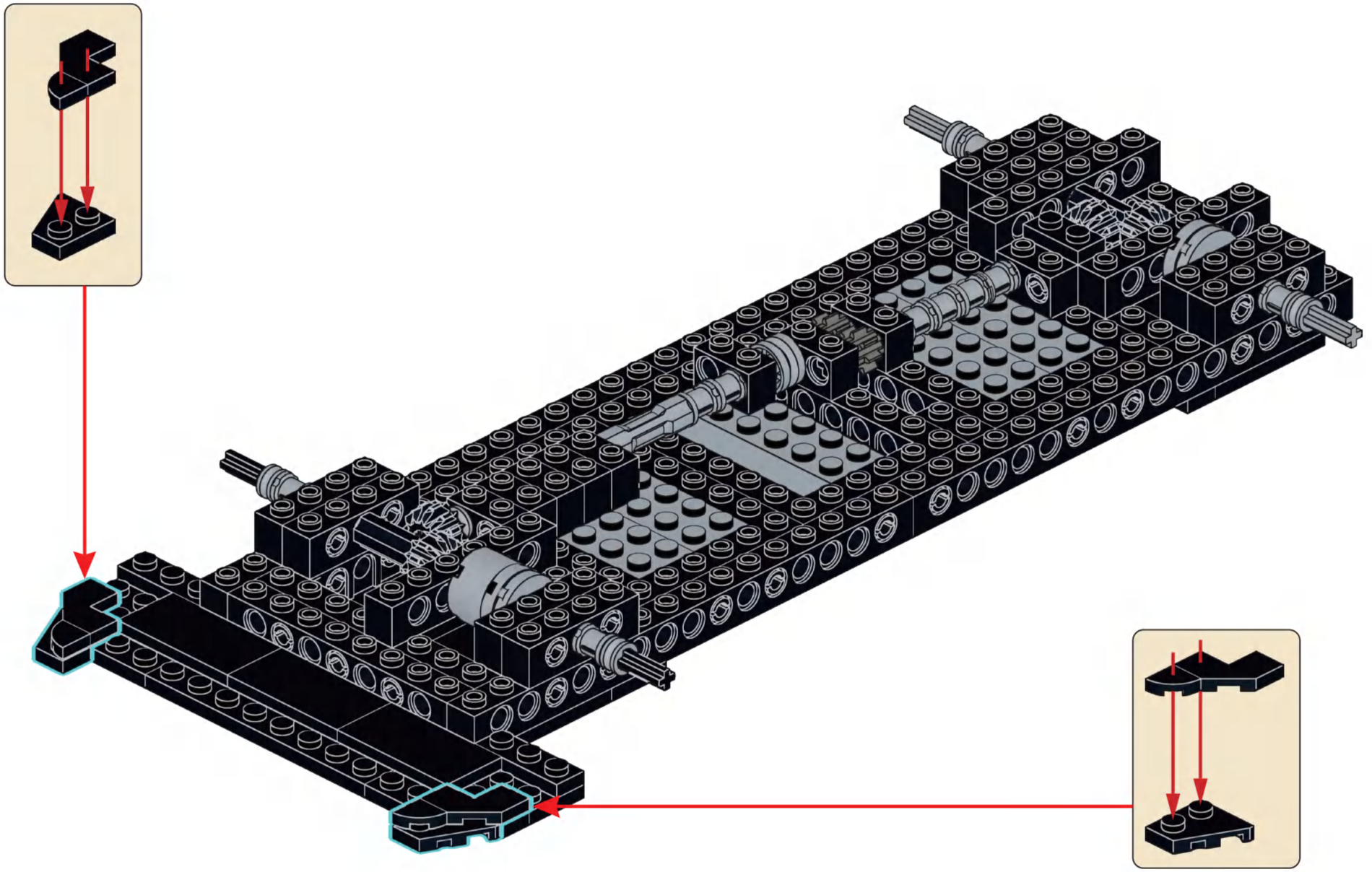

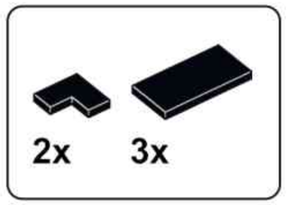

A41

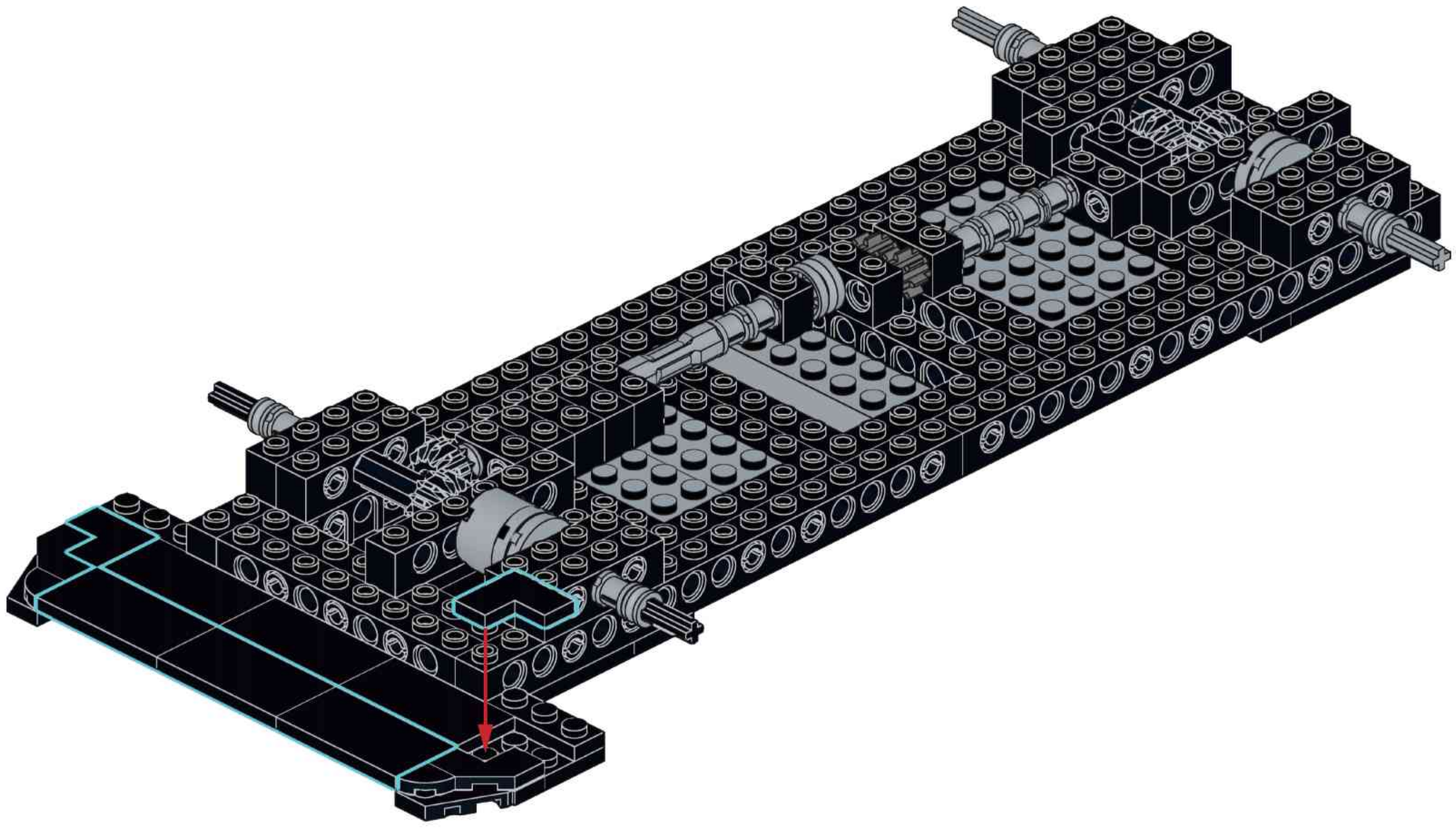

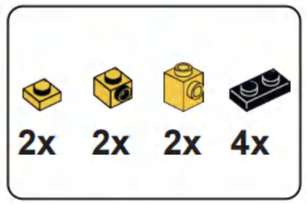

A42

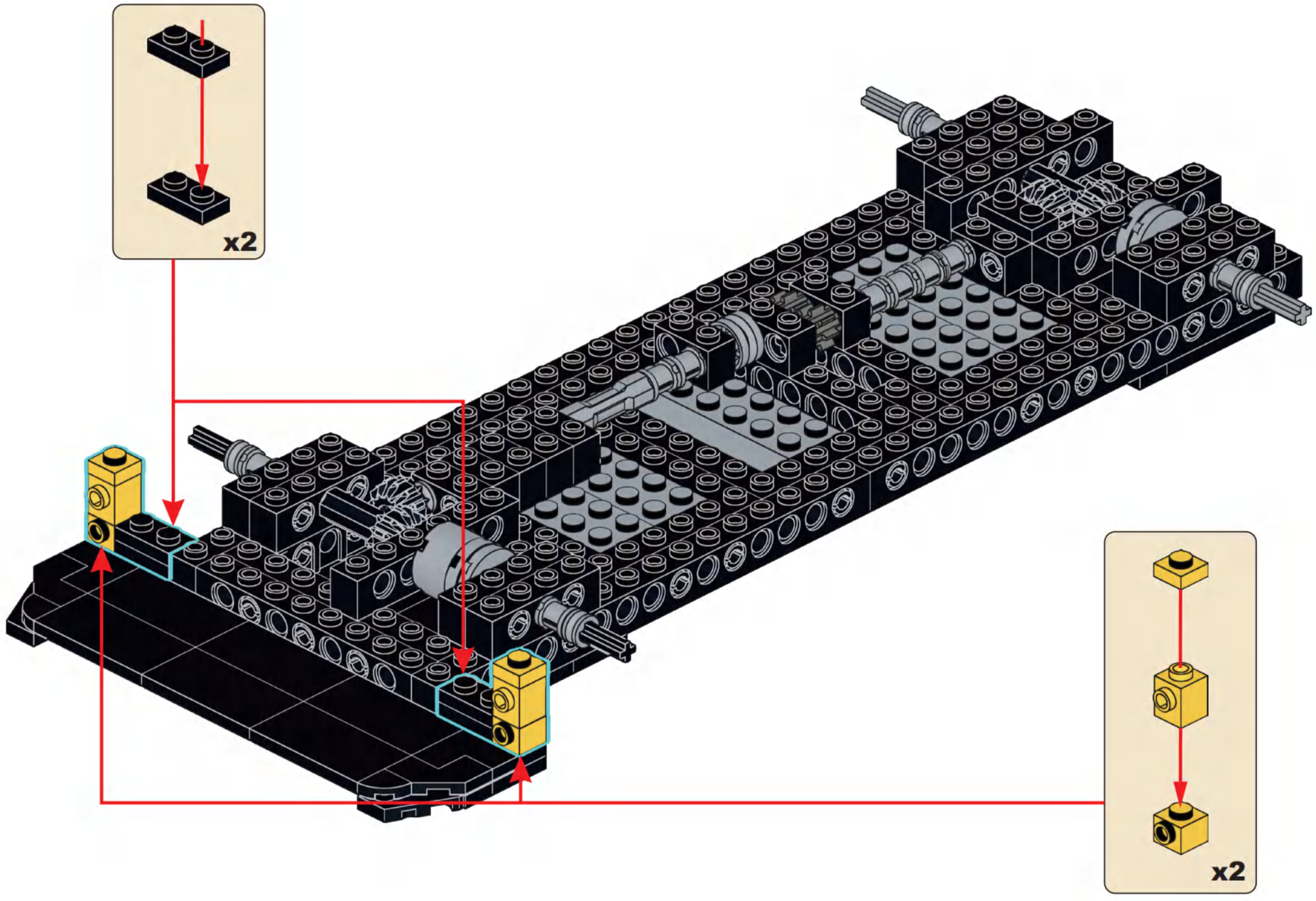

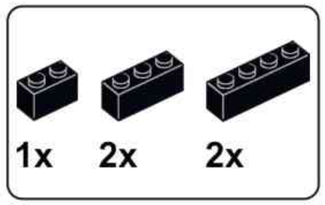

A43

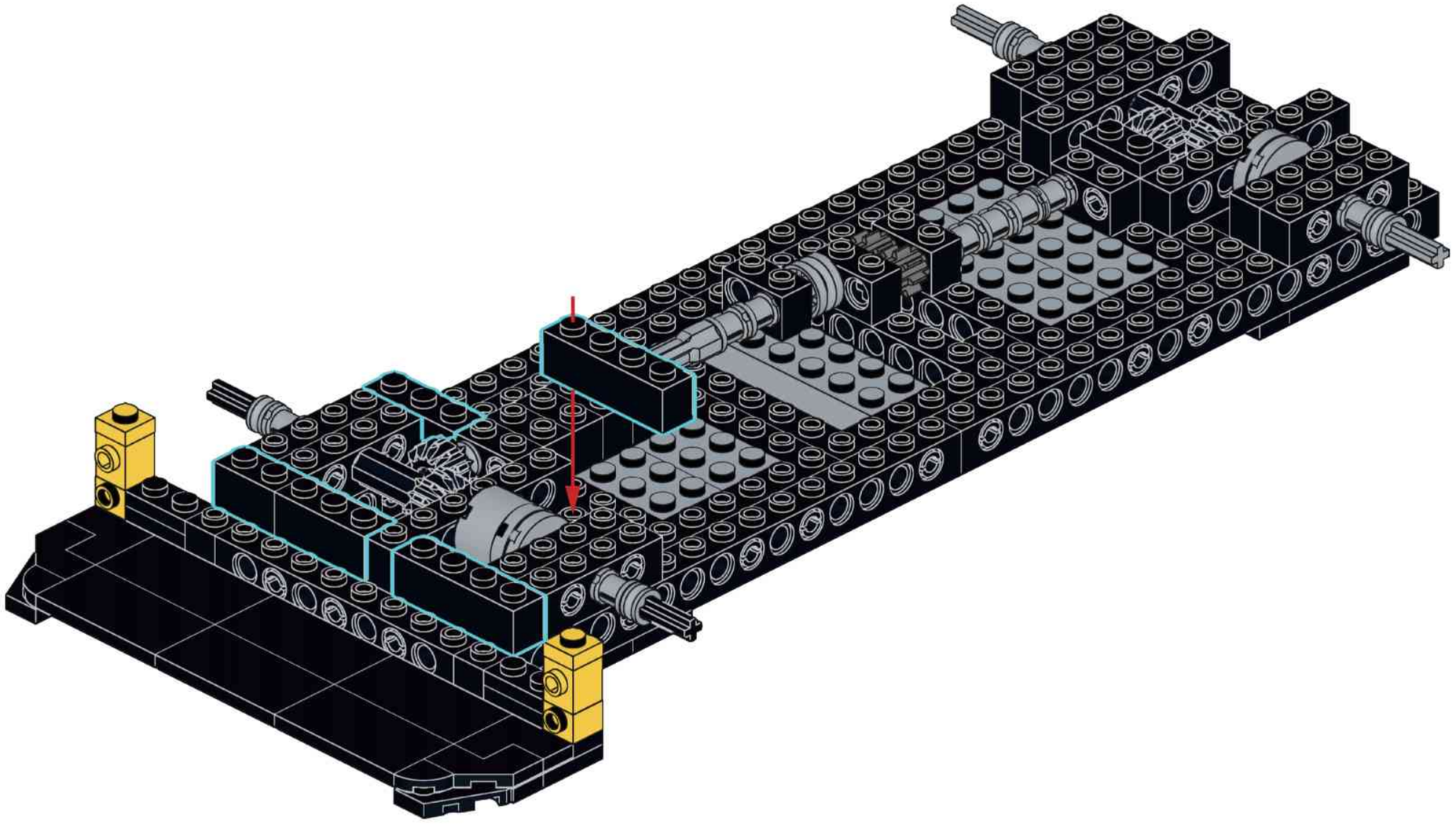

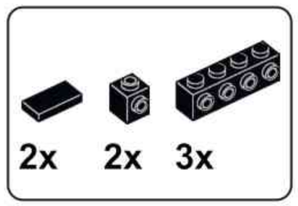

A44

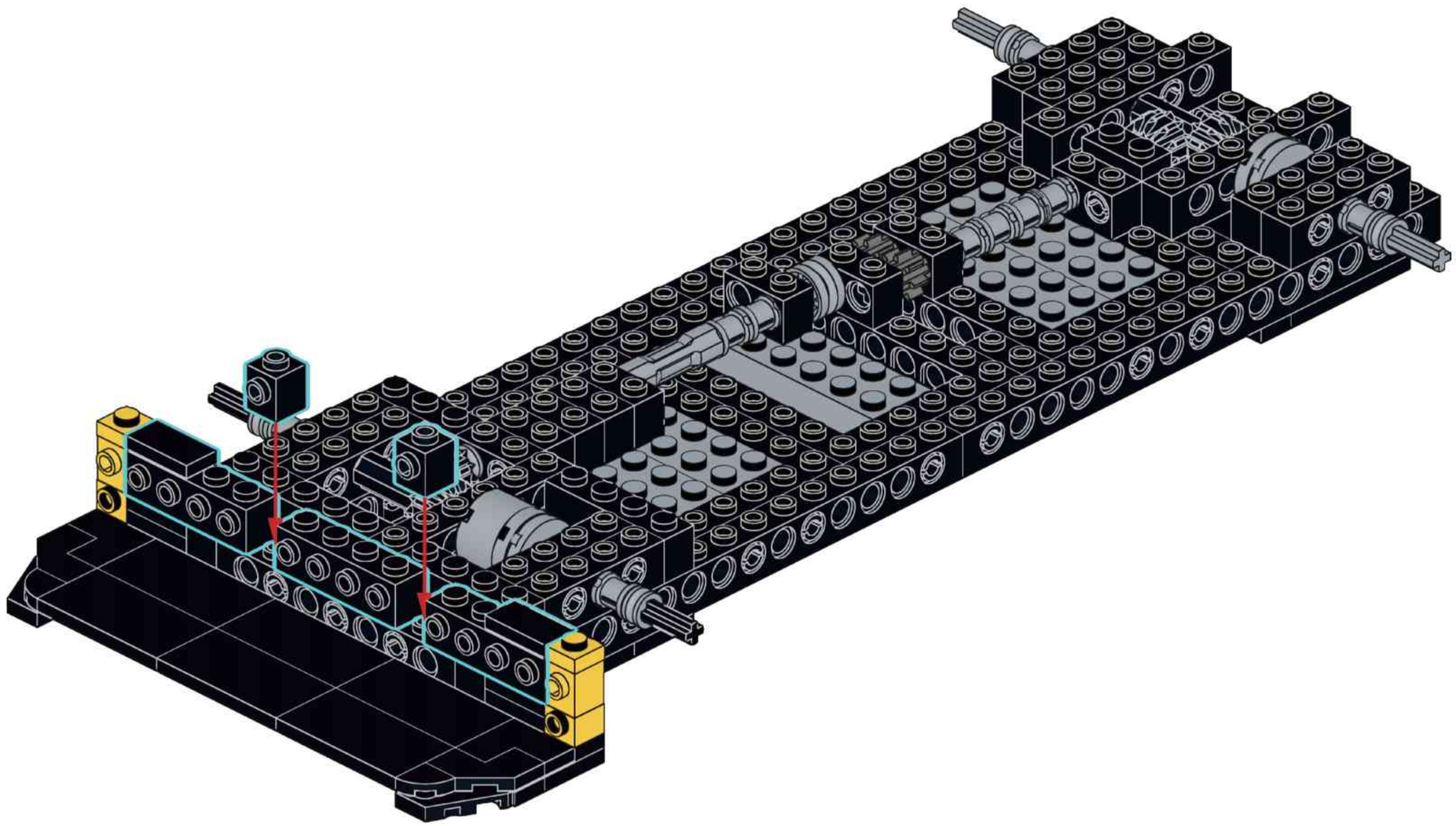

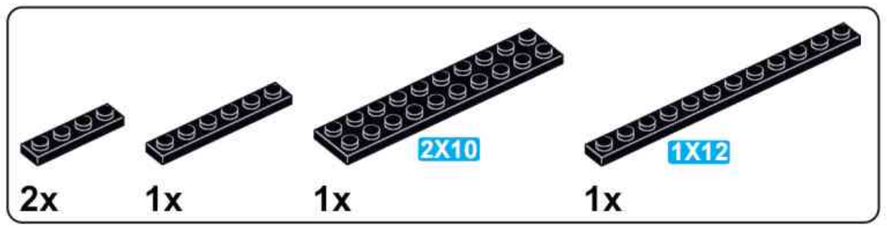

A45

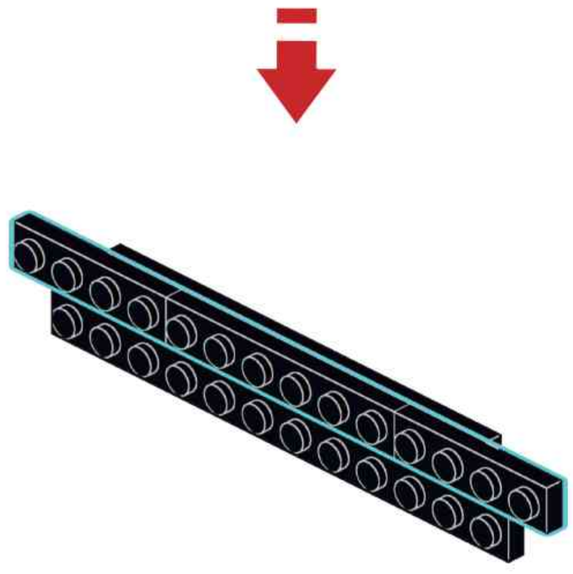

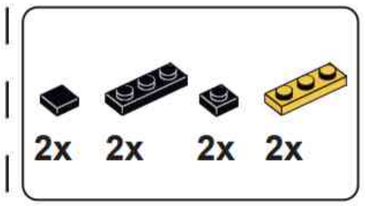

A46

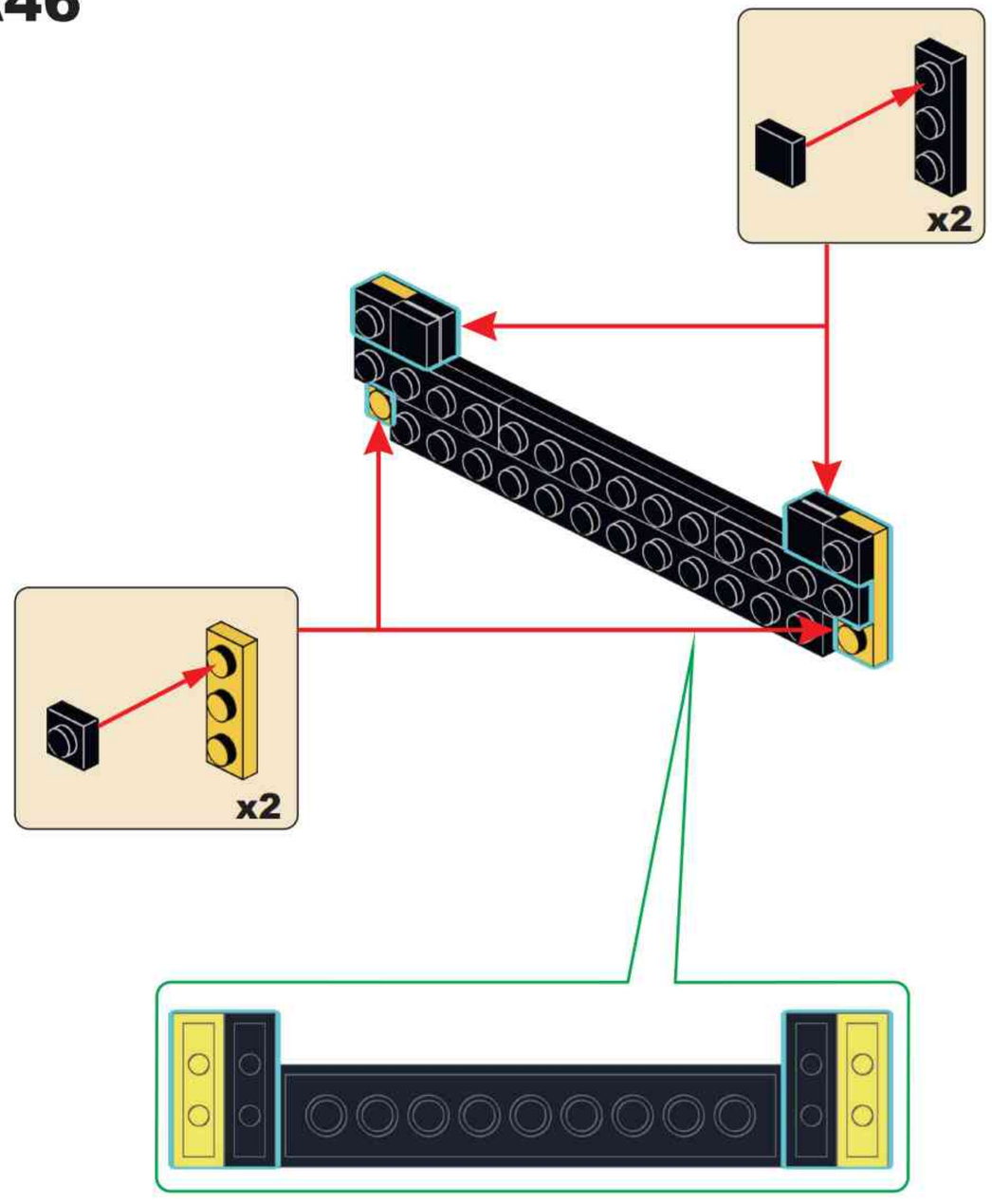

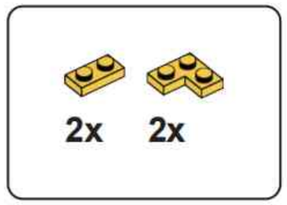

A47

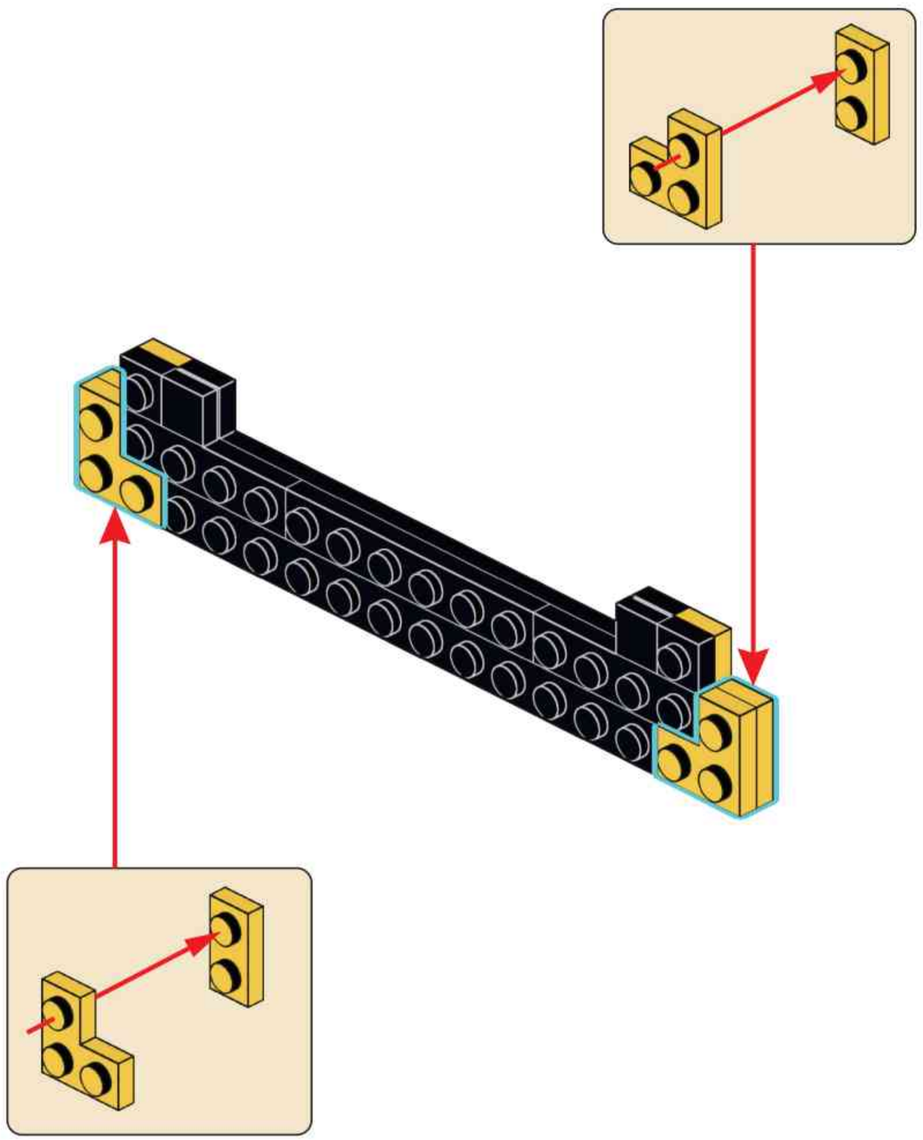

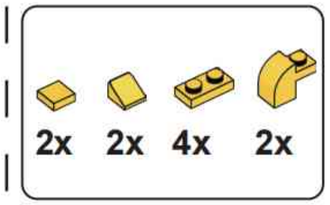

A48

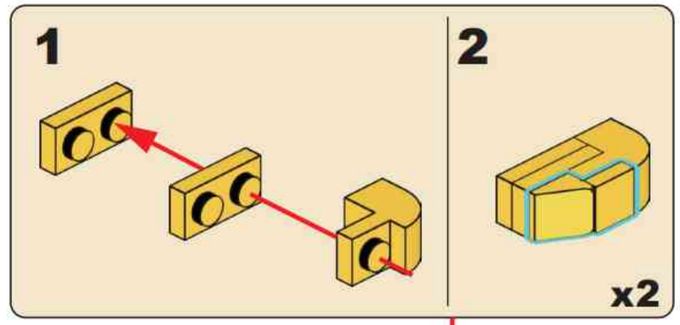

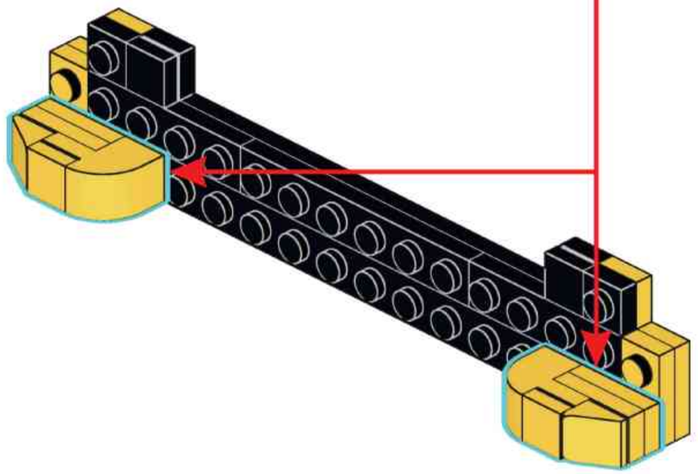

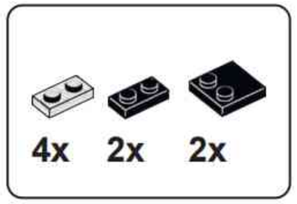

A49

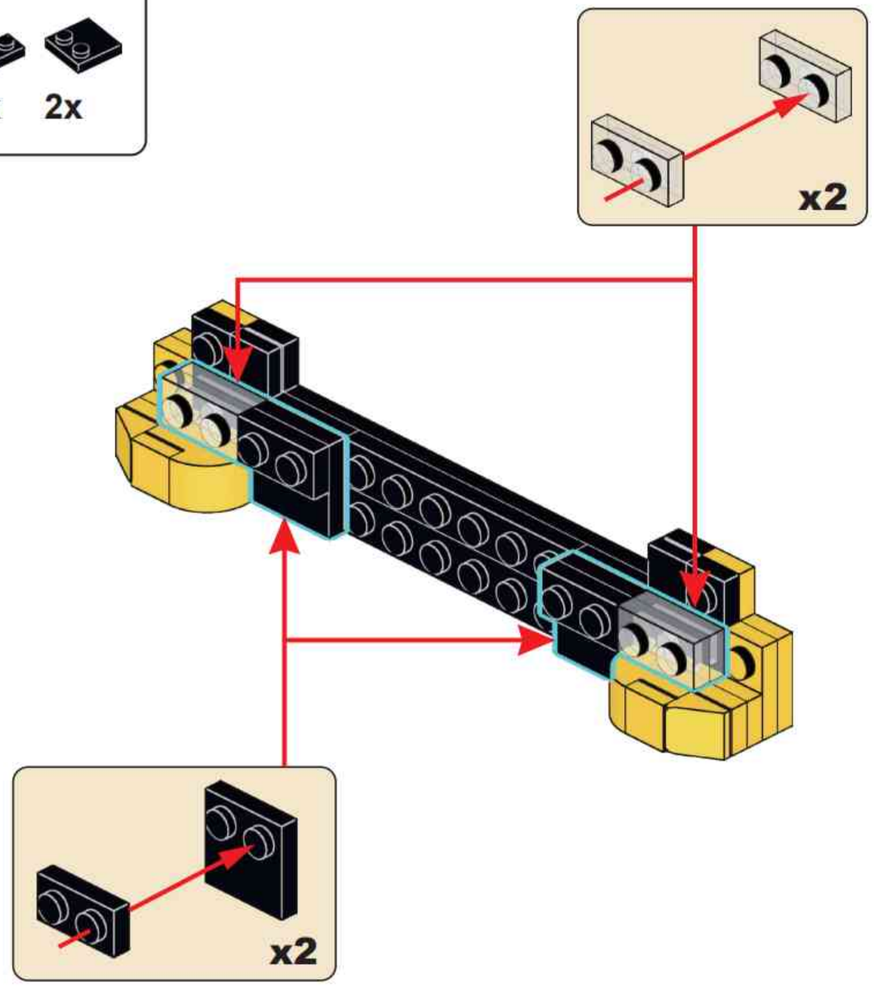

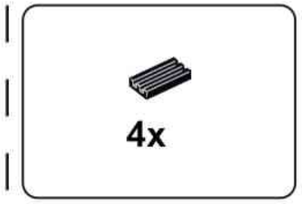

A50

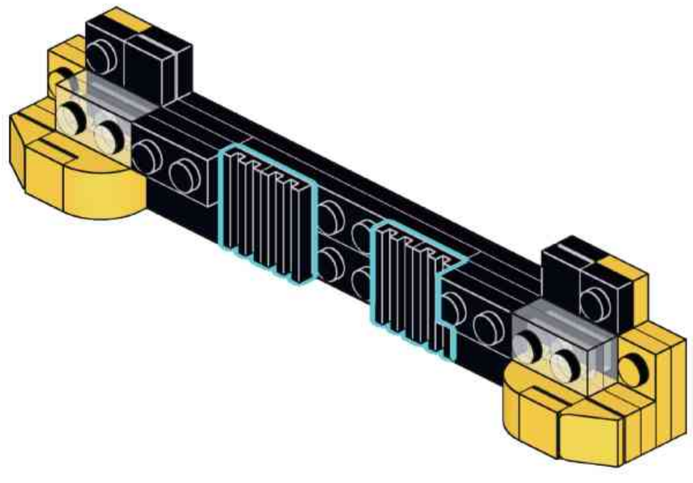

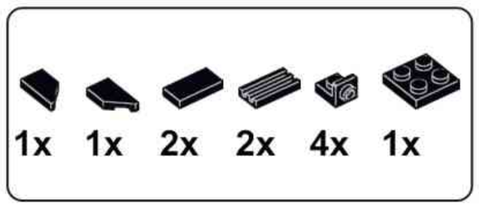

A51

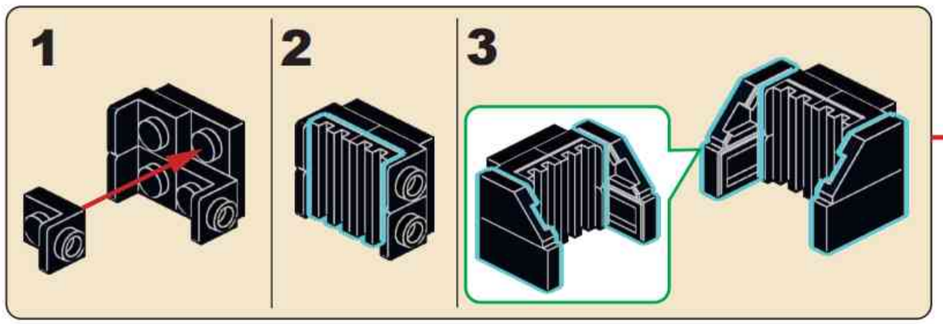

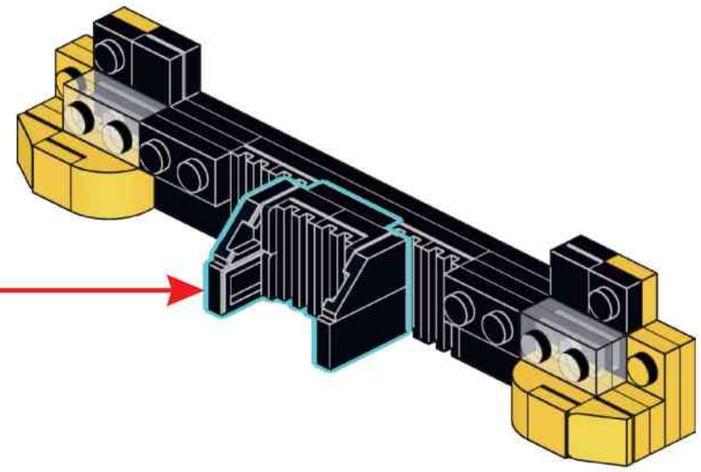

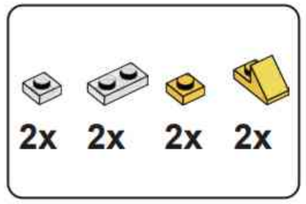

A52

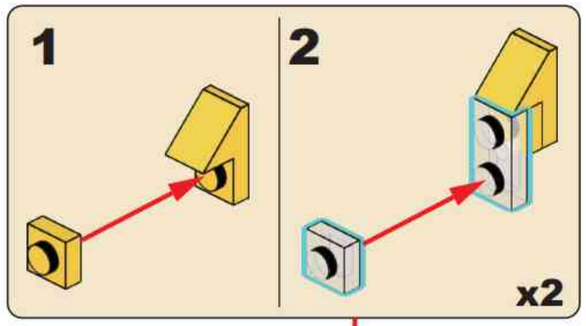

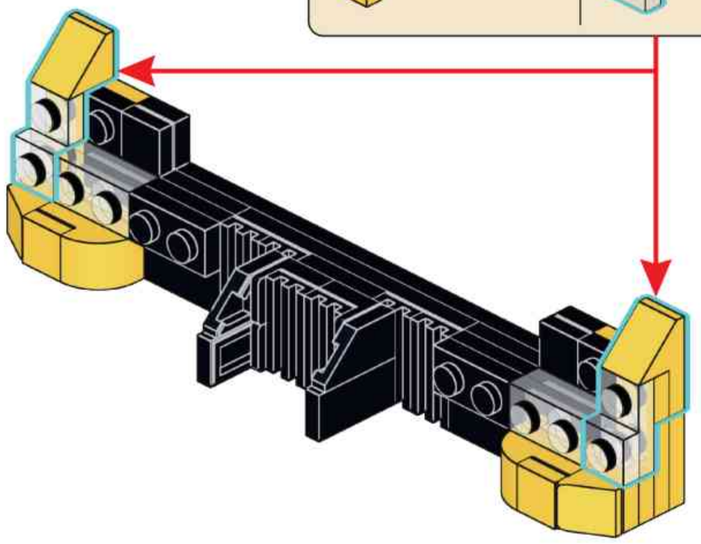

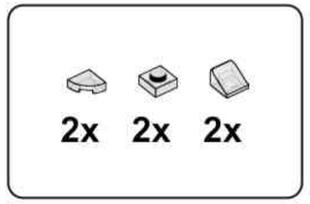

A53

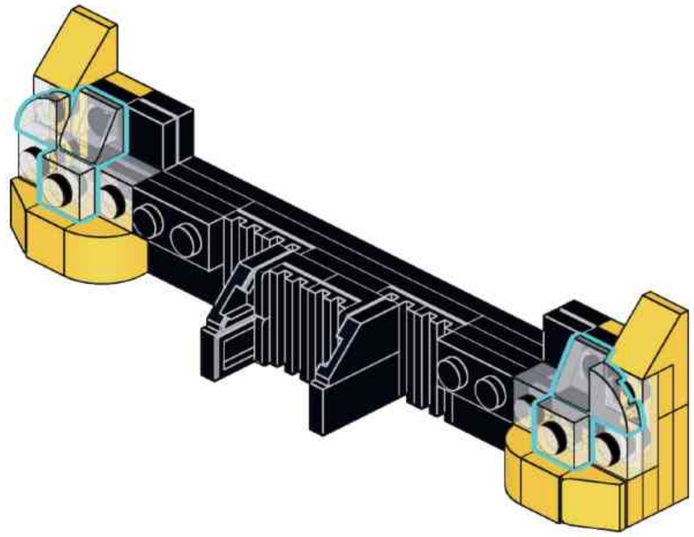

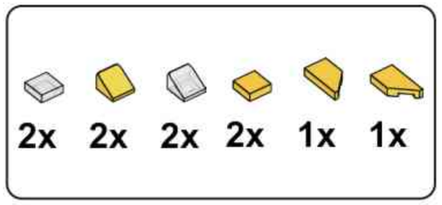

A54

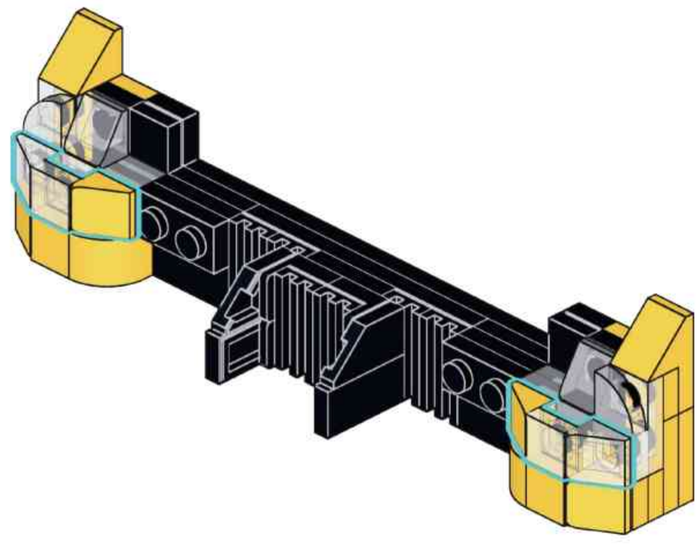

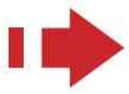

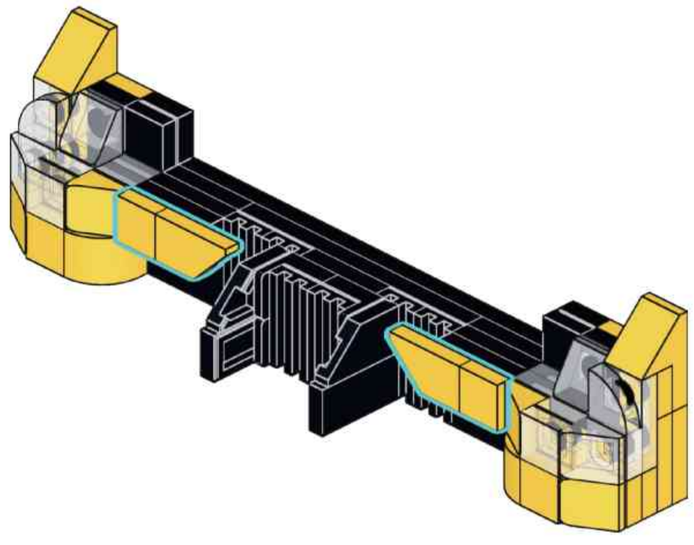

A55

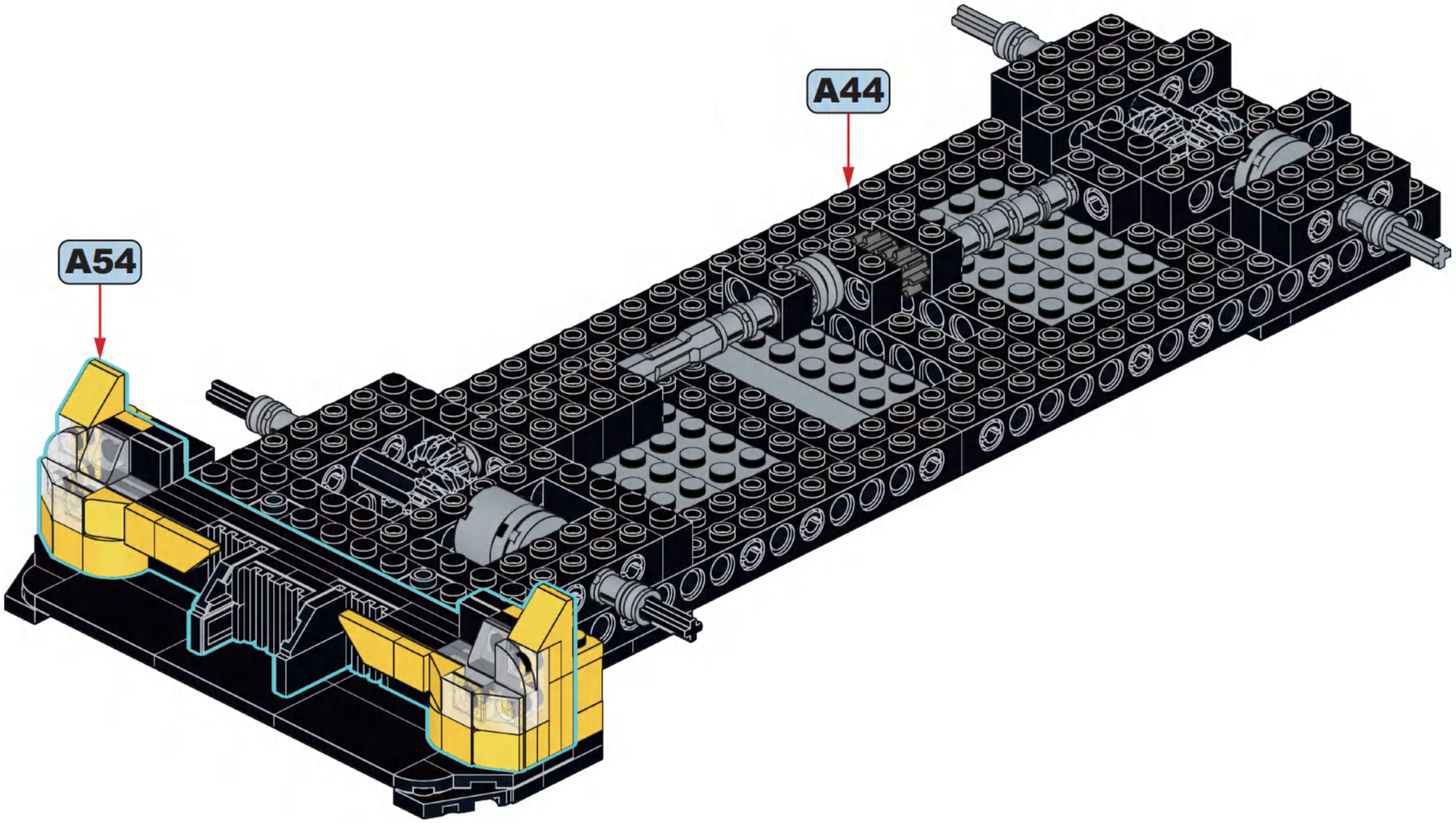

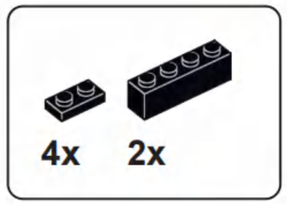

A56

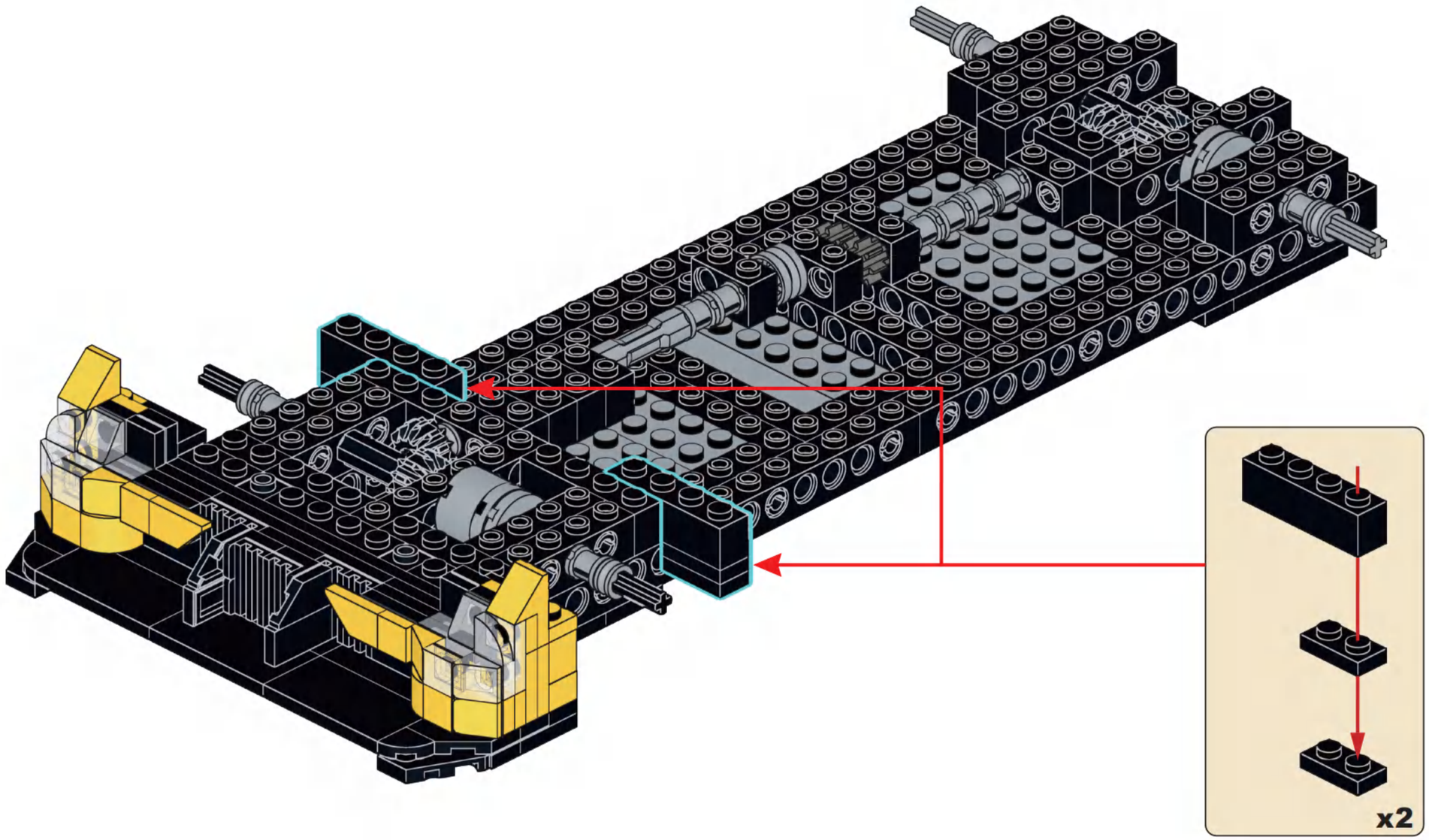

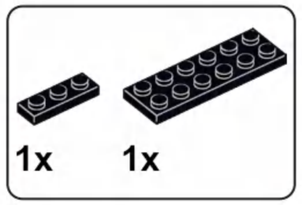

A57

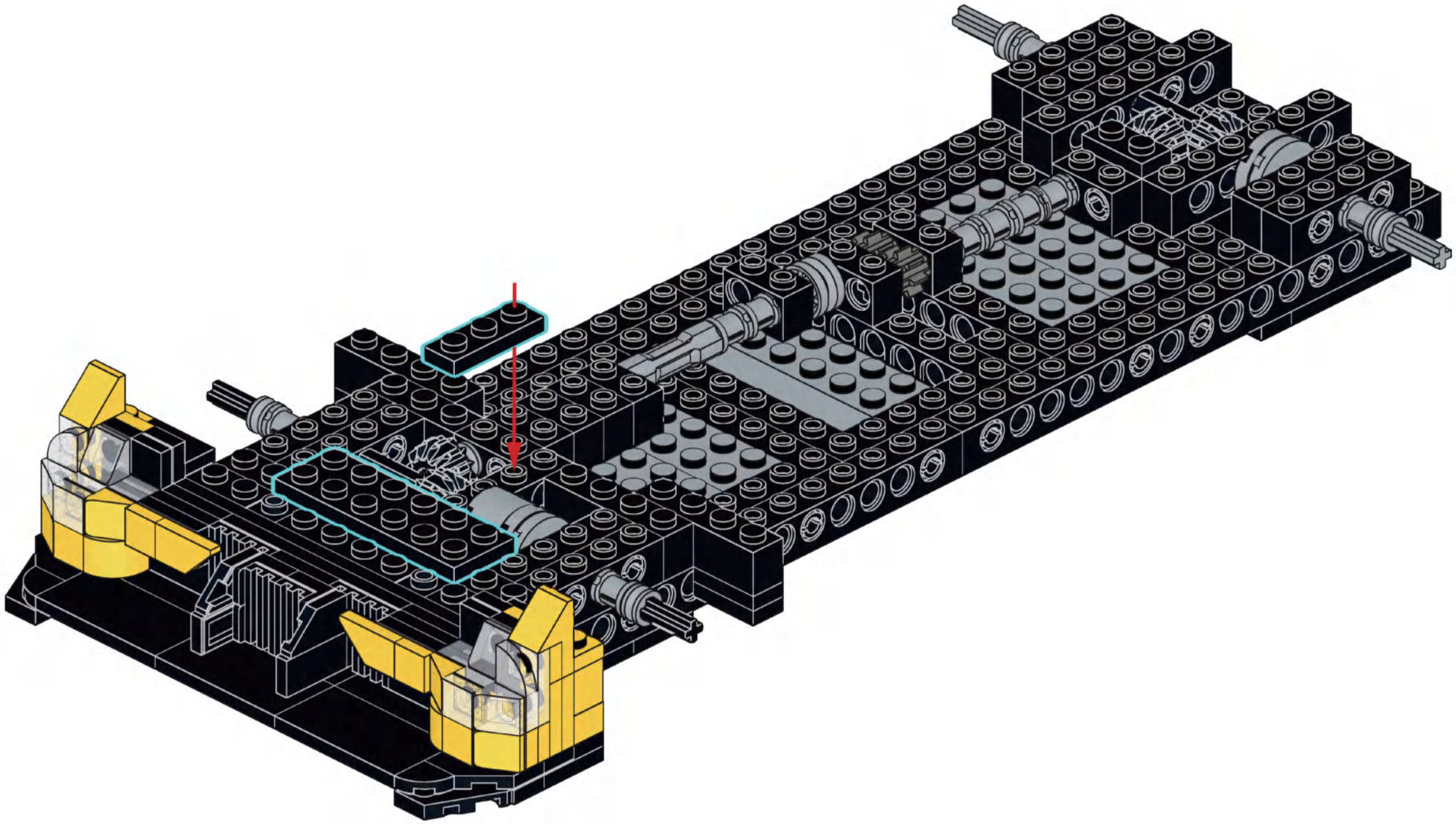

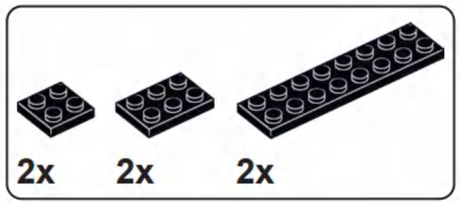

A58

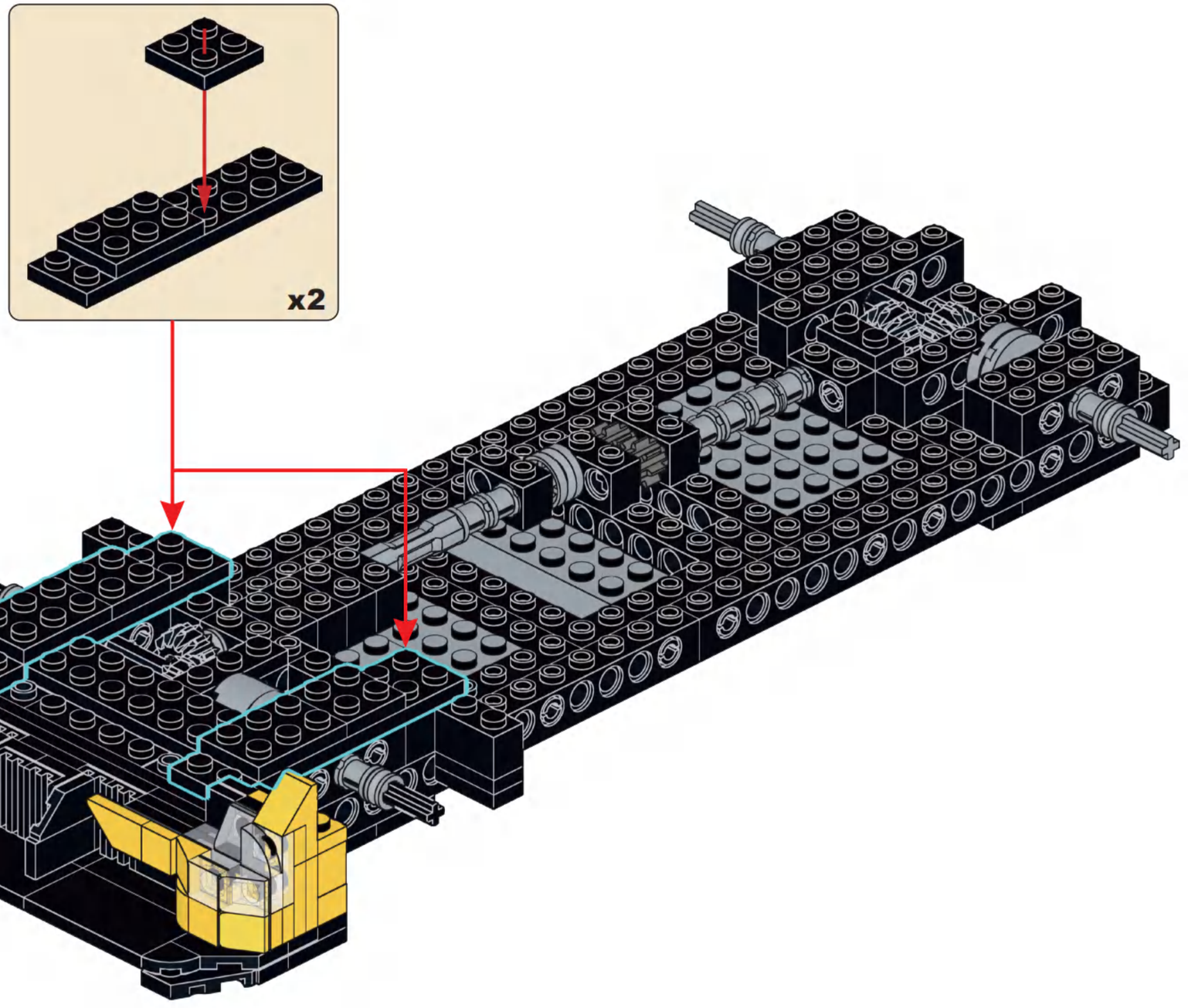

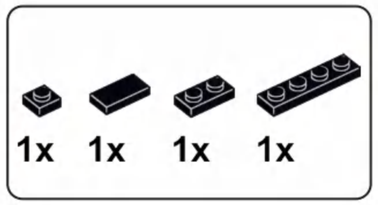

A59

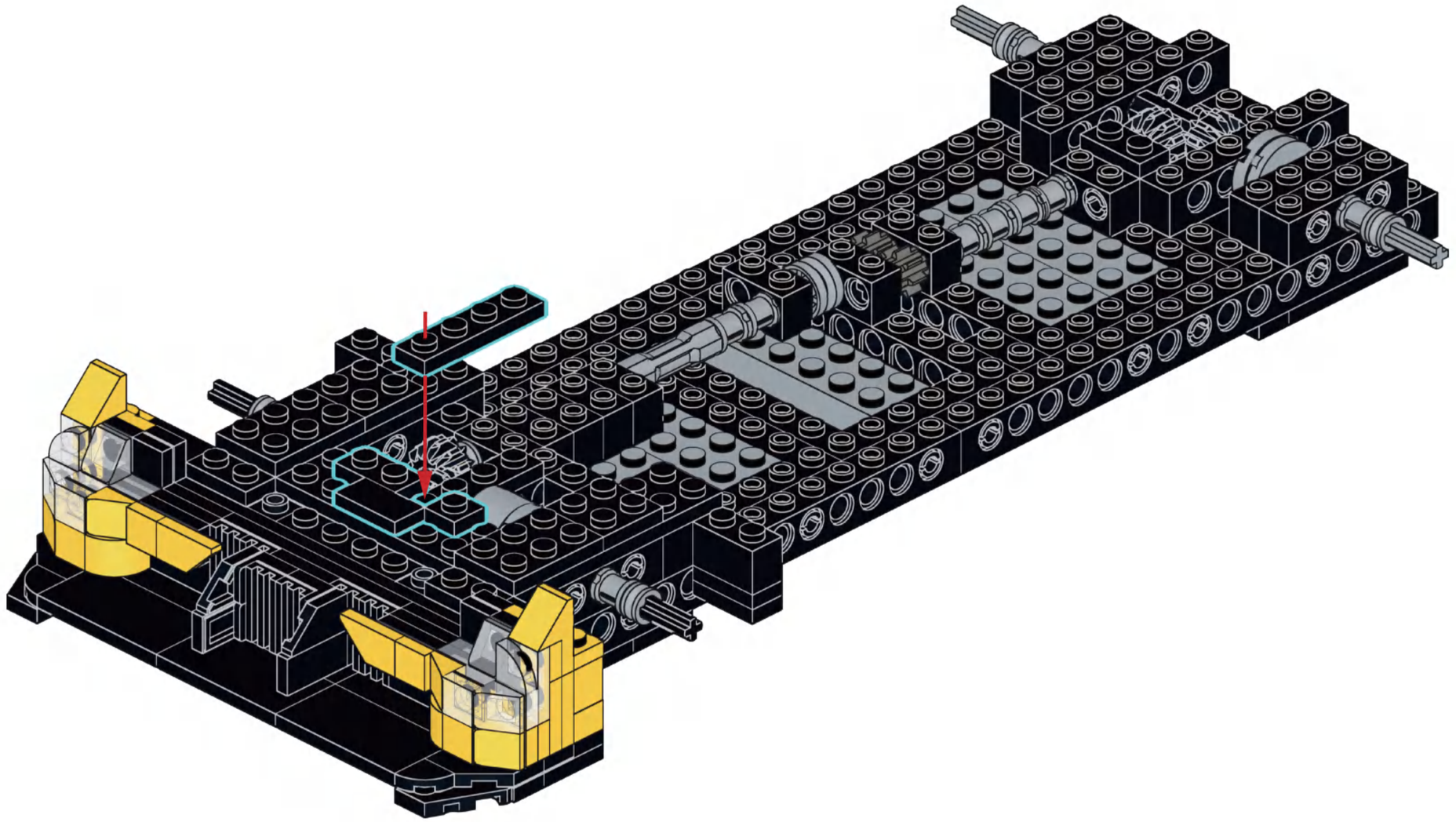

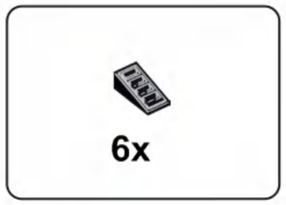

A60

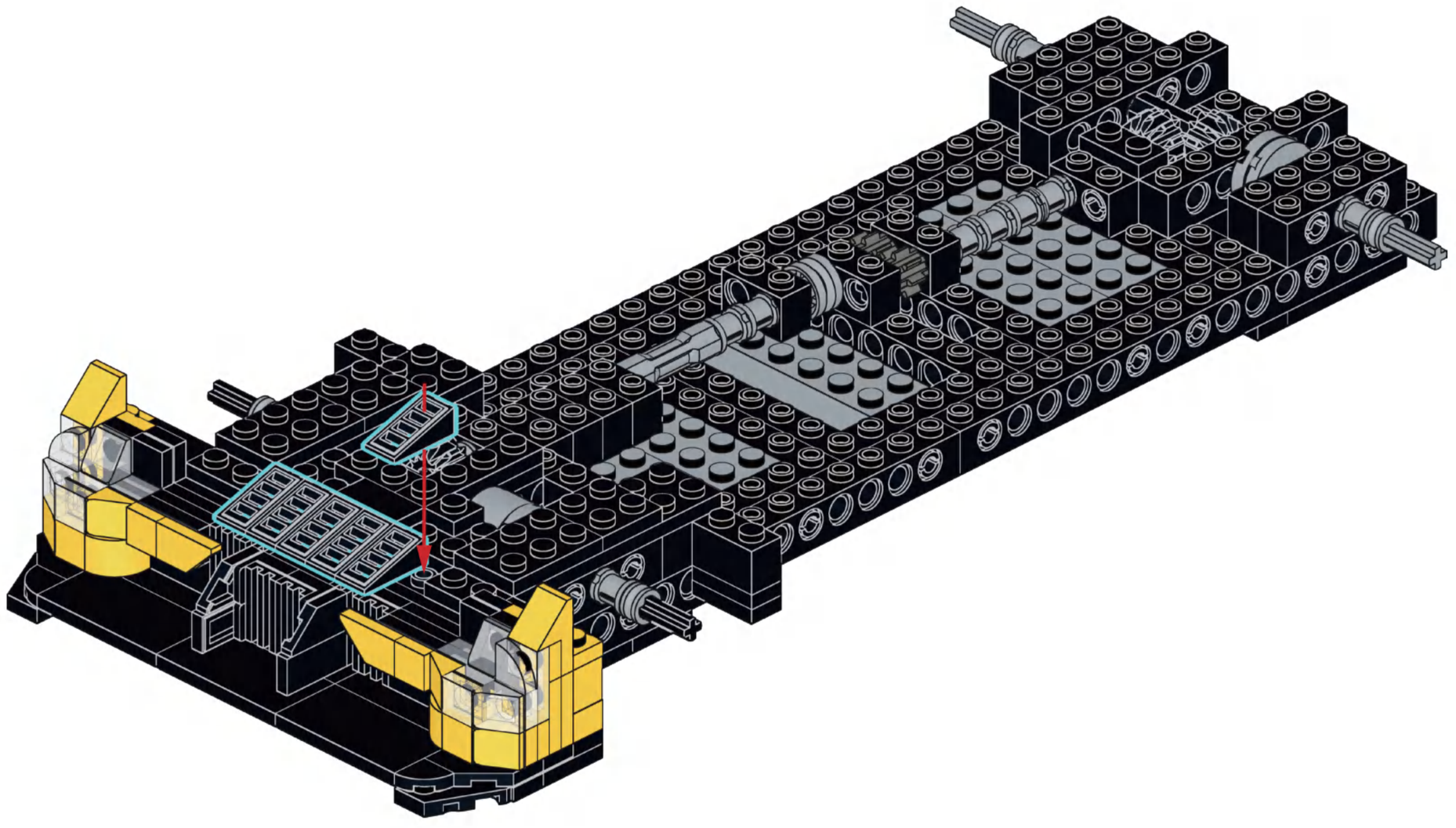

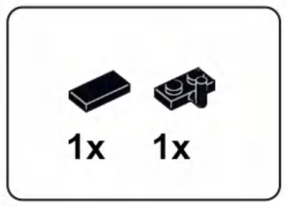

A61

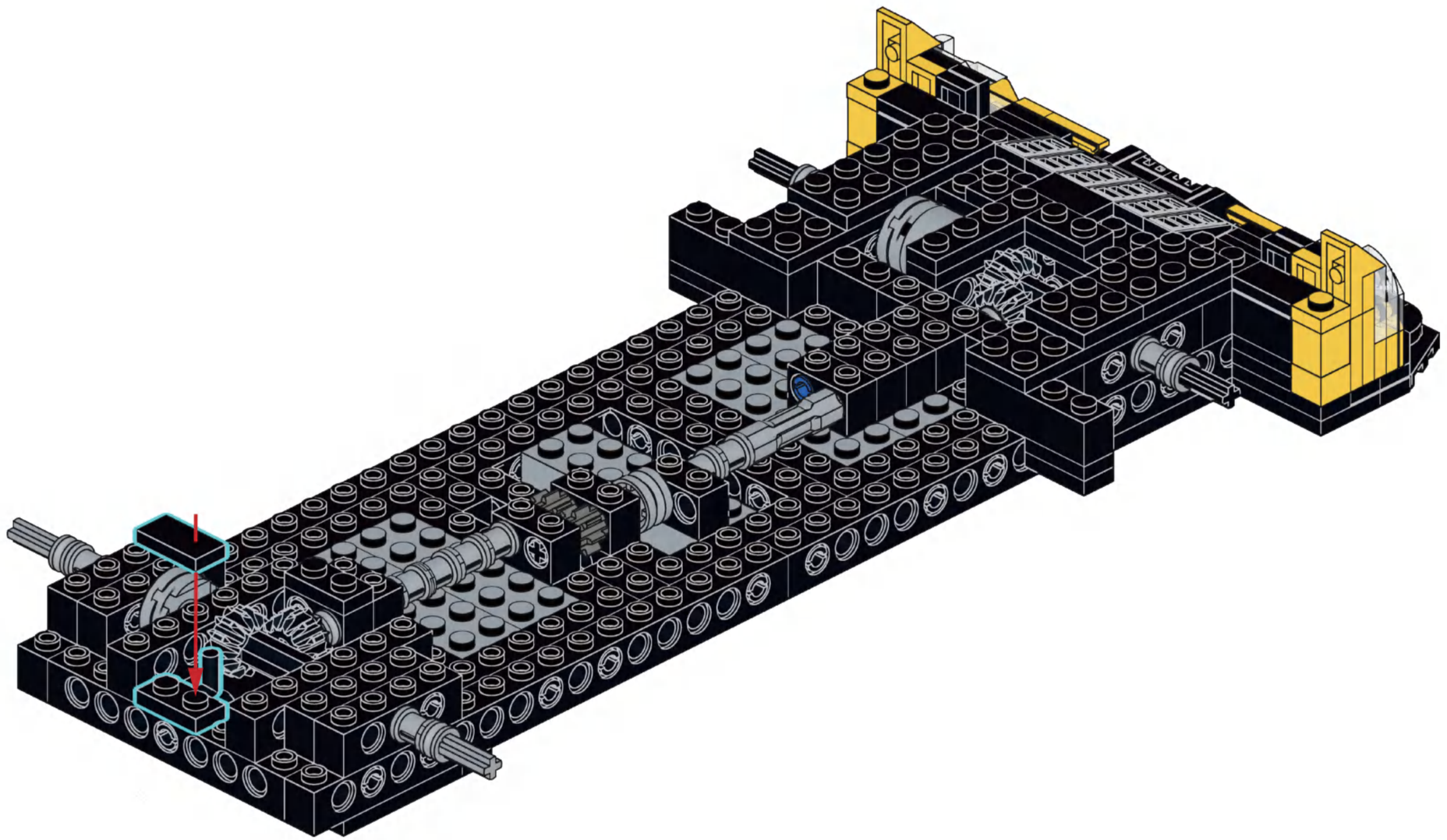

A62

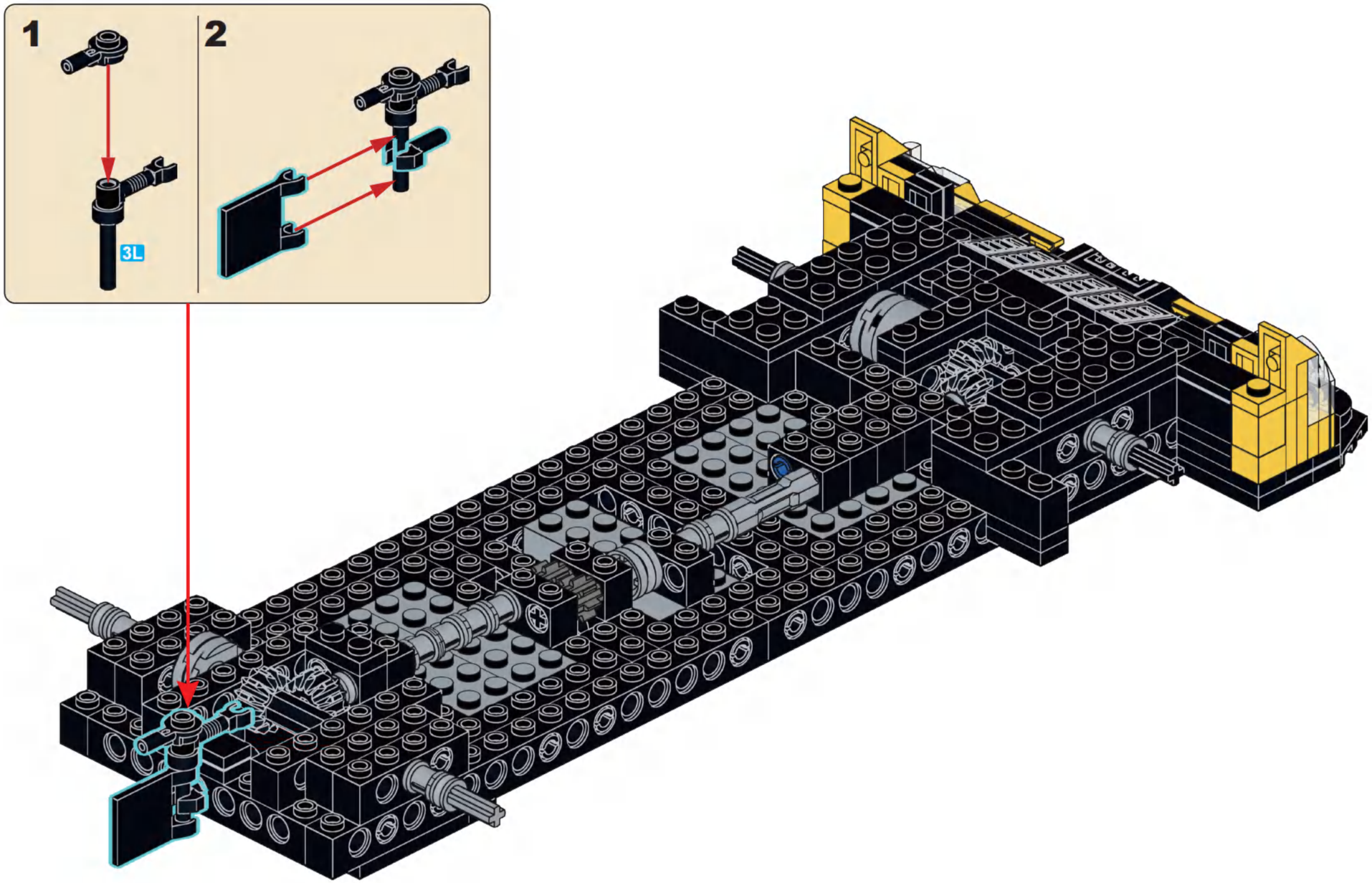

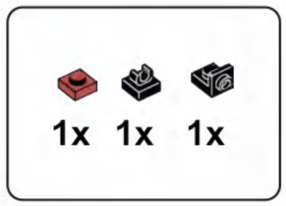

A63

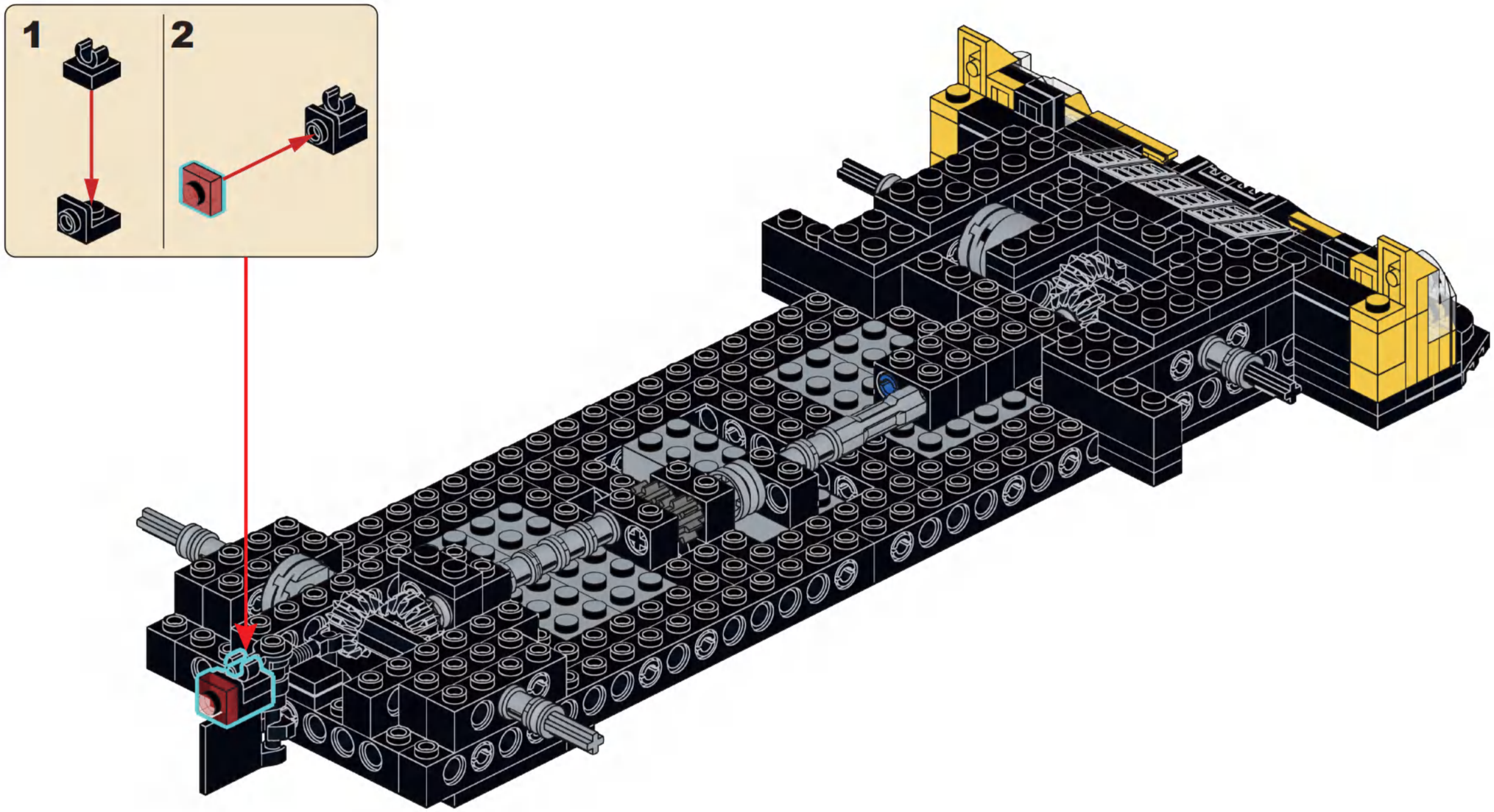

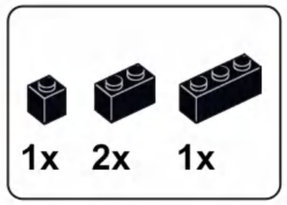

A64

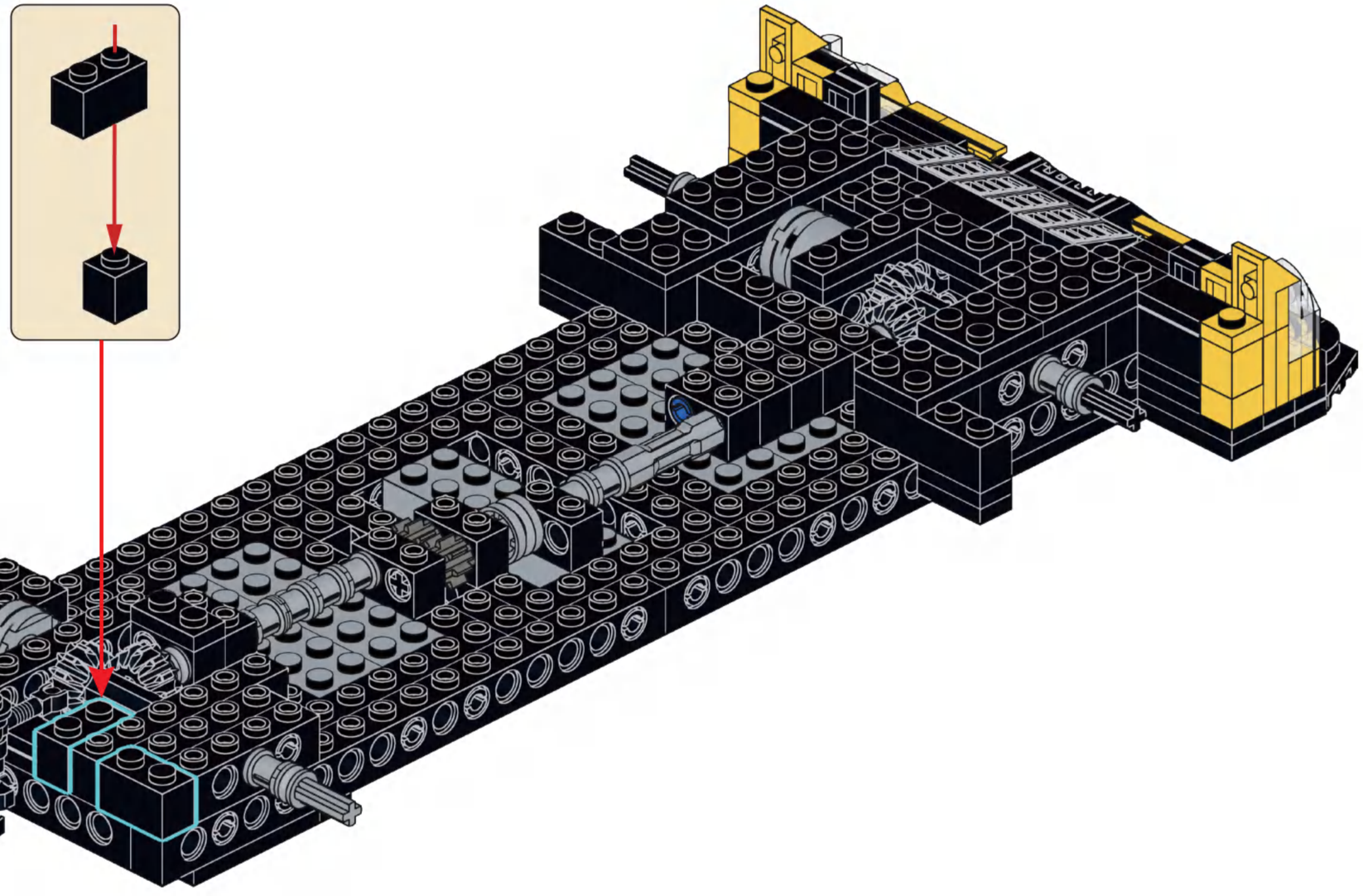

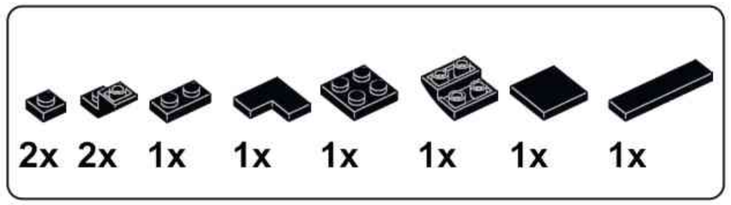

A65

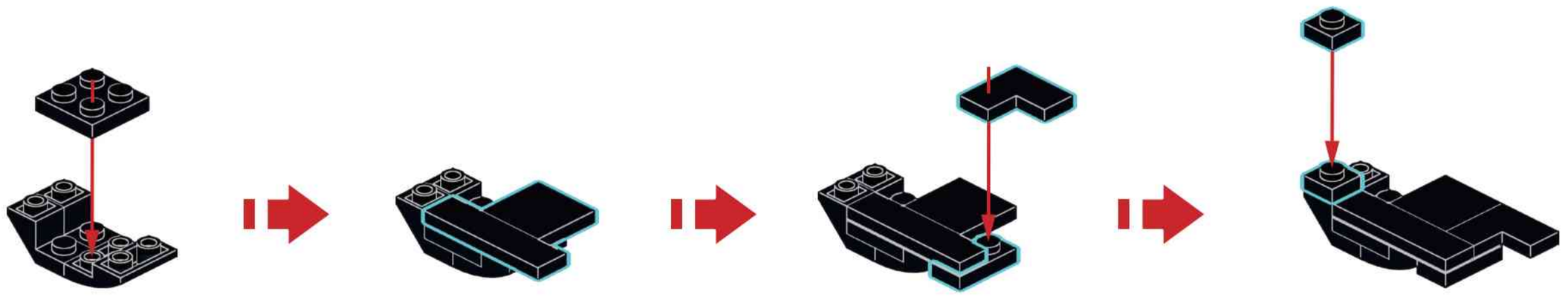

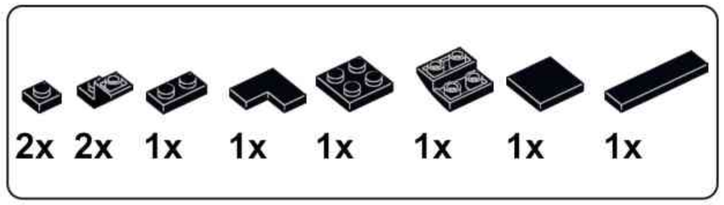

A66

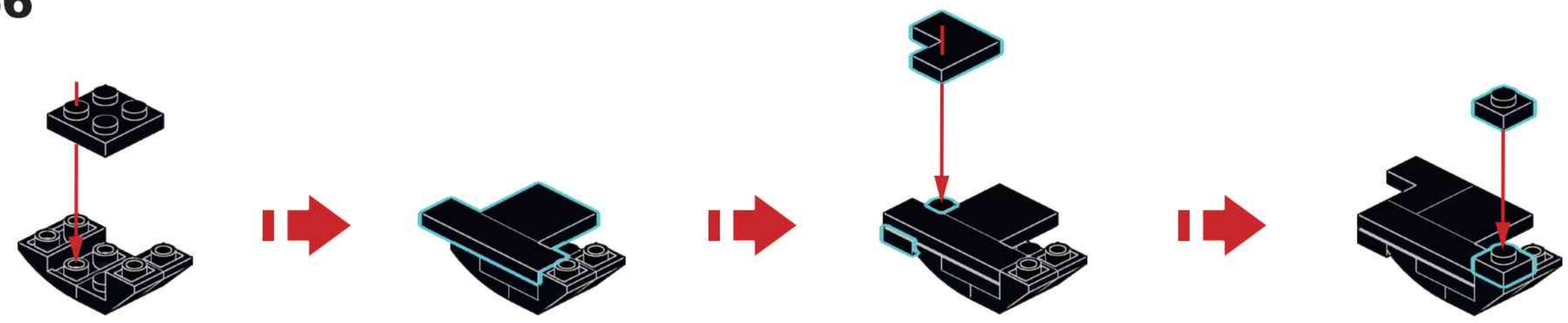

A67

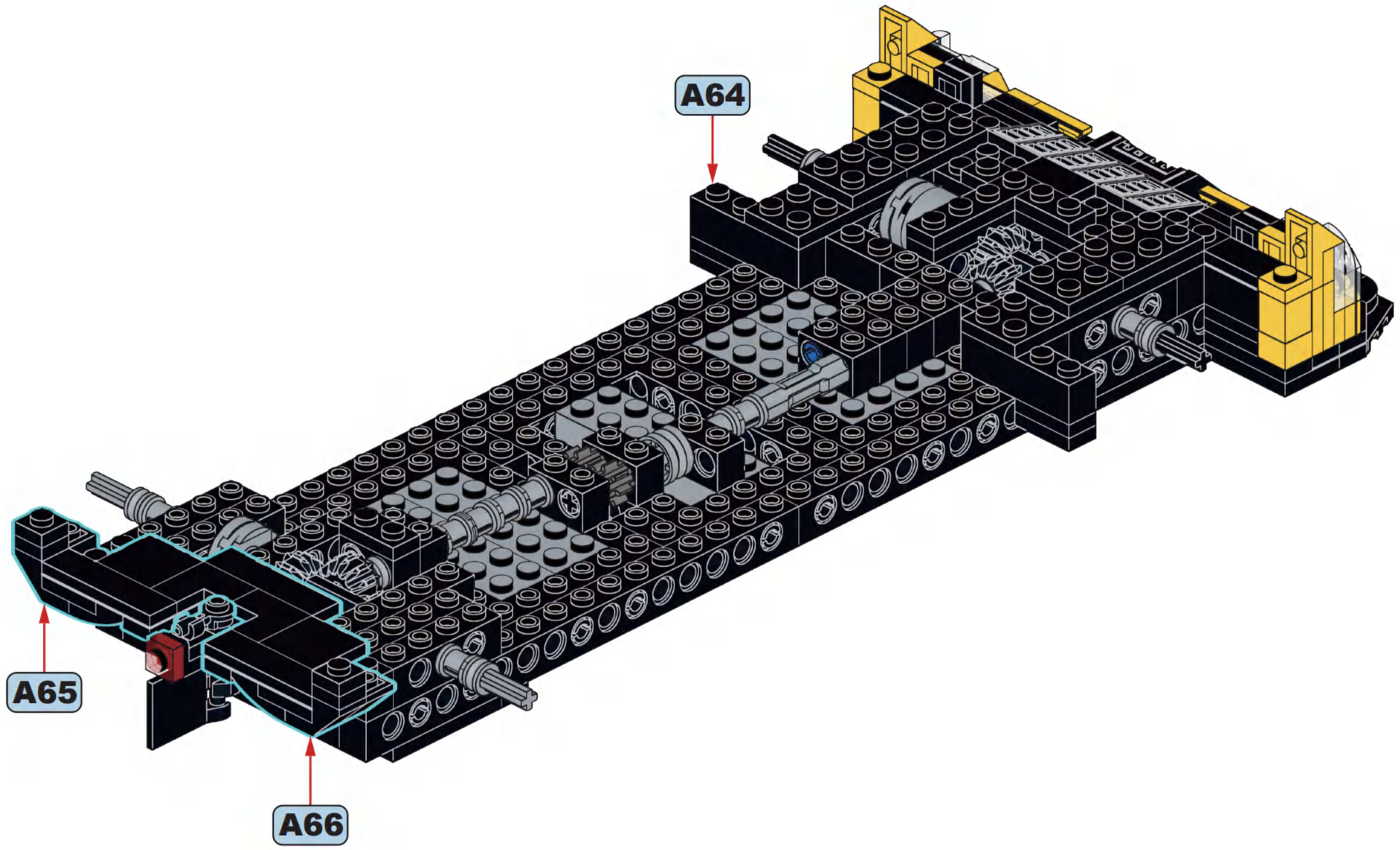

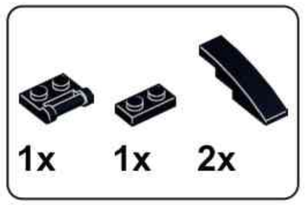

A68

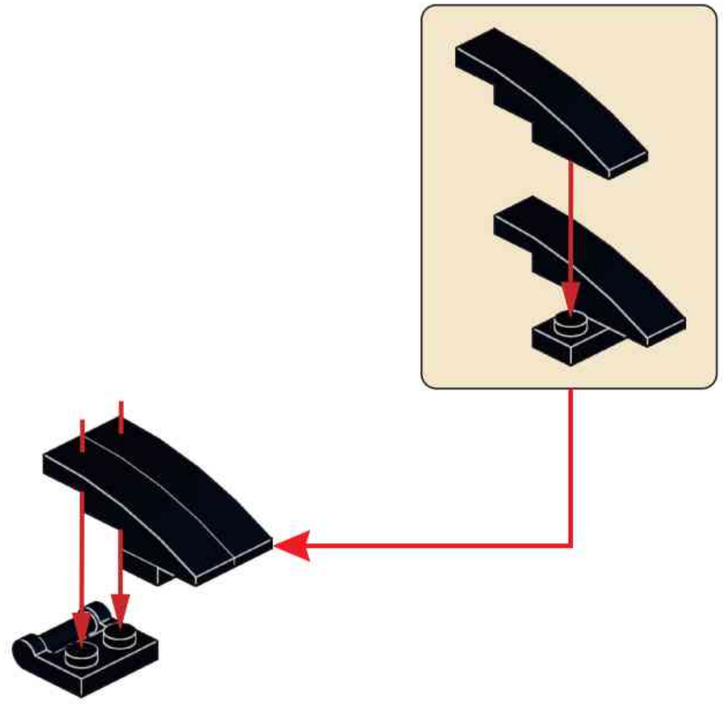

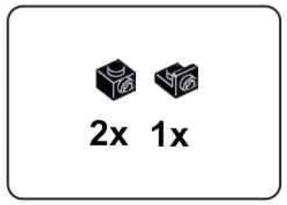

A69

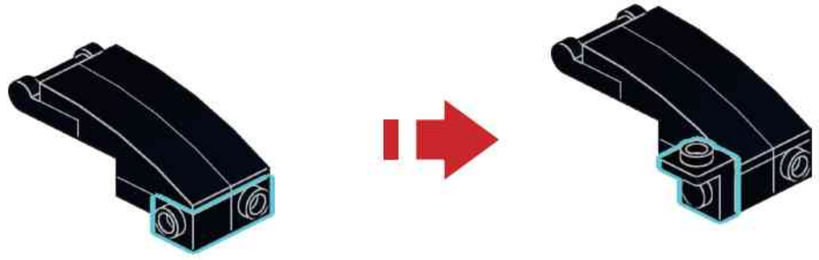

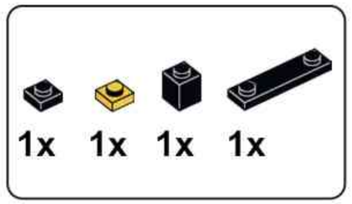

A70

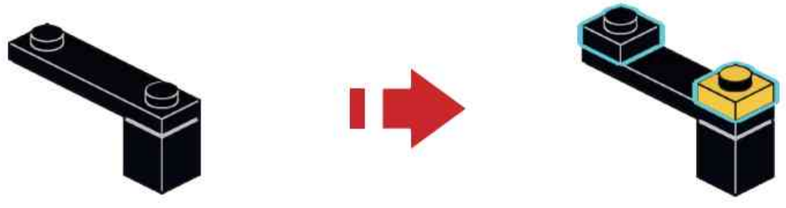

A71

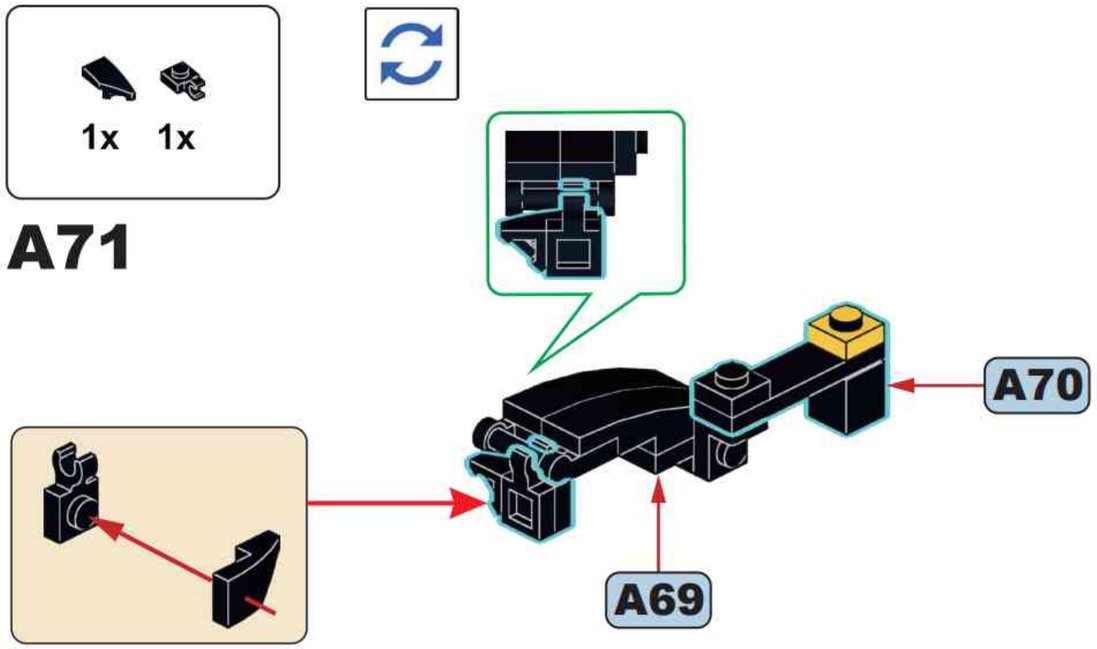

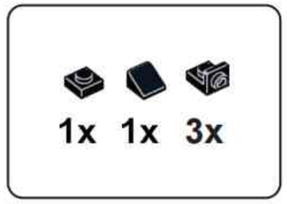

A72

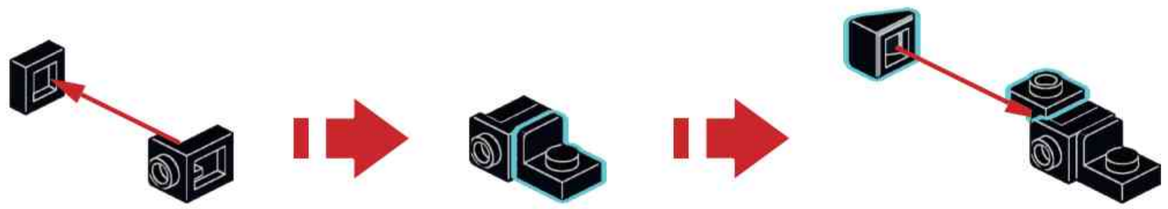

A73

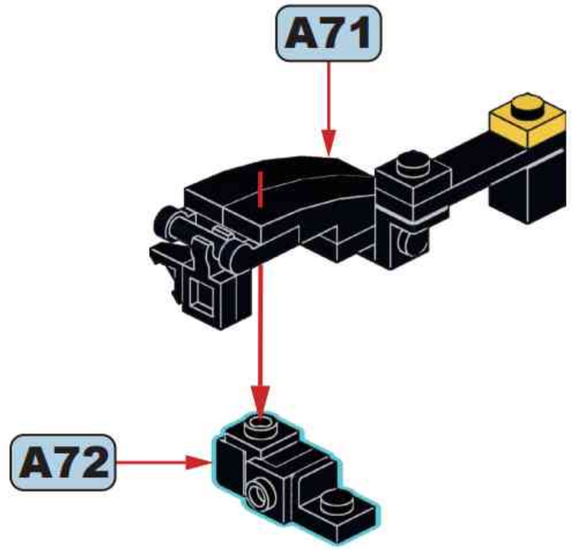

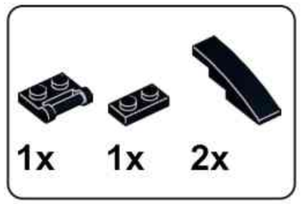

A74

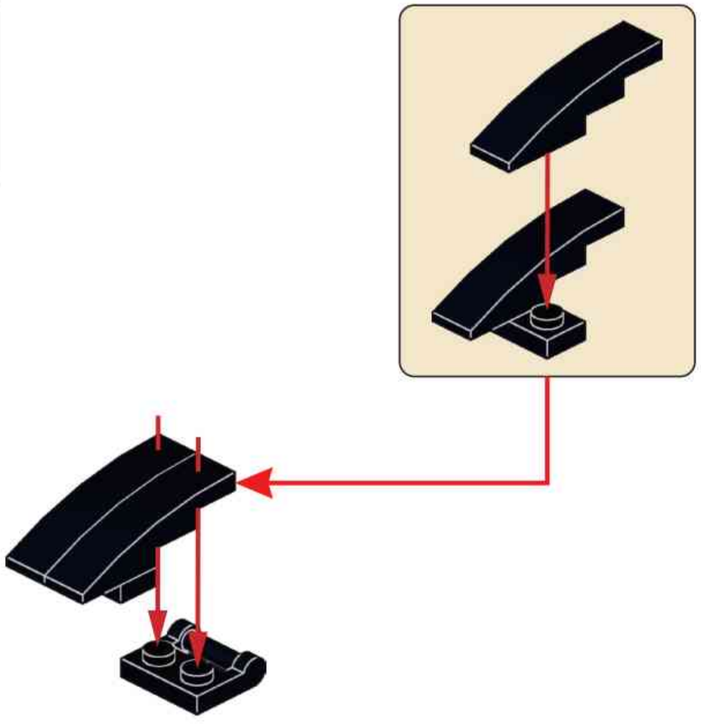

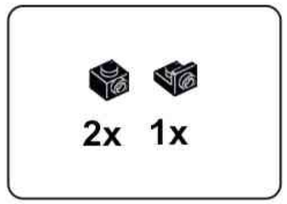

A75

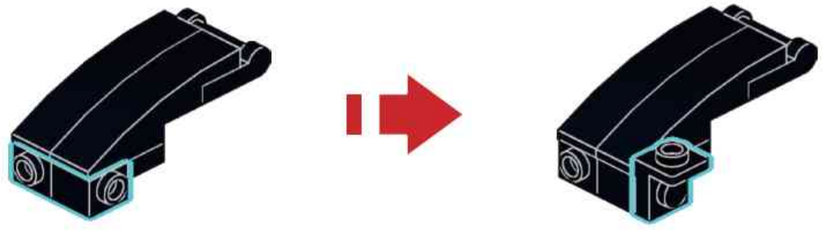

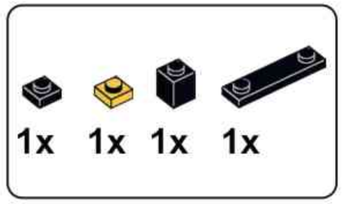

A76

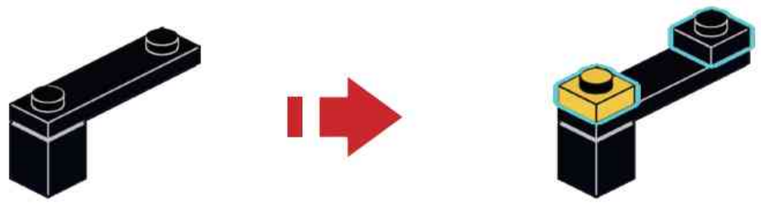

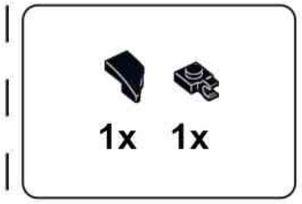

A77

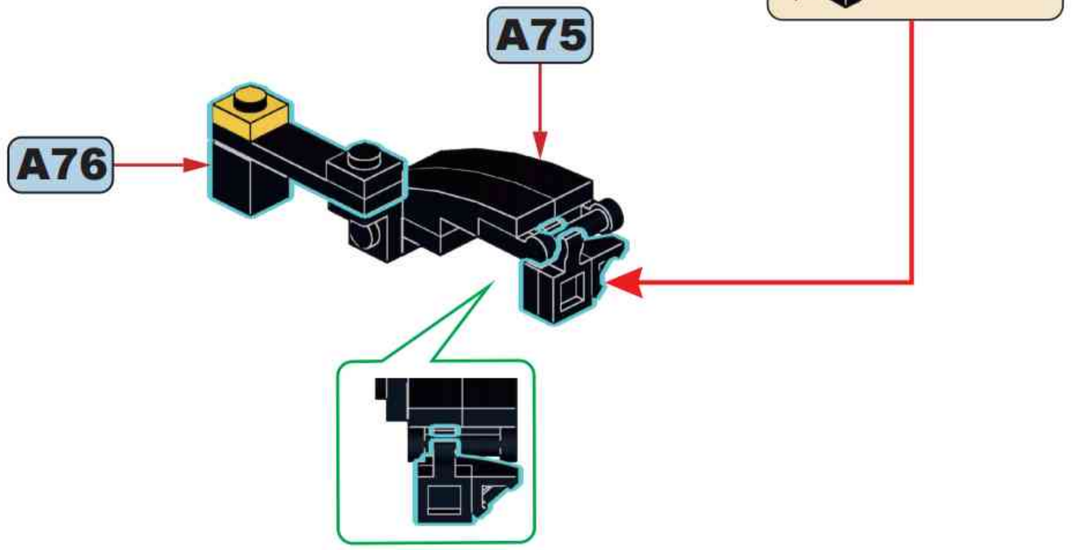

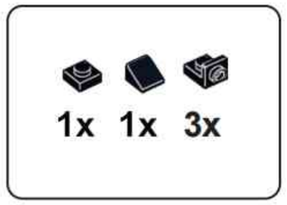

A78

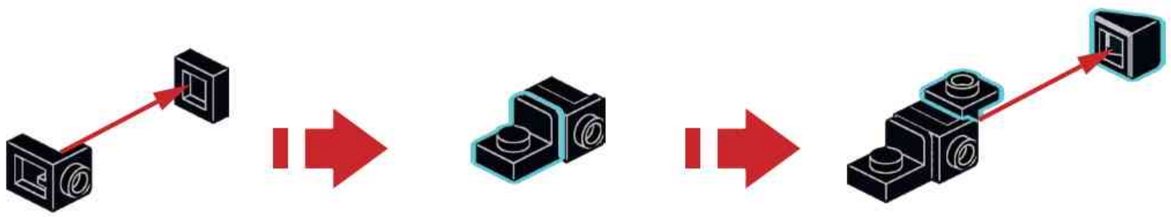

A79

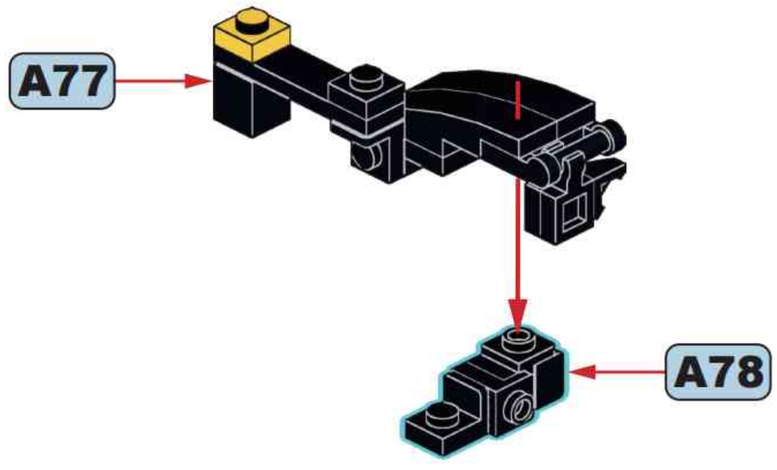

A80

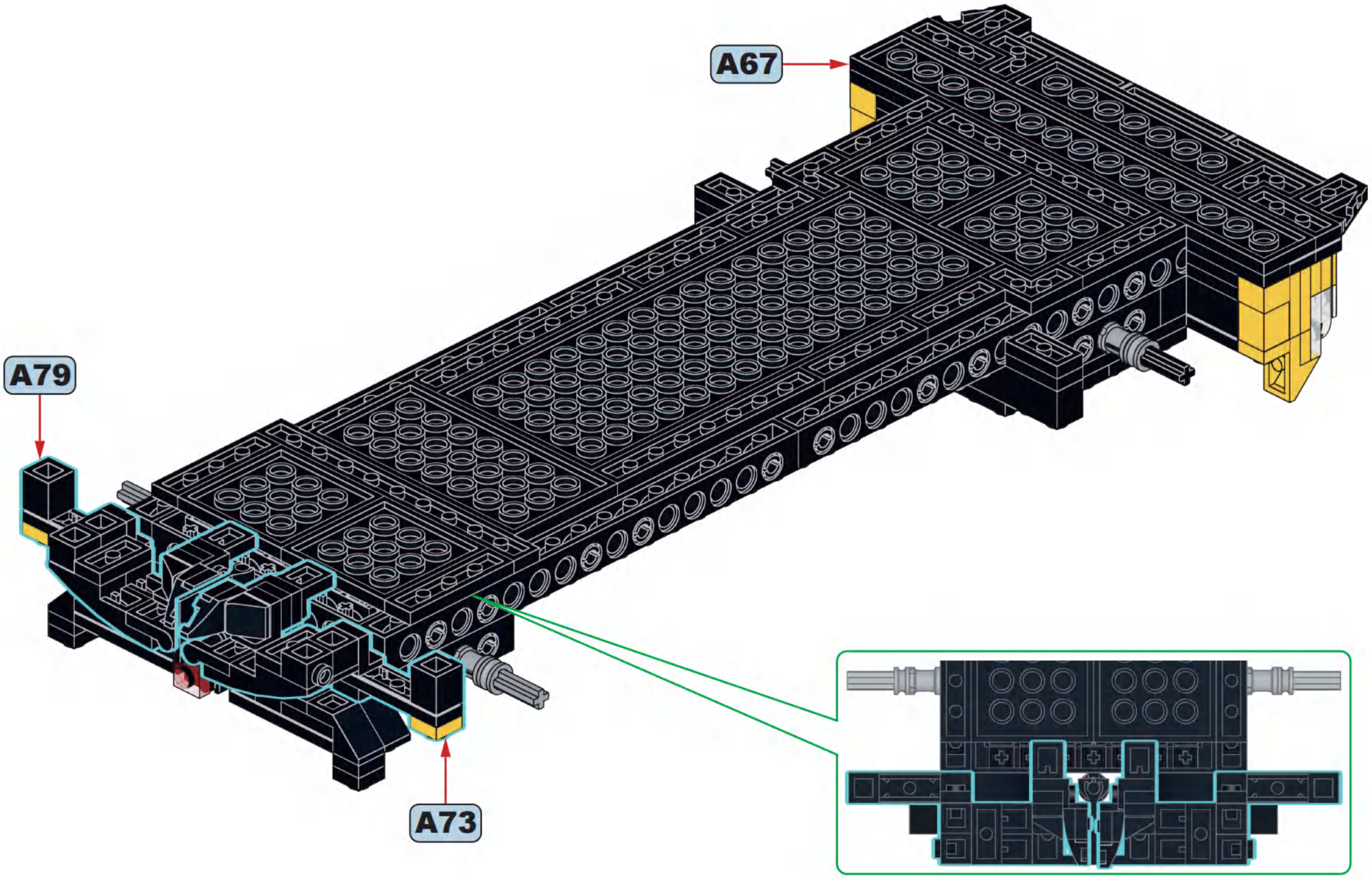

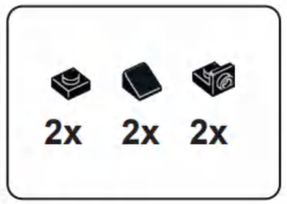

A81

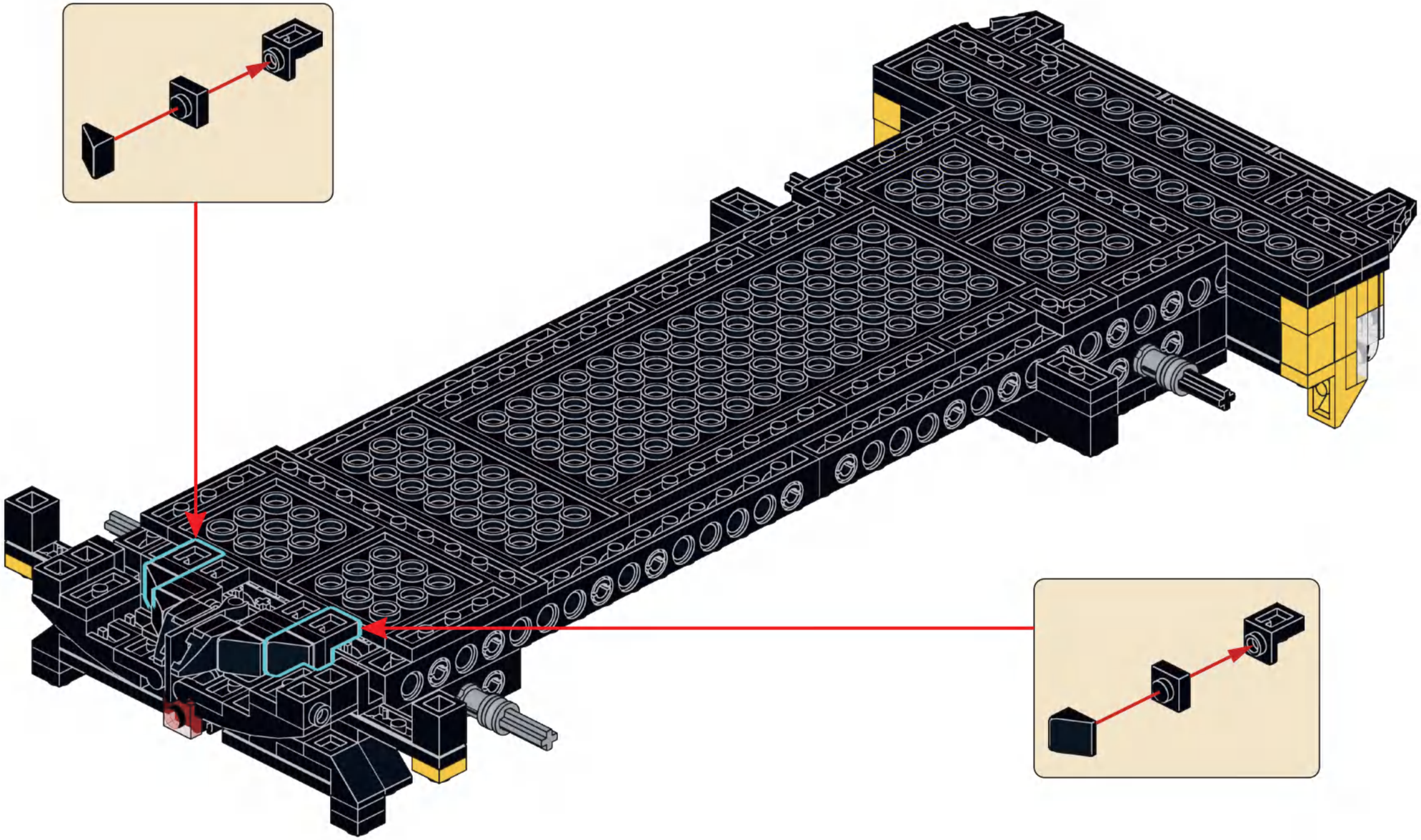

2x 4x 1x

A82

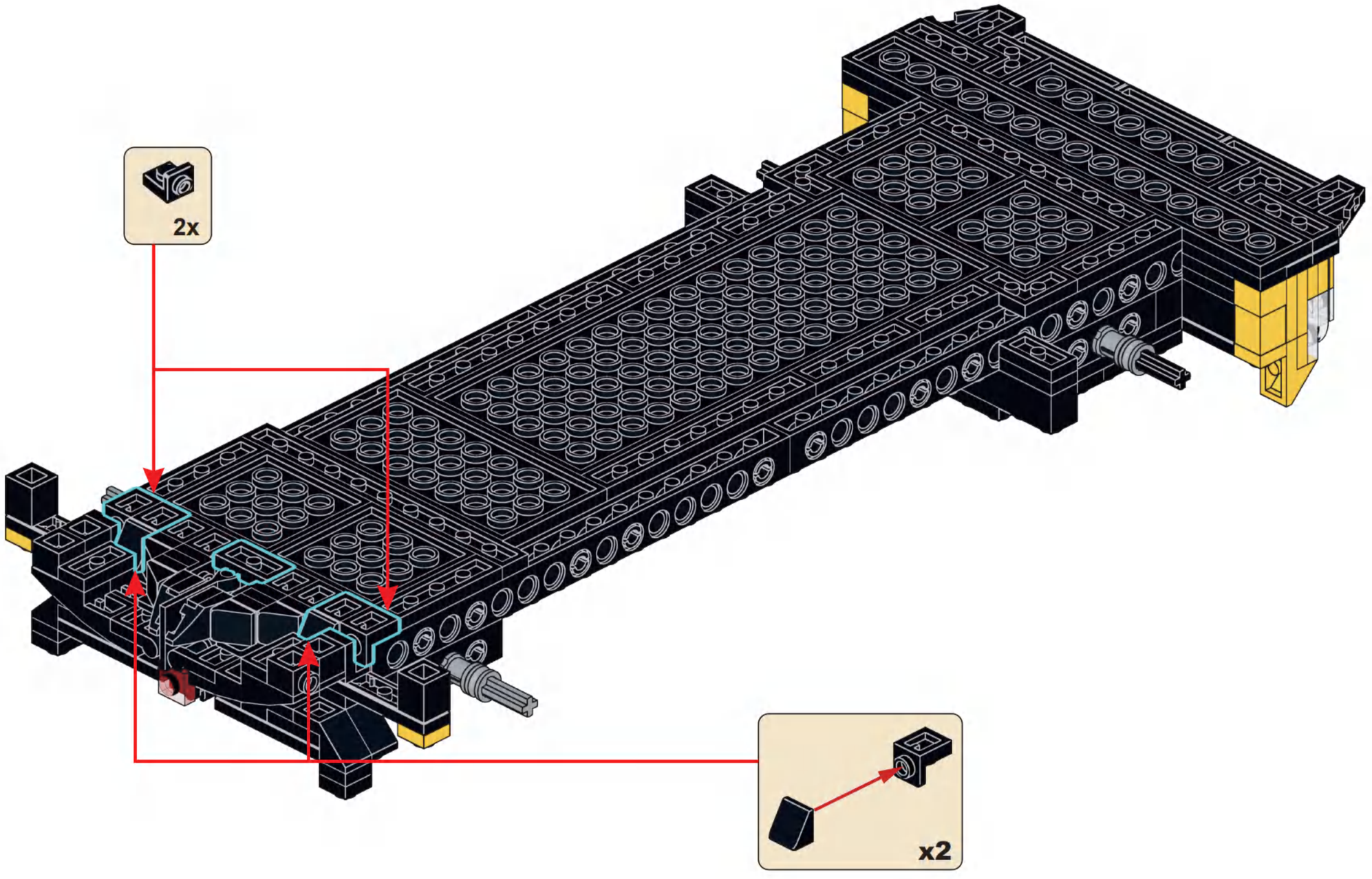

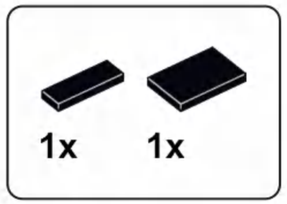

A83

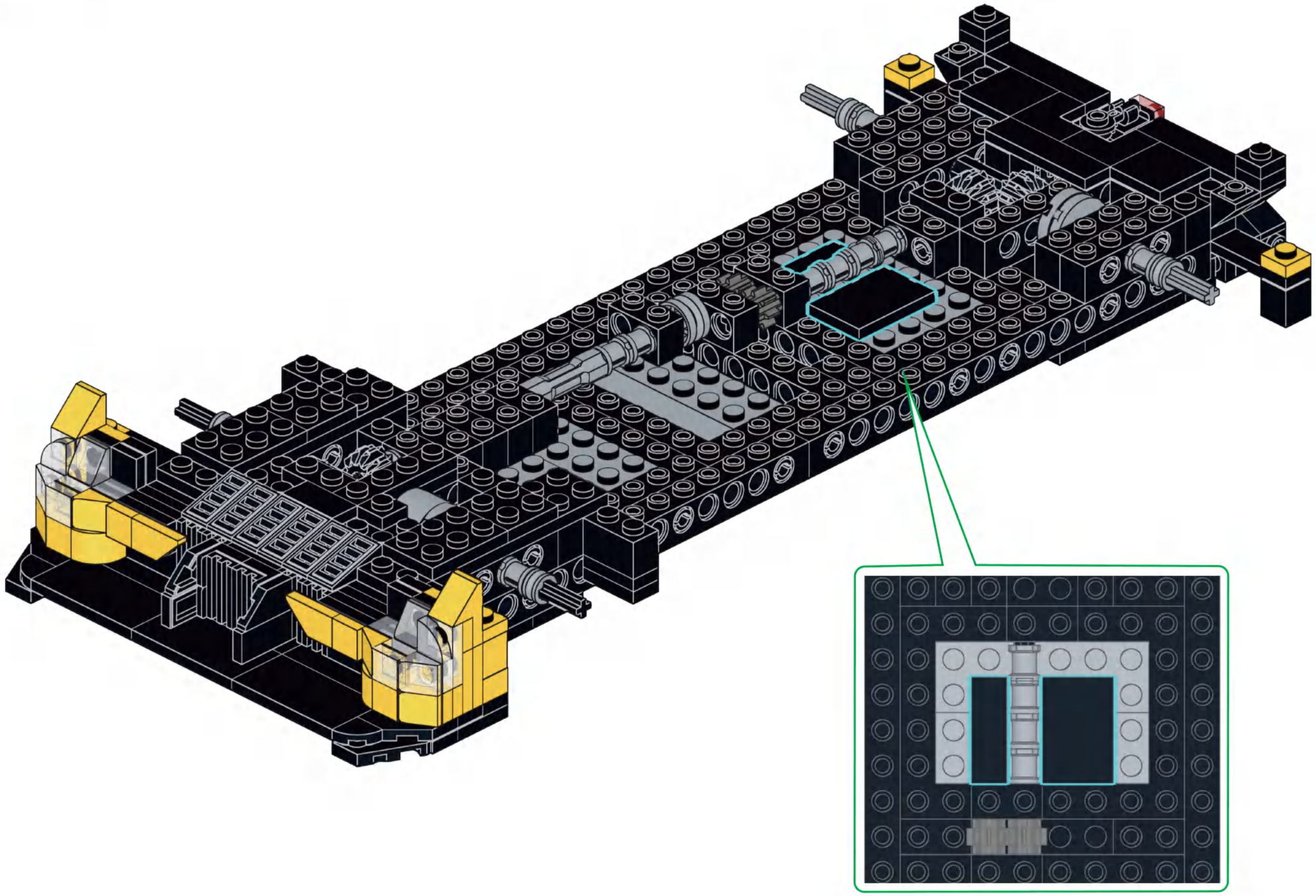

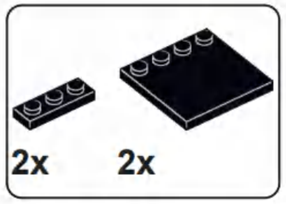

A84

2

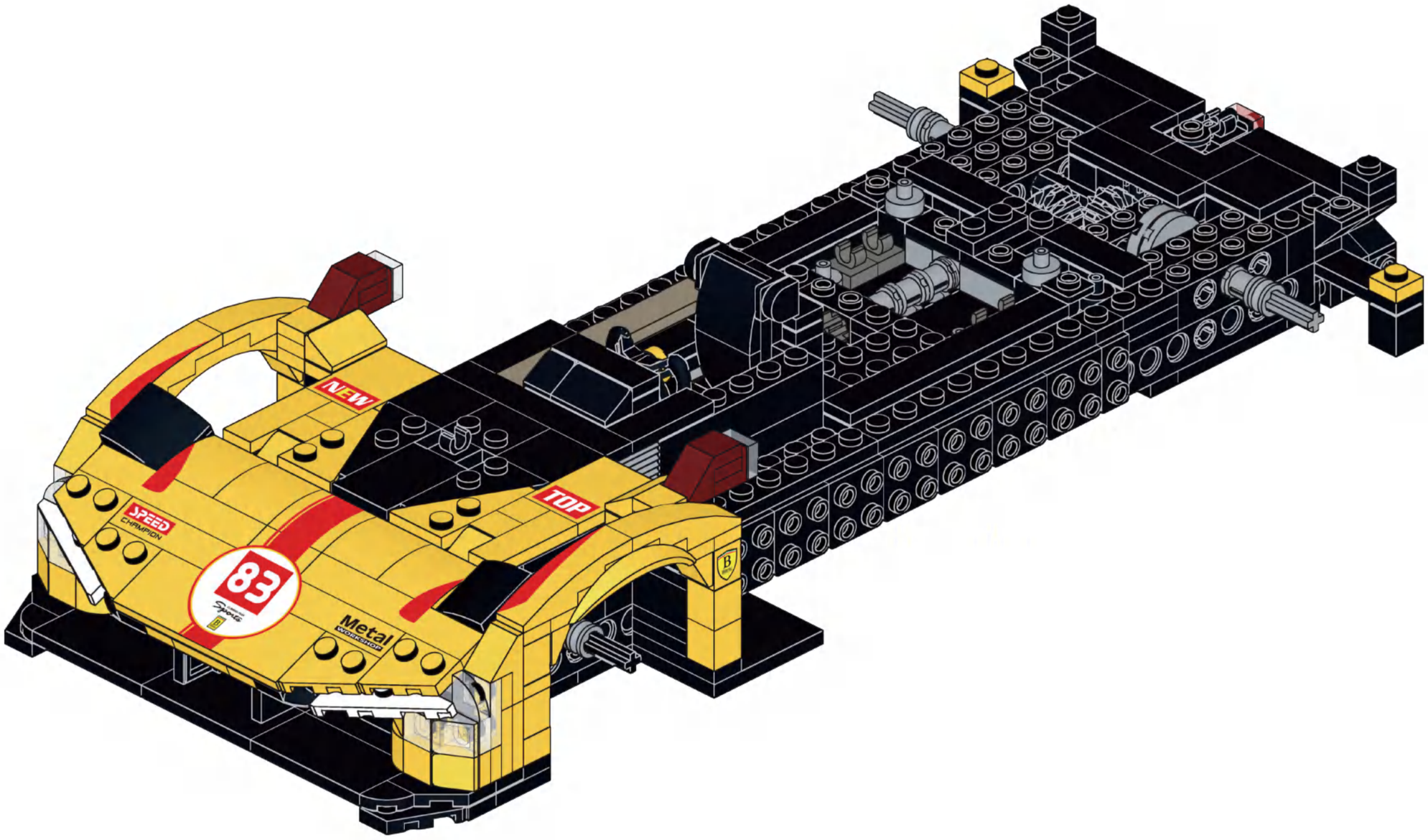

B

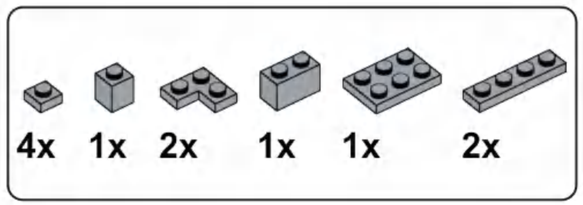

B1

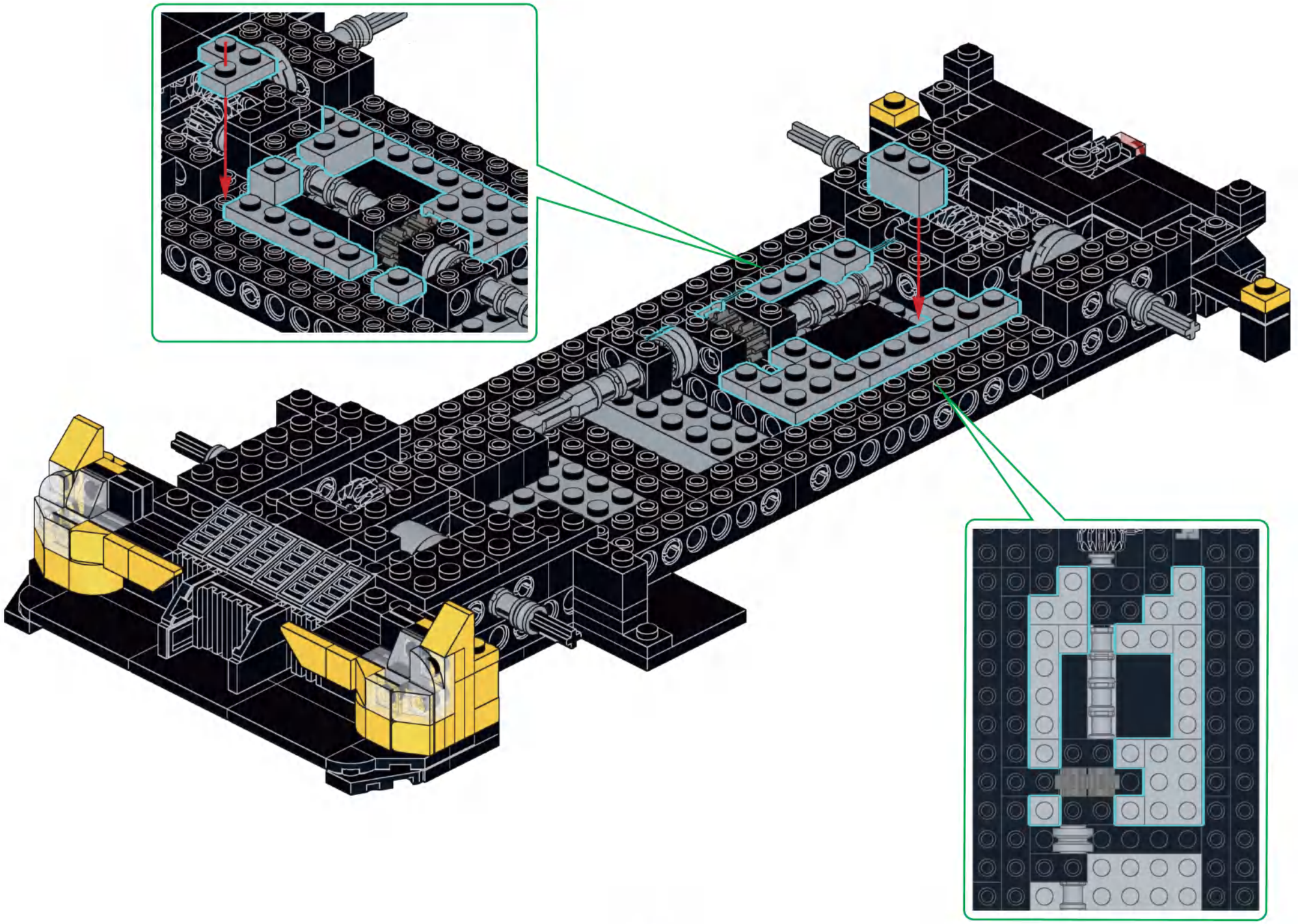

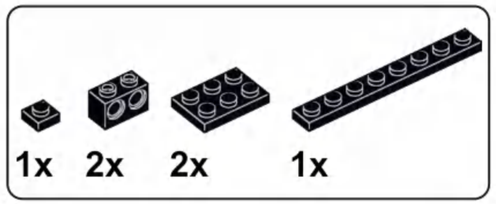

B2

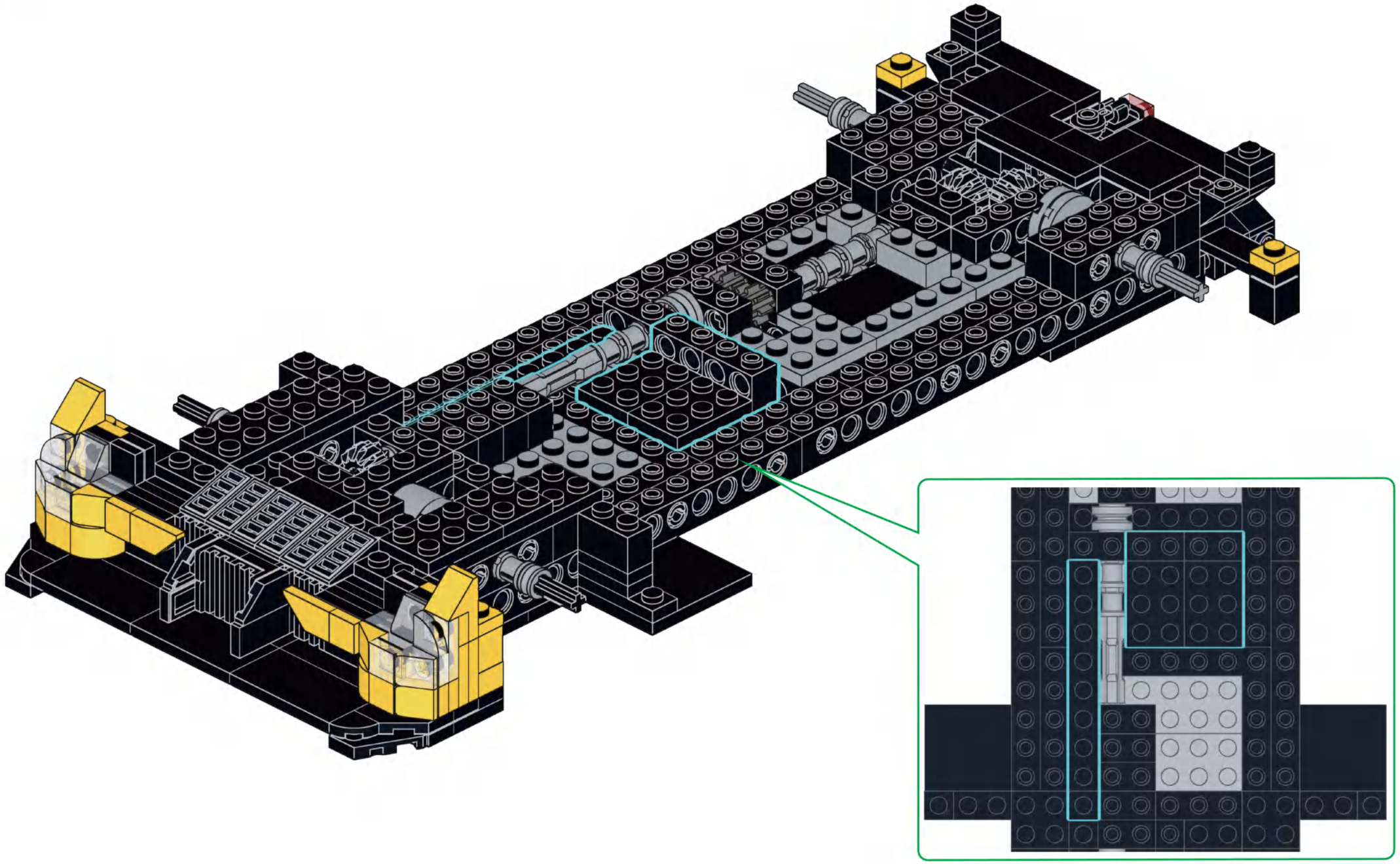

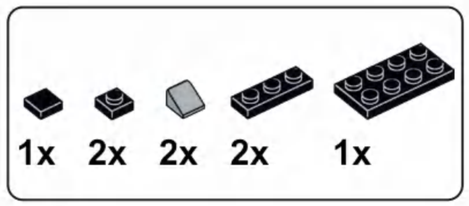

B3

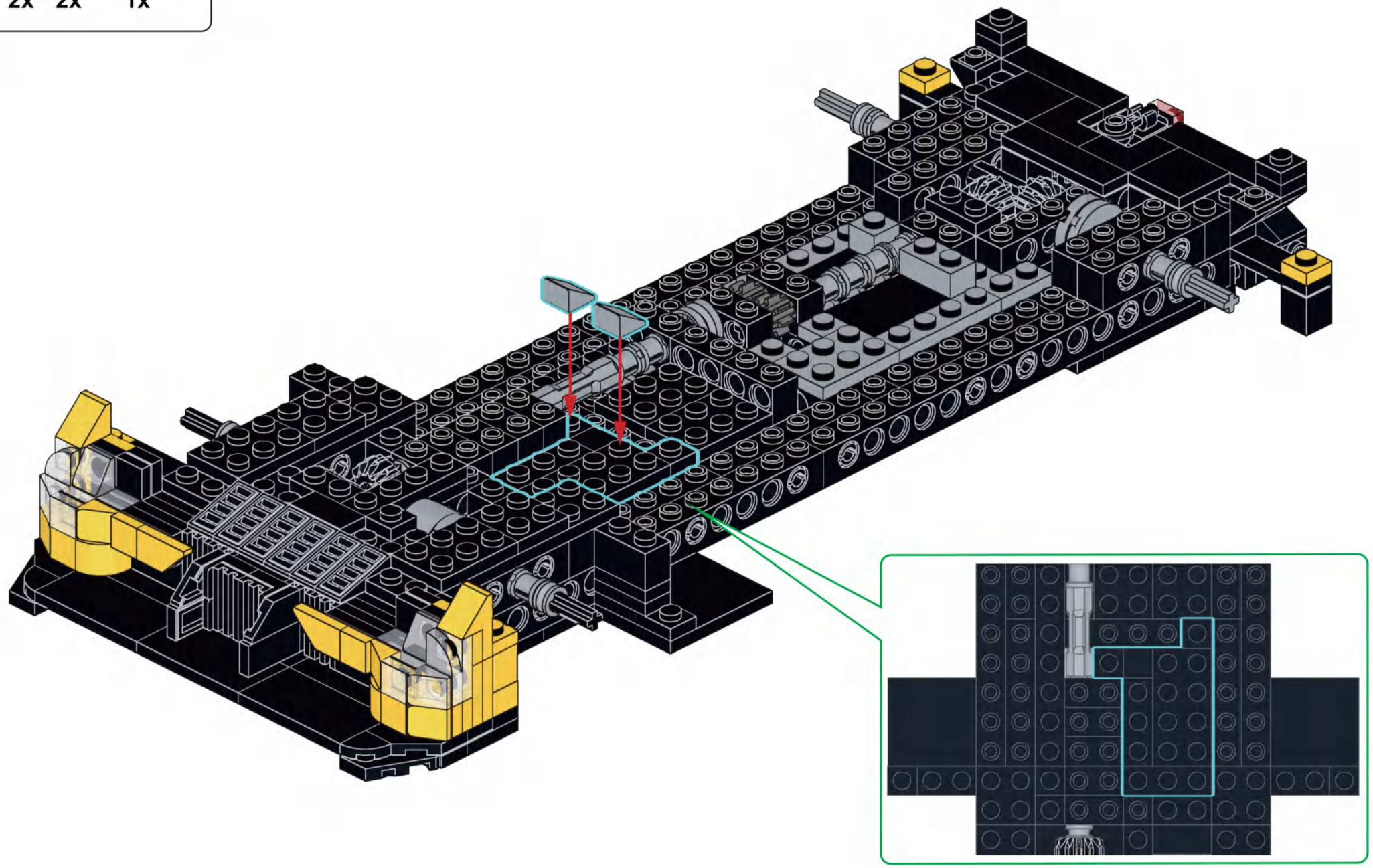

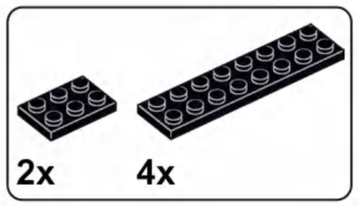

B4

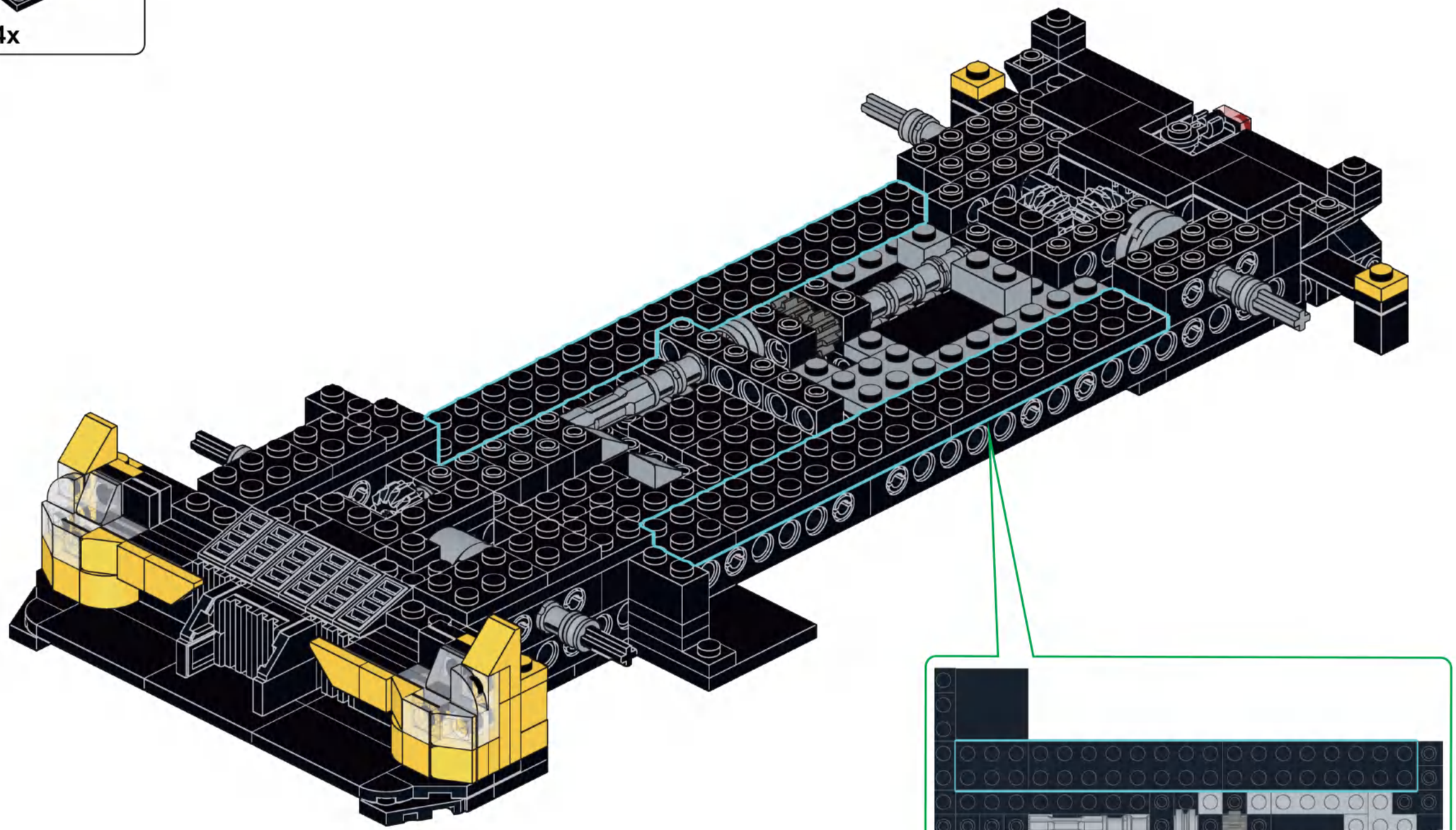

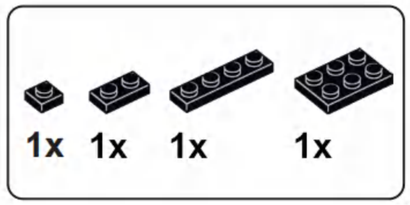

B5

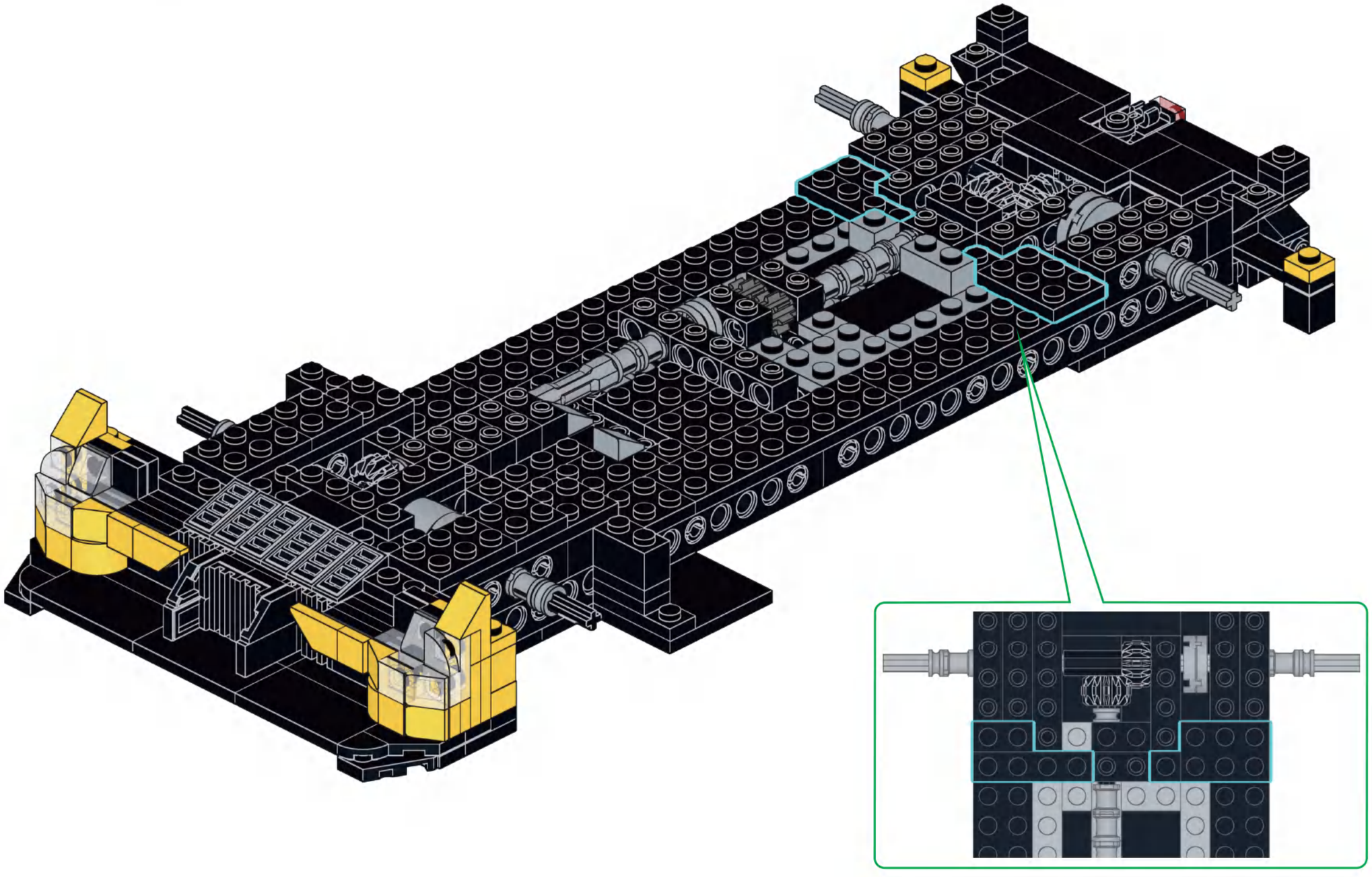

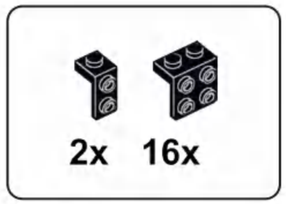

B6

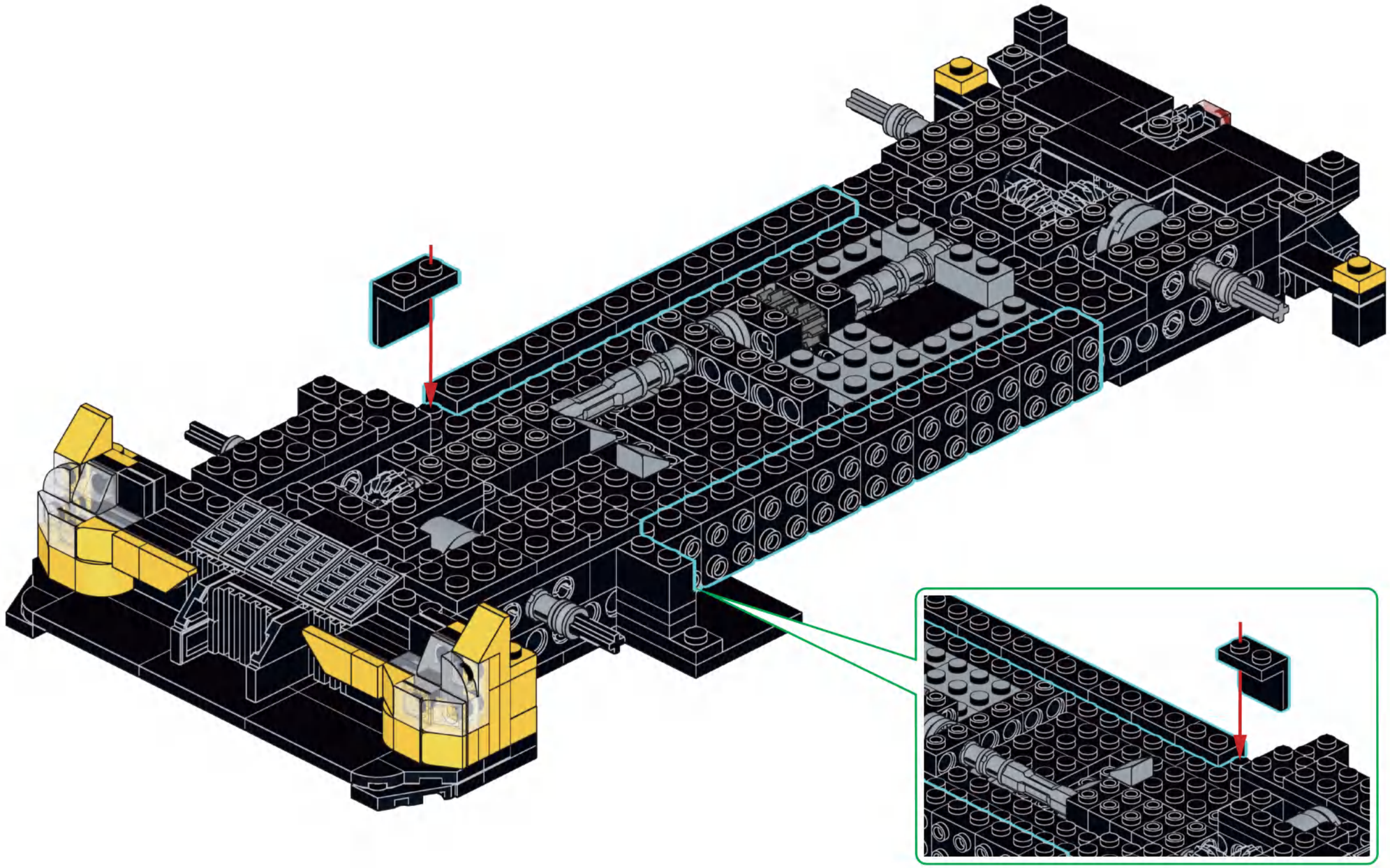

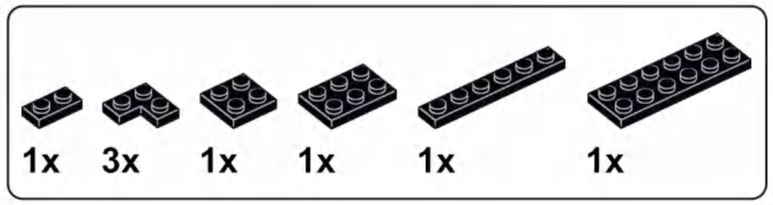

B7

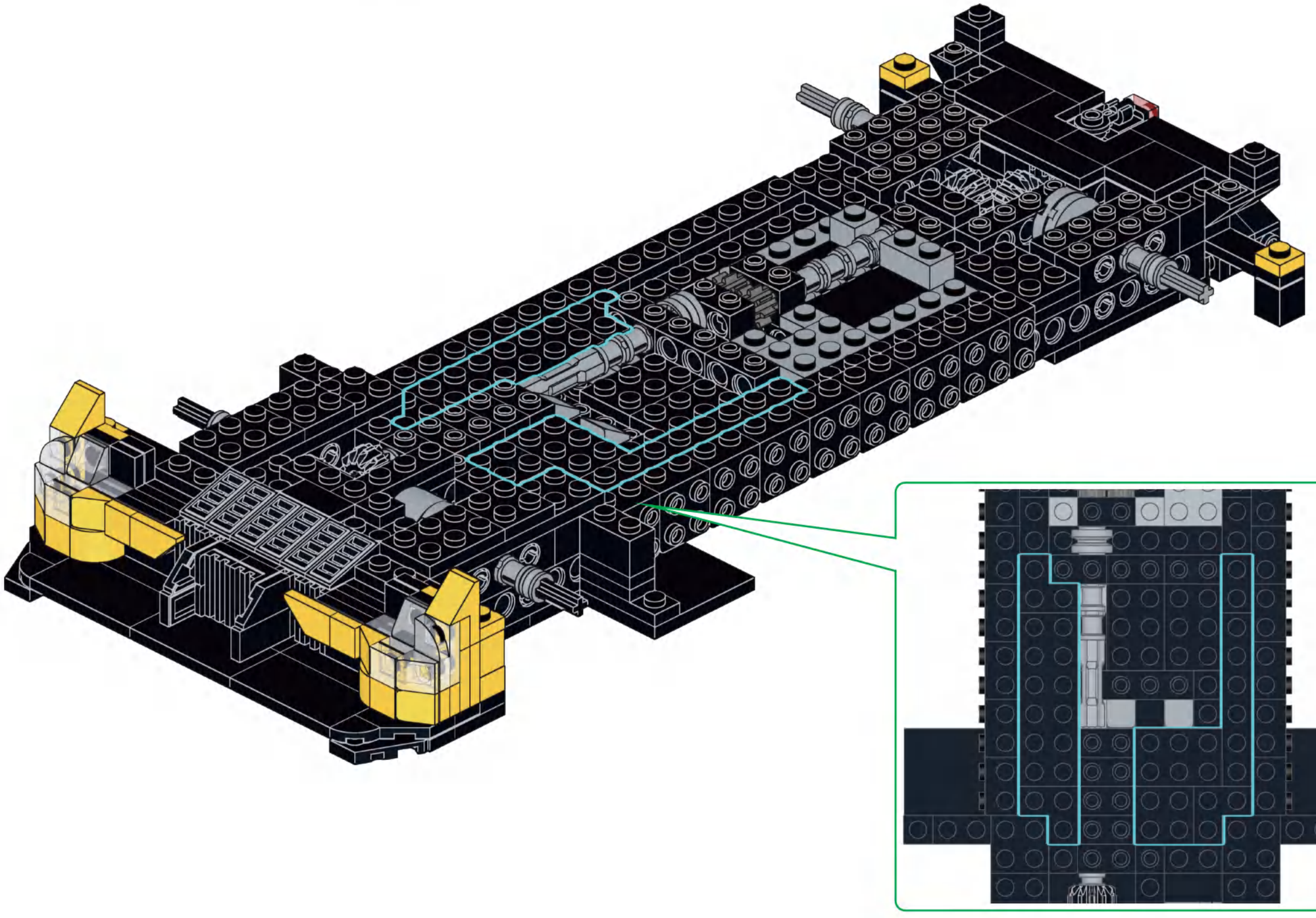

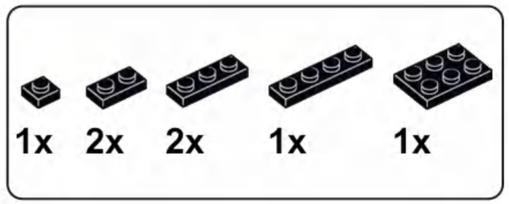

B8

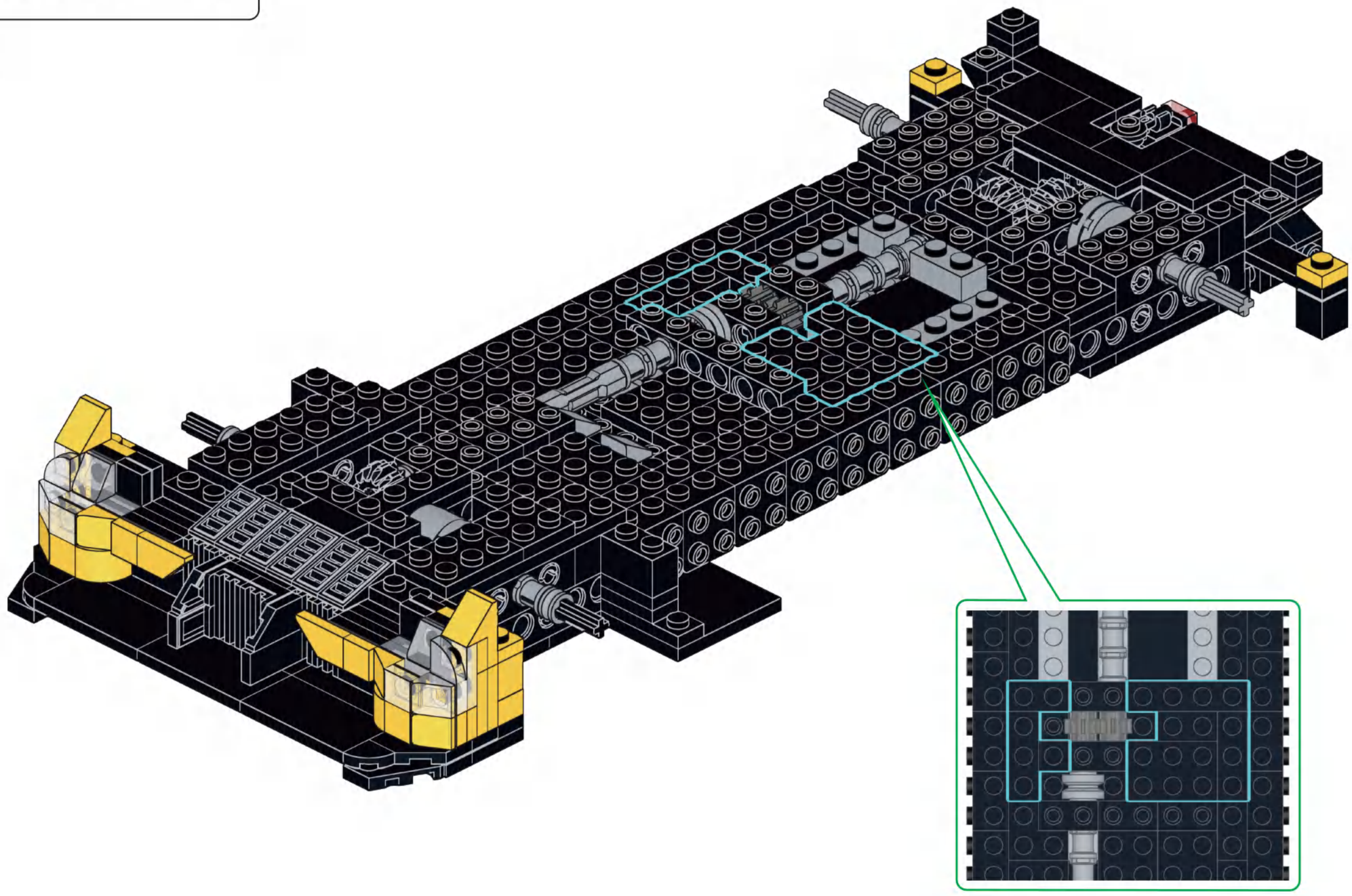

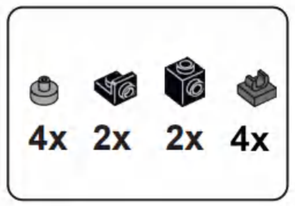

B9

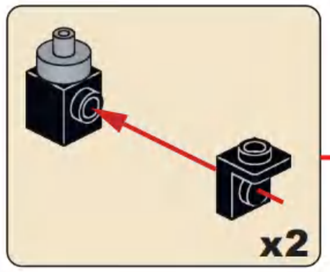

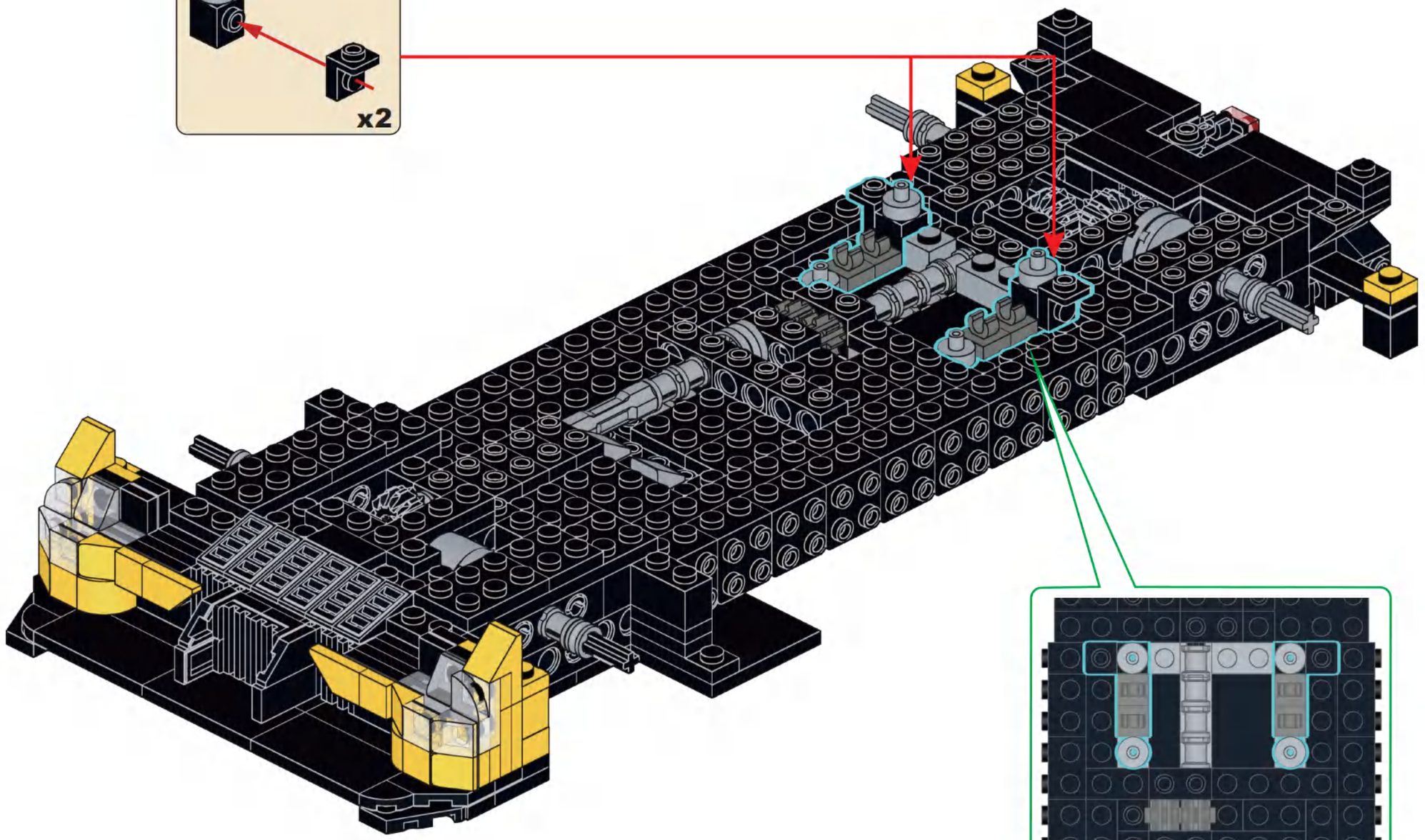

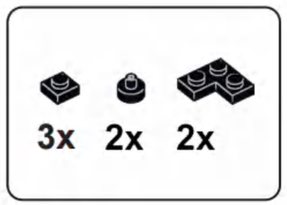

B10

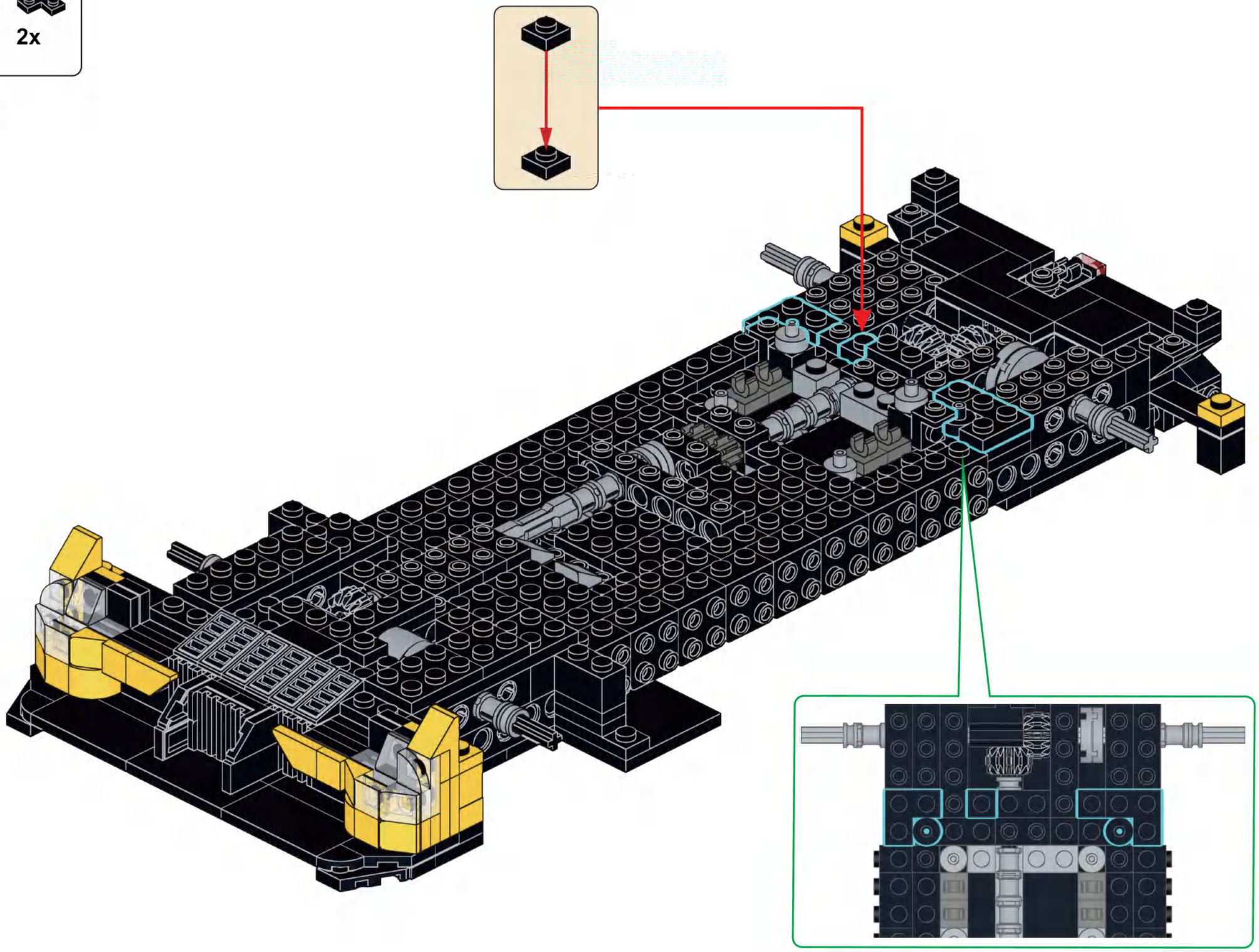

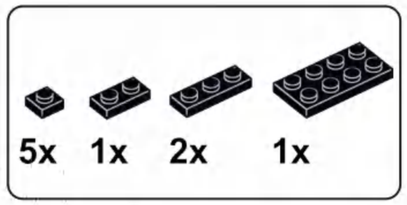

B11

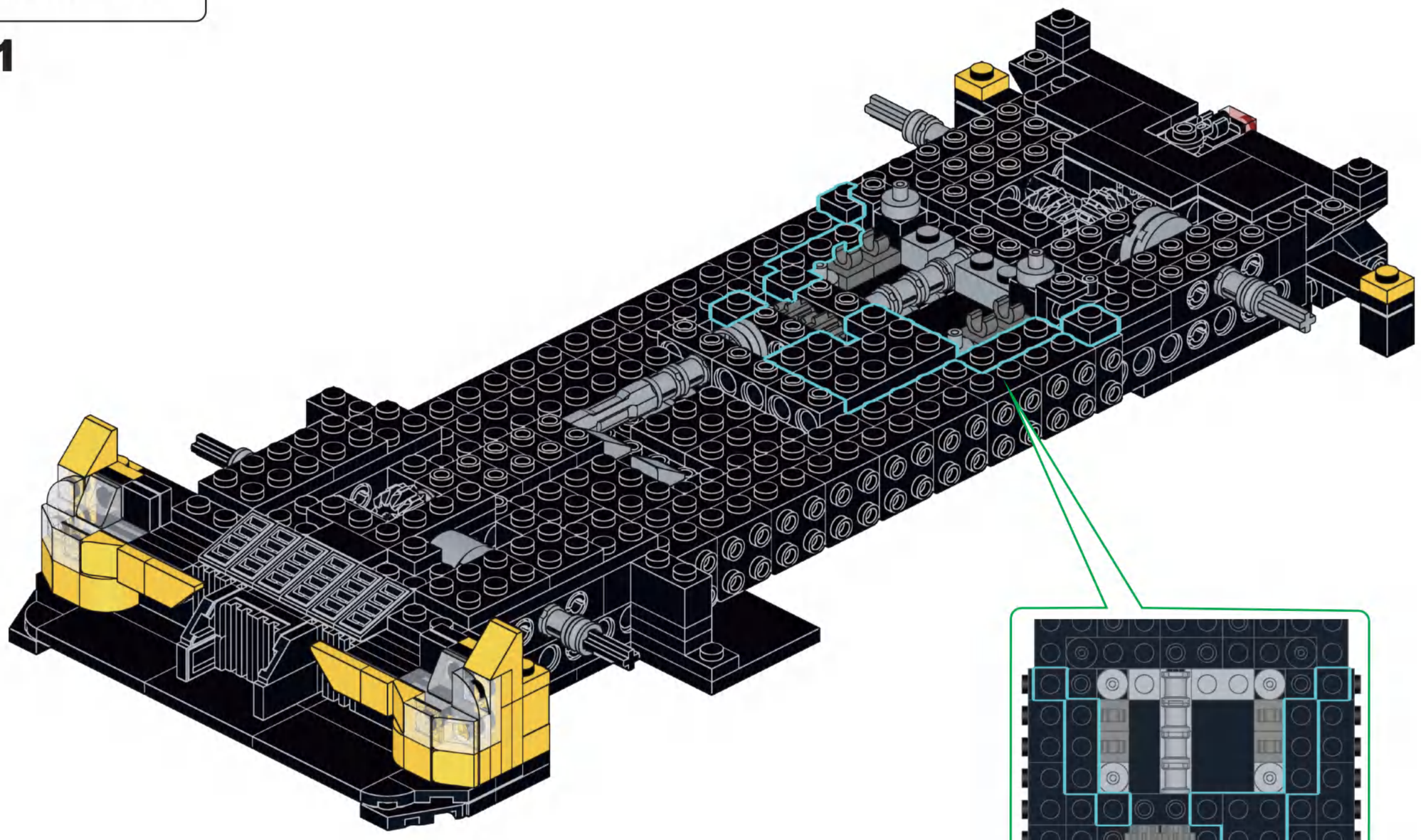

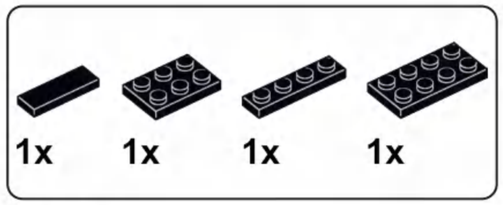

B12

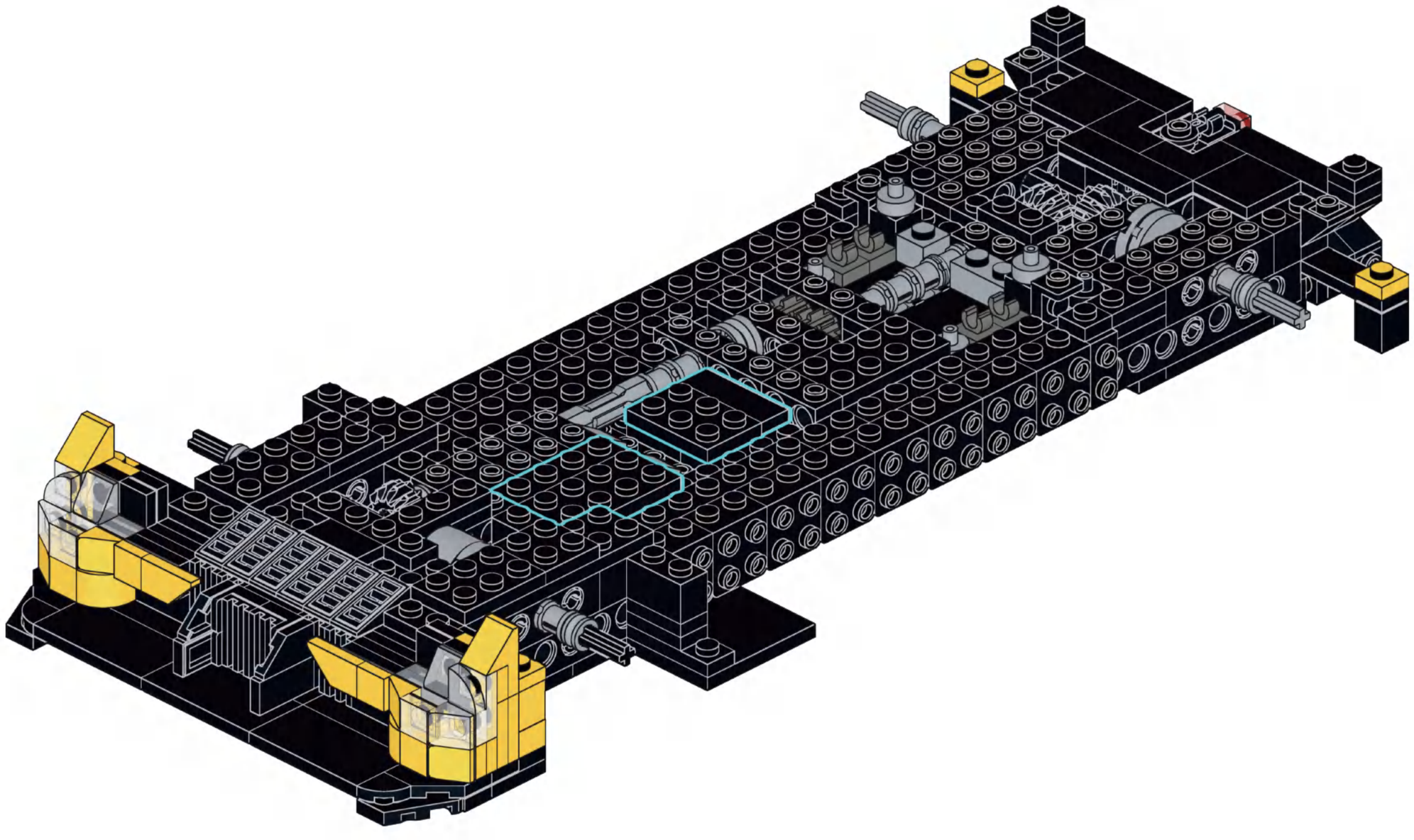

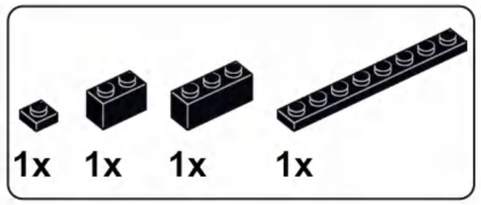

B13

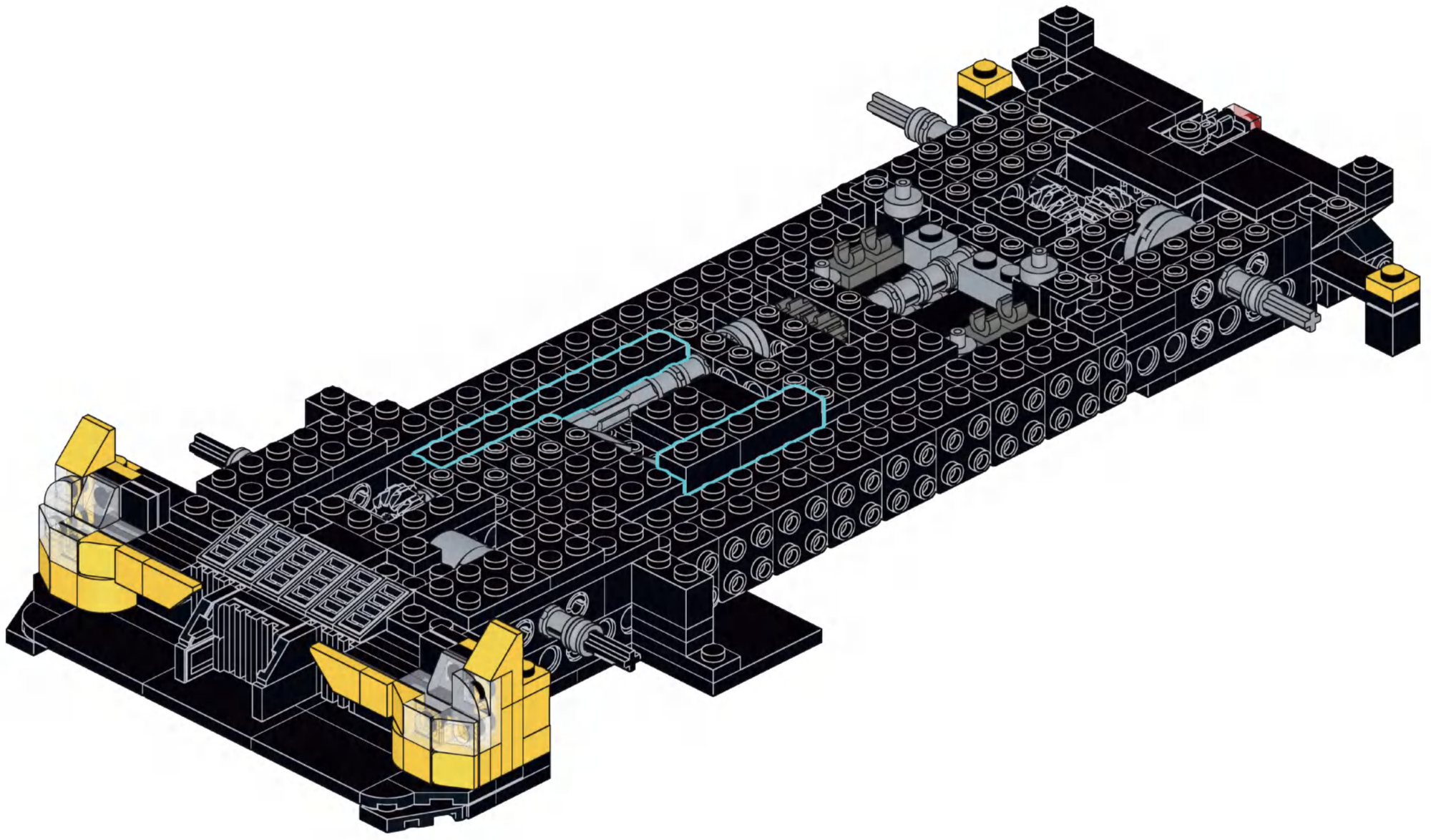

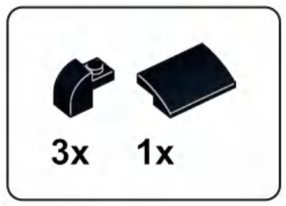

B14

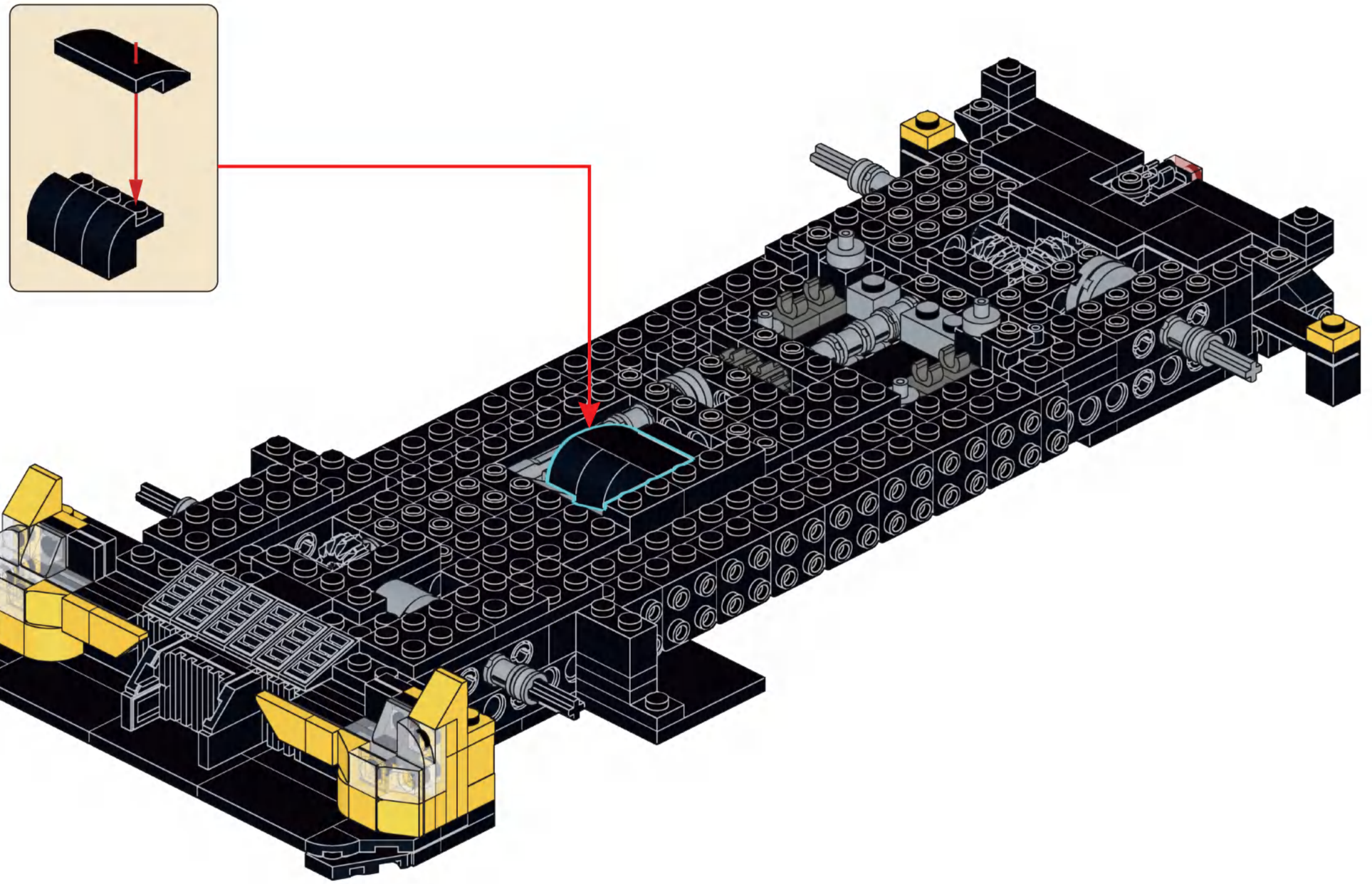

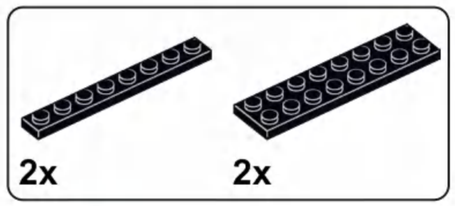

B15

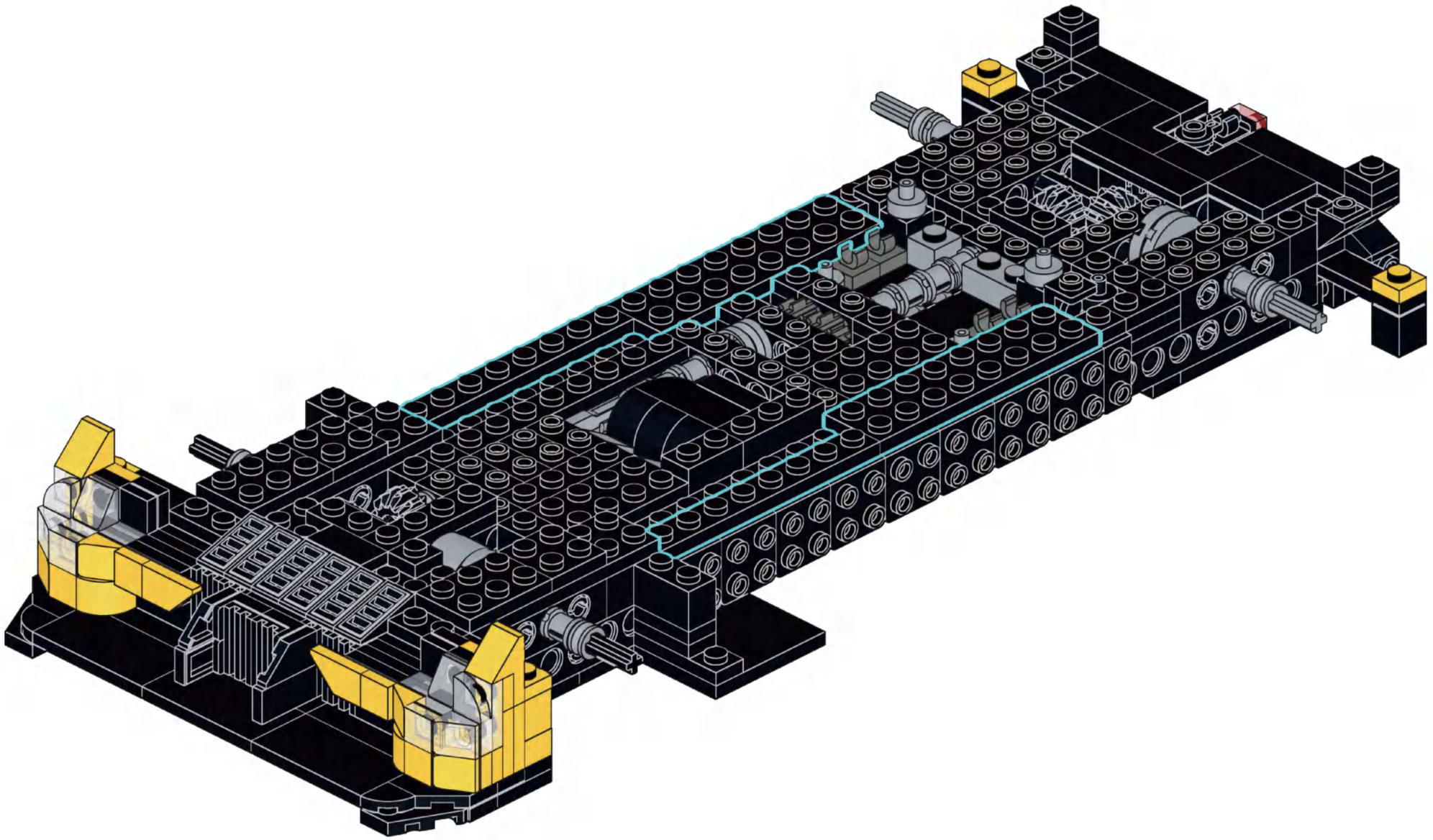

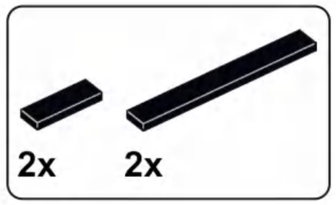

B16

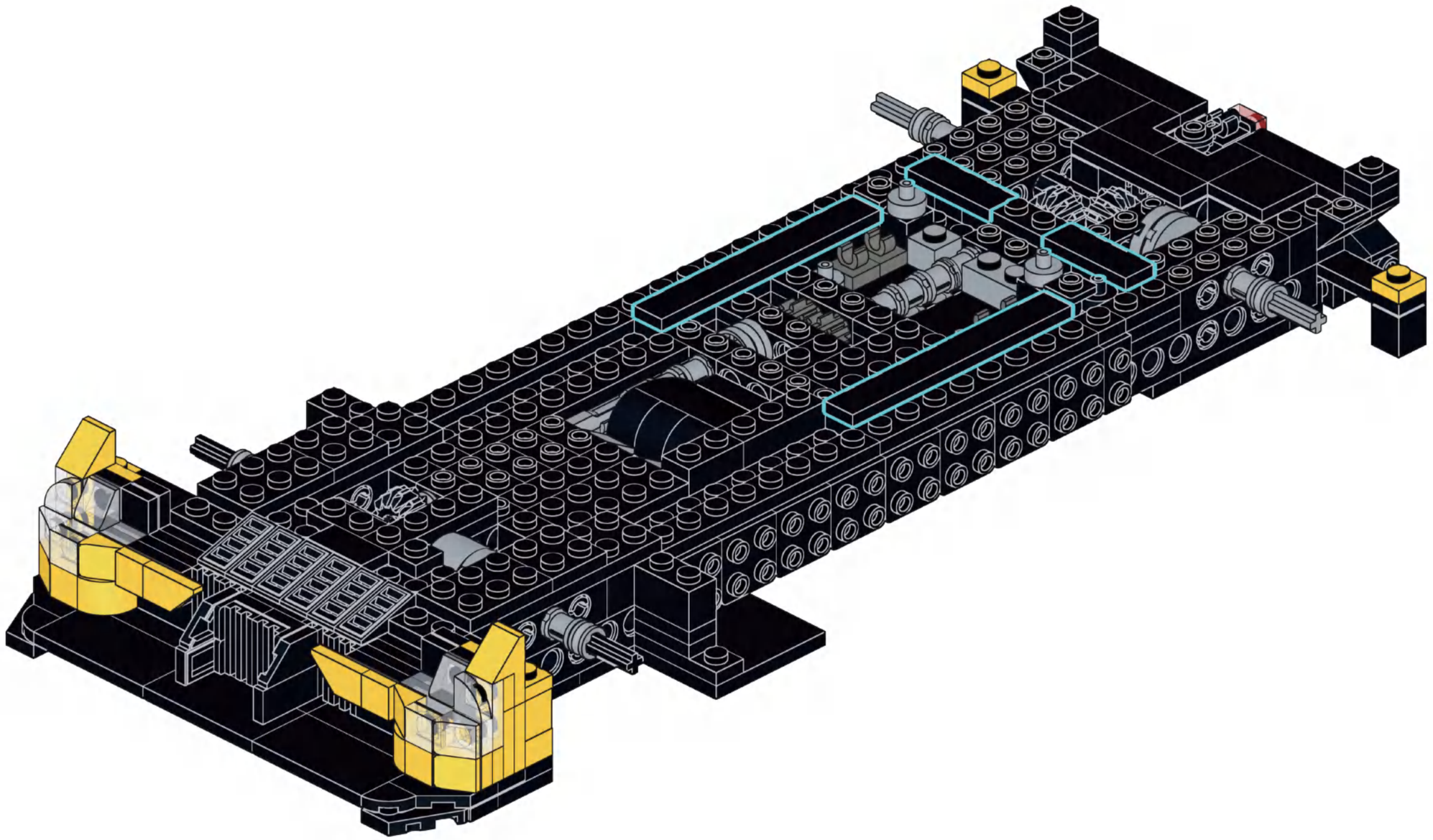

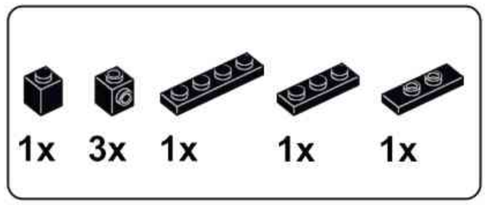

B17

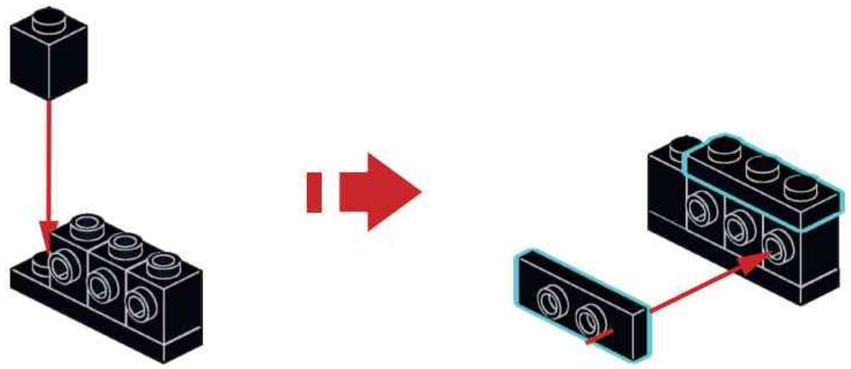

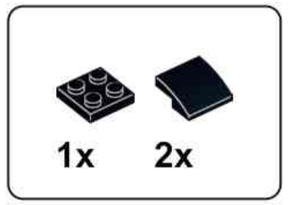

B18

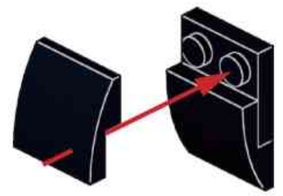

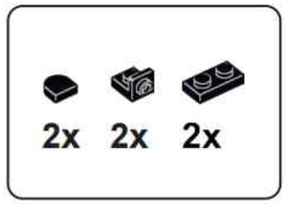

B19

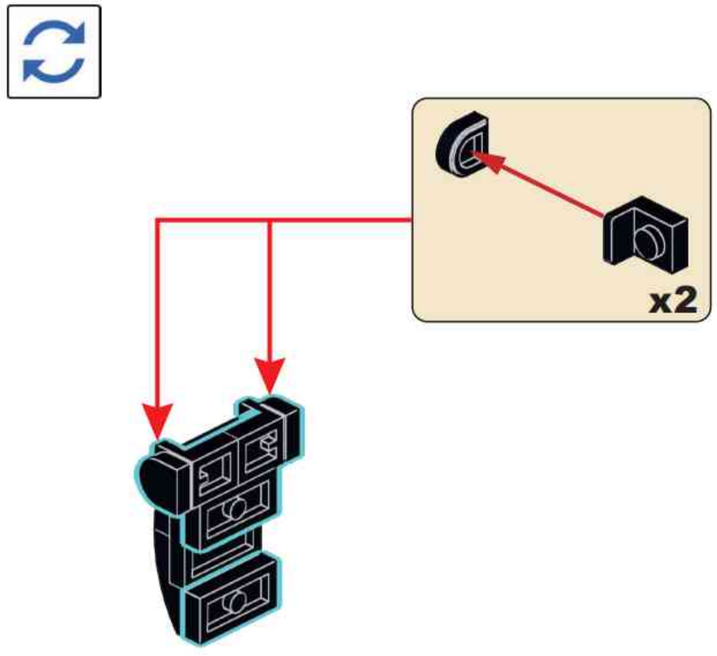

B20

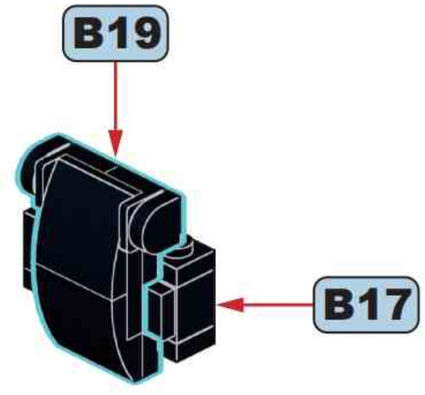

2x

B21

x2

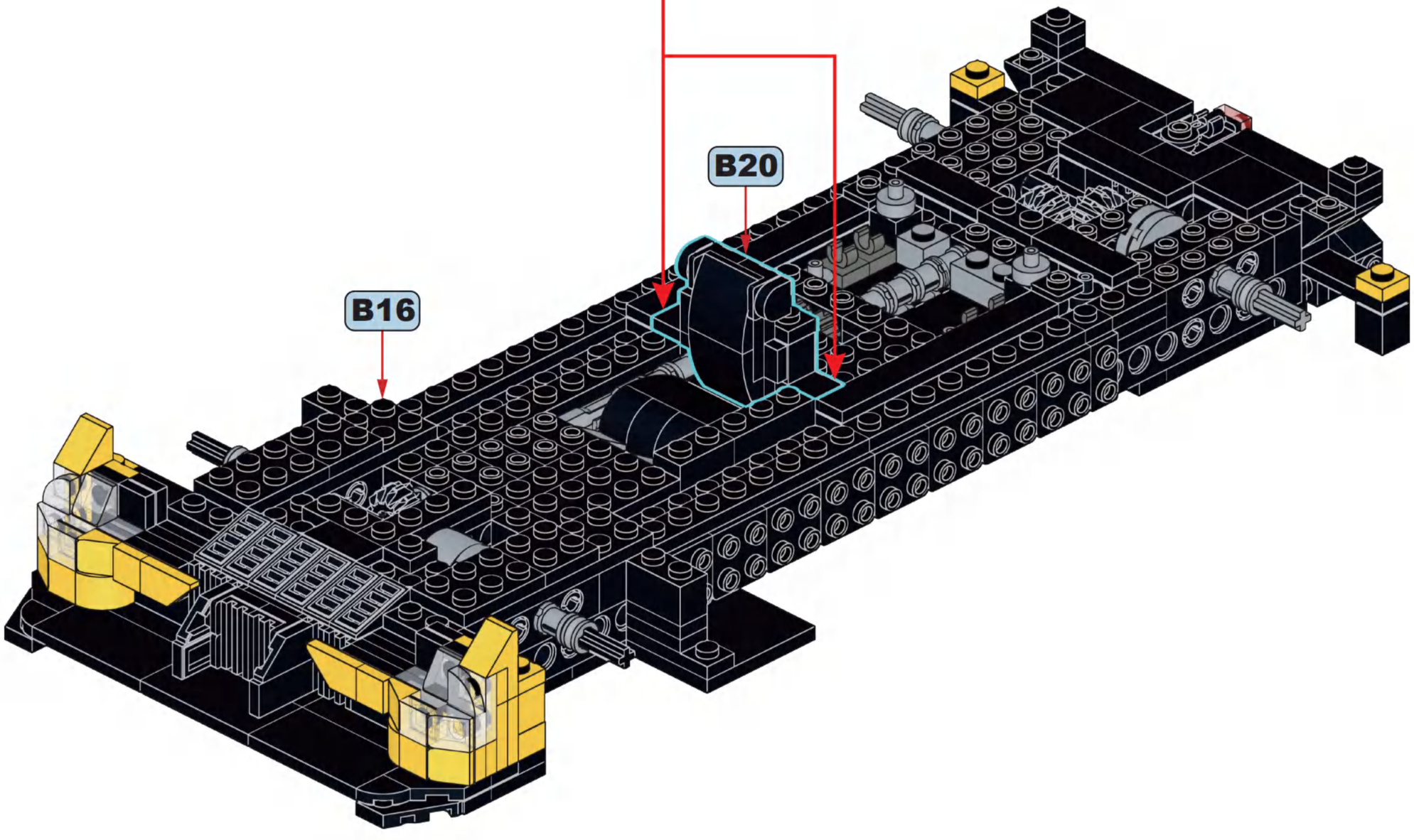

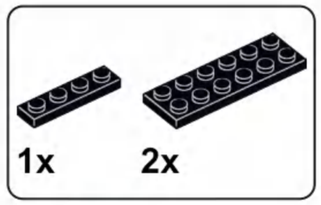

B22

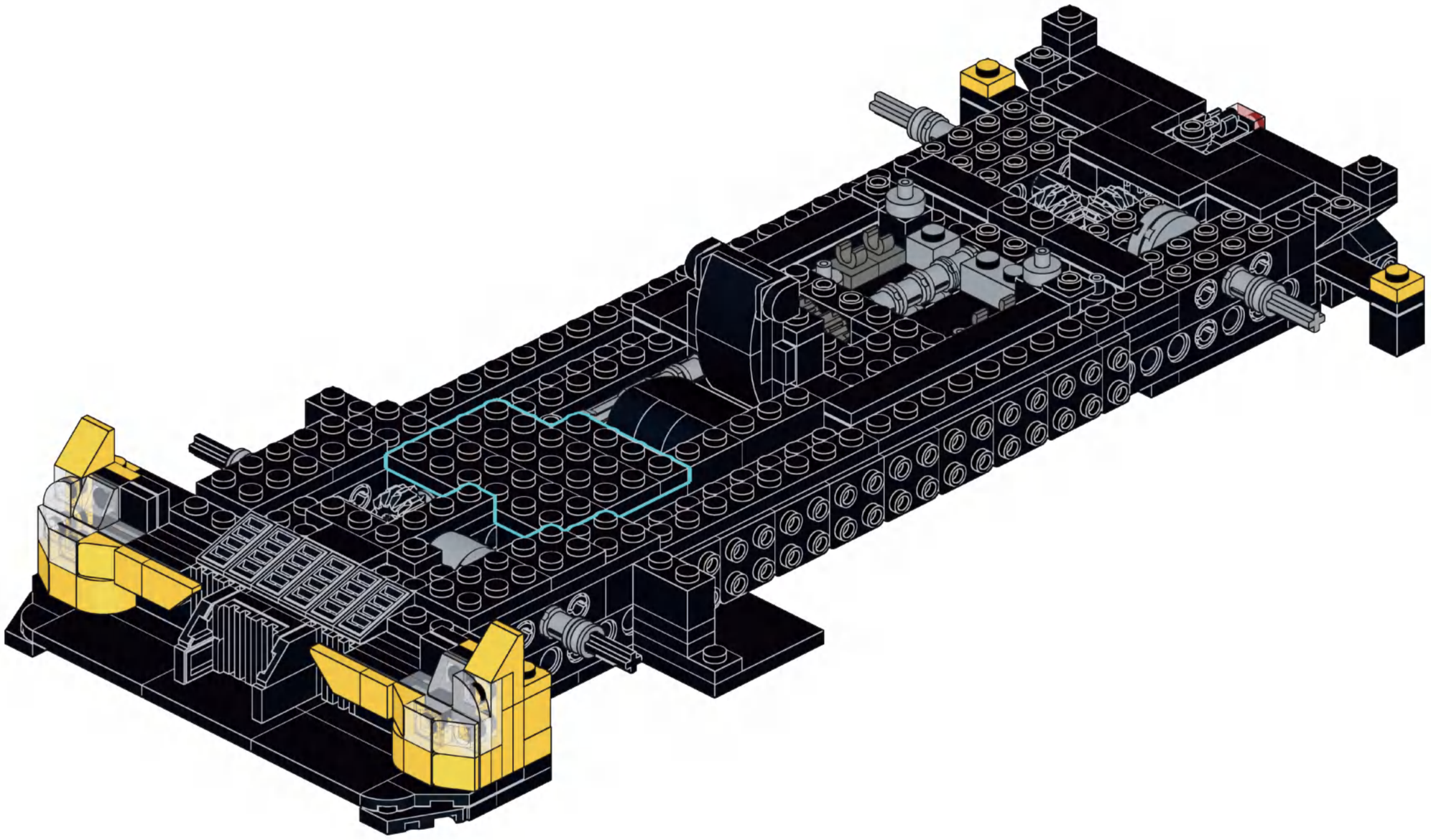

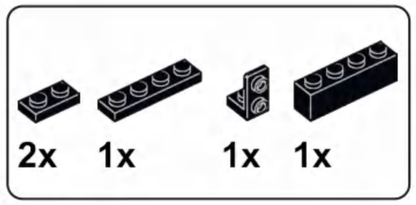

B23

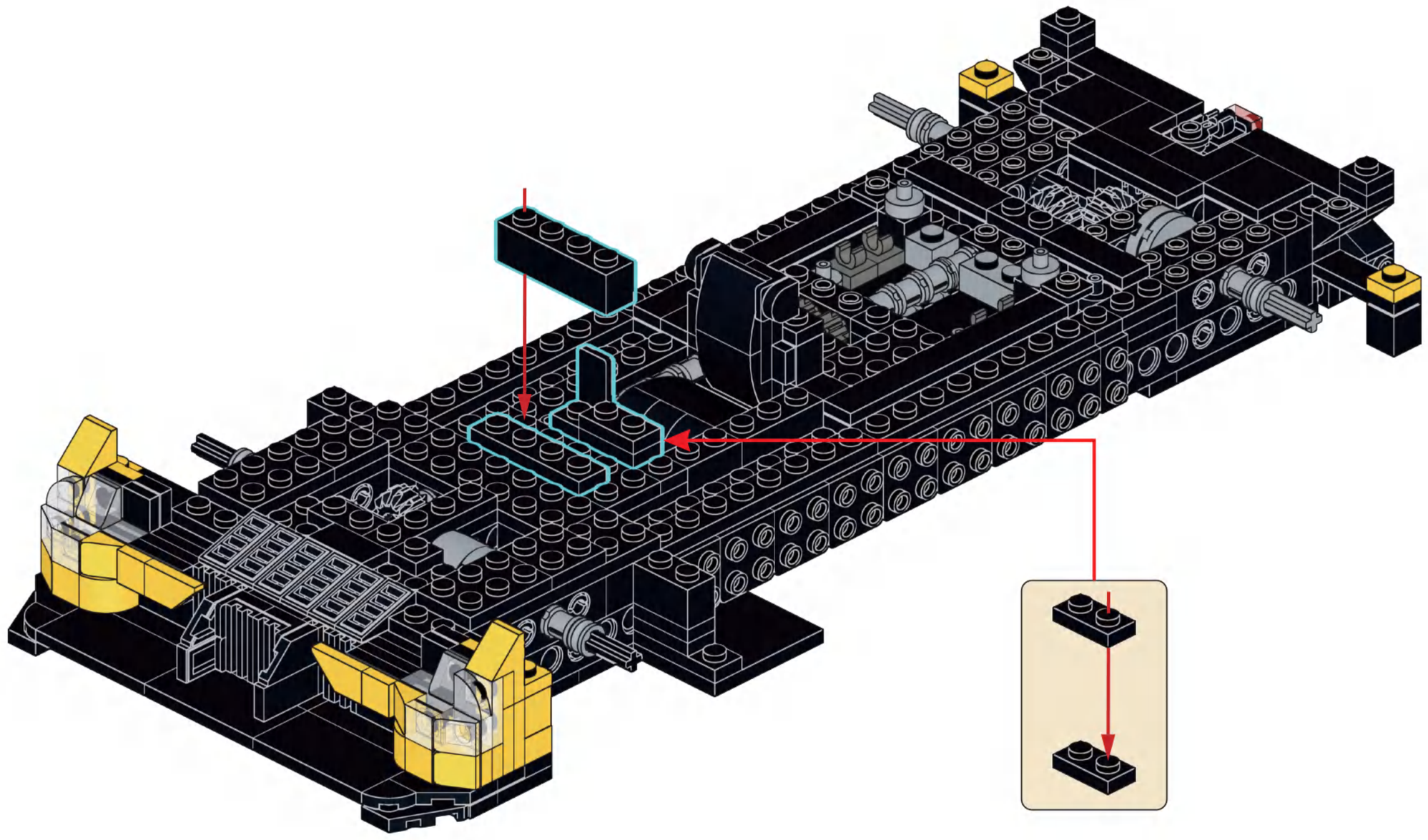

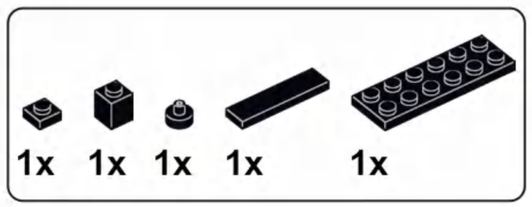

B24

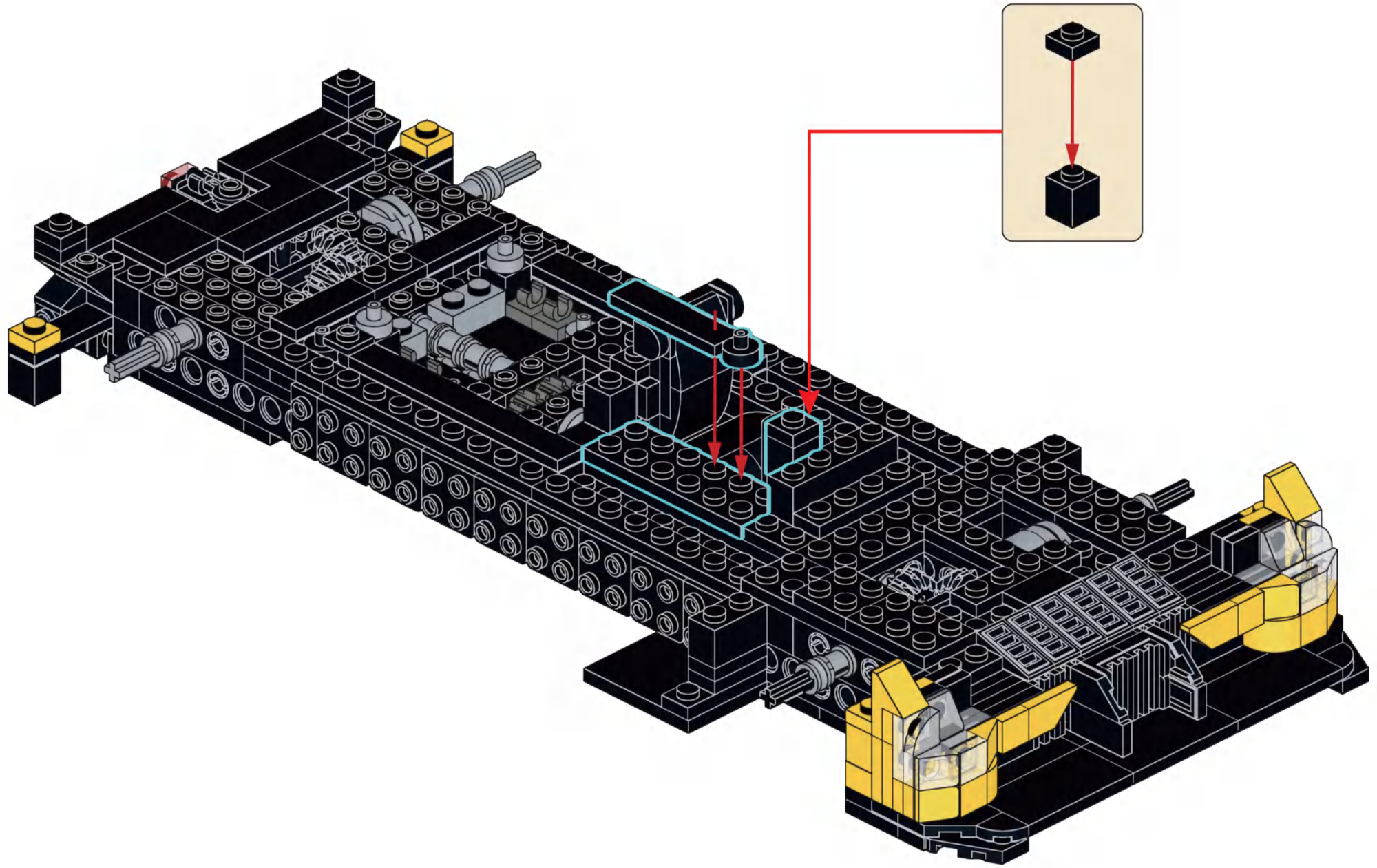

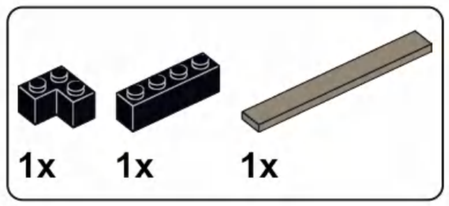

B25

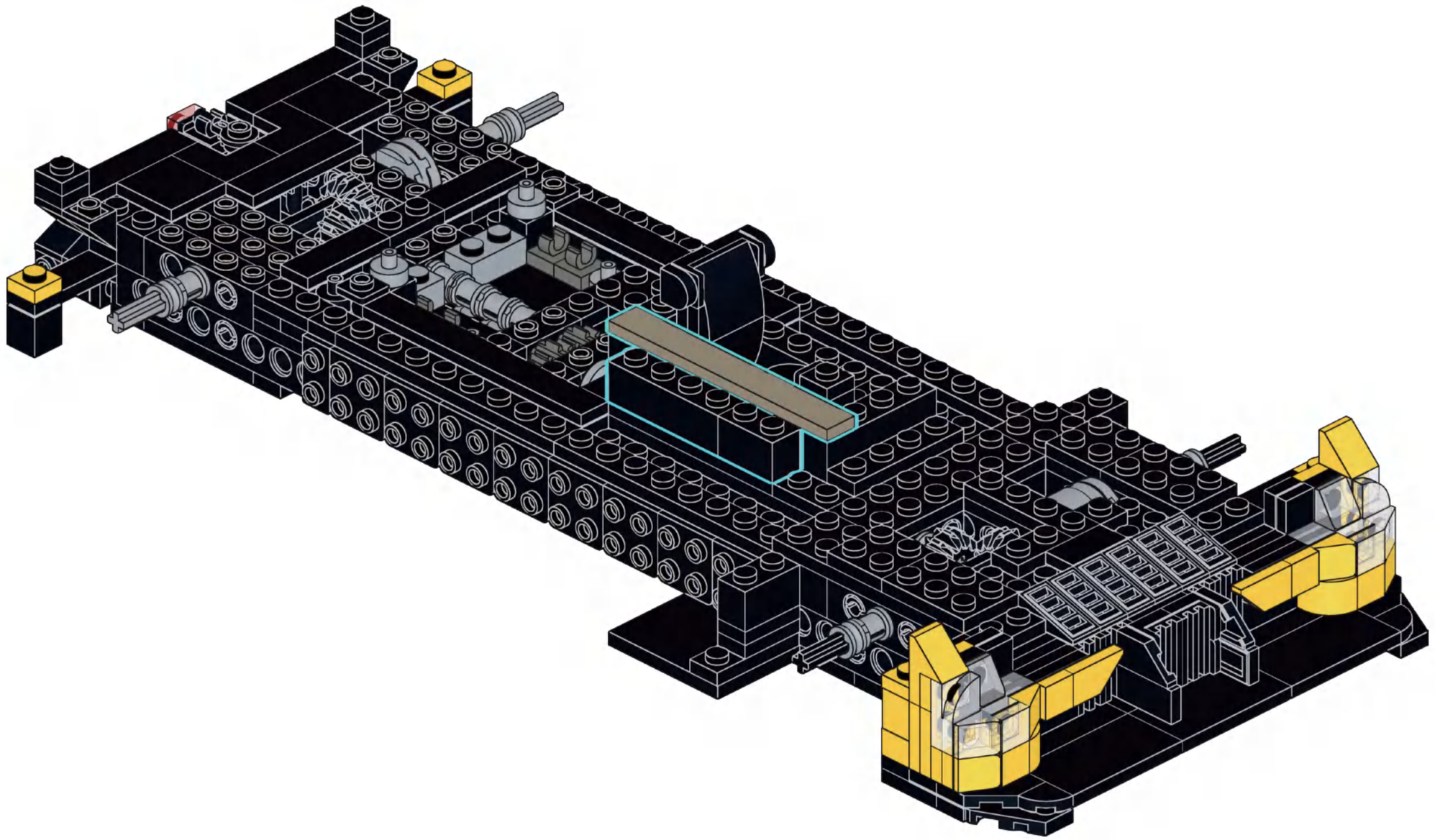

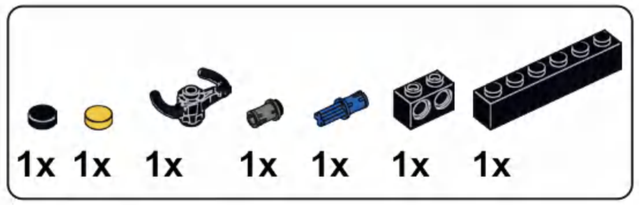

B26

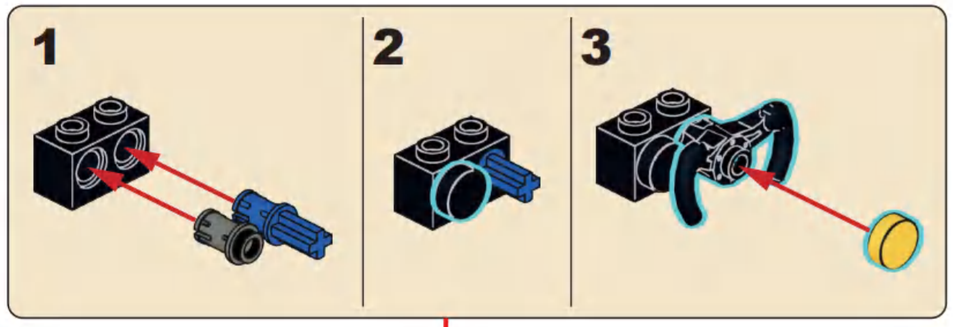

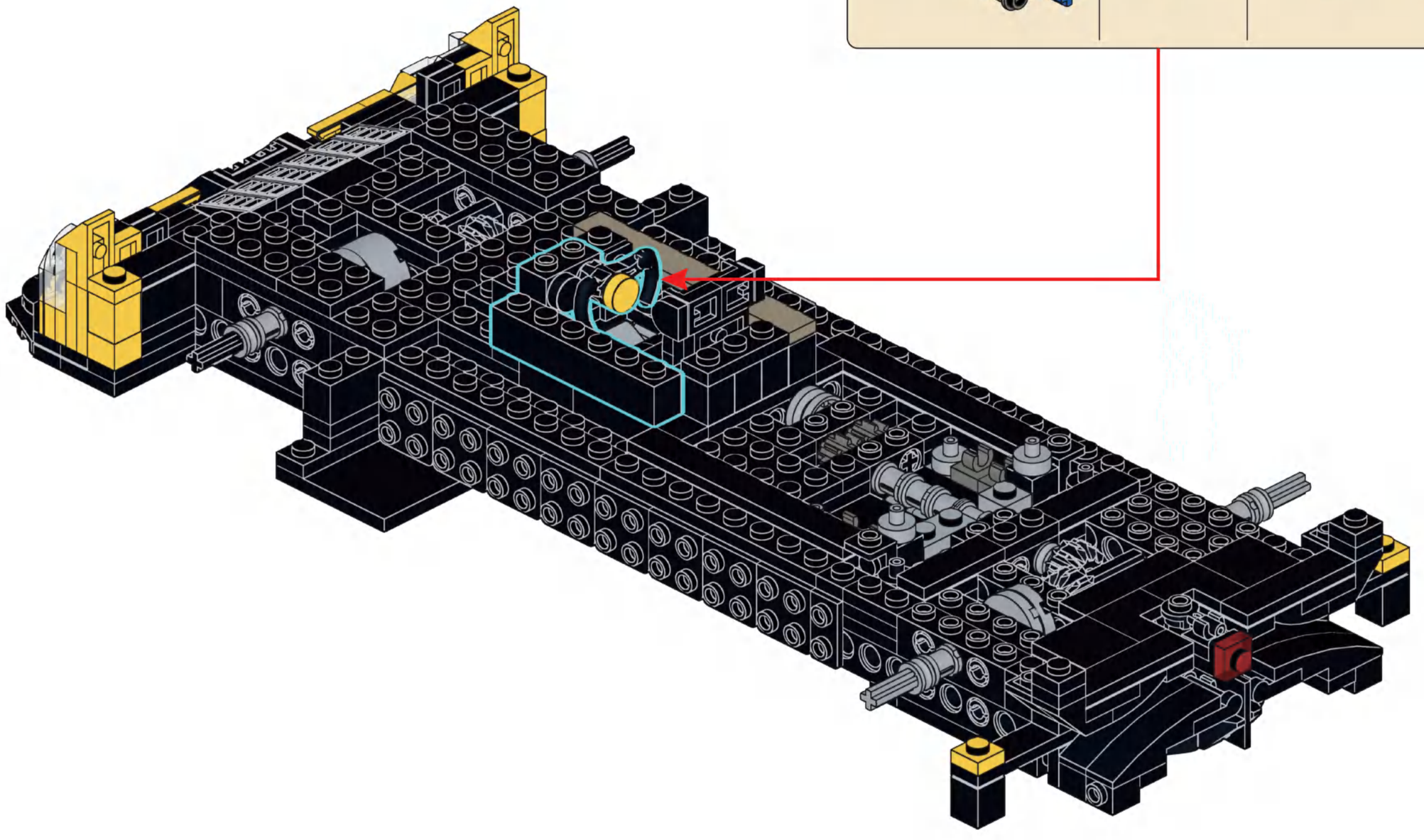

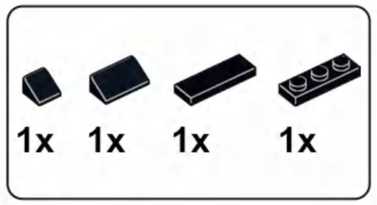

B27

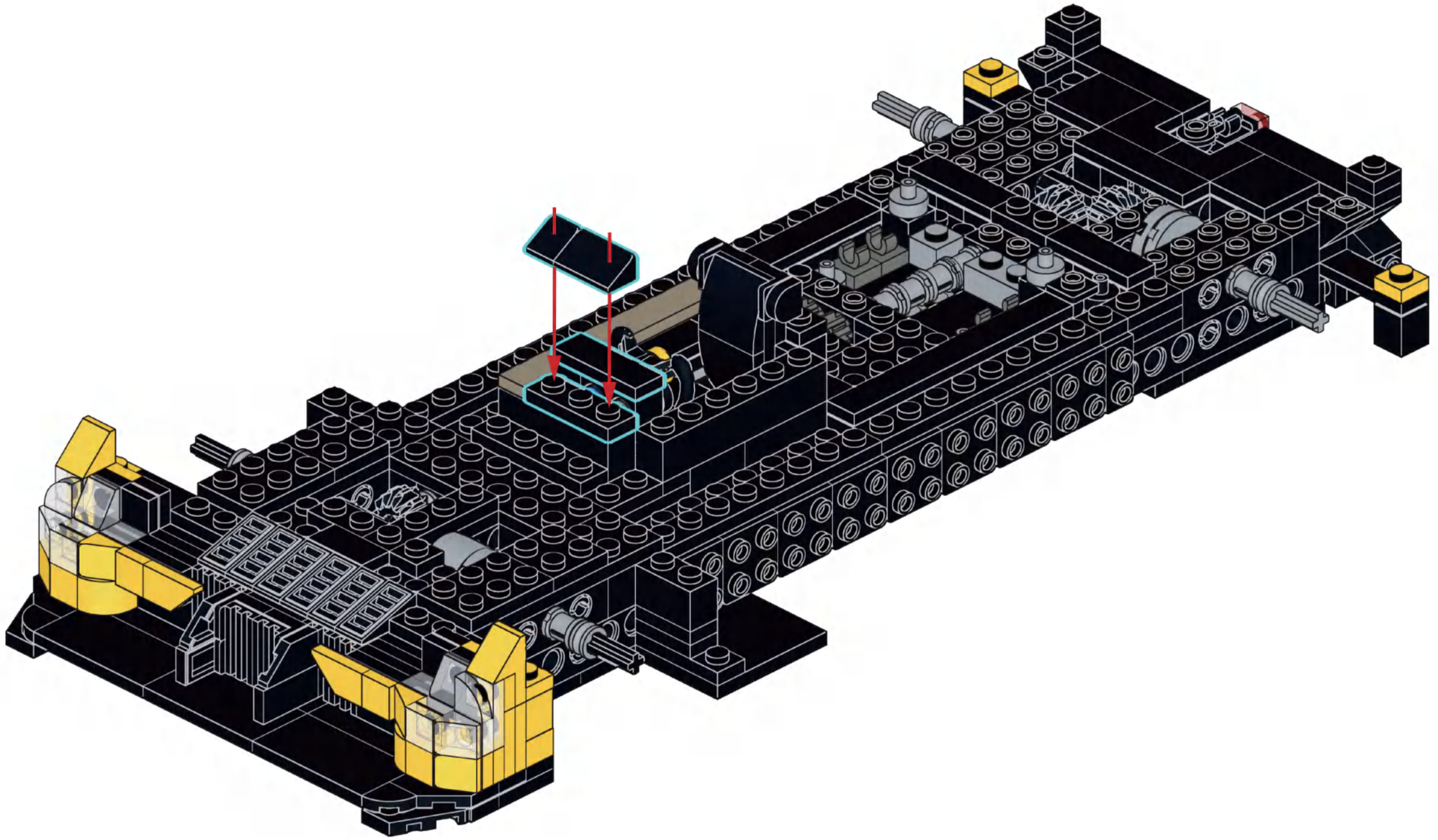

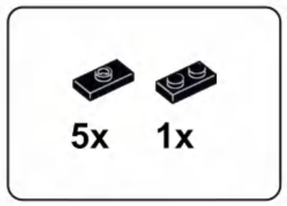

B28

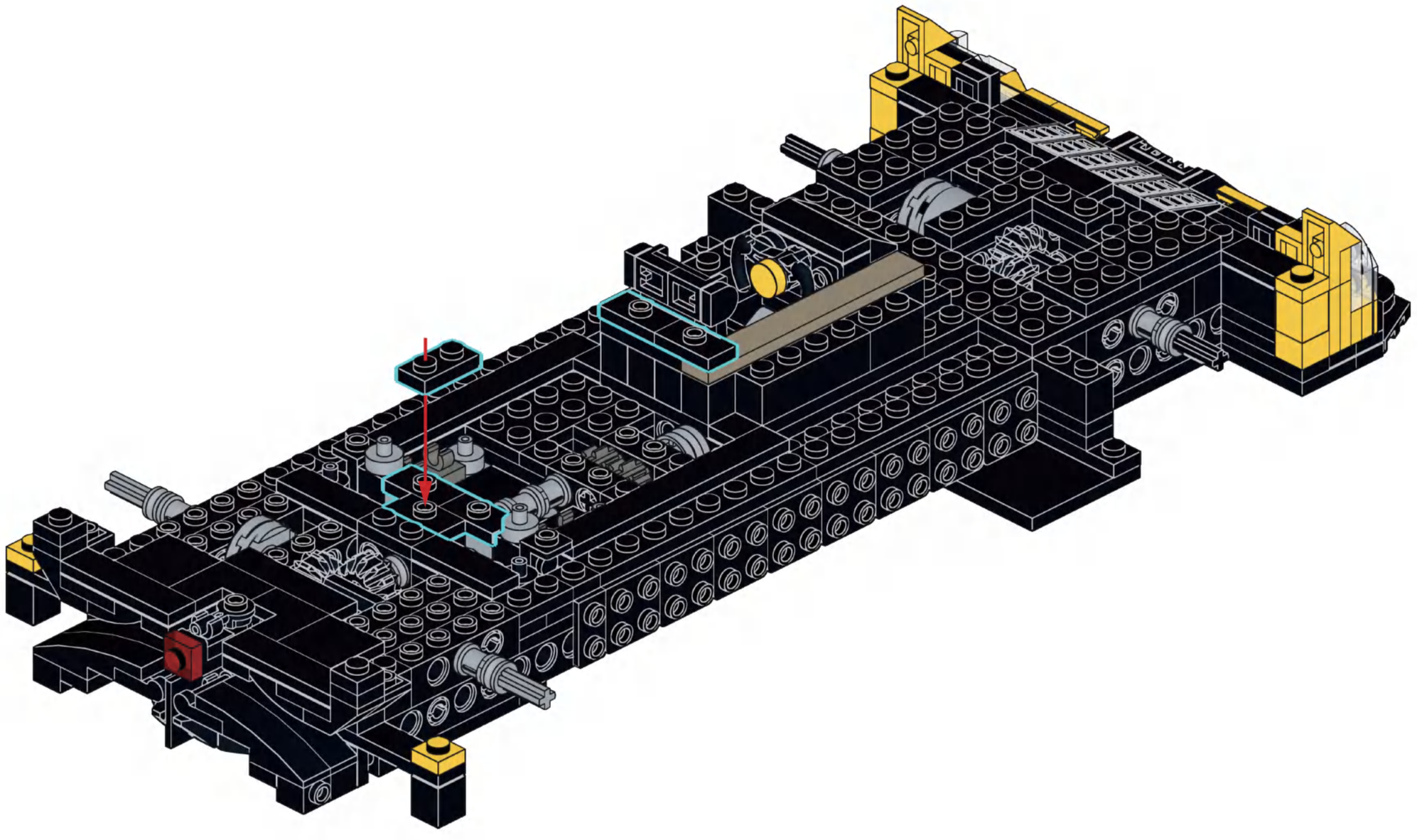

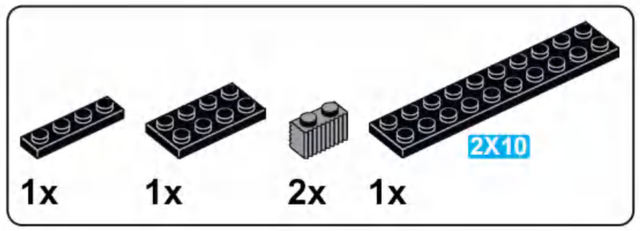

B29

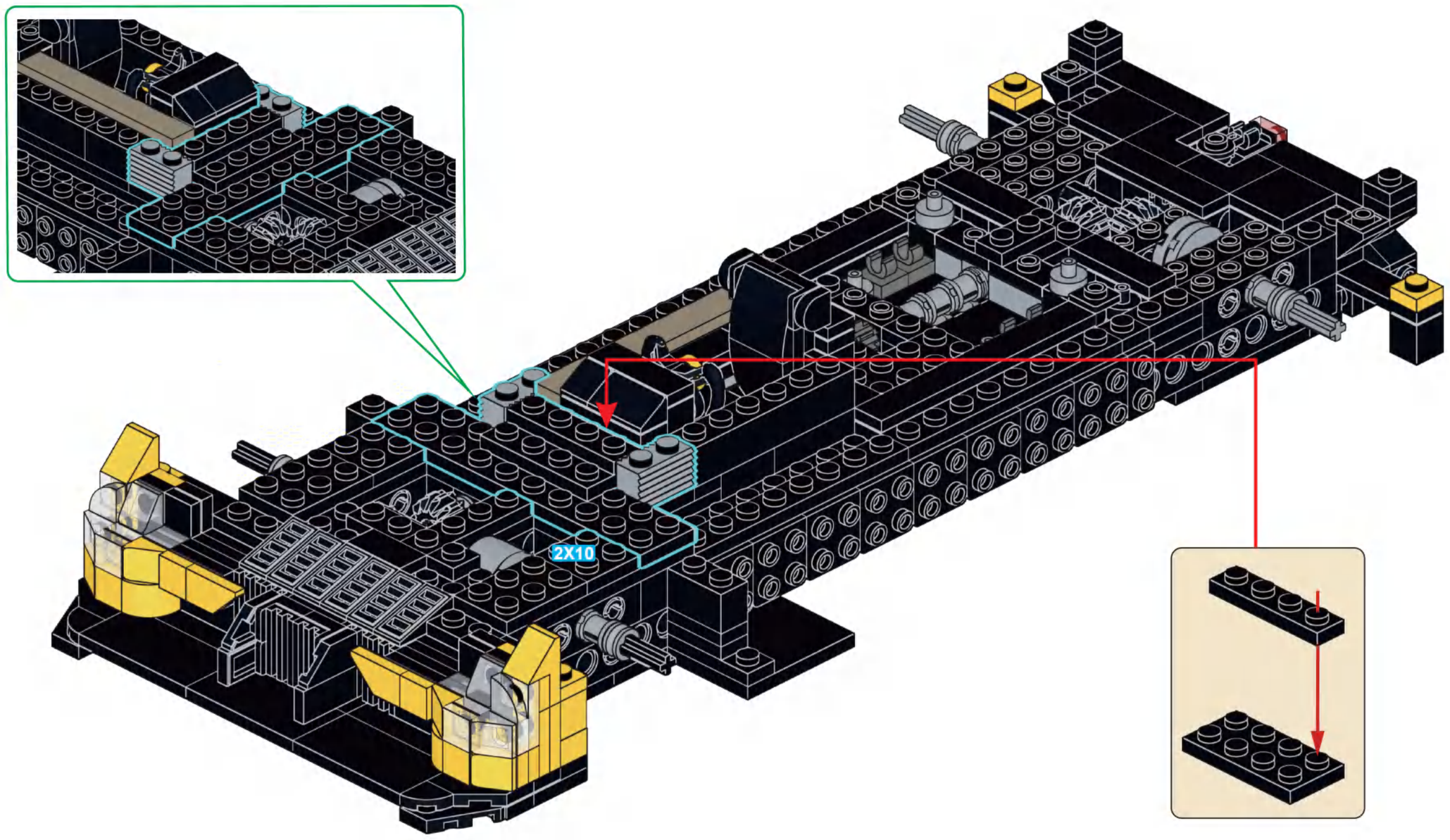

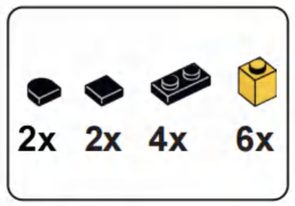

B30

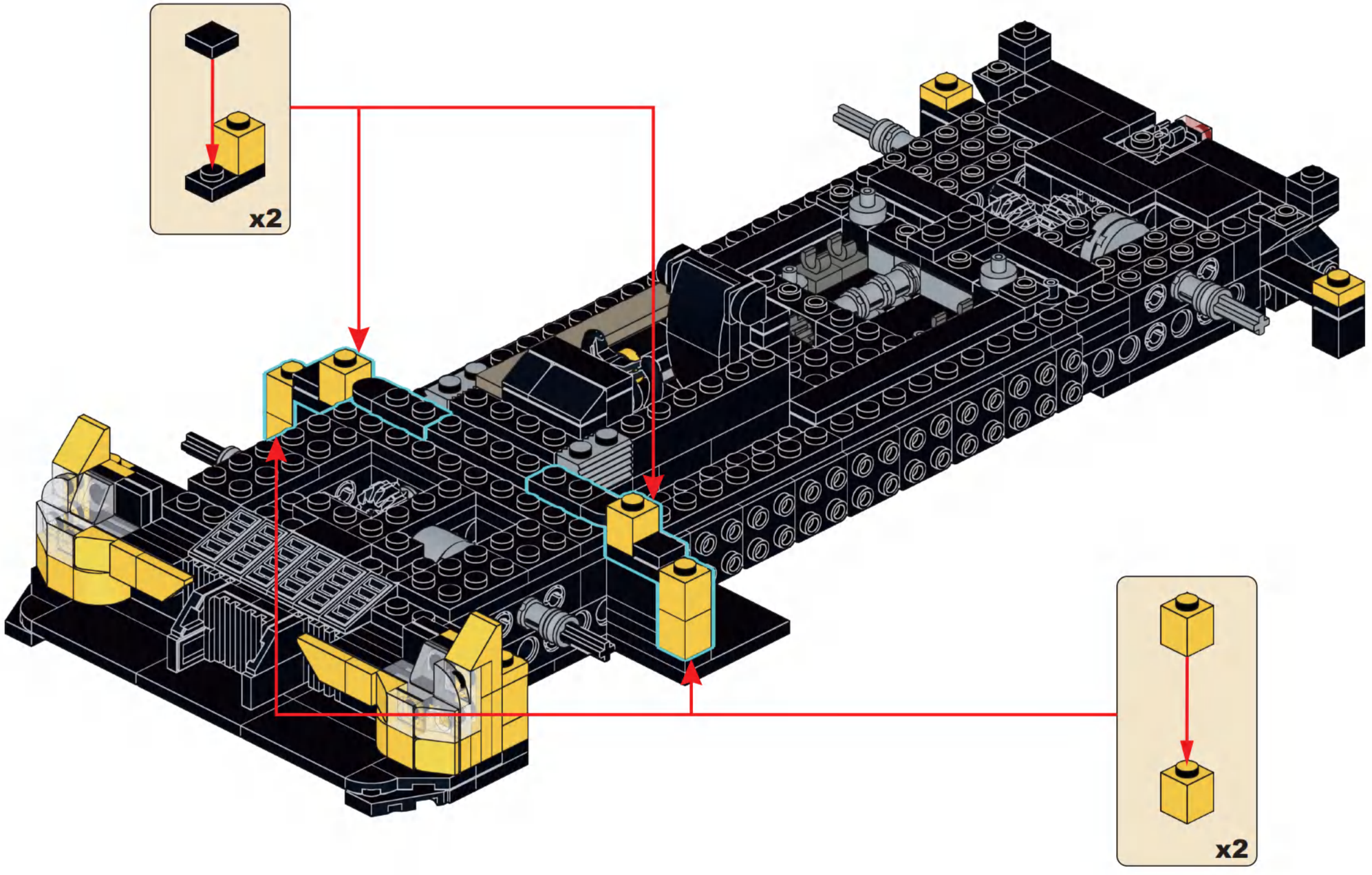

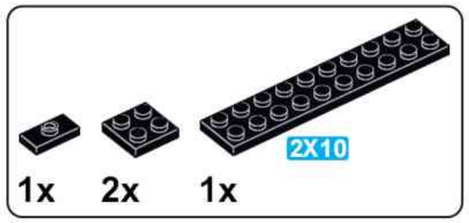

B31

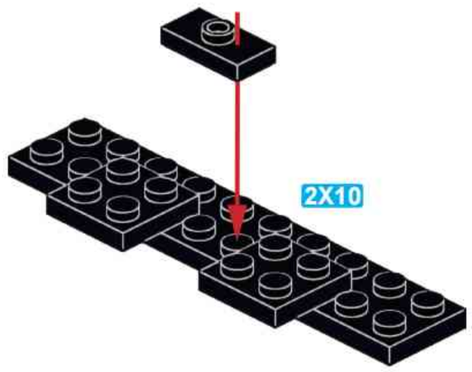

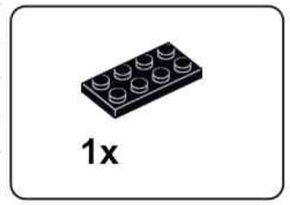

B32

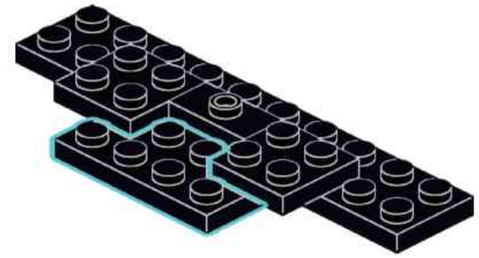

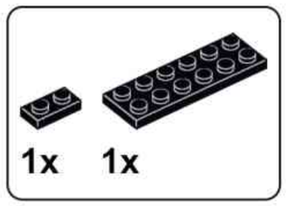

B33

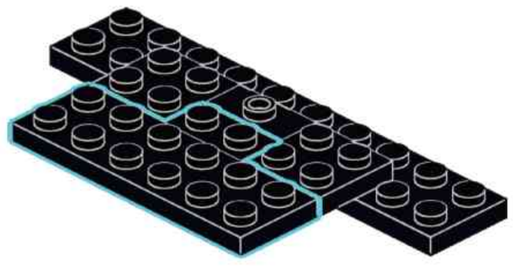

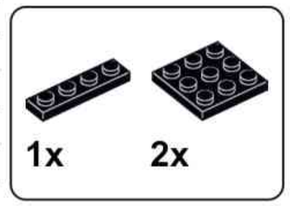

B34

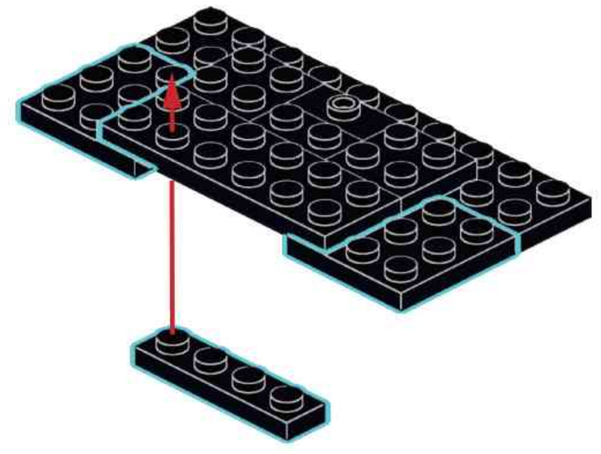

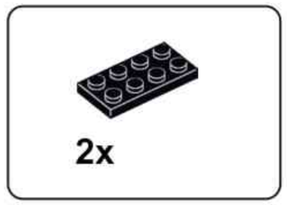

B35

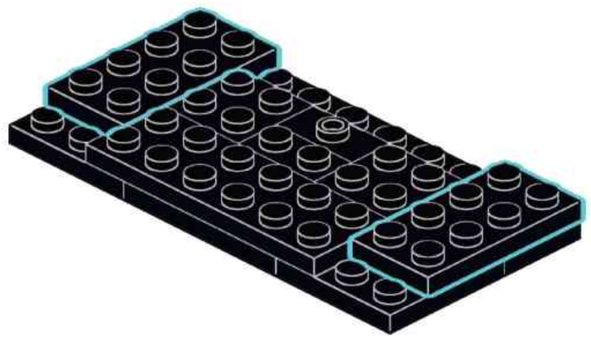

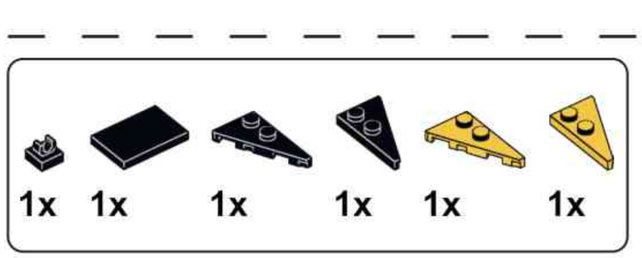

B37

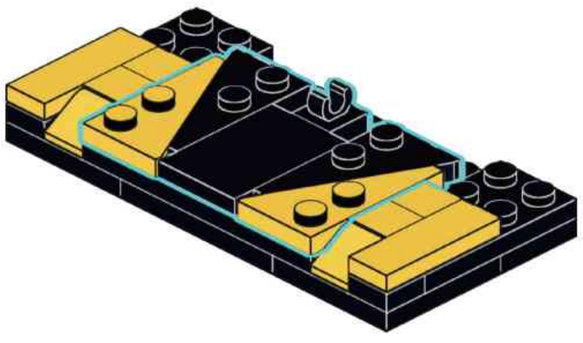

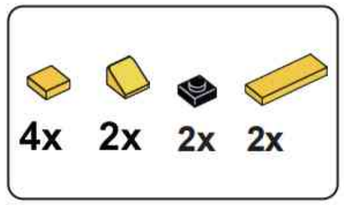

B36

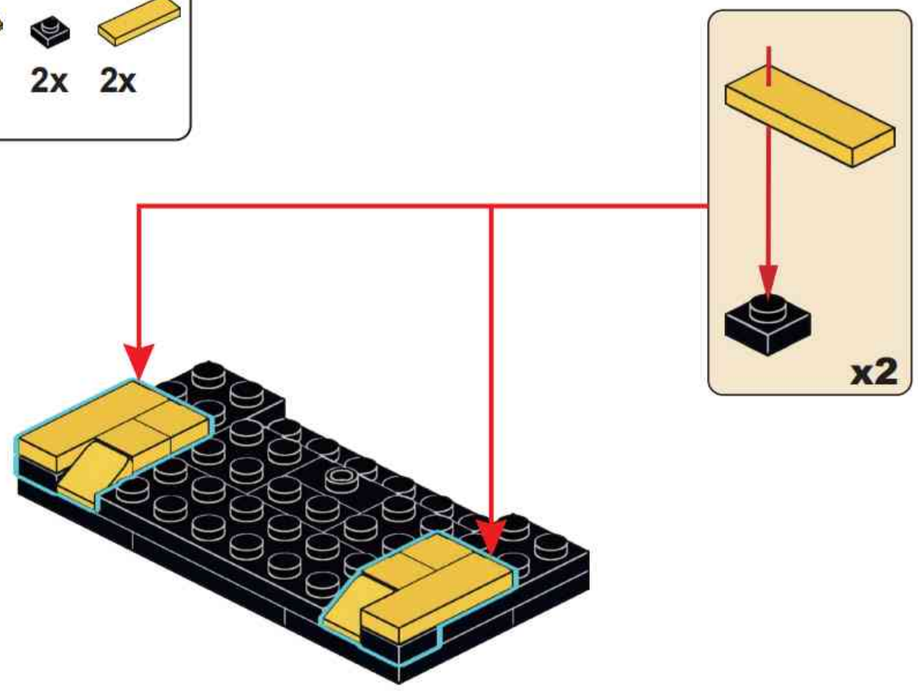

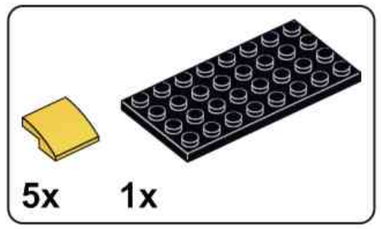

B38

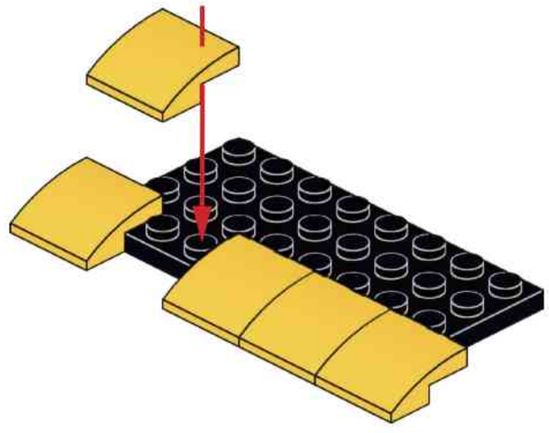

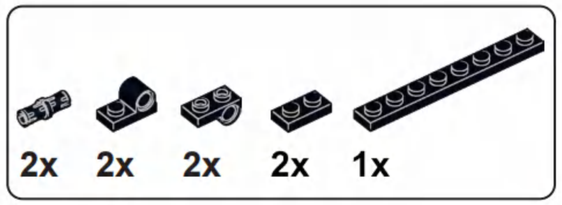

B39

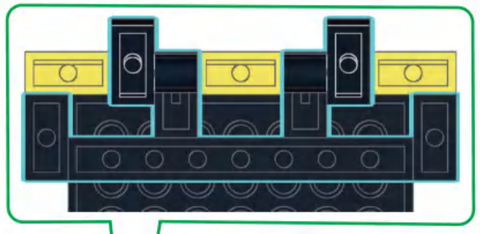

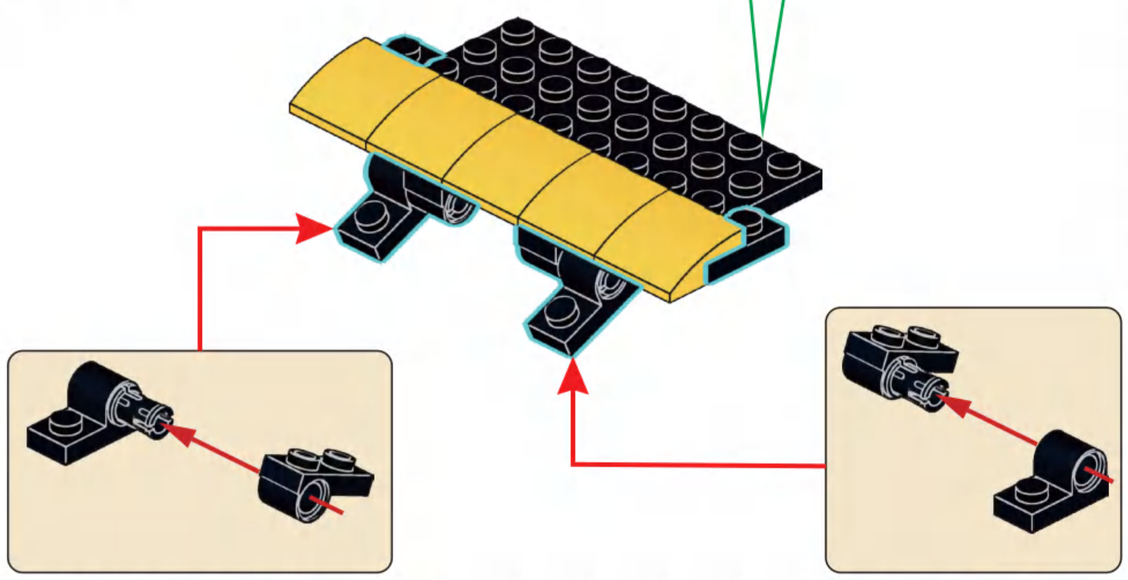

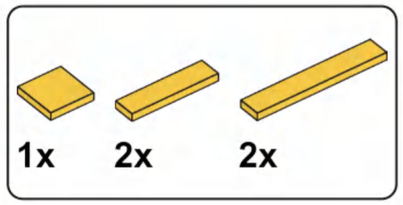

B40

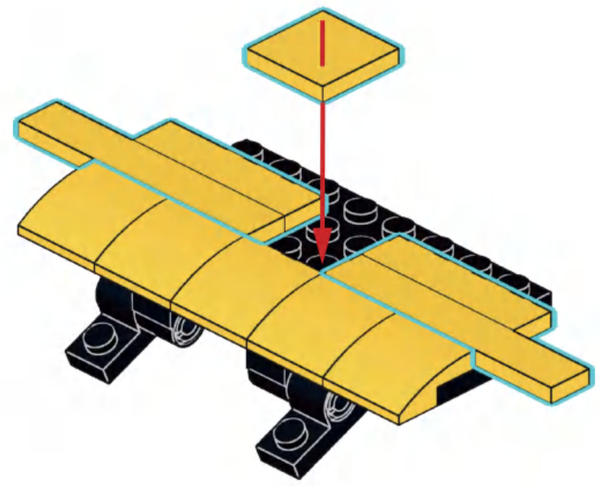

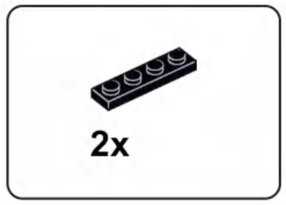

B41

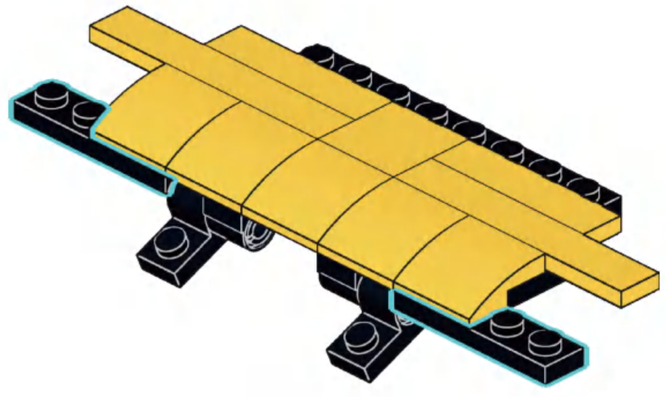

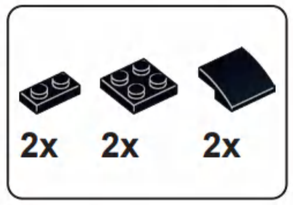

B42

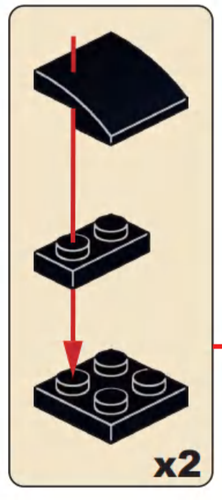

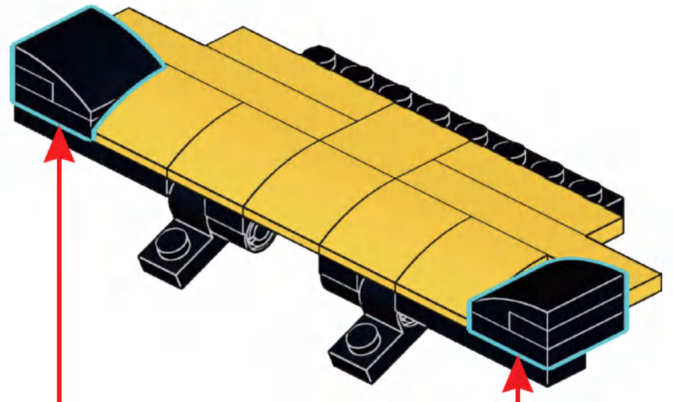

2x 1x 1x

B43

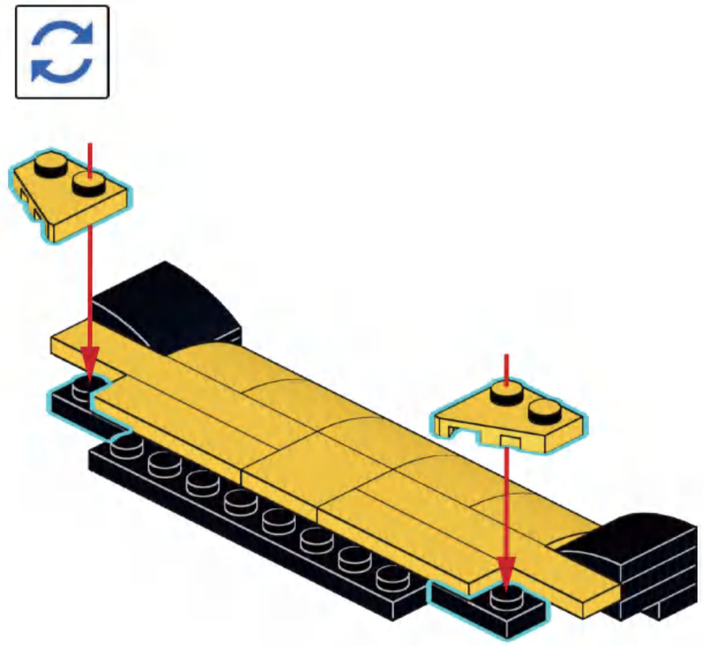

1x 1x 1x 1x

B44

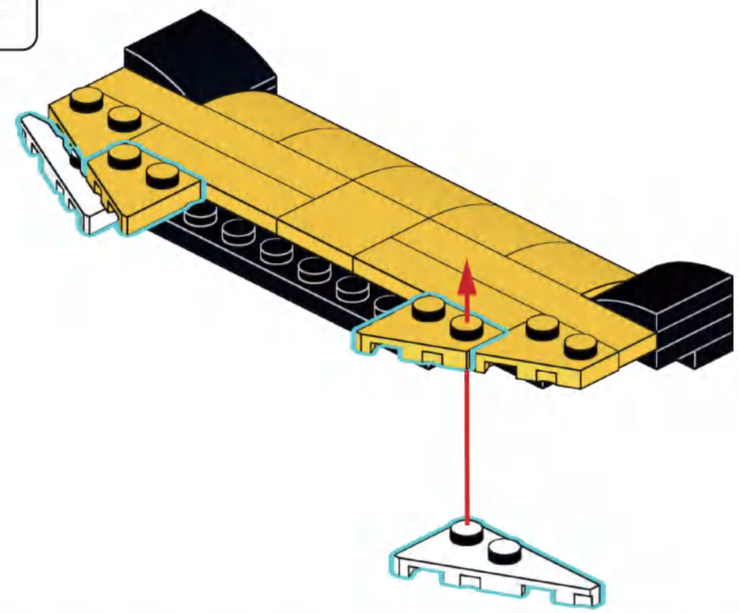

2x 2x 1x 1x

B45

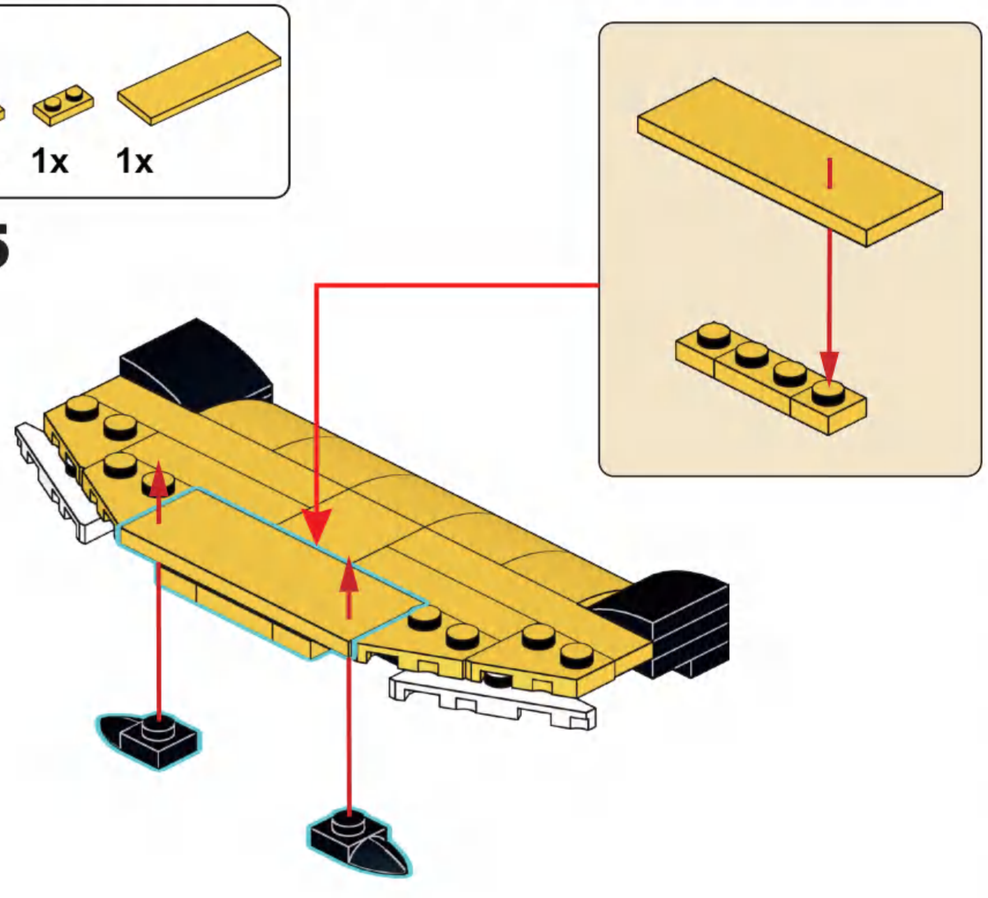

B46

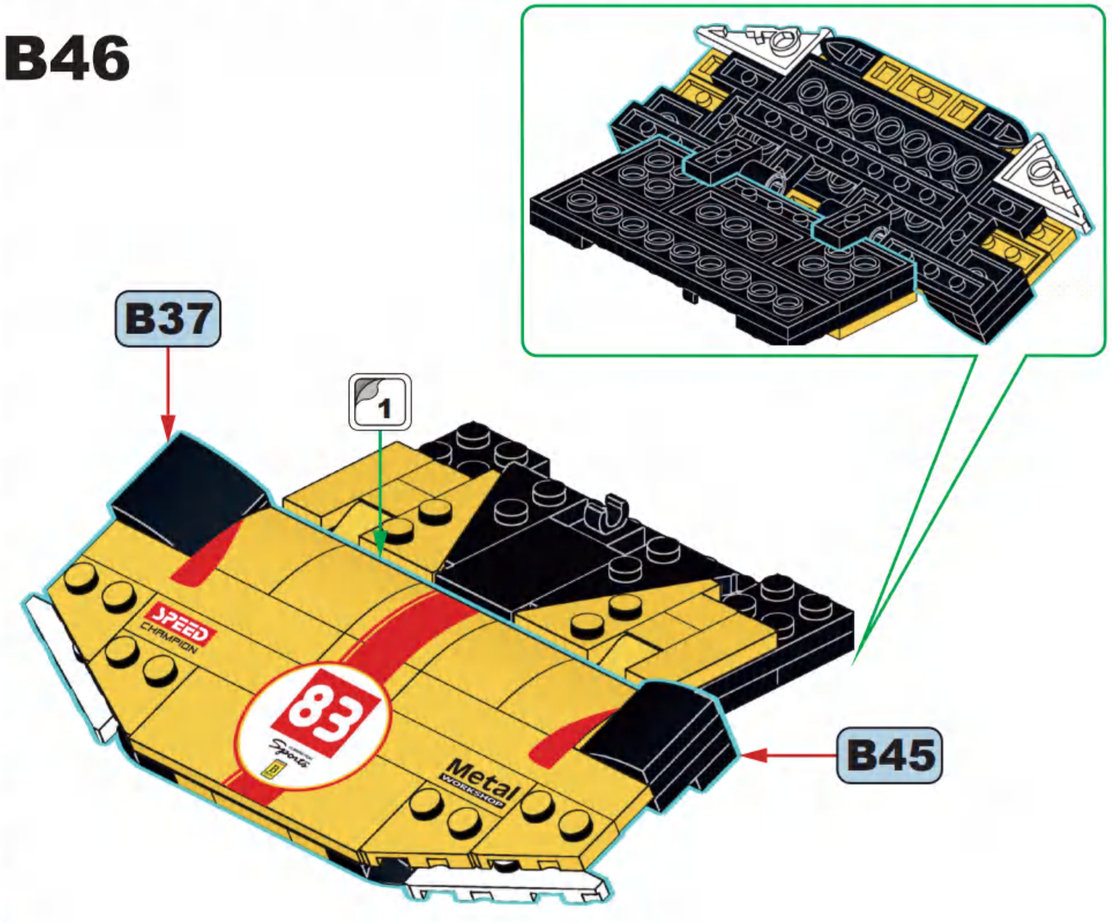

B47

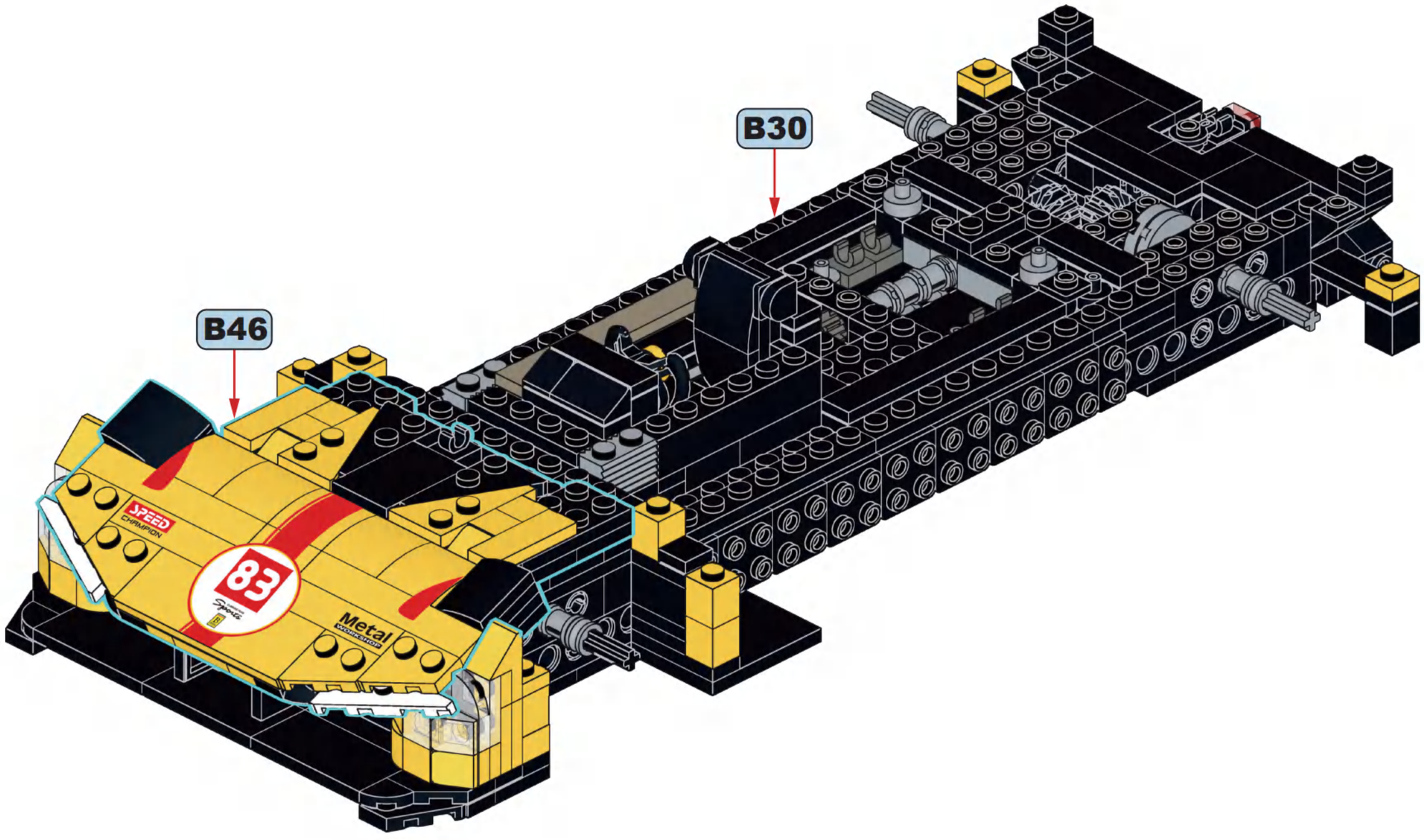

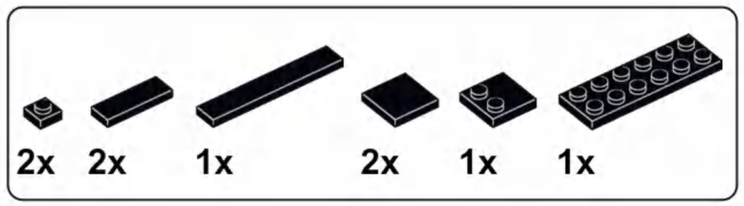

B48

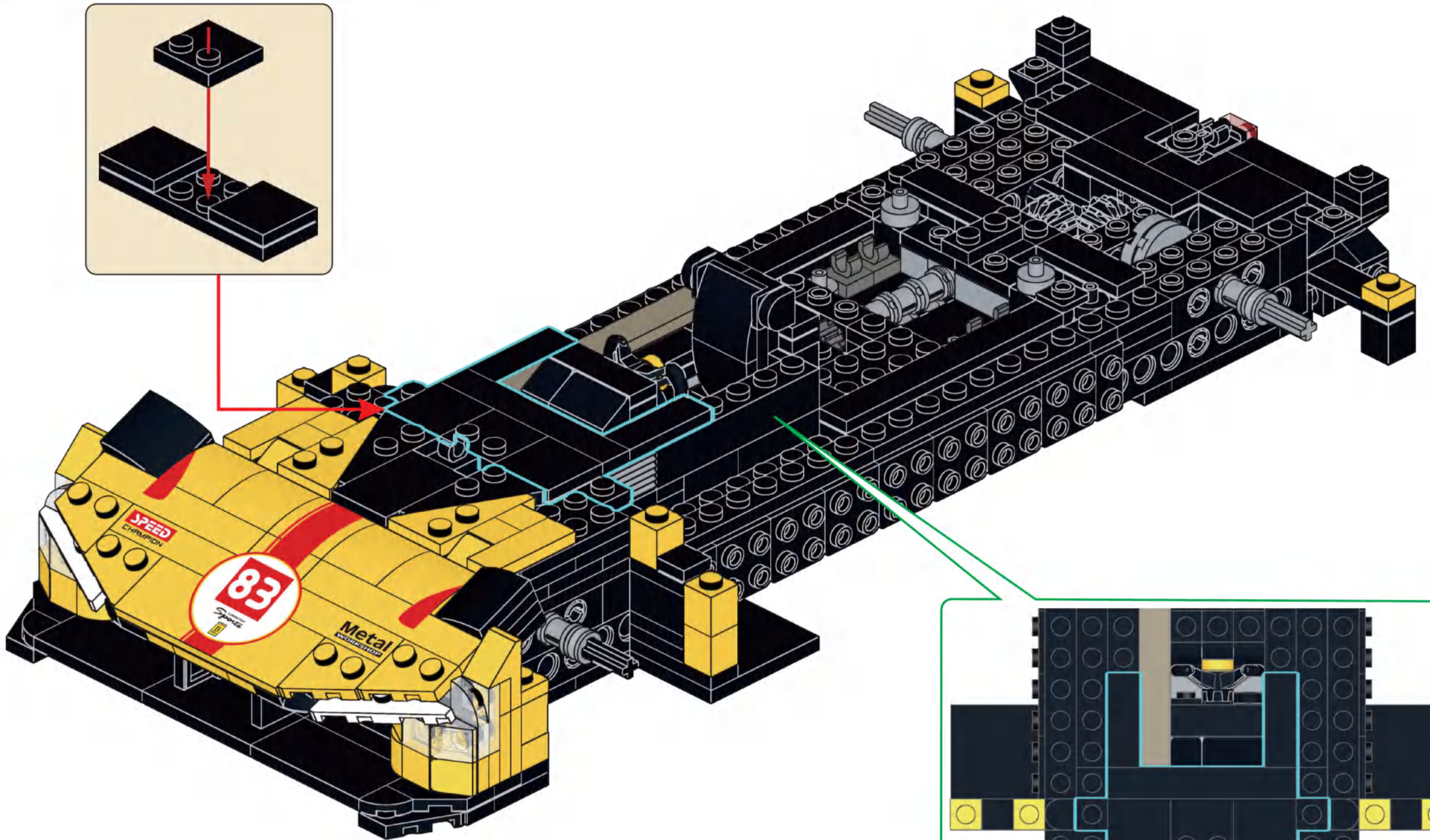

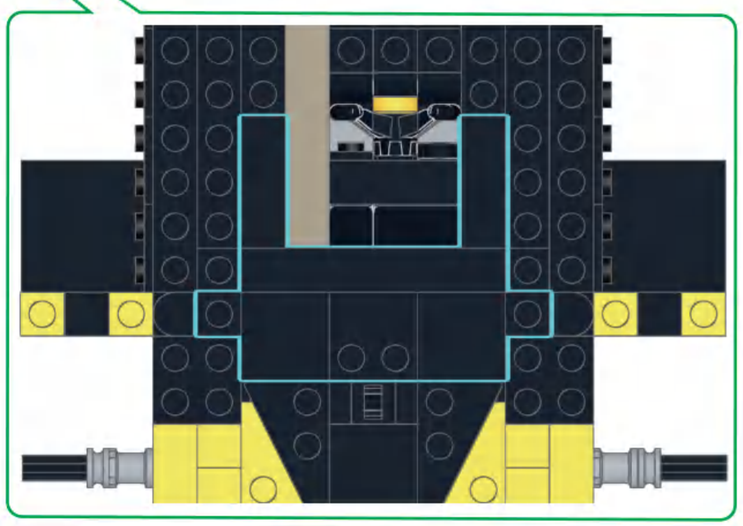

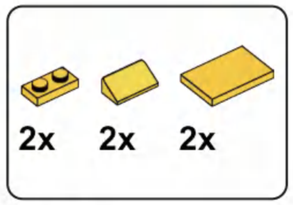

B49

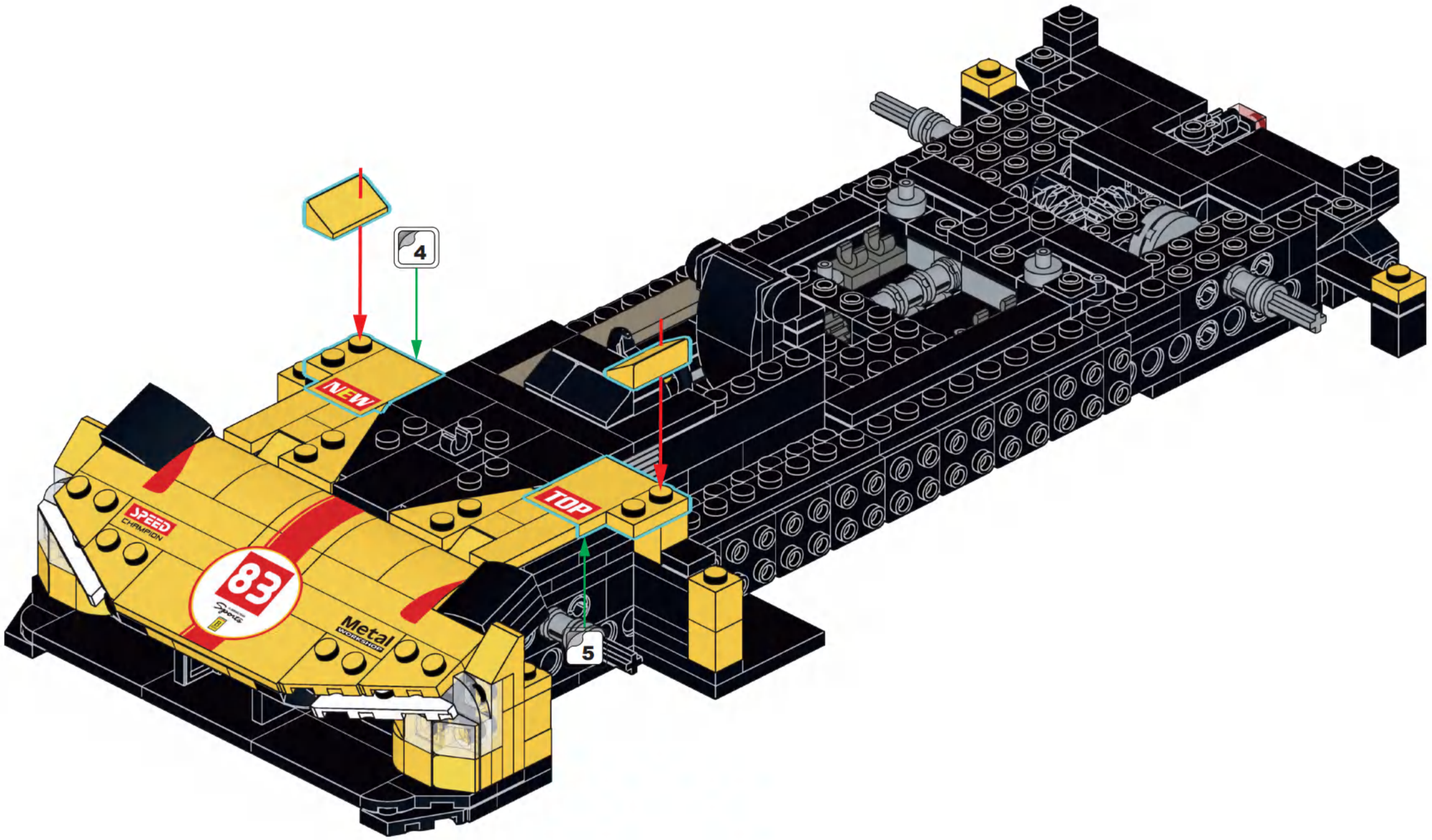

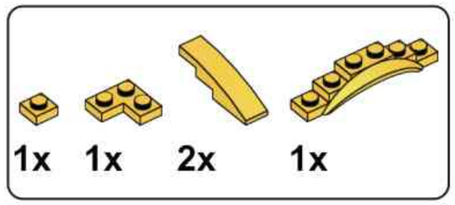

B50

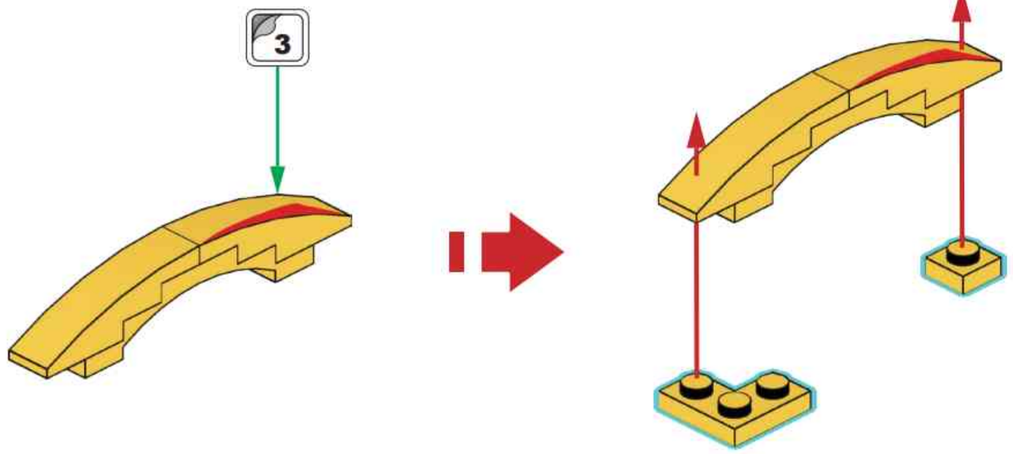

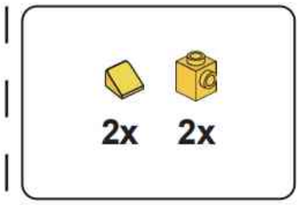

B51

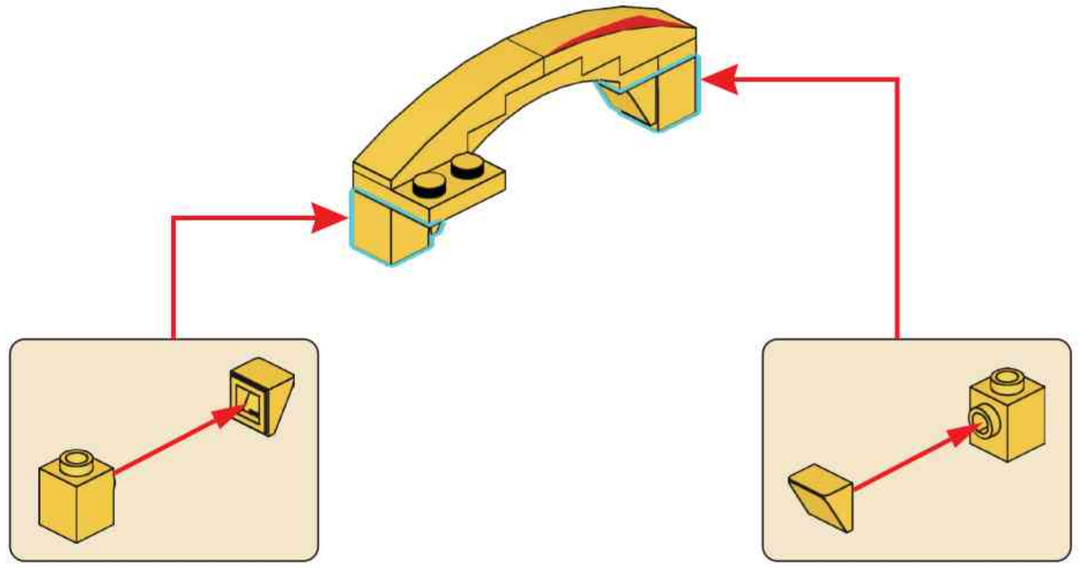

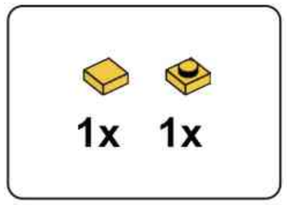

B52

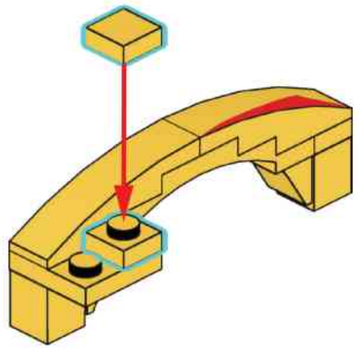

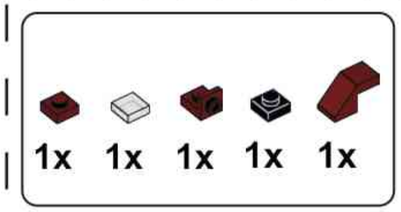

B53

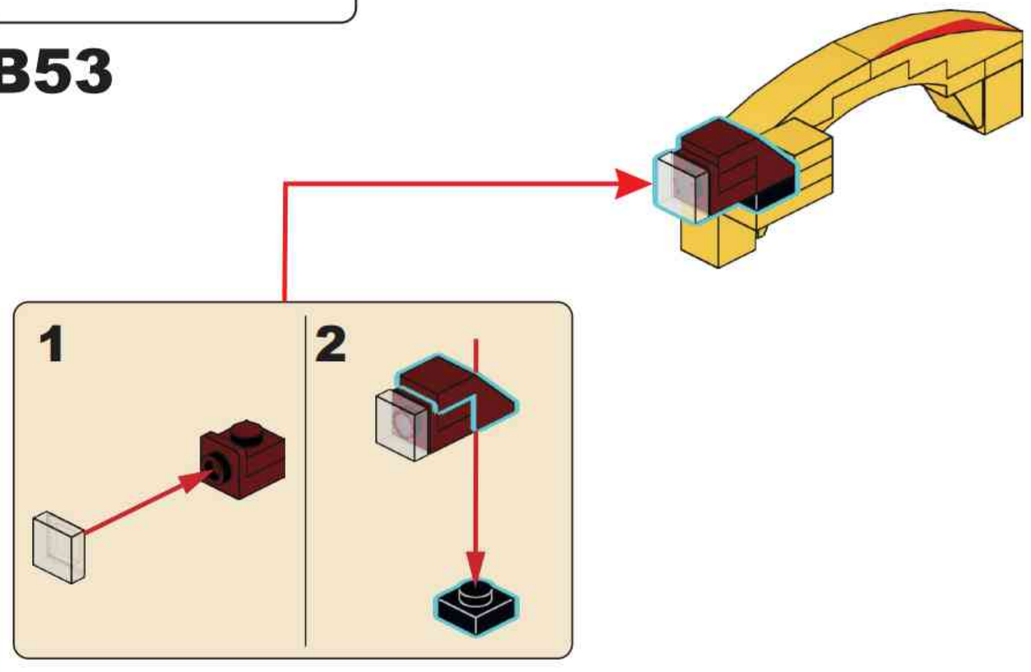

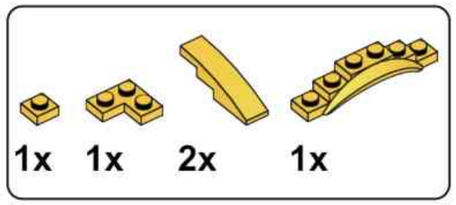

B54

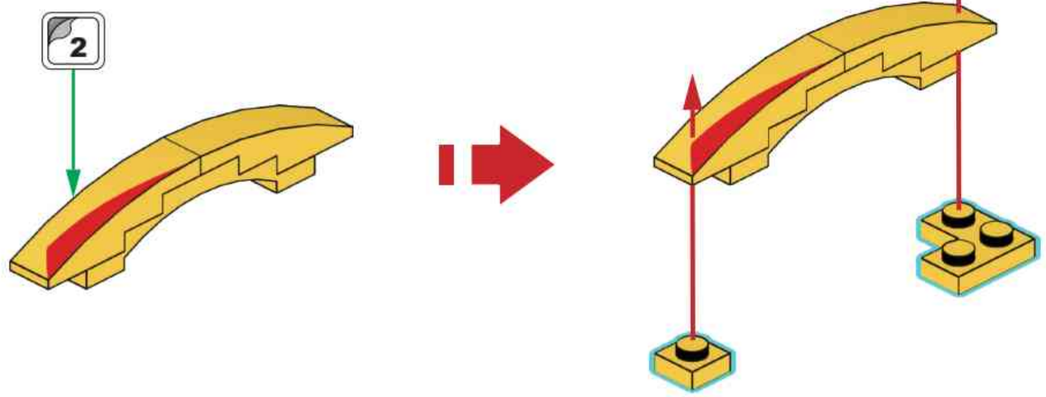

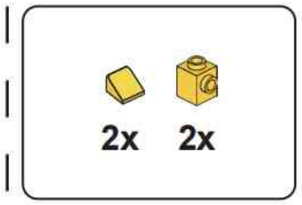

B55

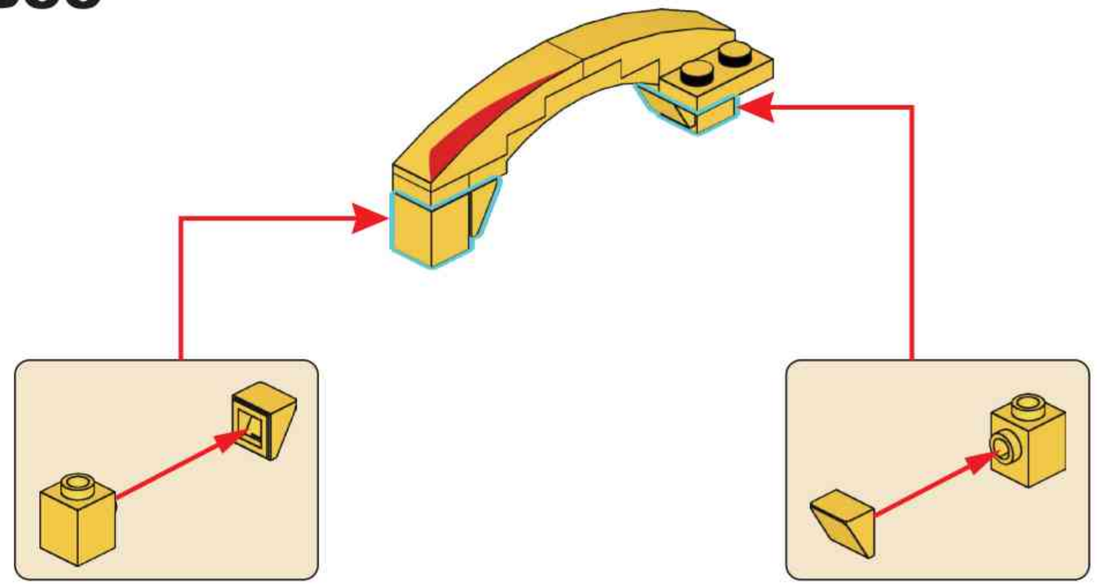

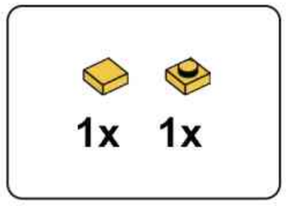

B56

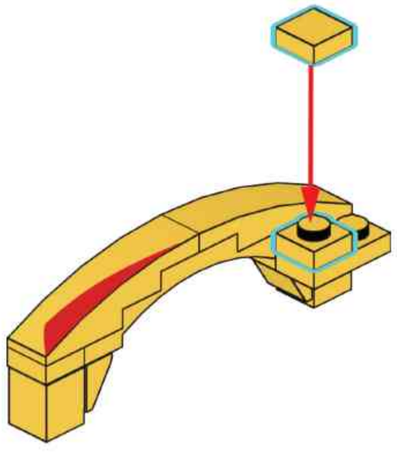

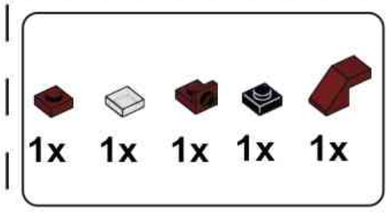

B57

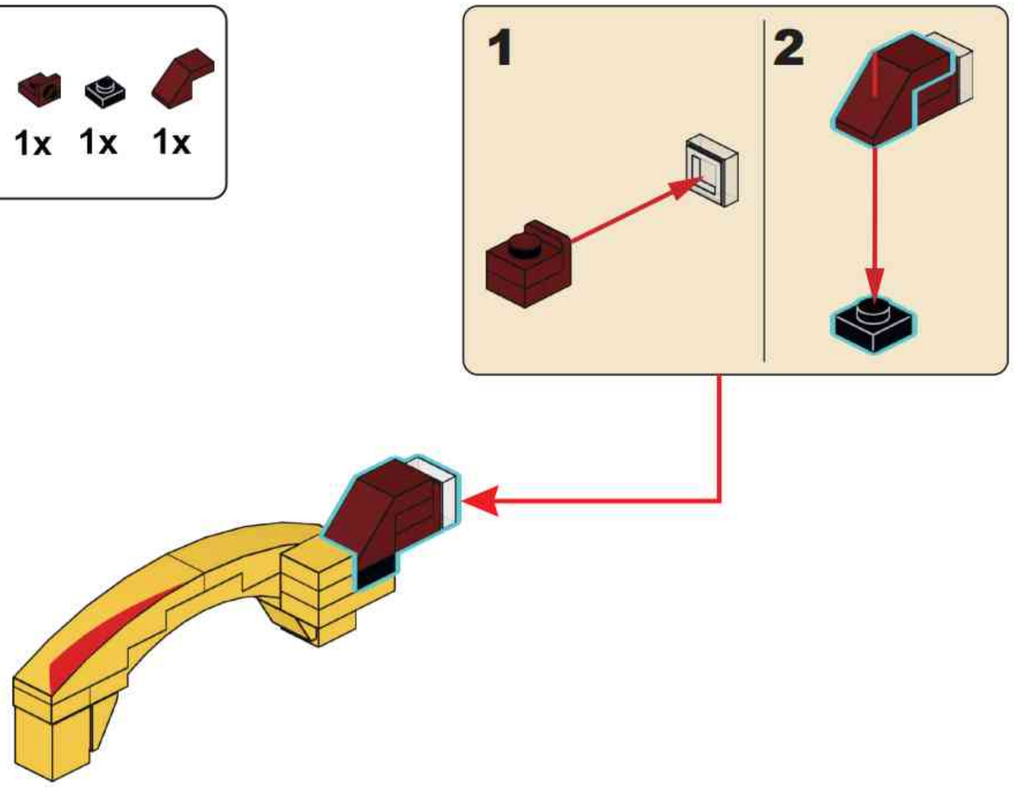

B58

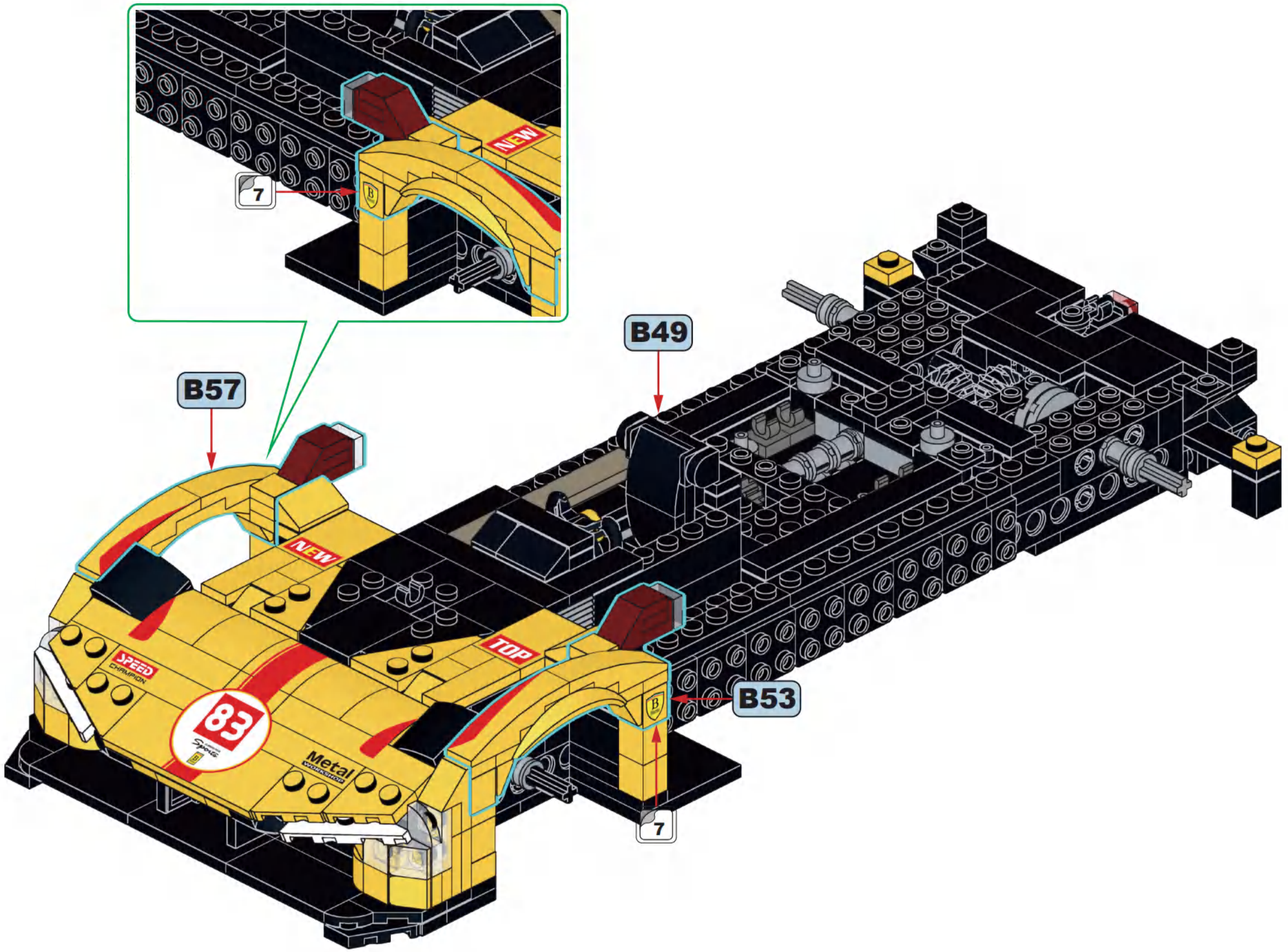

3

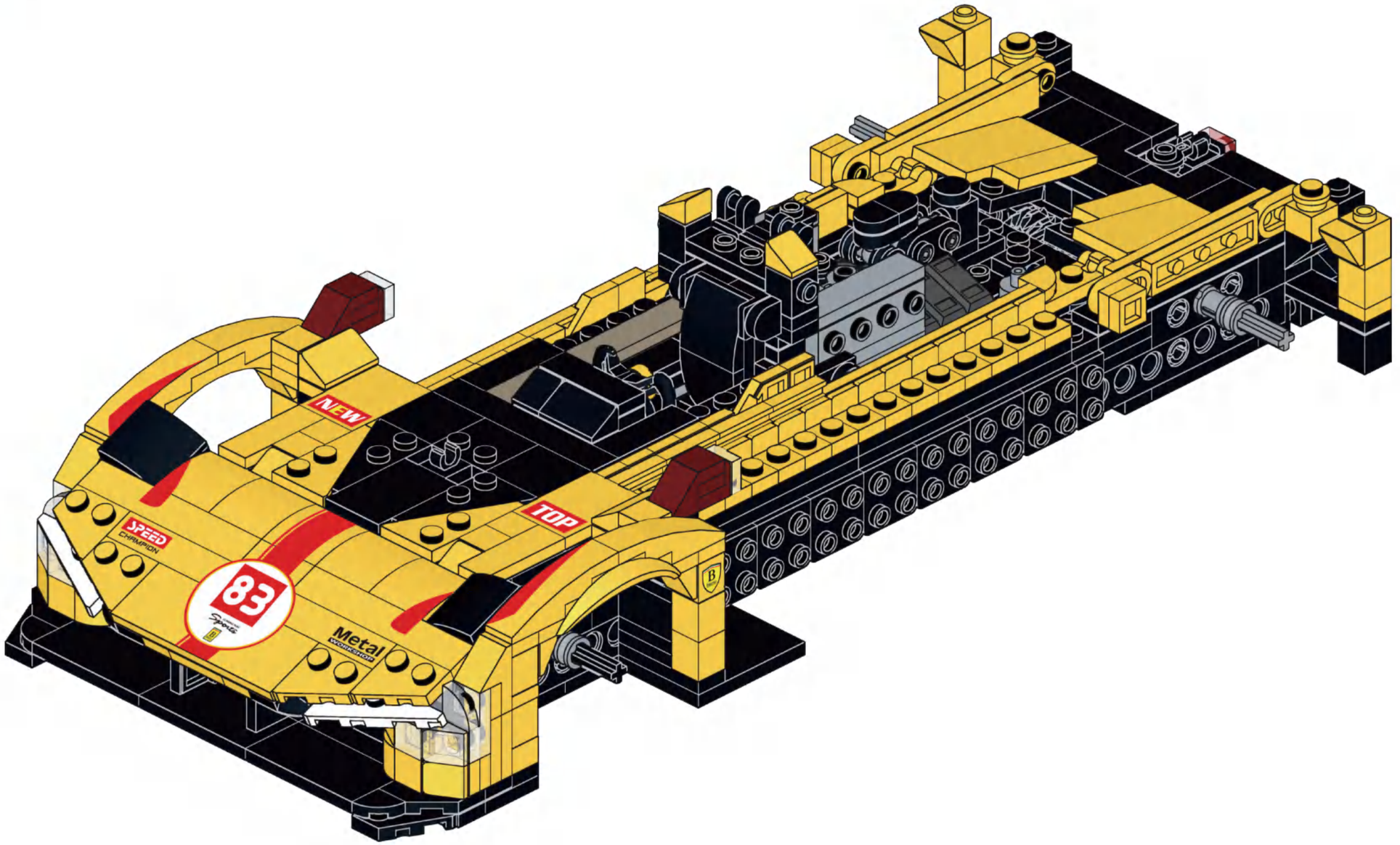

C

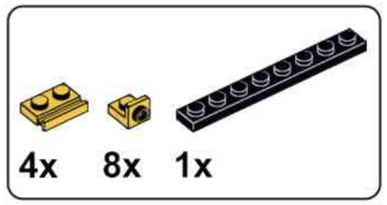

C1

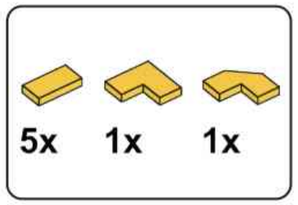

C2

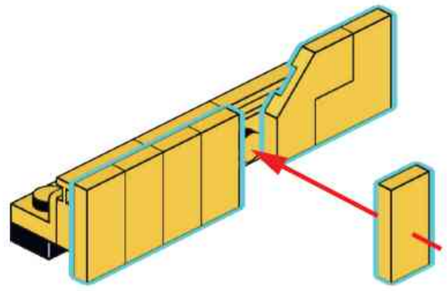

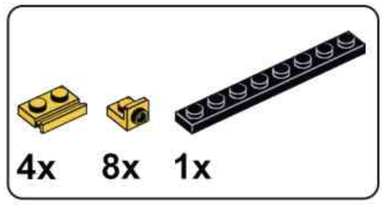

C3

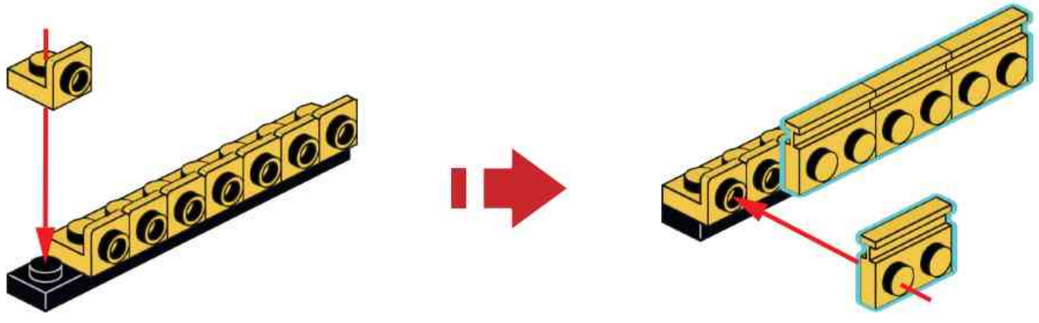

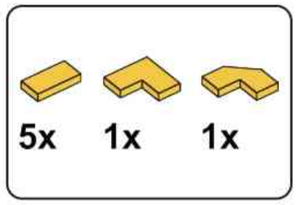

C4

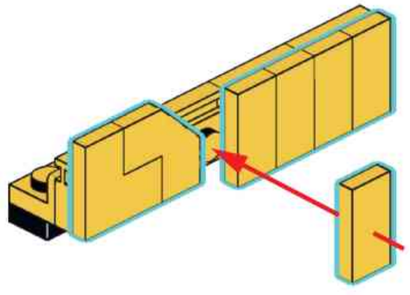

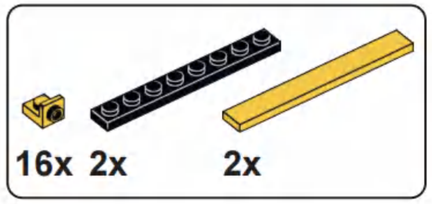

C5

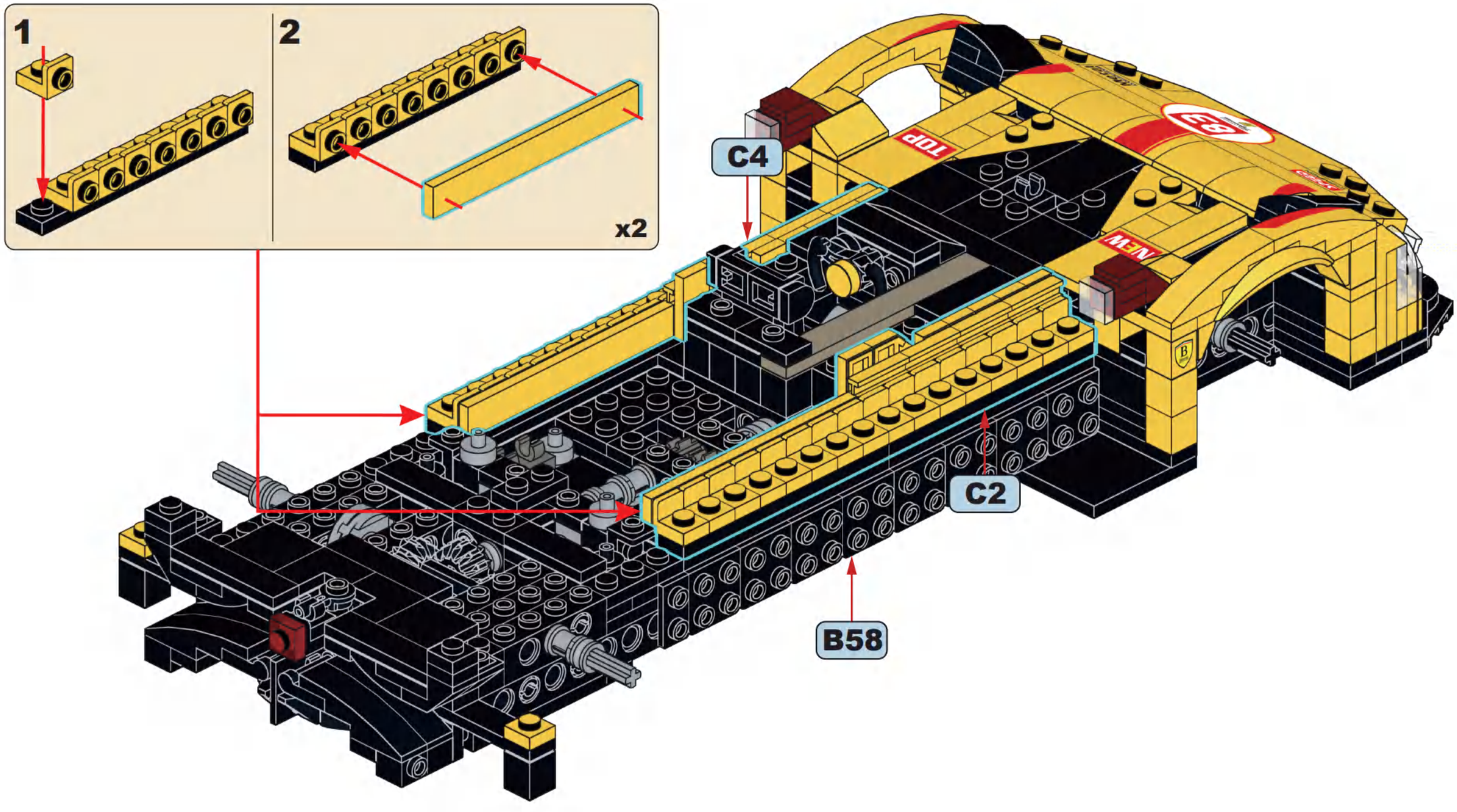

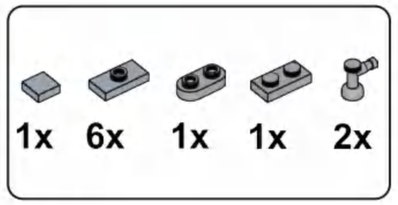

C6

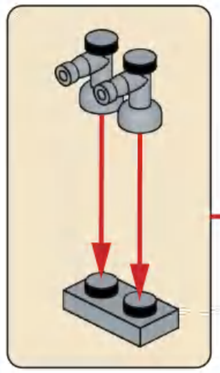

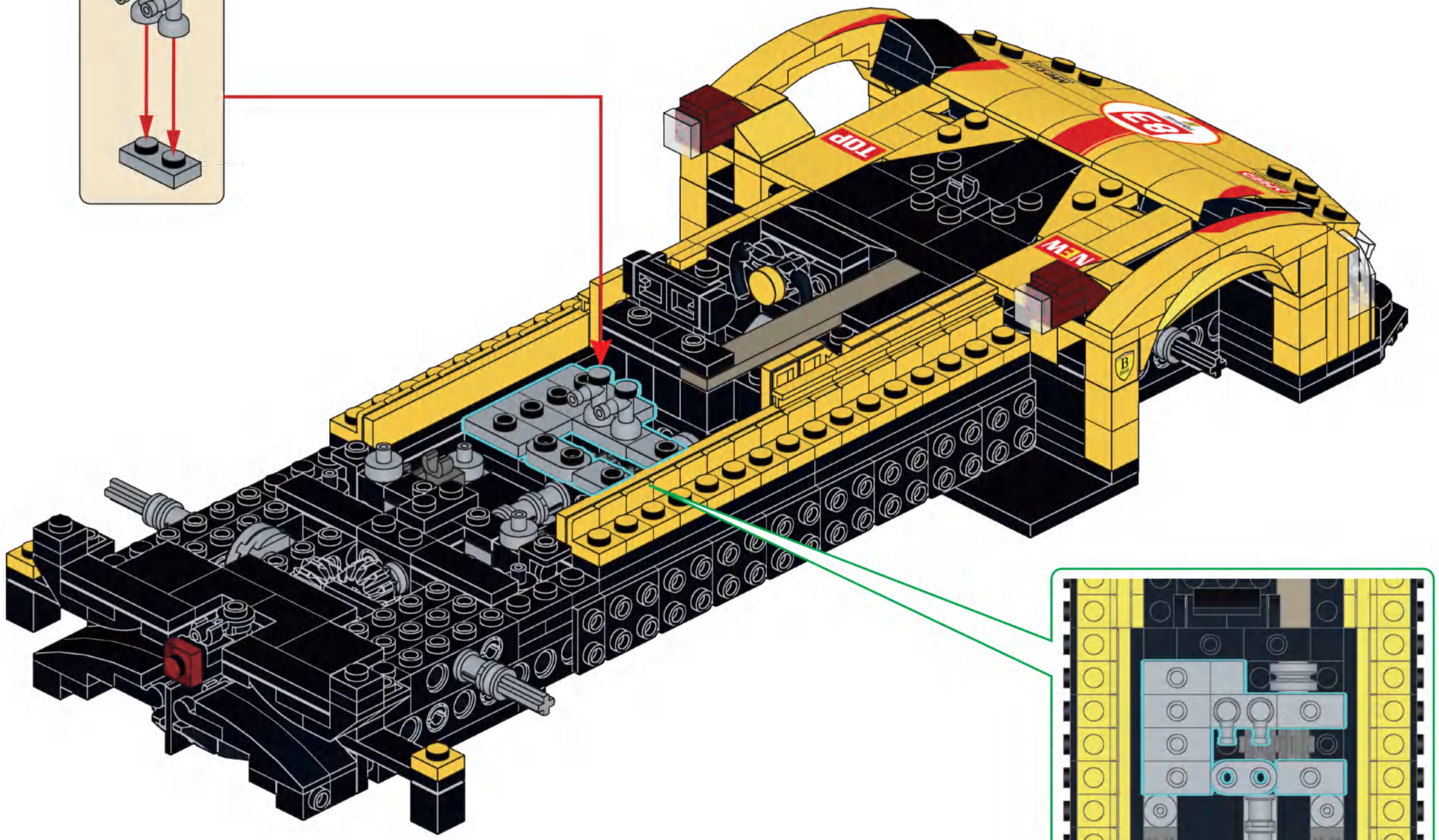

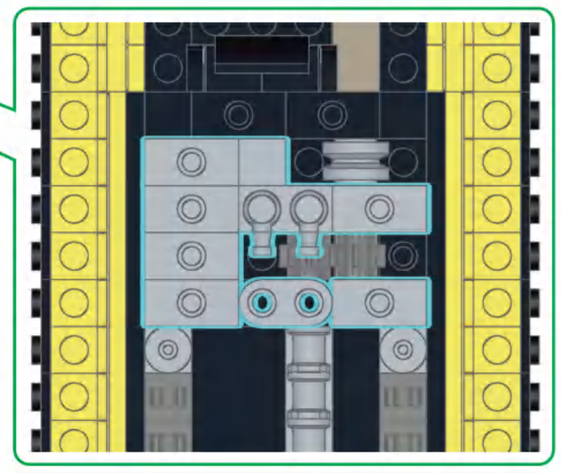

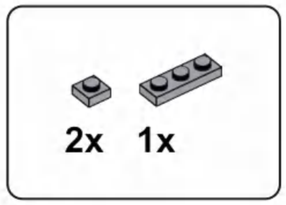

C7

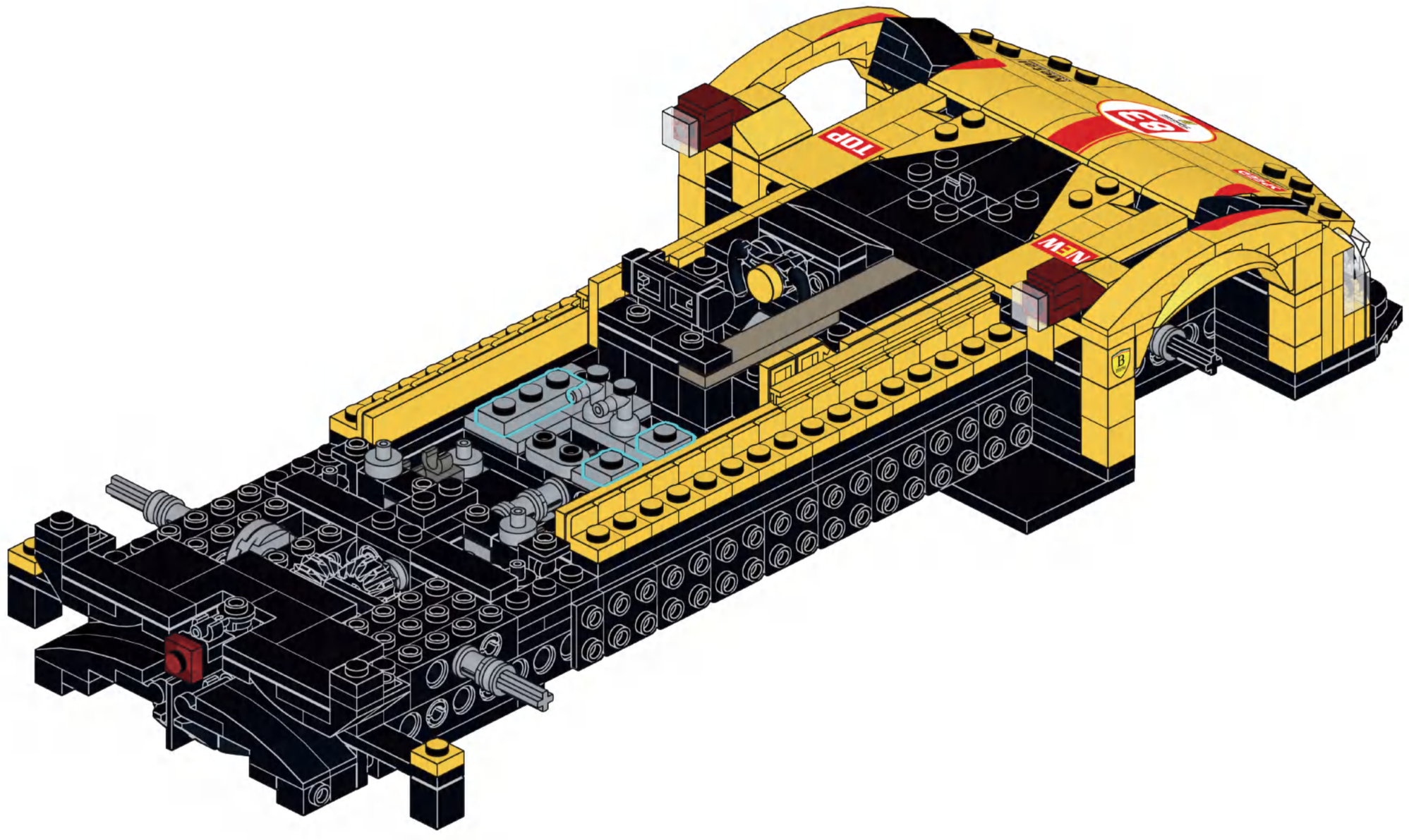

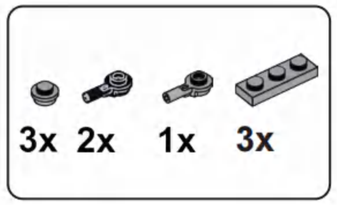

C8

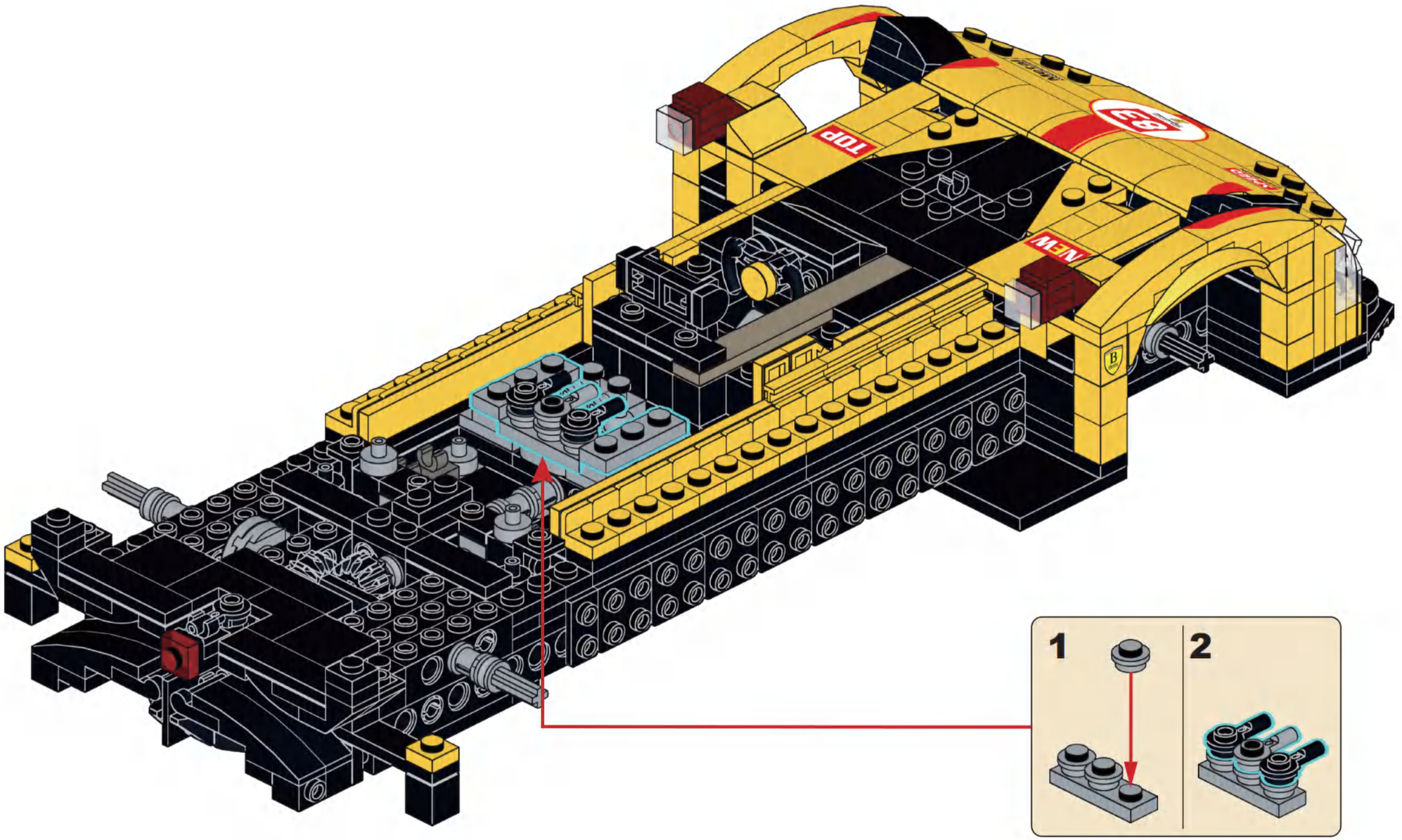

1x 1x 1x

C9

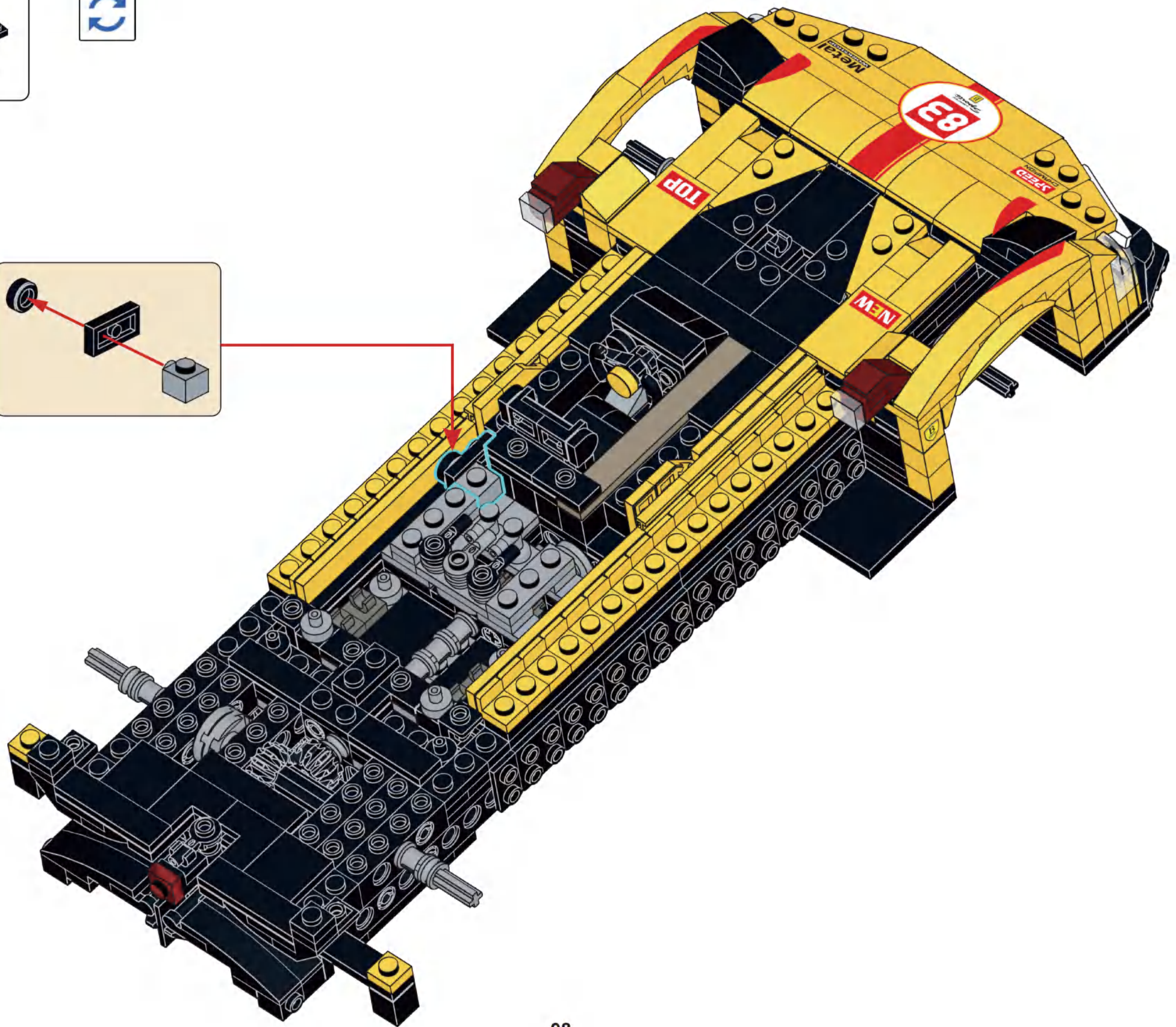

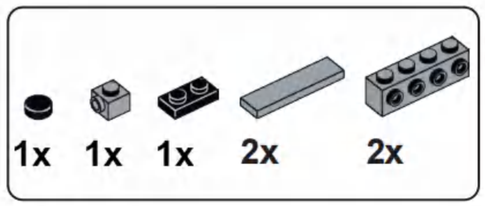

C10

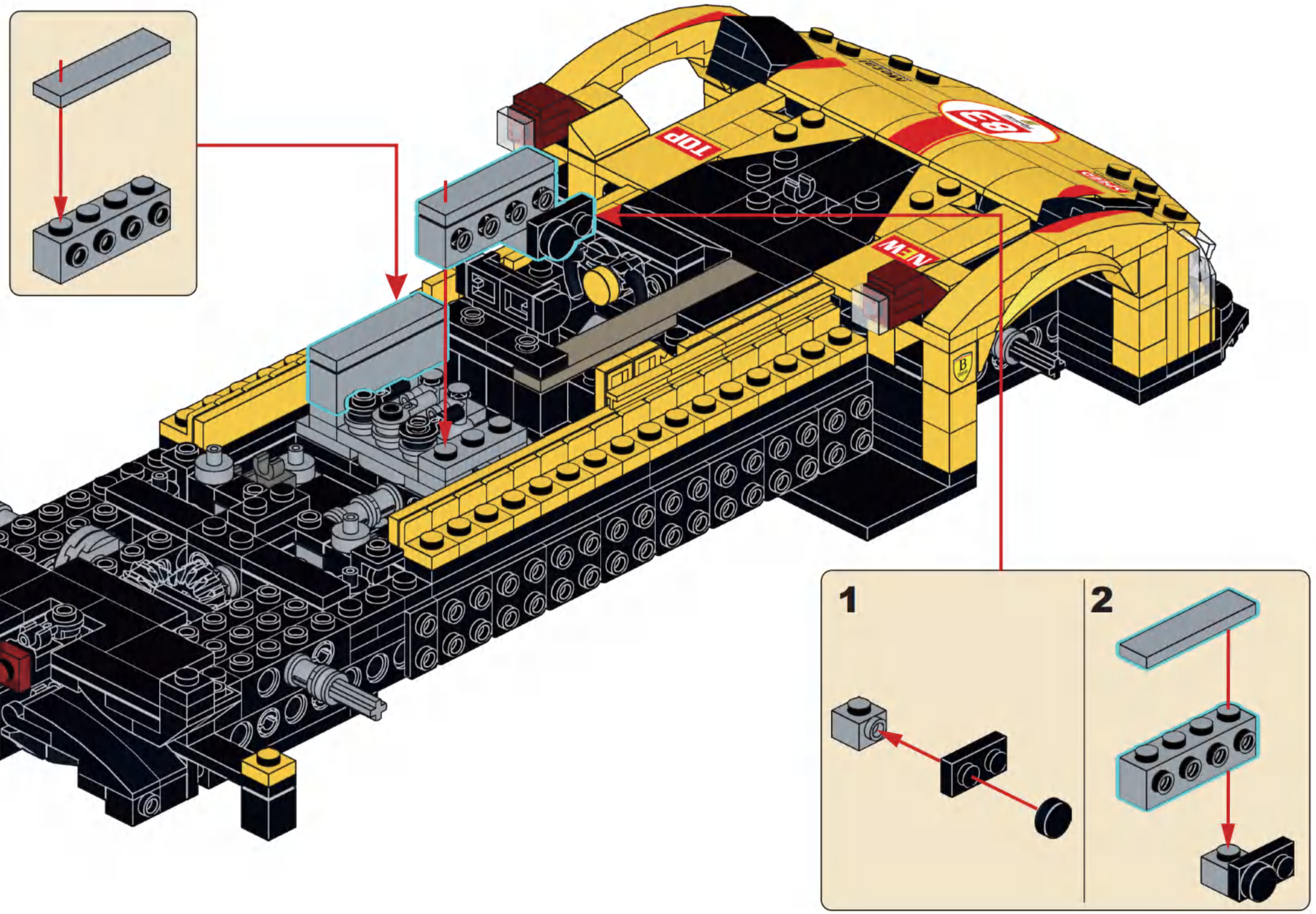

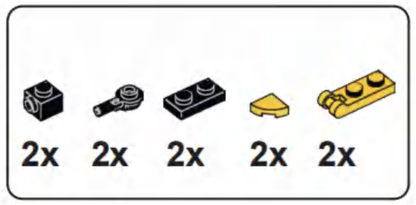

C11

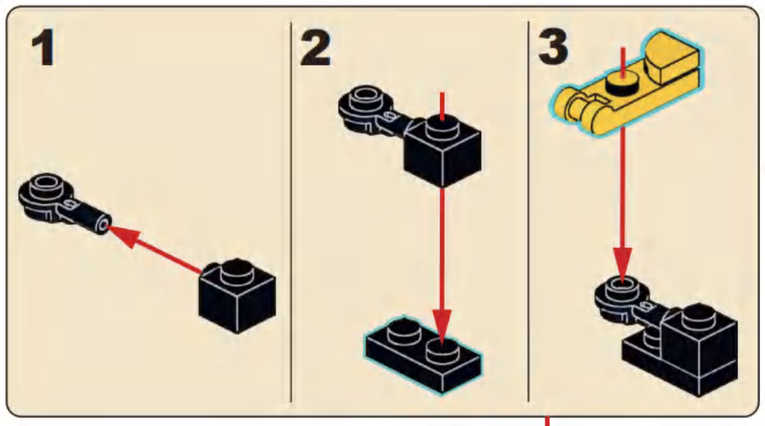

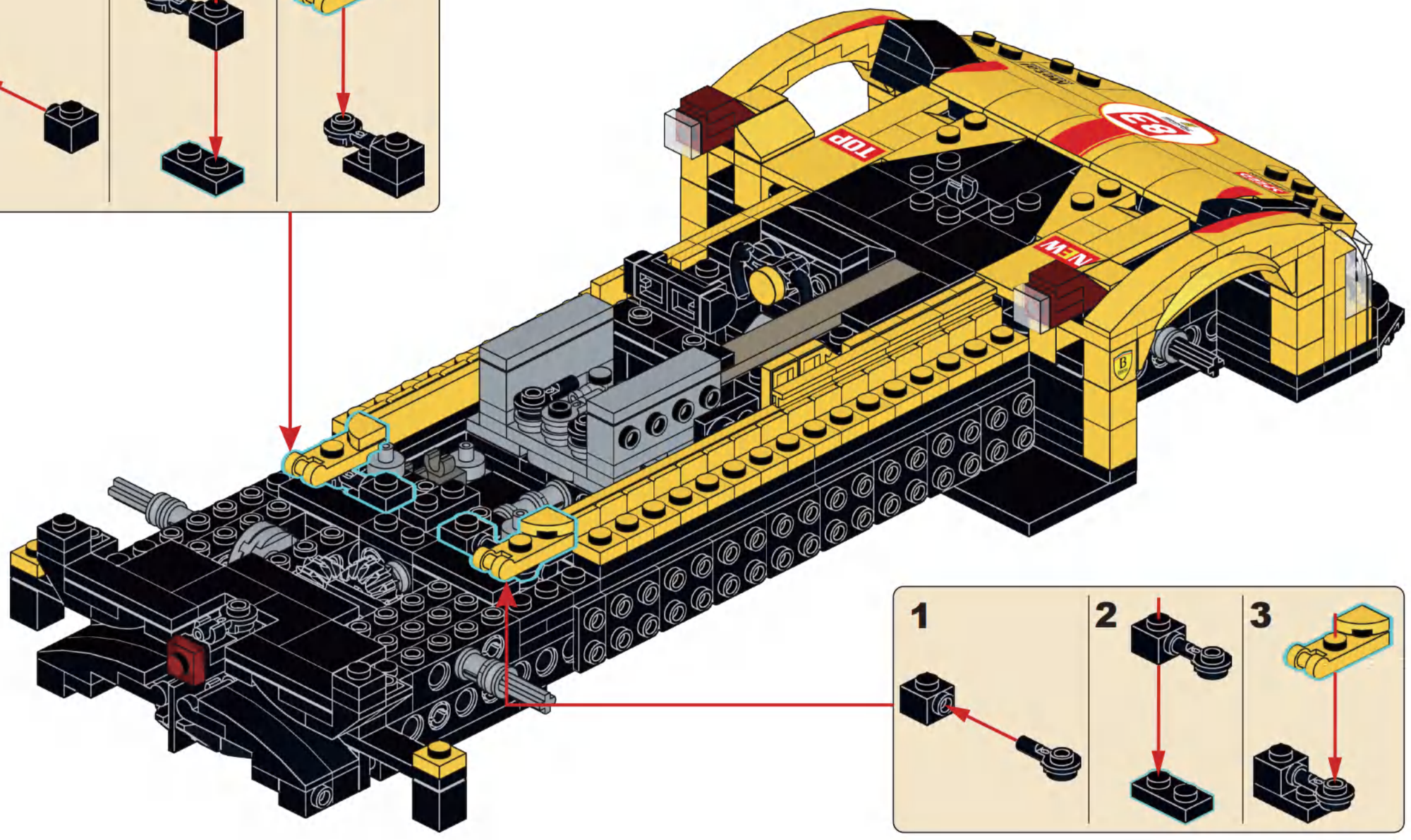

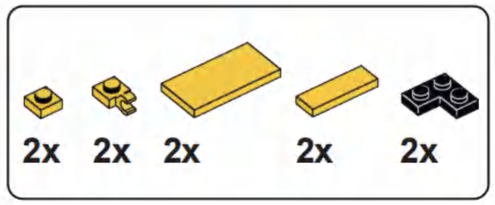

C12

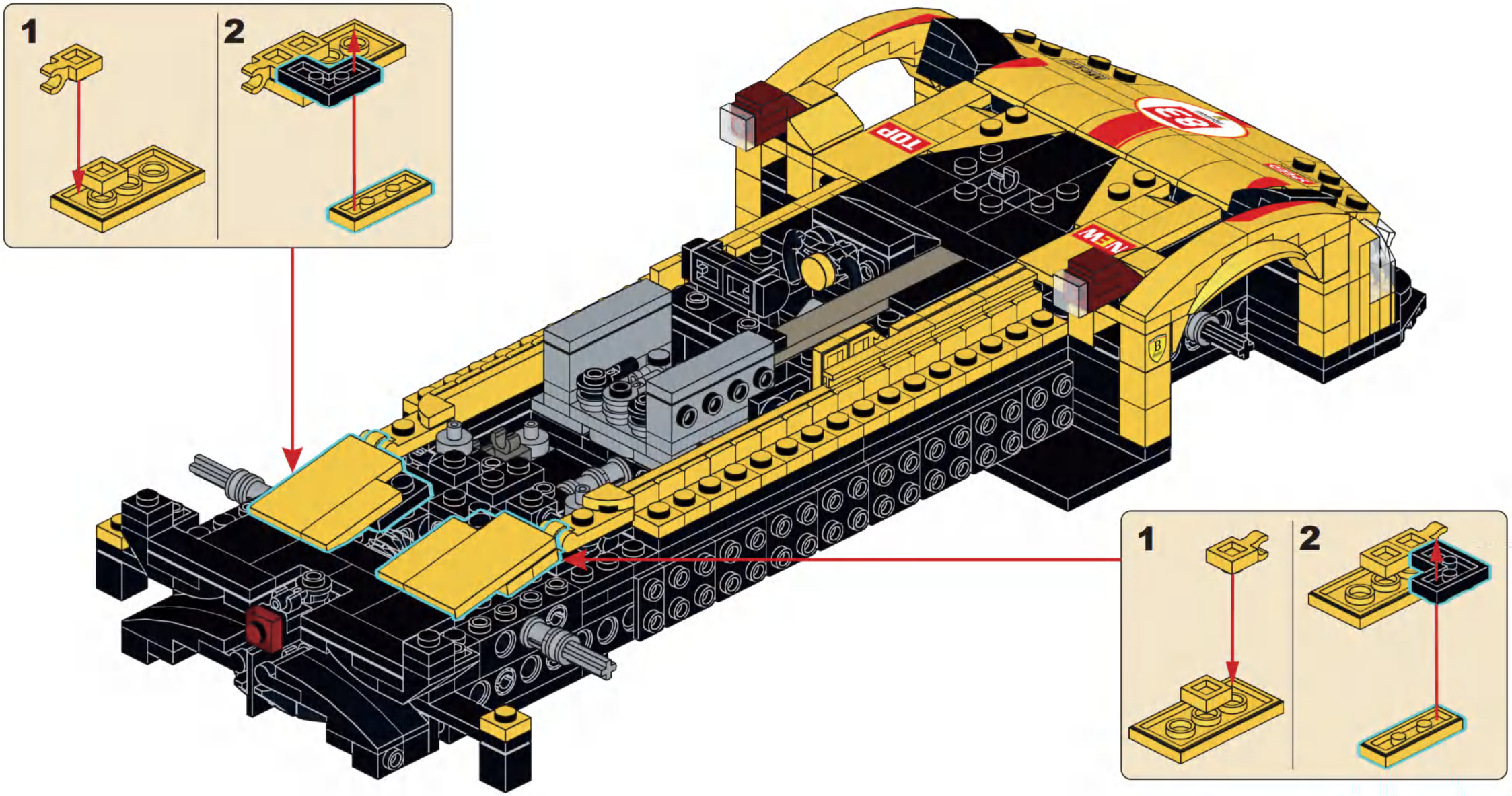

C13

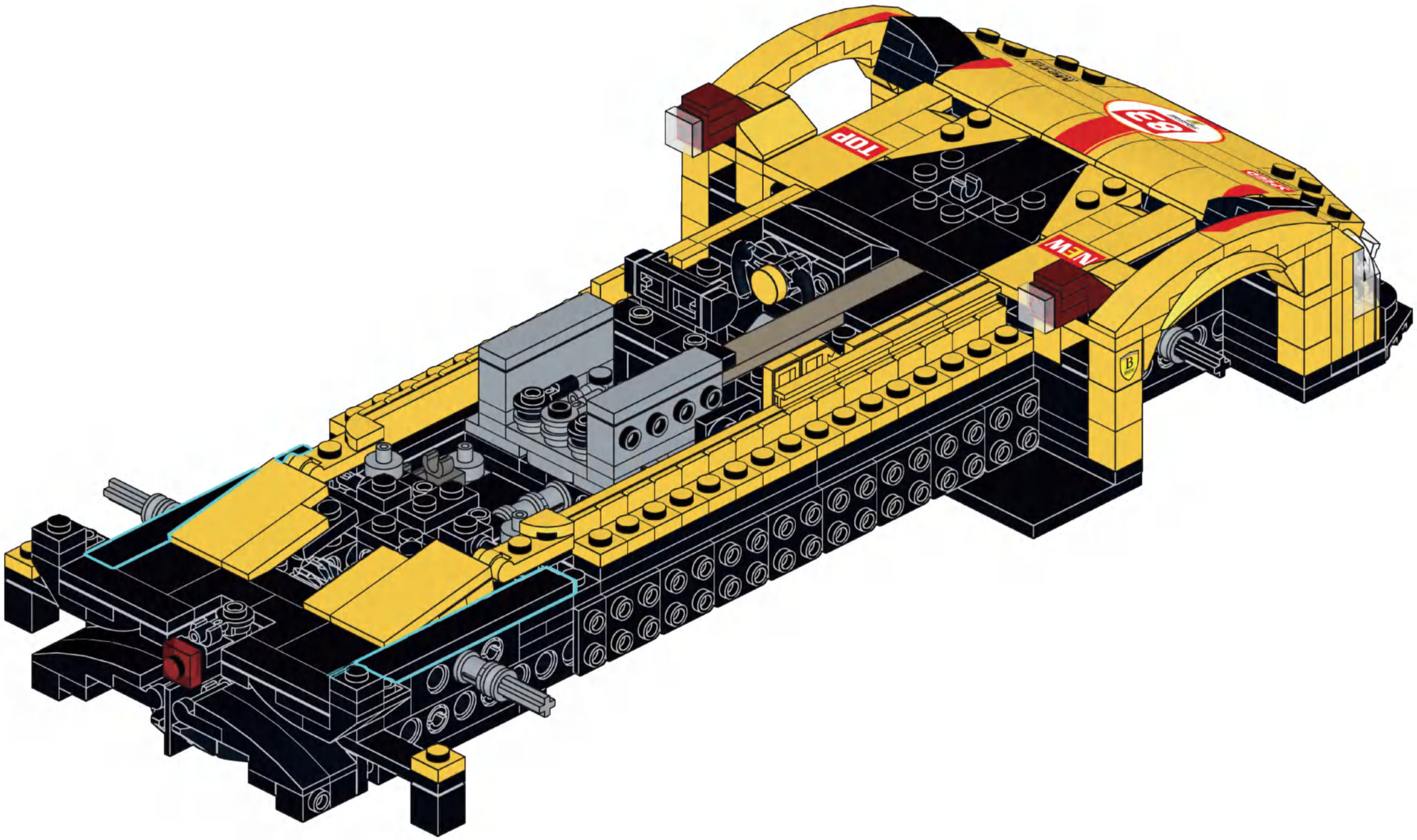

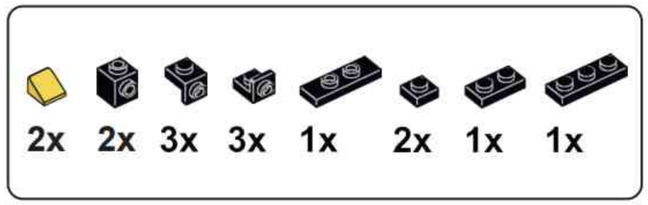

C14

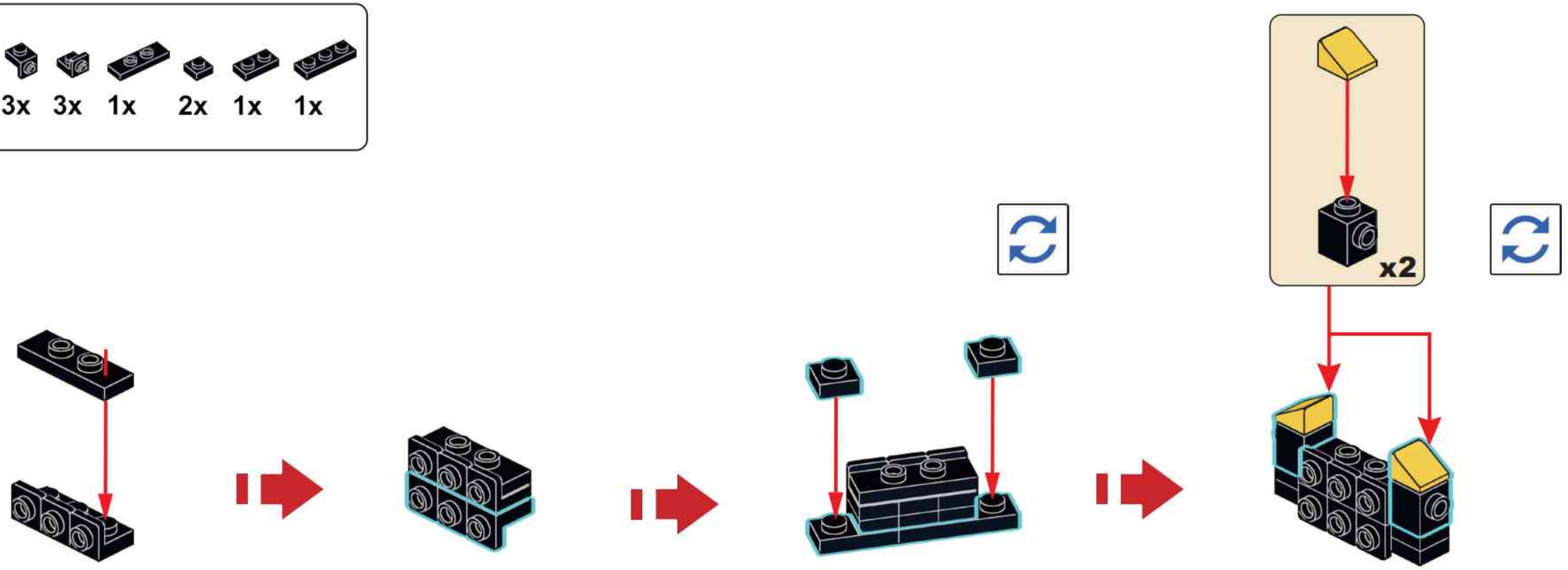

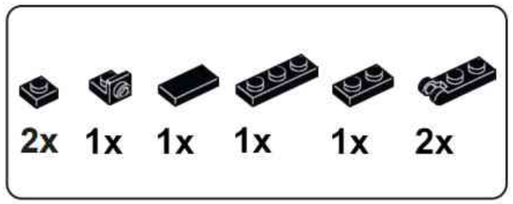

C15

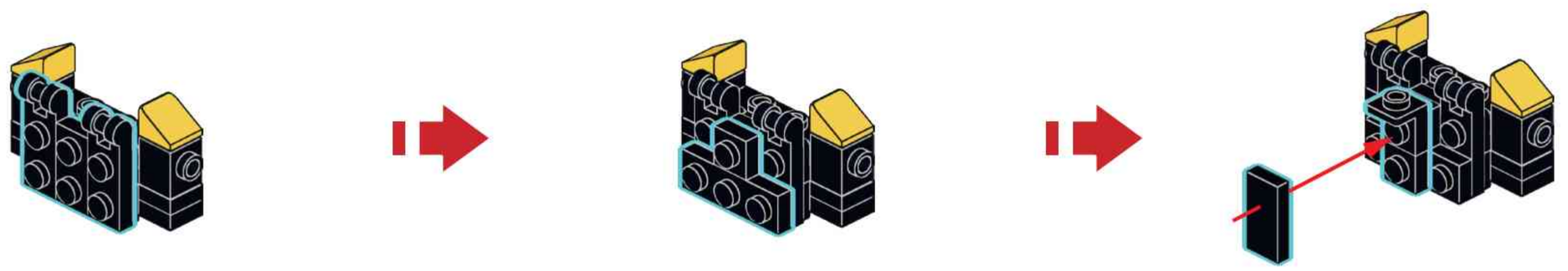

C16

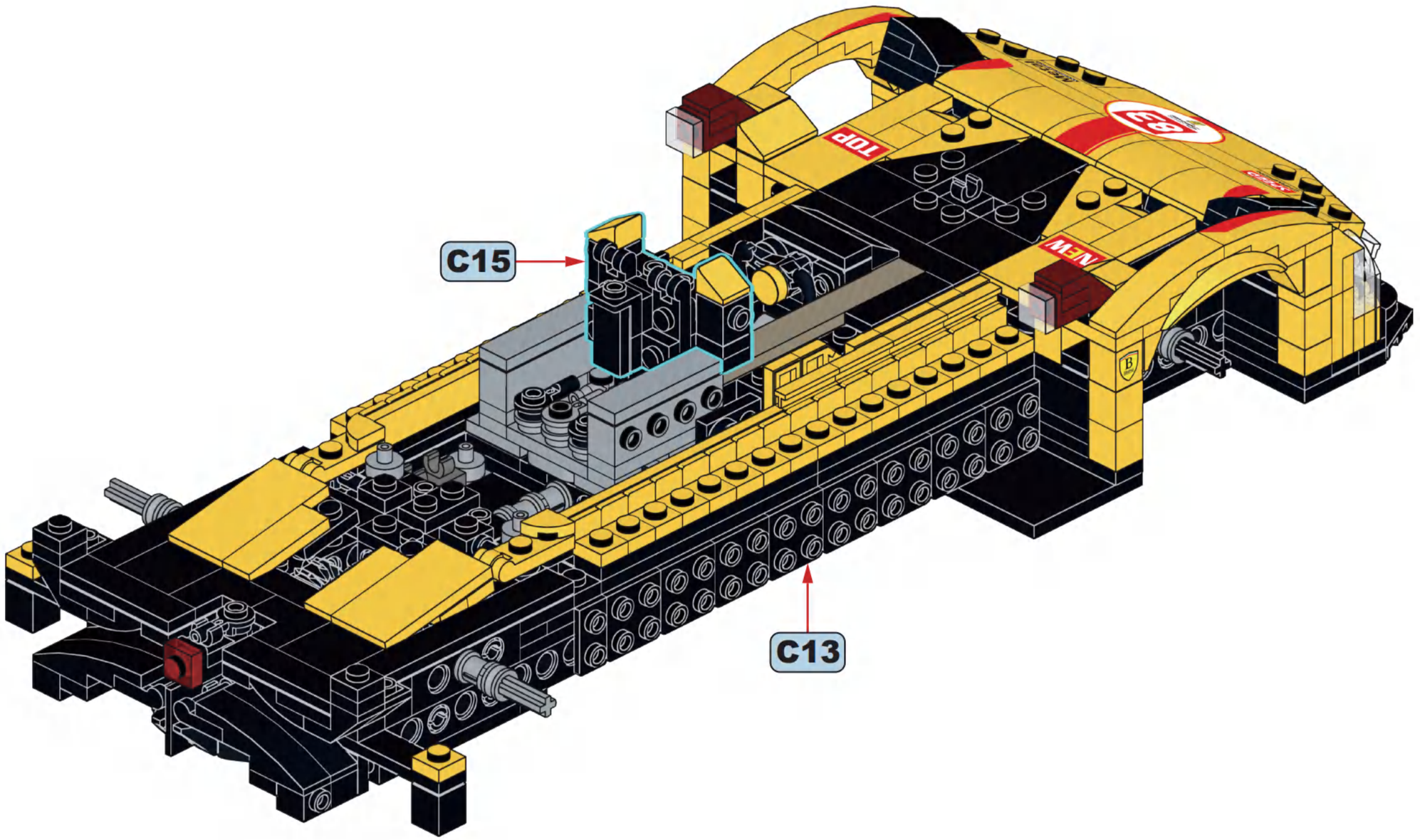

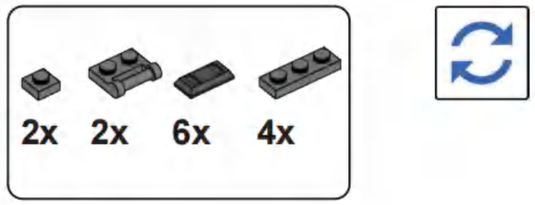

C17

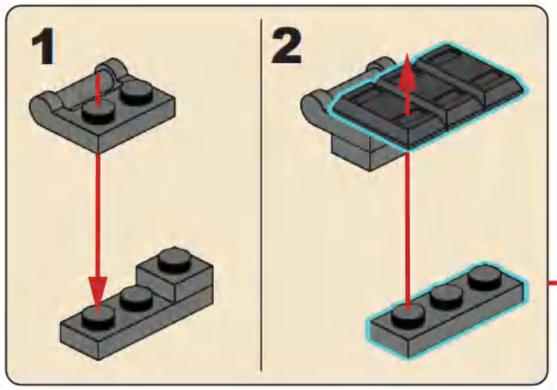

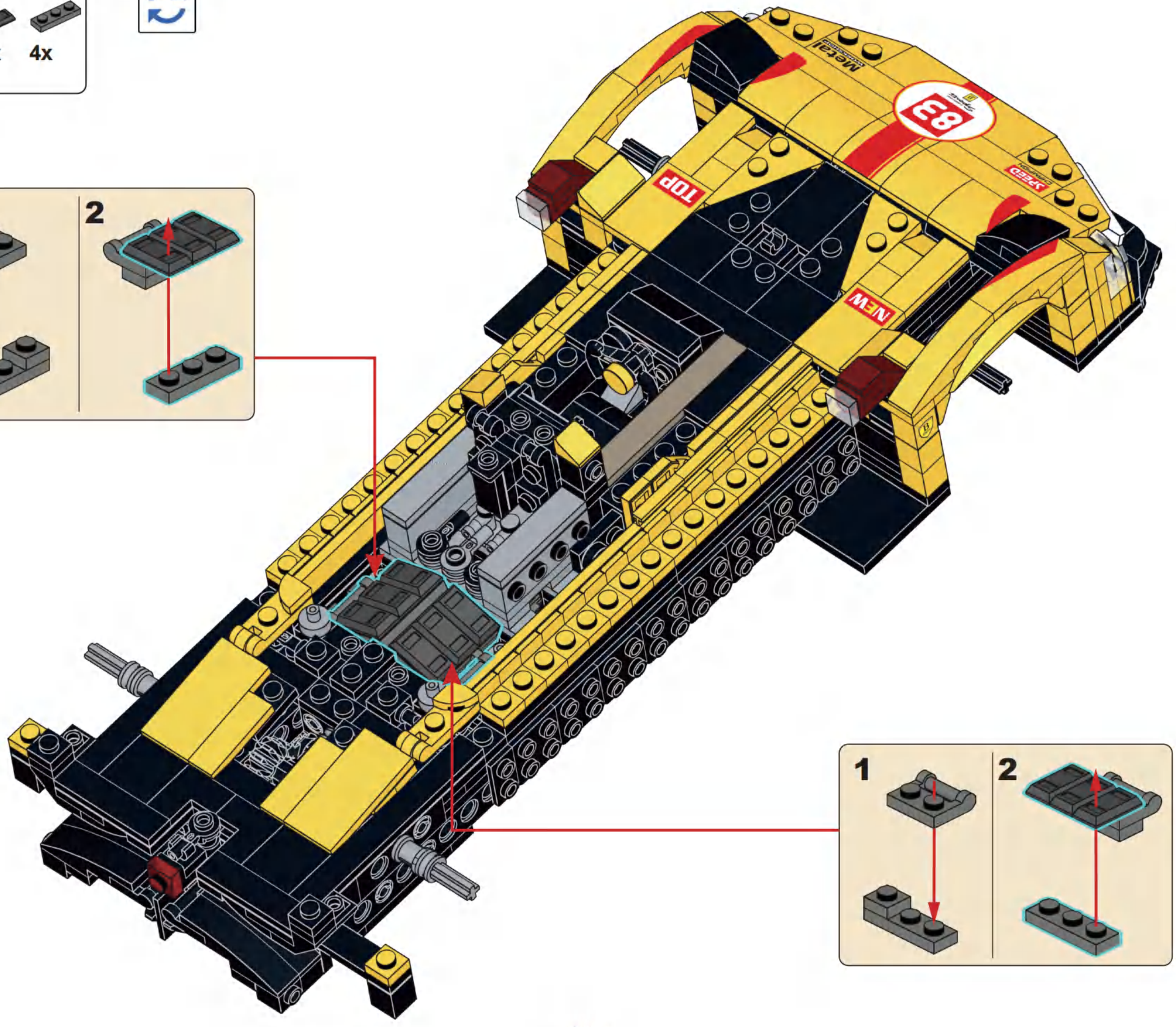

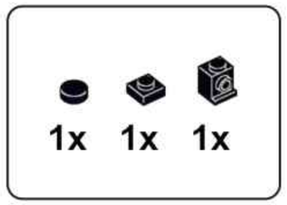

C18

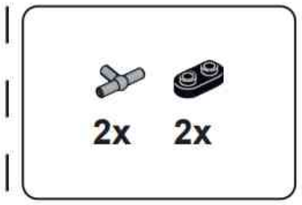

C19

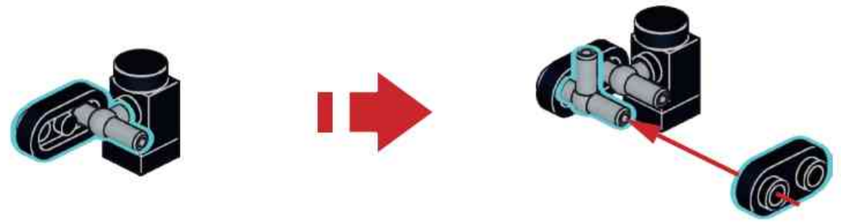

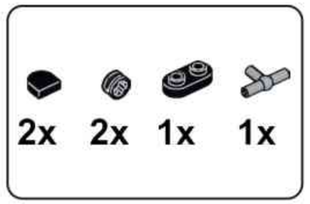

C20

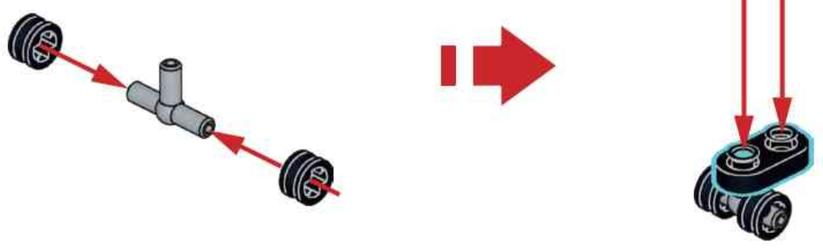

C21

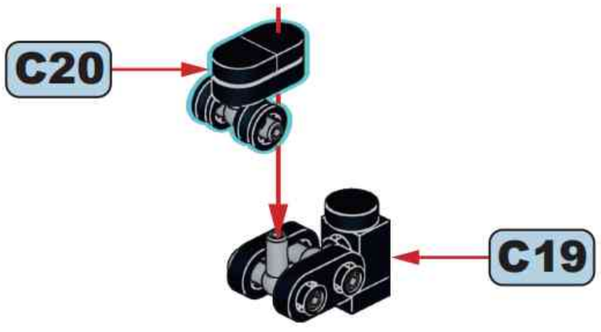

C22

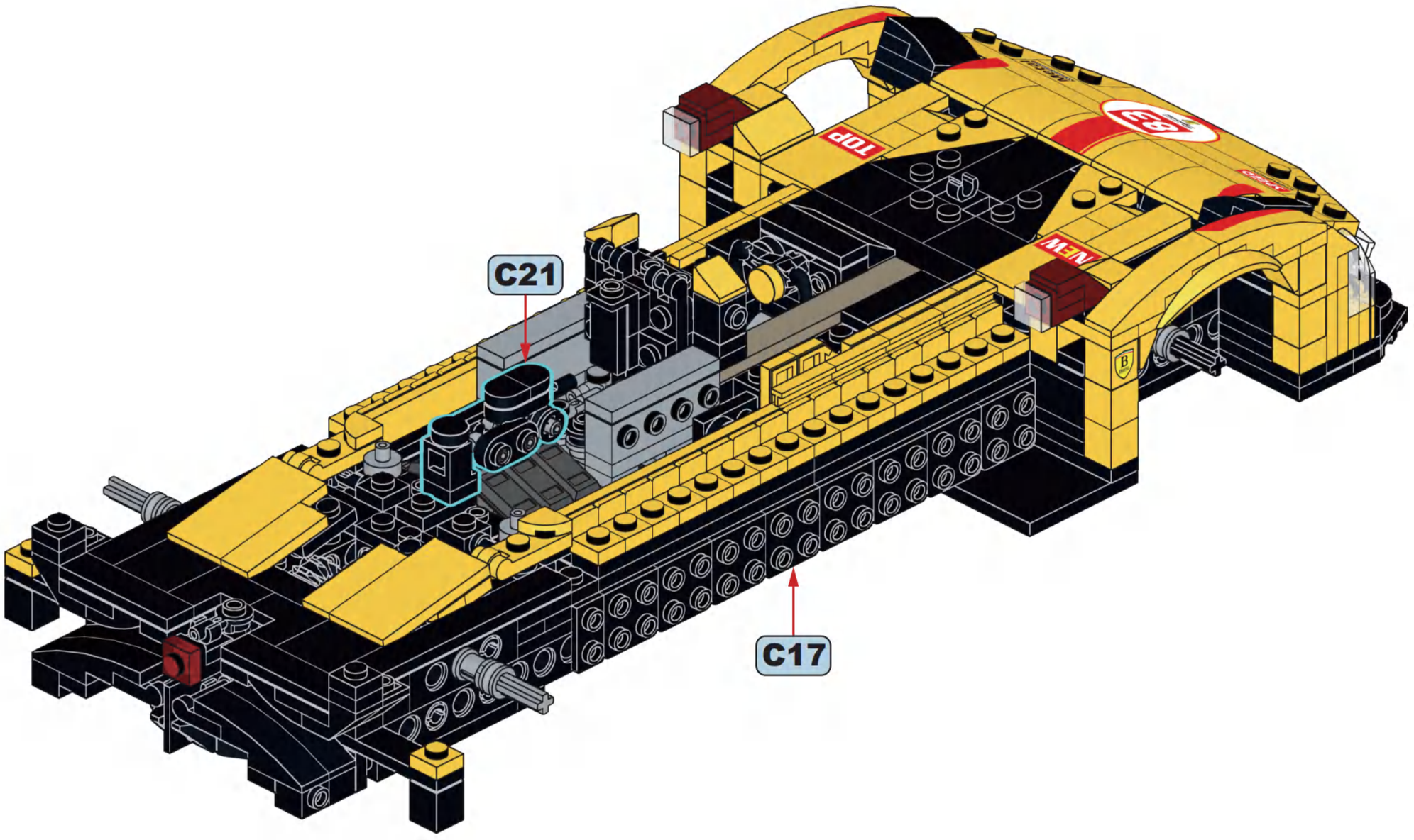

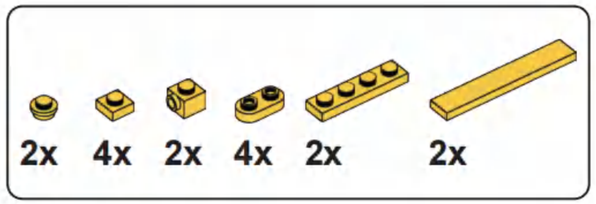

C23

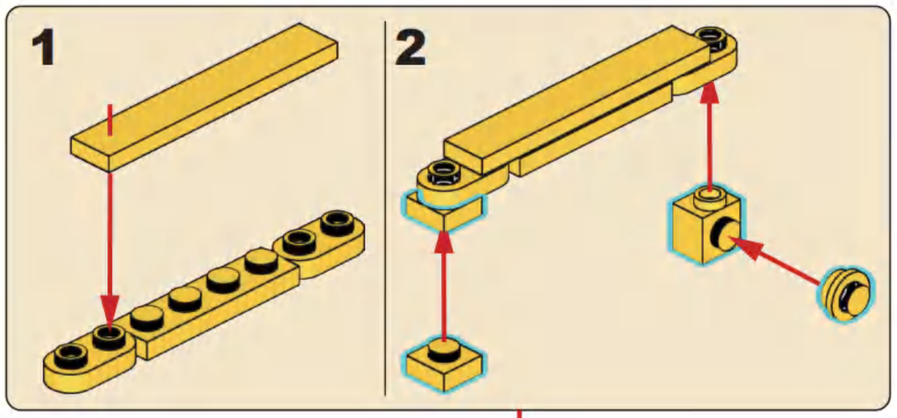

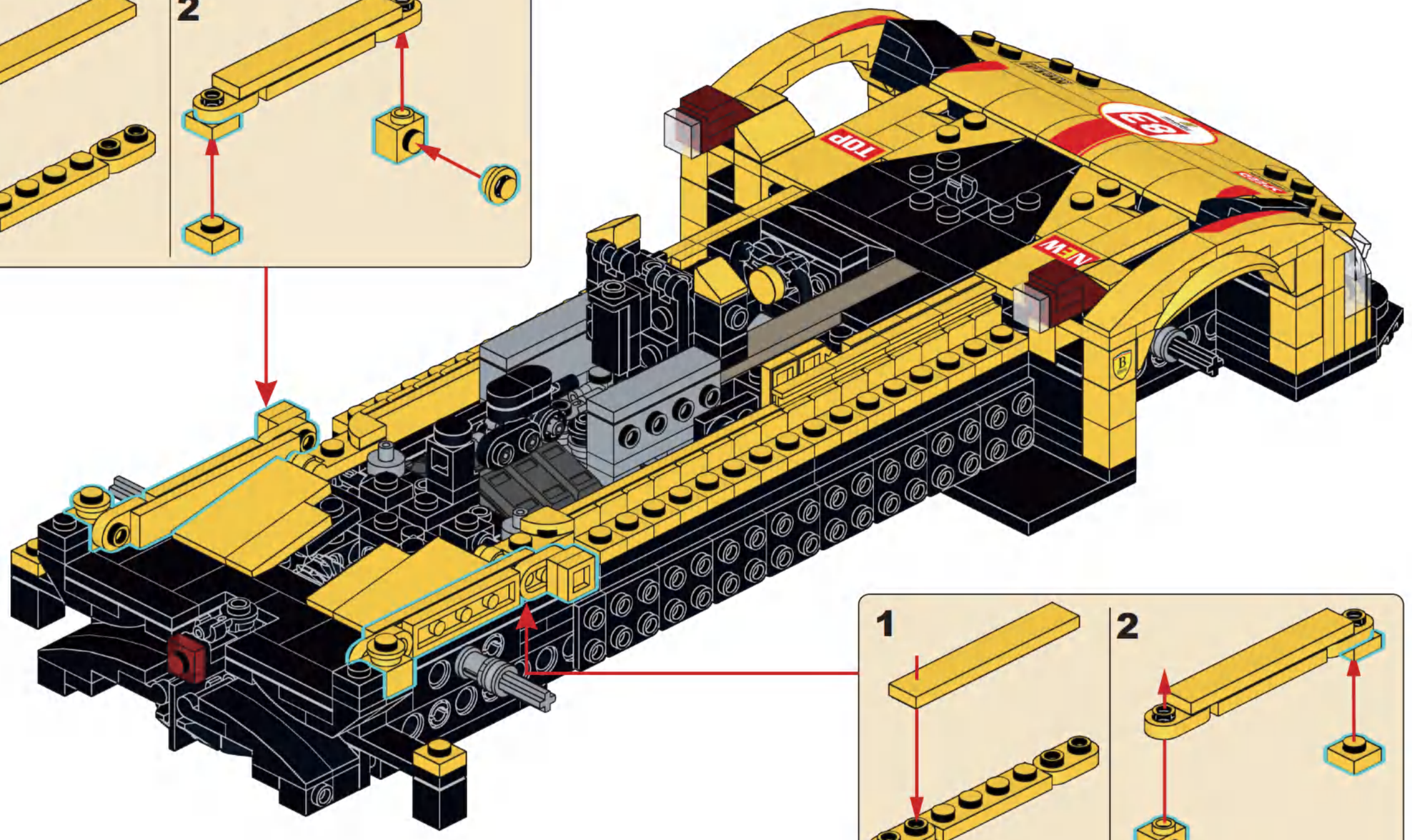

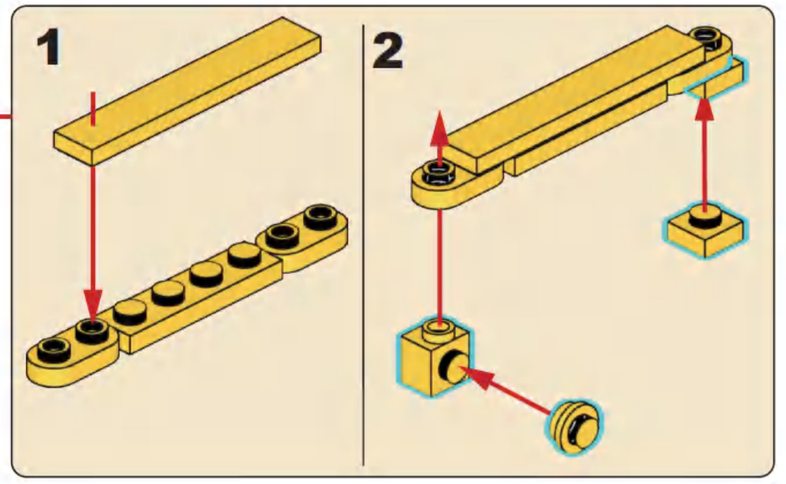

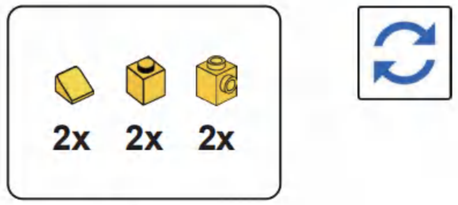

C24

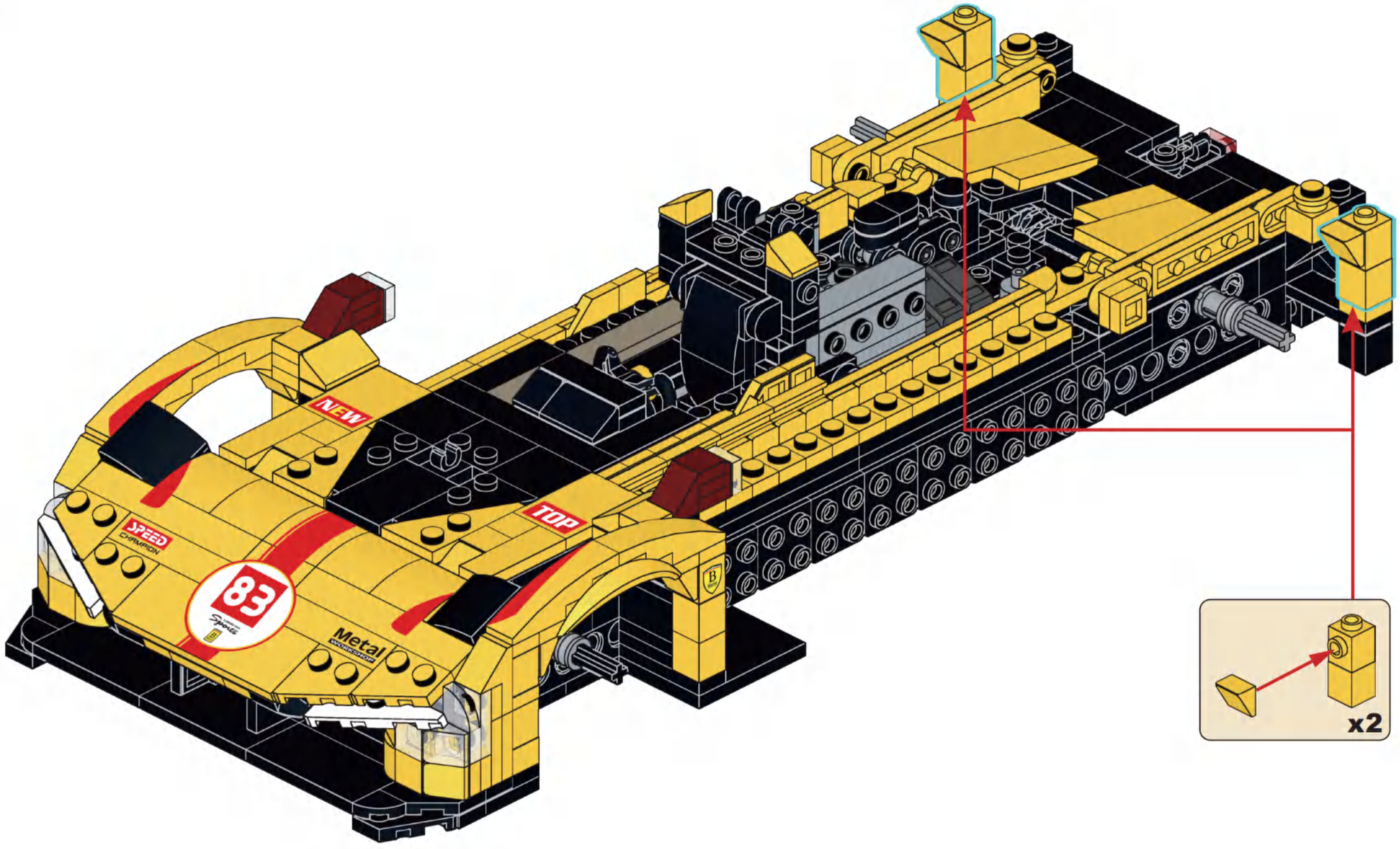

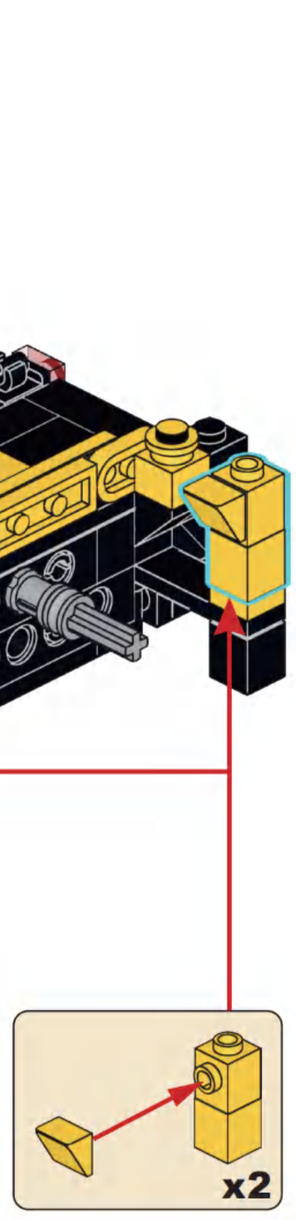

4

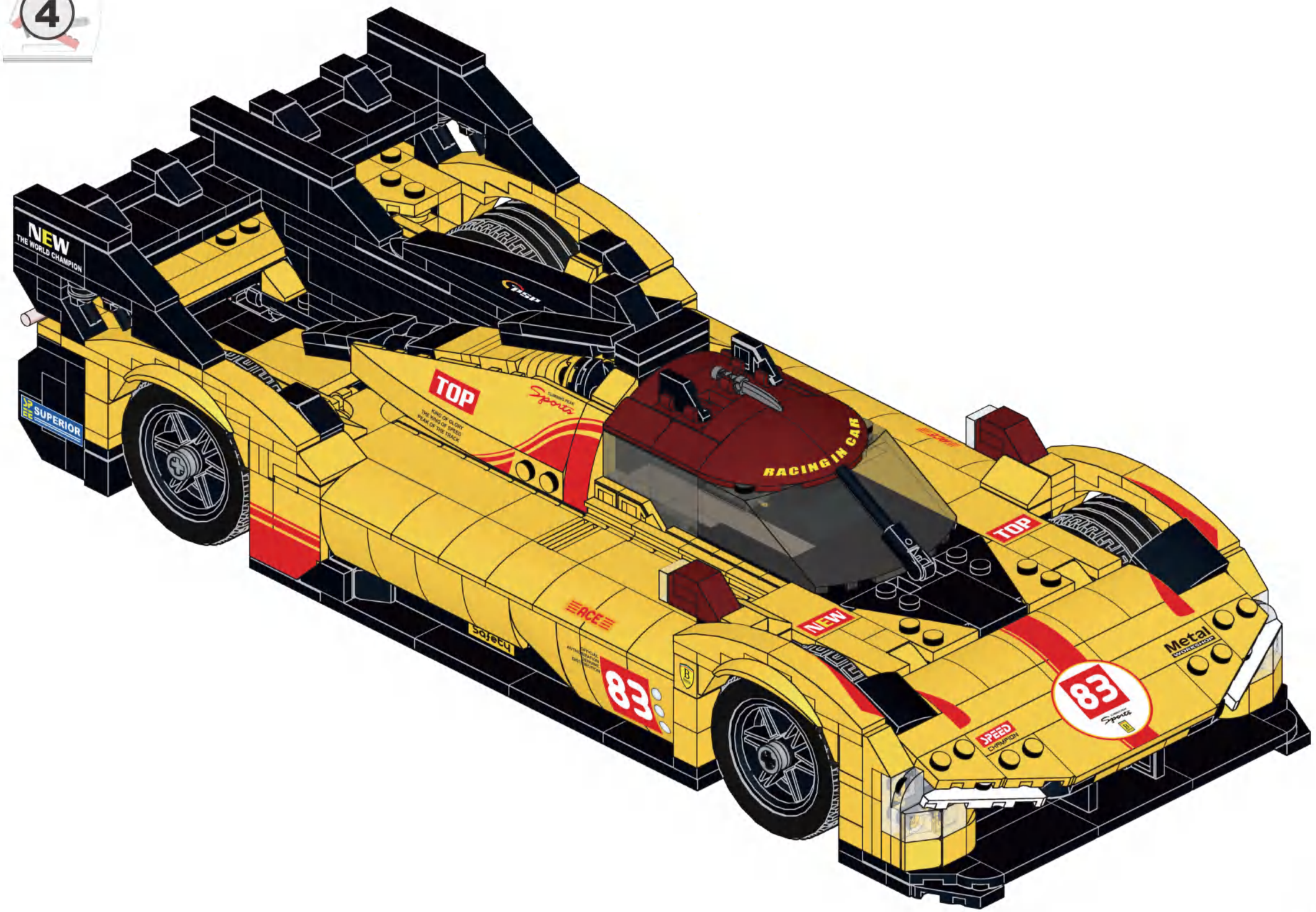
NEW
THE WORLD CHAMPION
SUPERIOR
TOP
RACING IN CAR
TOP
NEW
Metal
83
83
SPEED
CHAMPION
Safety
ACE

D

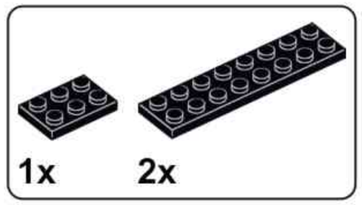

D1

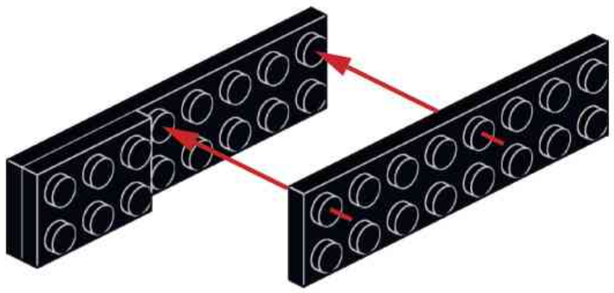

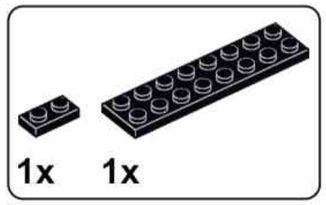

D2

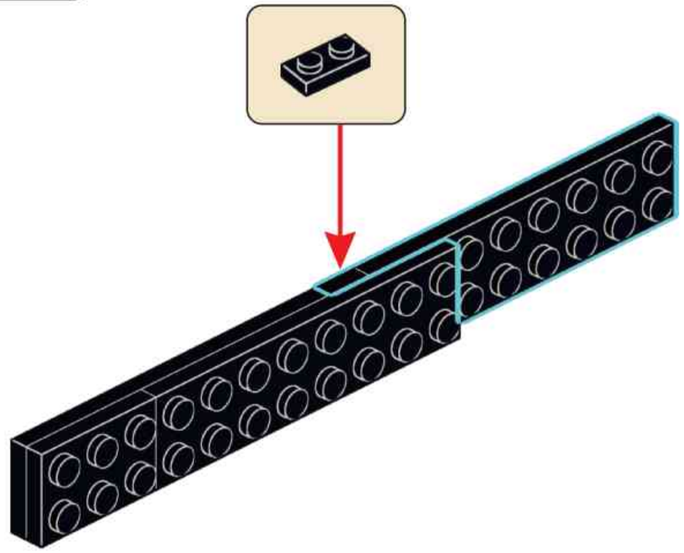

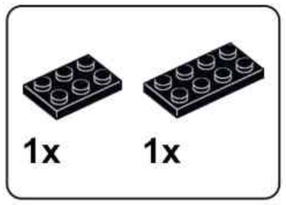

D3

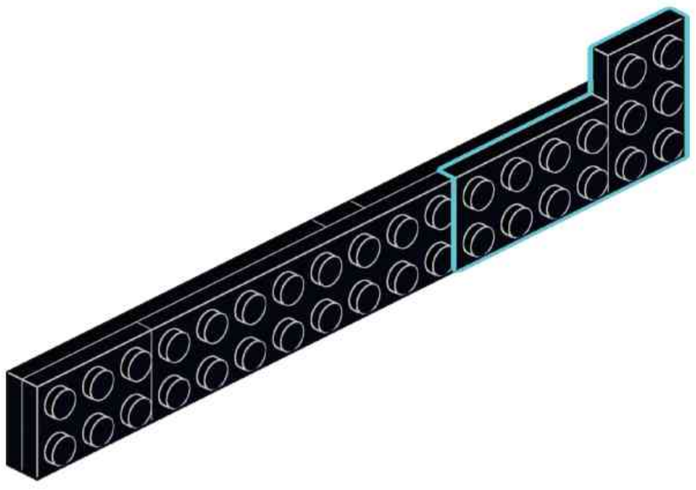

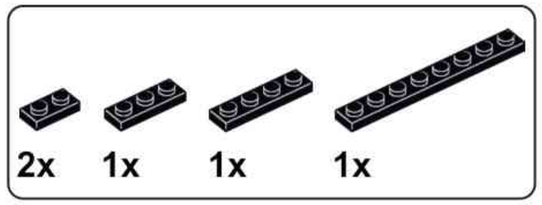

D4

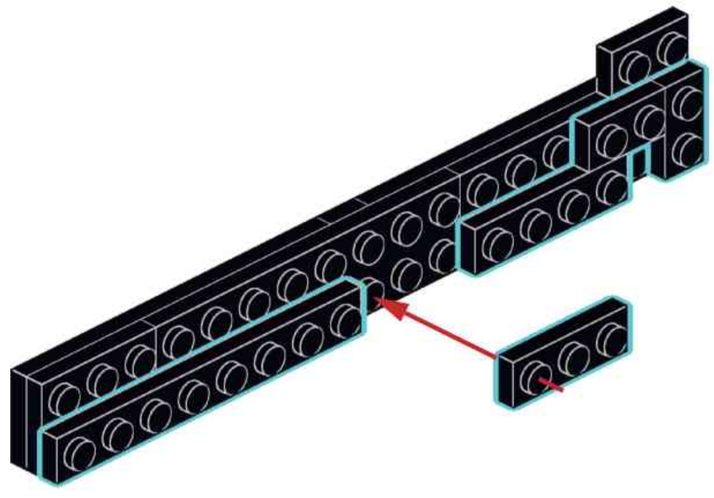

14x

D5

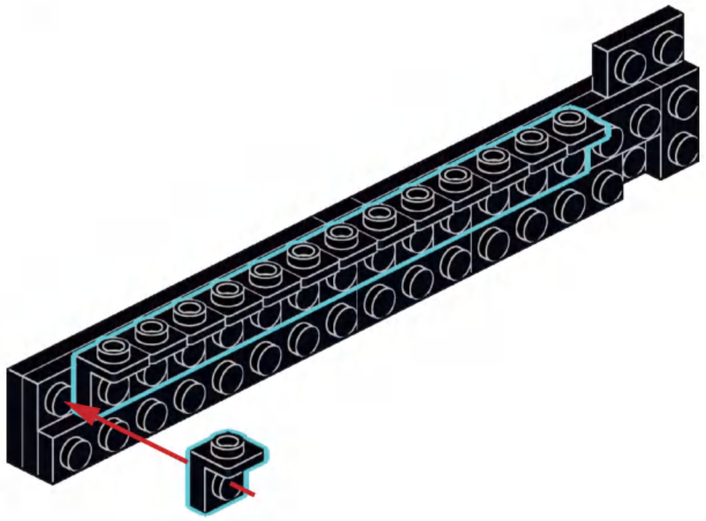

1x 1x 1x 1x 1x 1x

D6

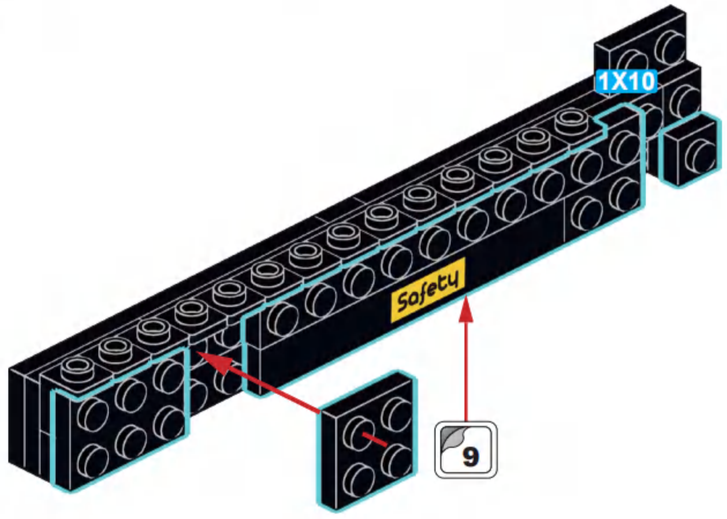

1x 2x 1x

D7

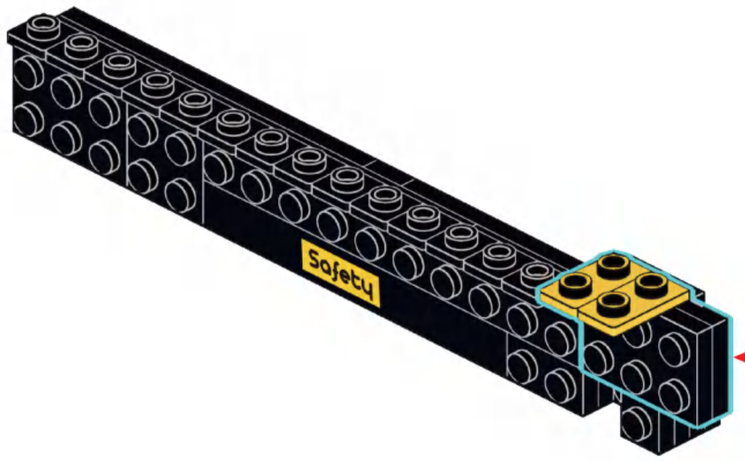

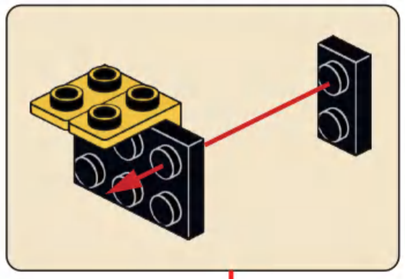

1x 1x 1x 1x

D8

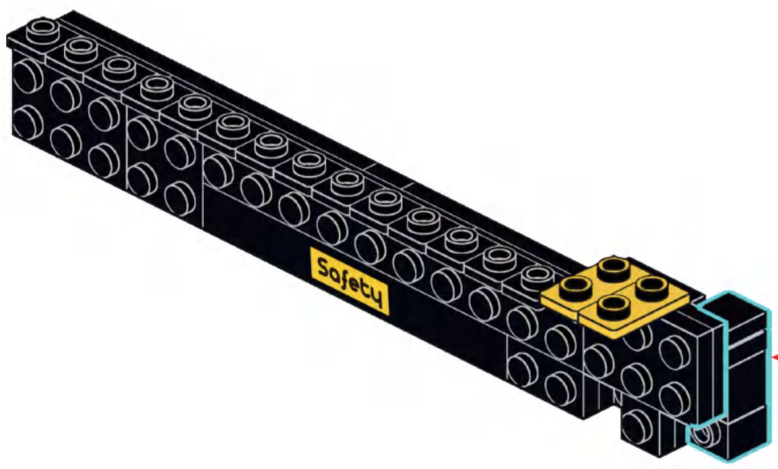

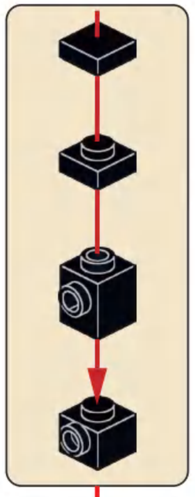

2x

D9

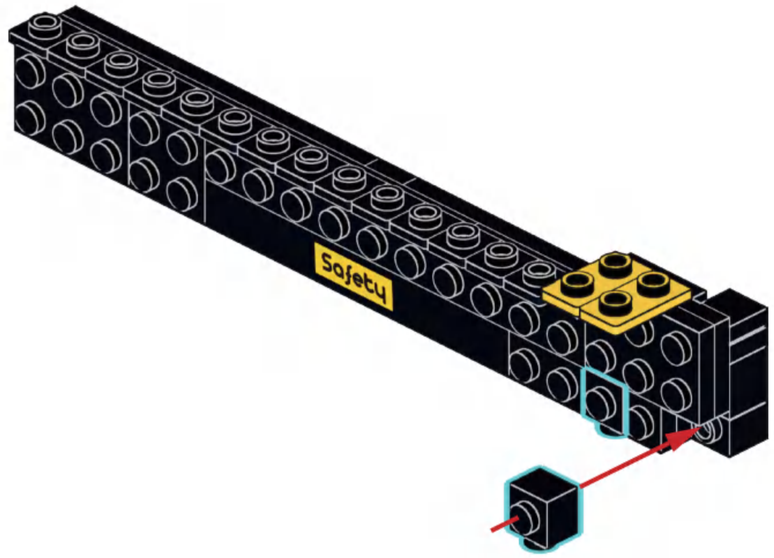

1x 1x 1x 1x

1X10

D10

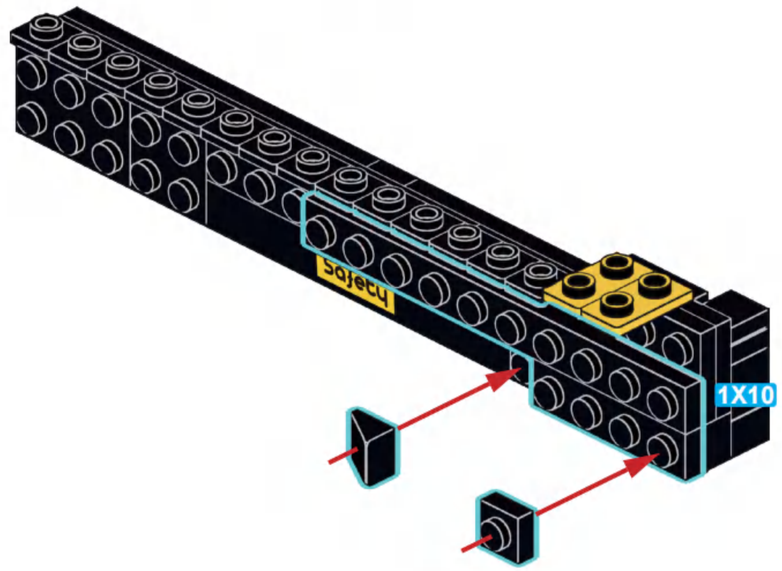

1x 1x 1x

D11

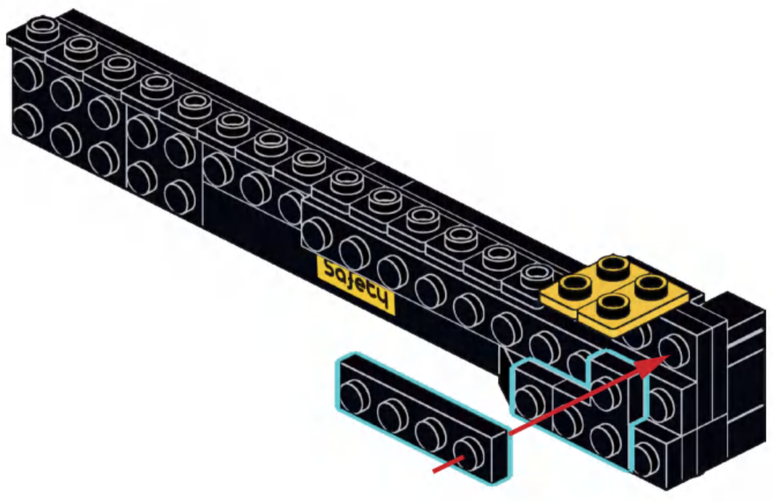

1x 1x 1x 1x

D12

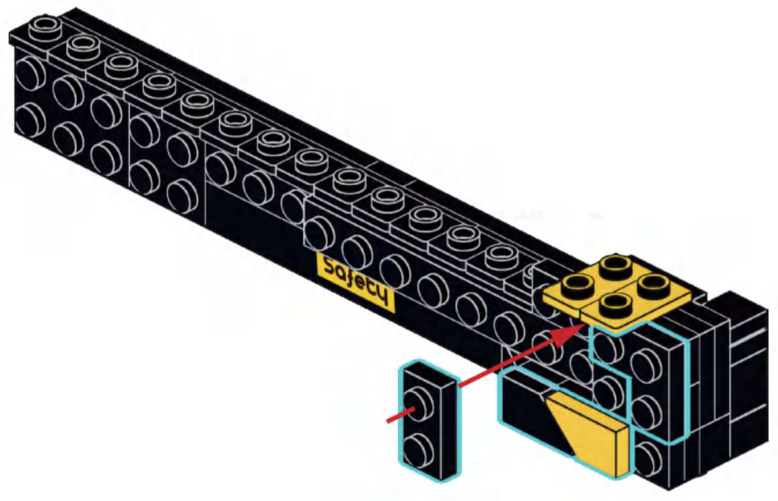

1x

D13

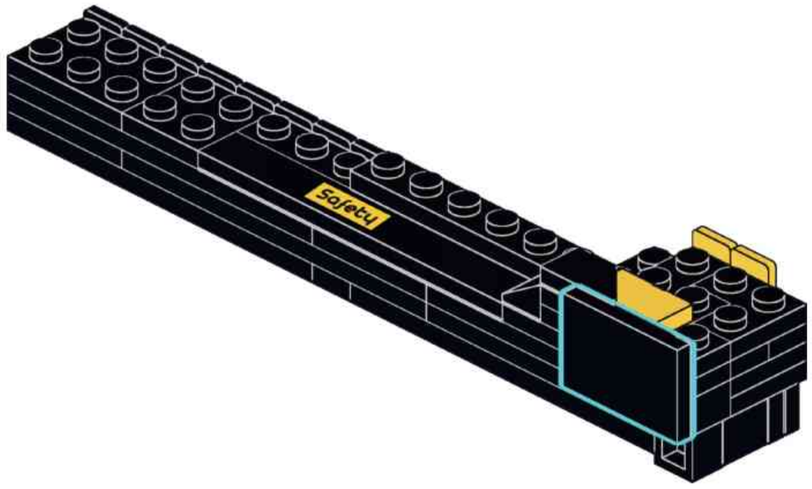

2x 1x 1x

D14

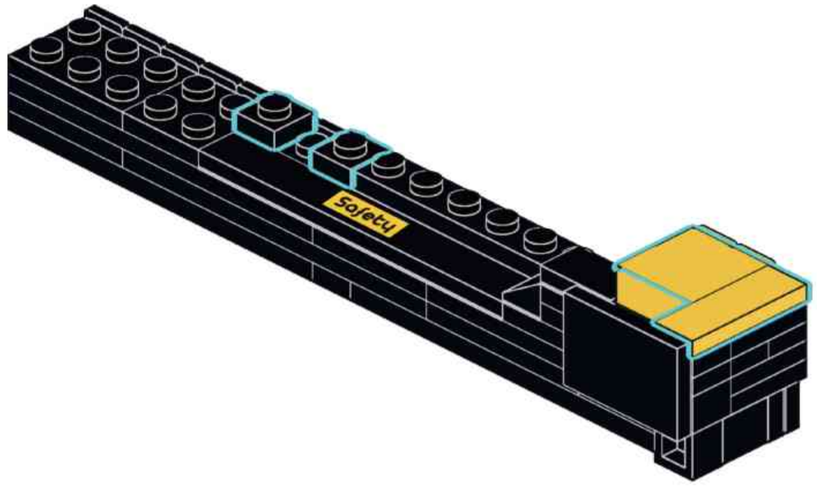

1x 2x 1x 2x 1x 1x 1x

D15

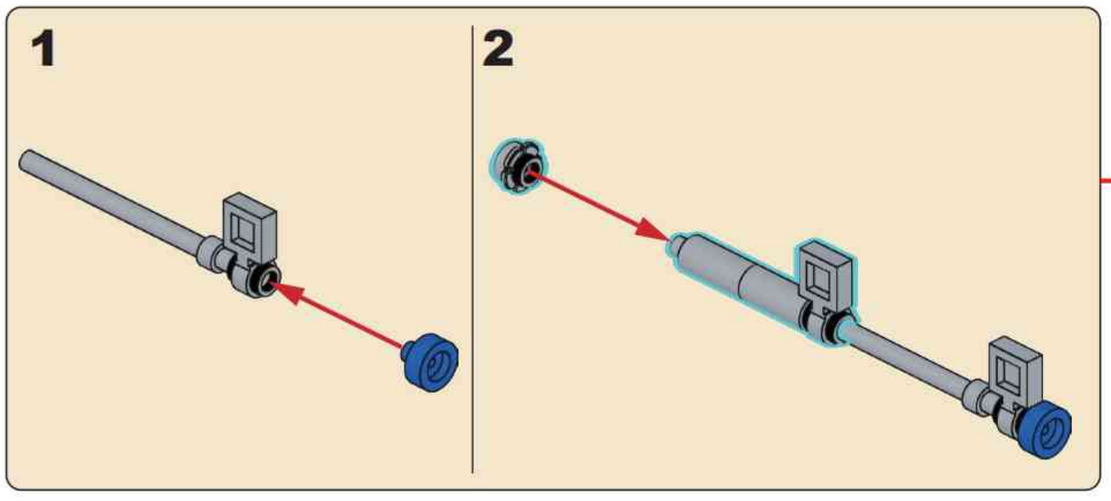

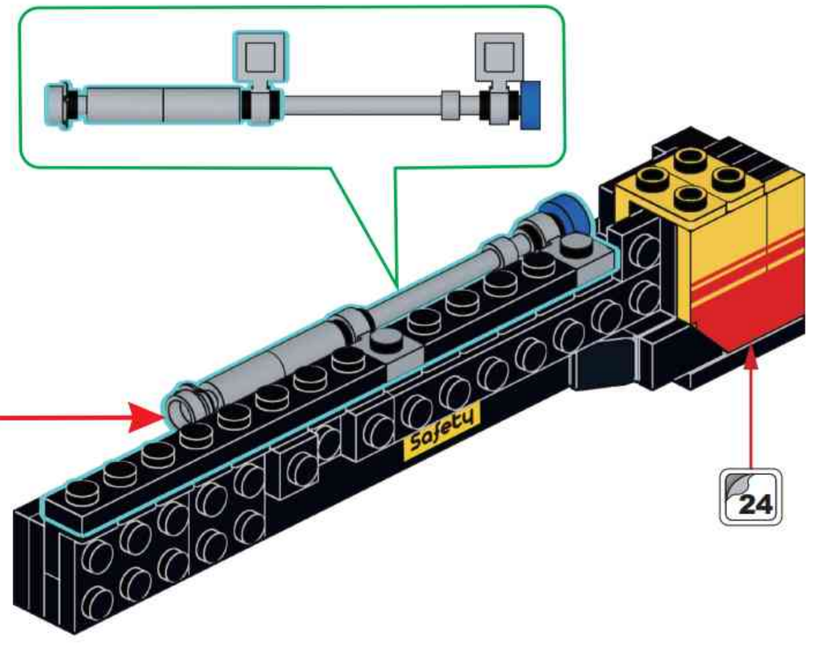

3x

D16

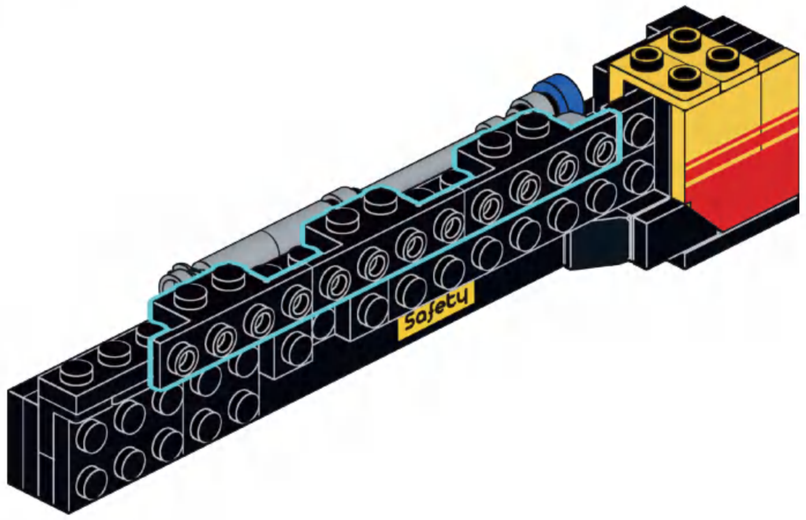

2x 2x 2x

D17

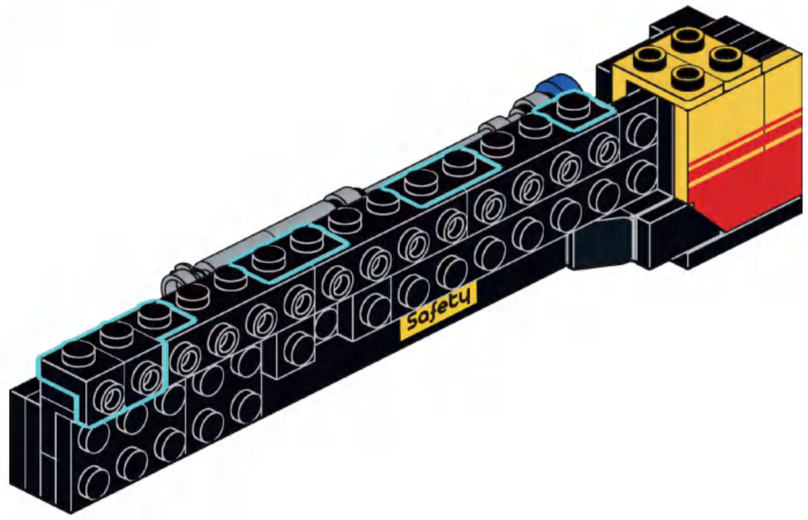

4x 1x 1x

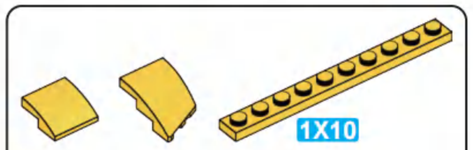

D18

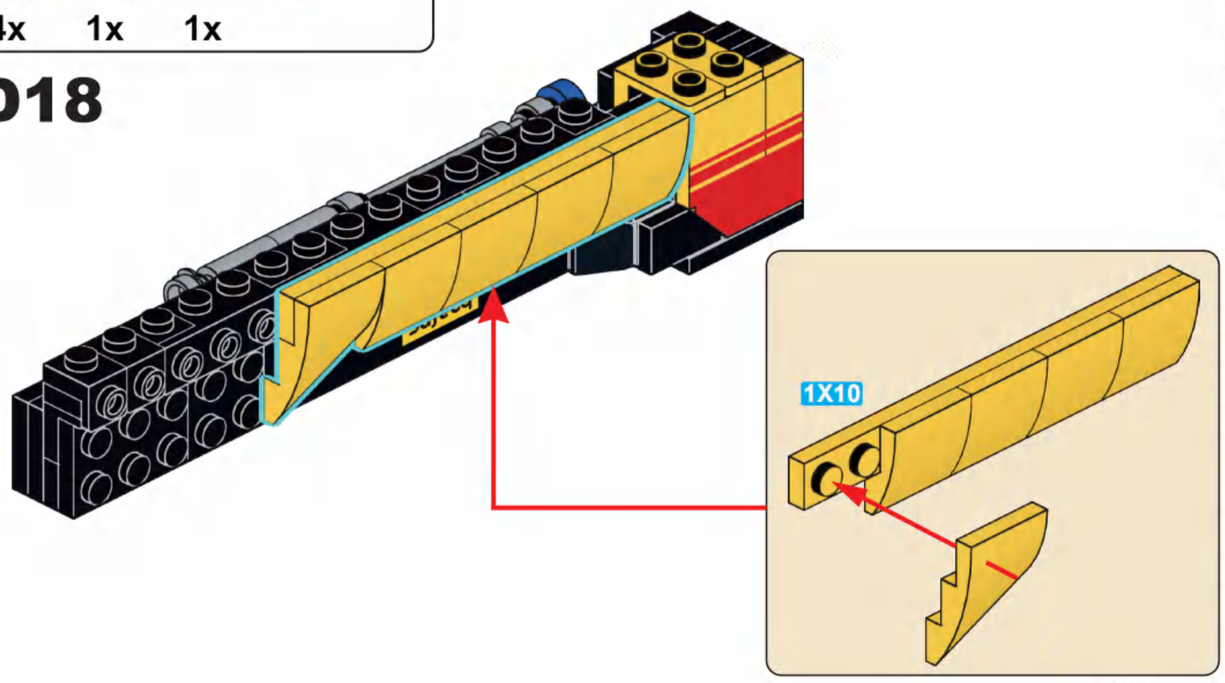

1x 2x

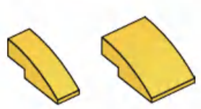

D19

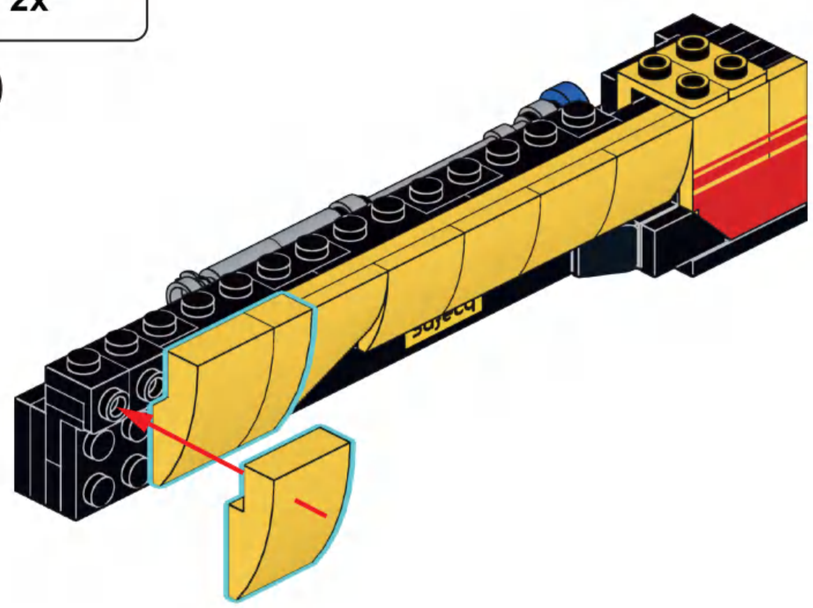

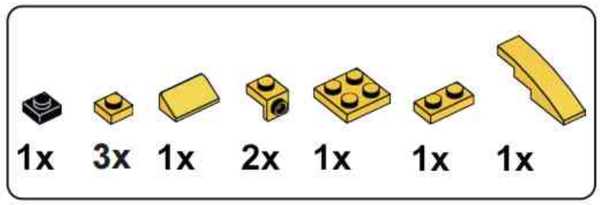

D20

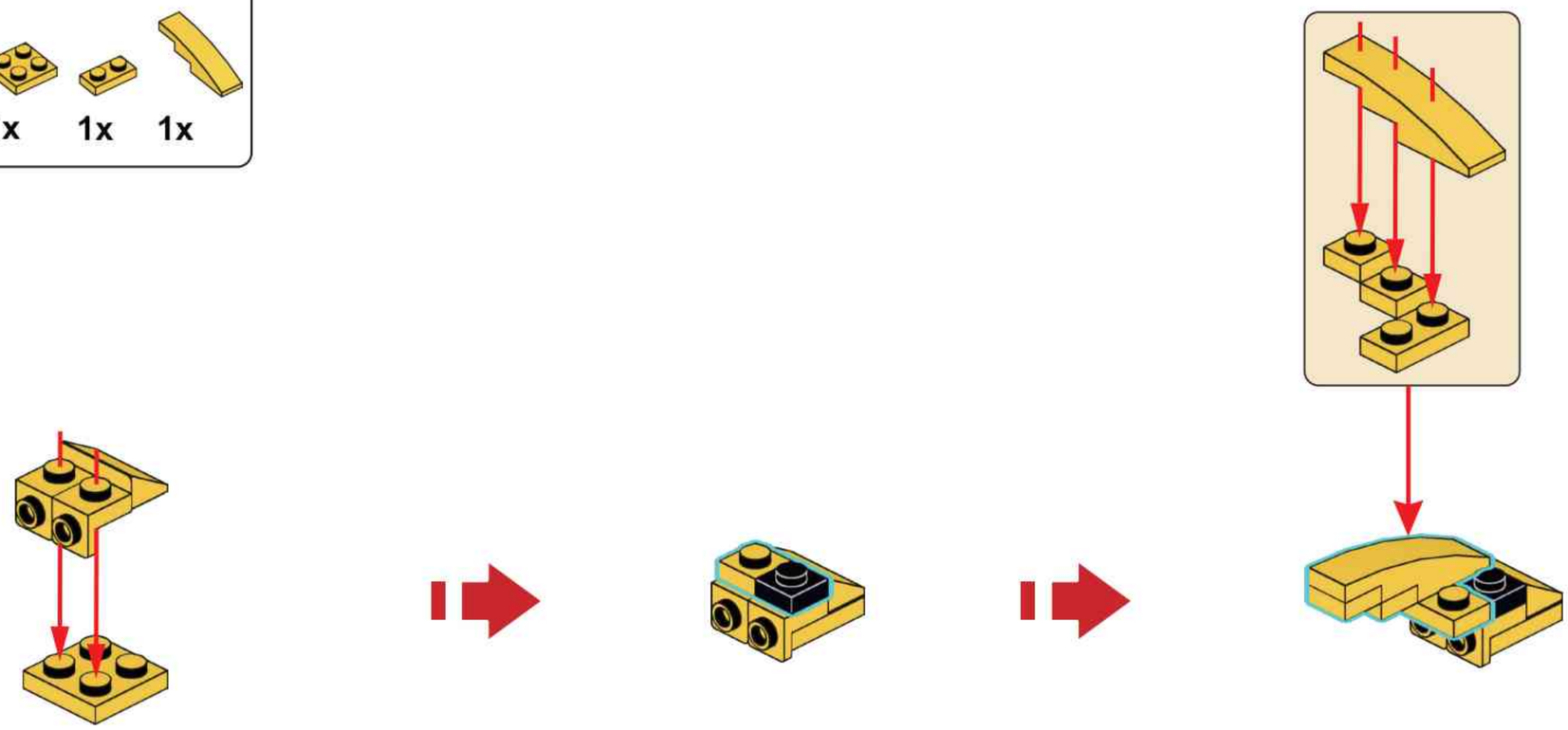

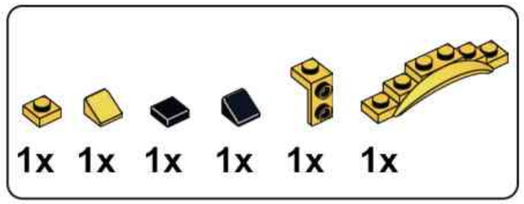

D21

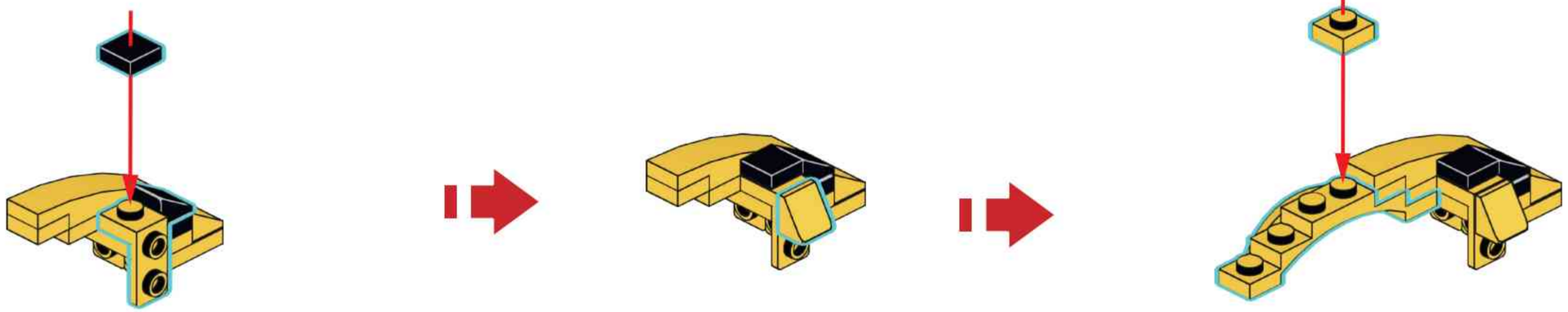

2x 1x

D22

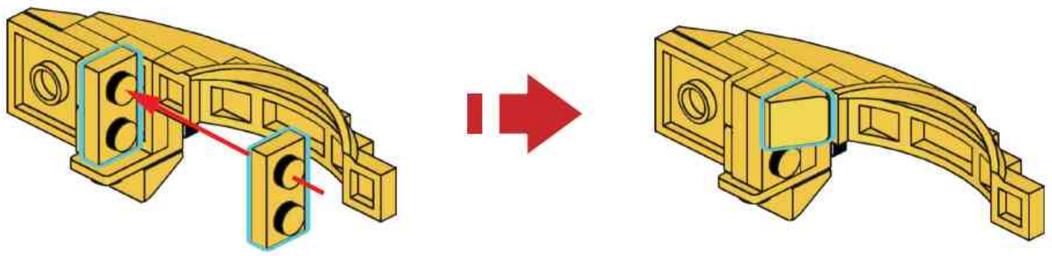

D23

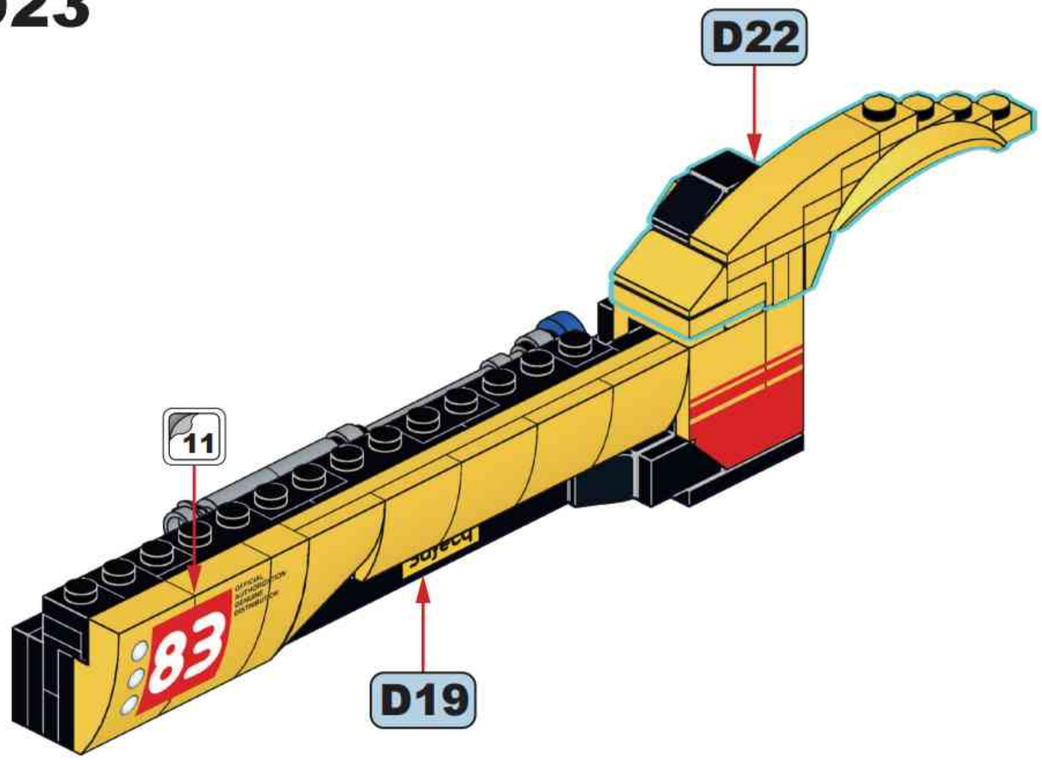

1x 2x

D24

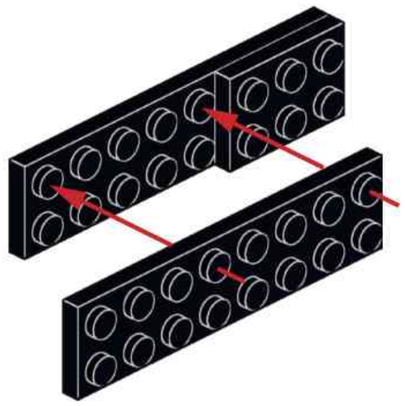

1x 1x

D25

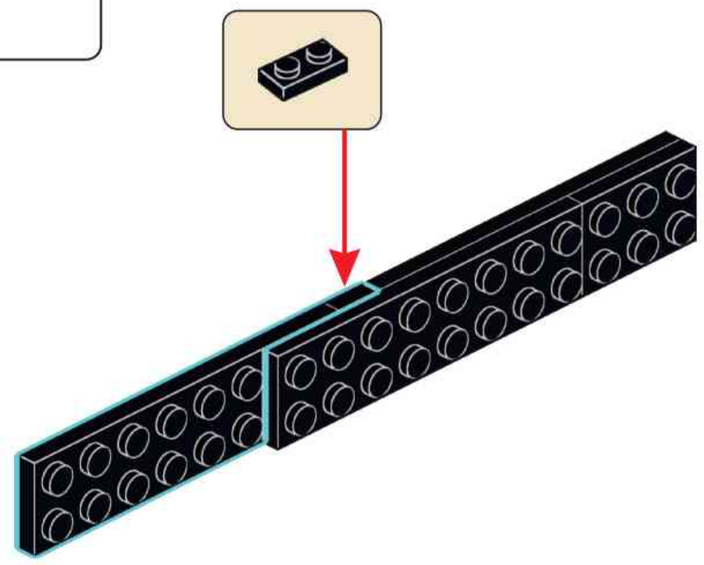

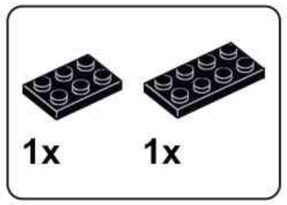

D26

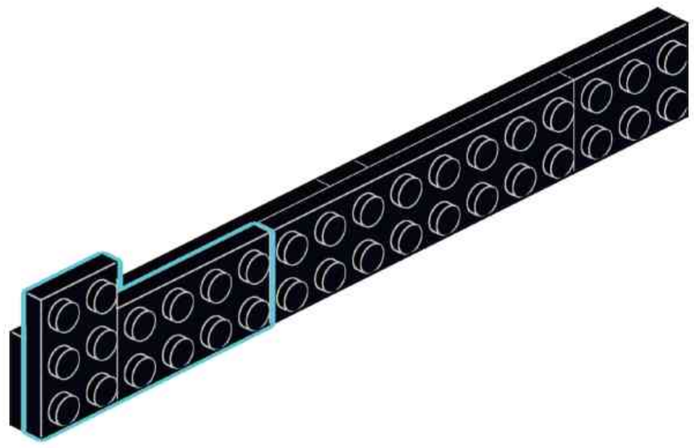

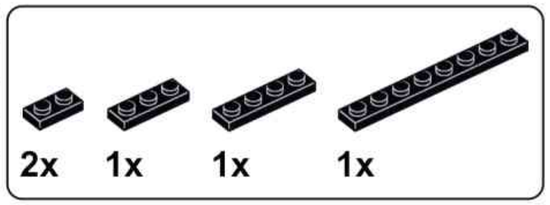

D27

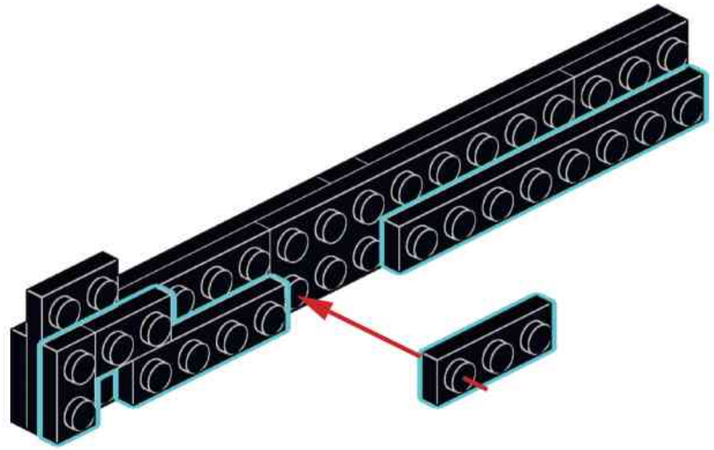

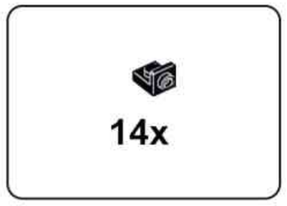

D28

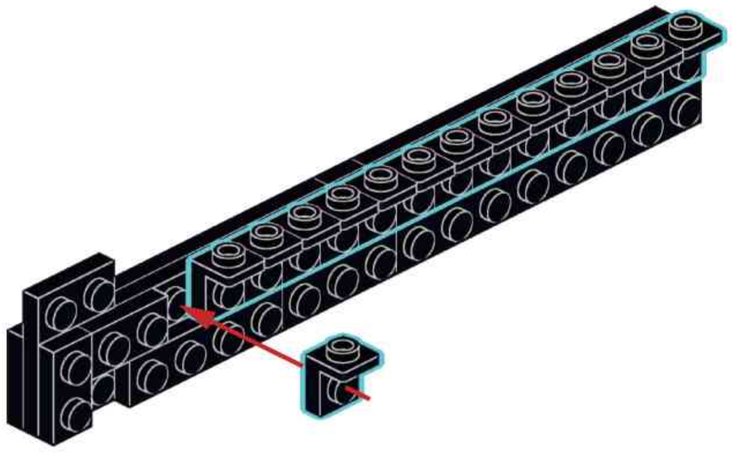

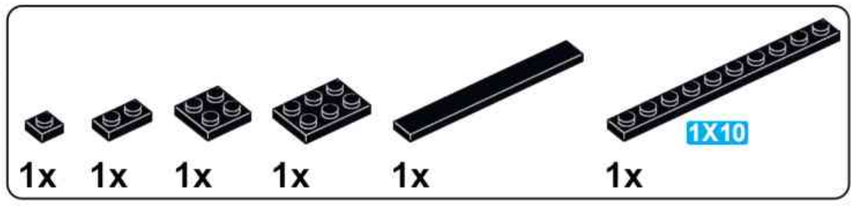

D29

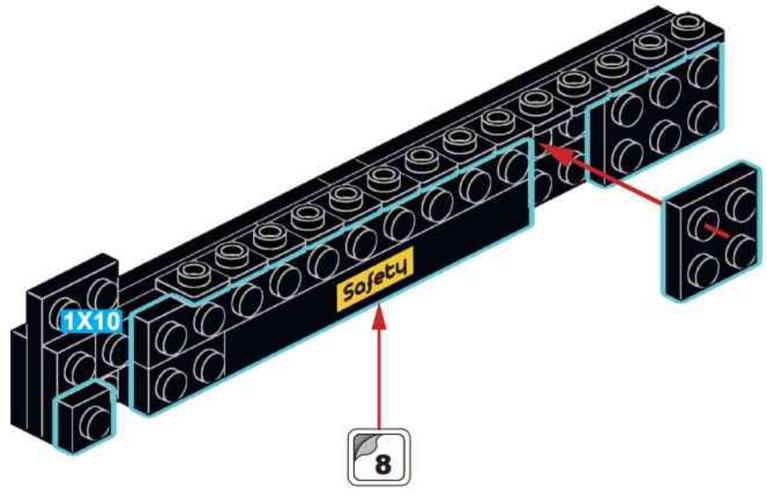

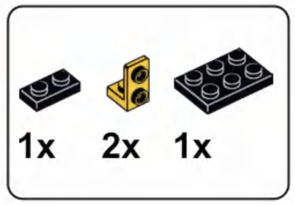

D30

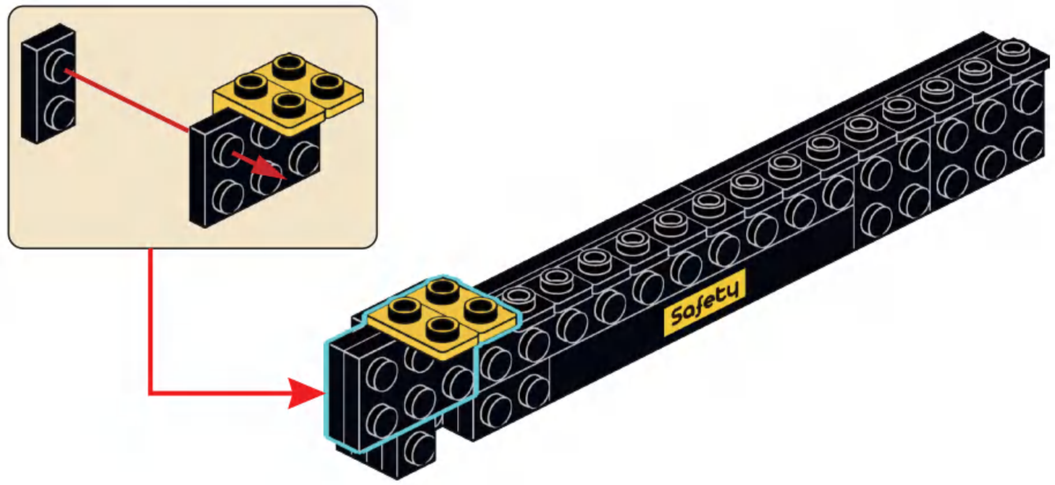

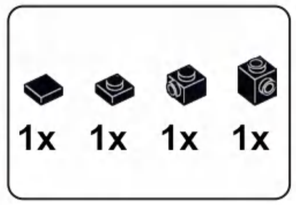

D31

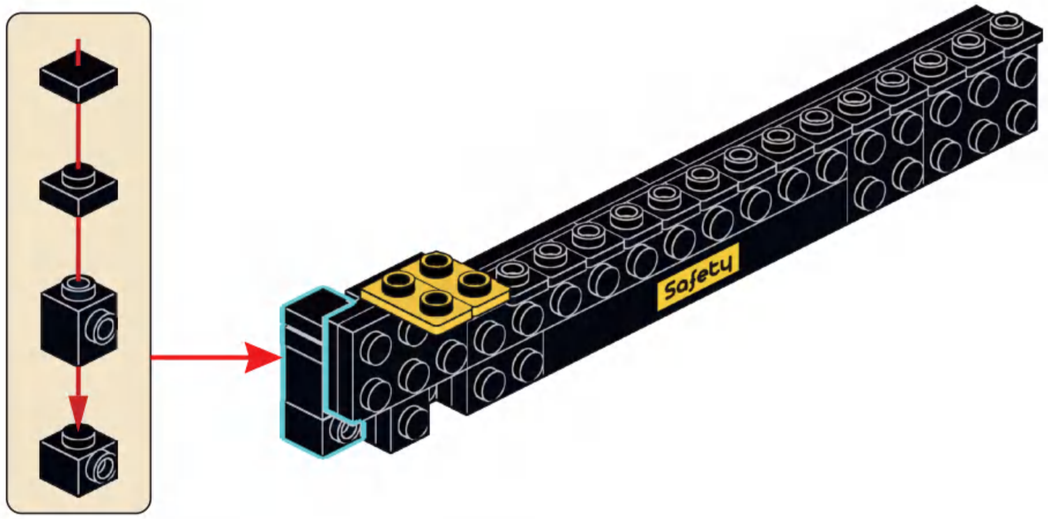

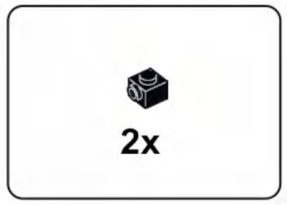

D32

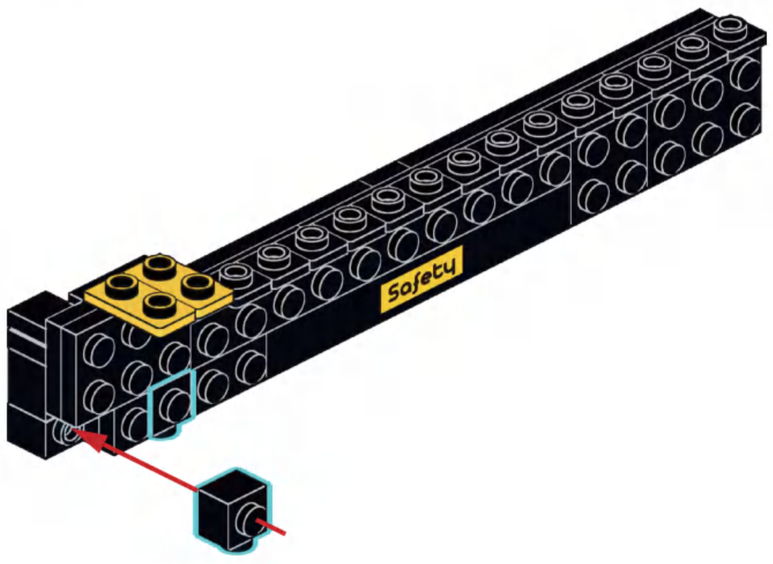

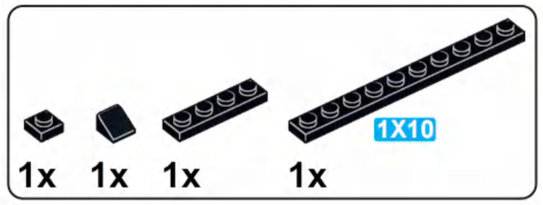

D33

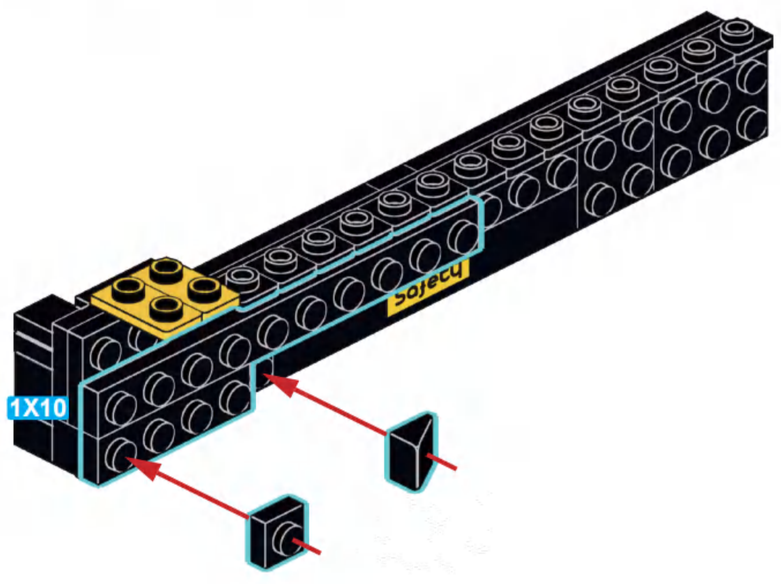

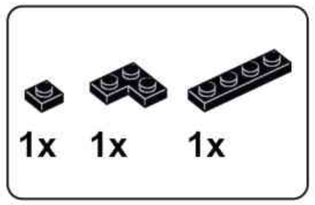

D34

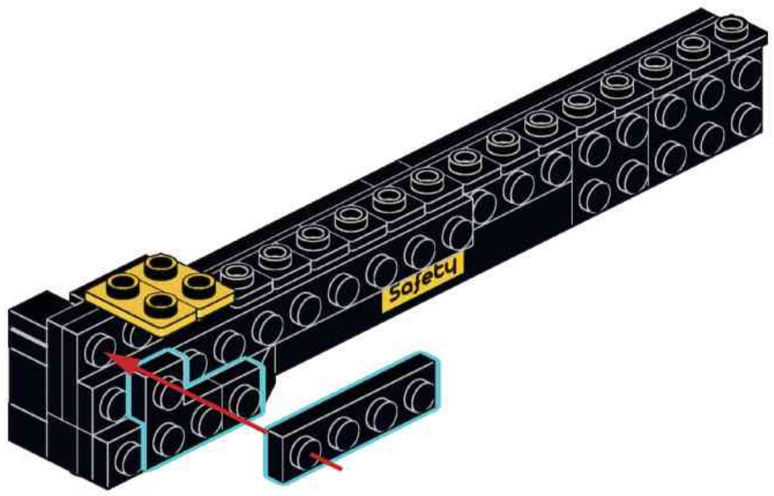

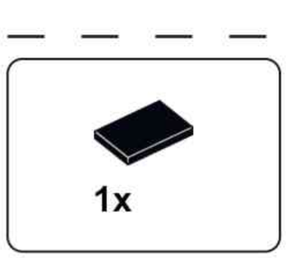

D36

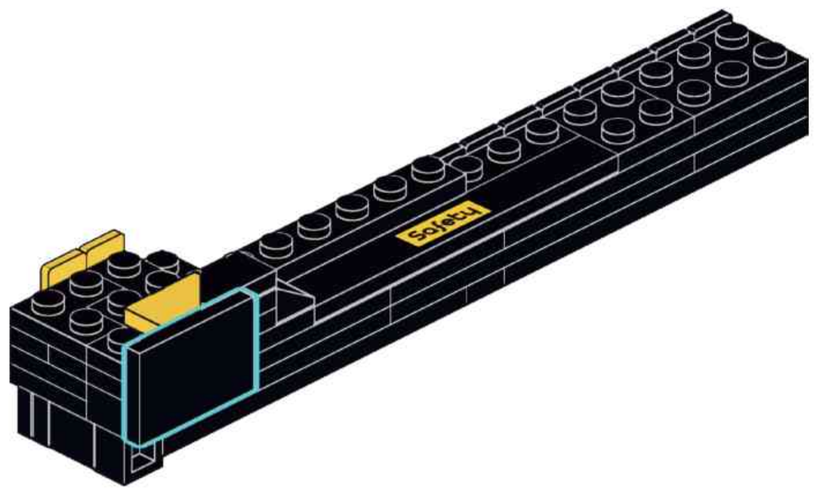

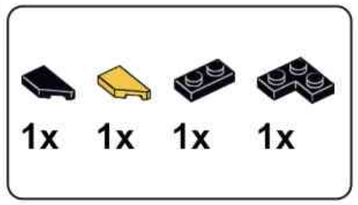

D35

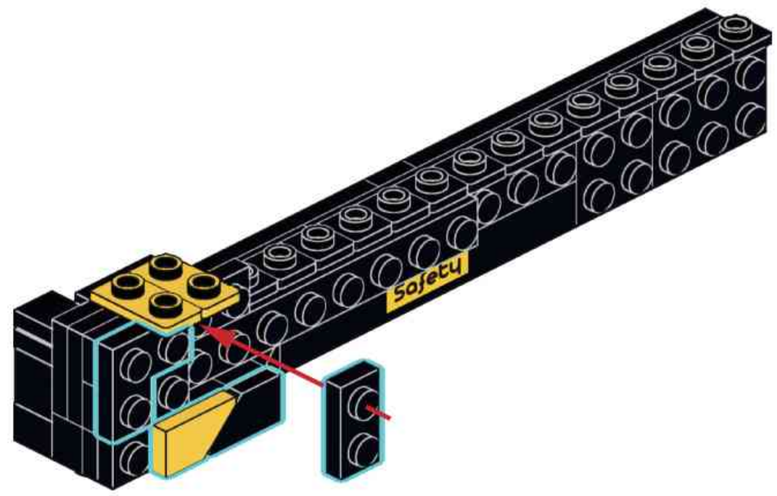

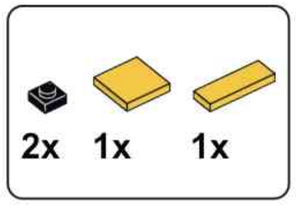

D37

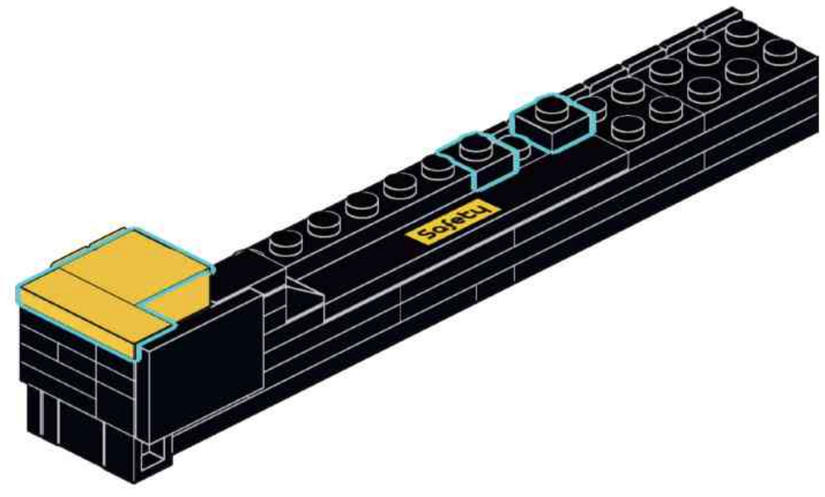

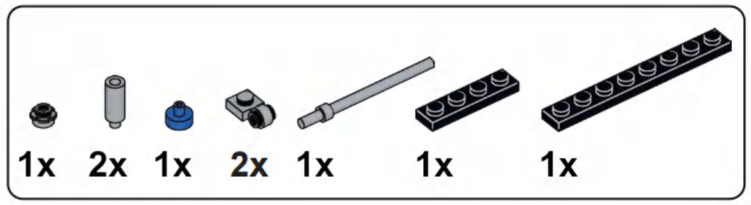

D38

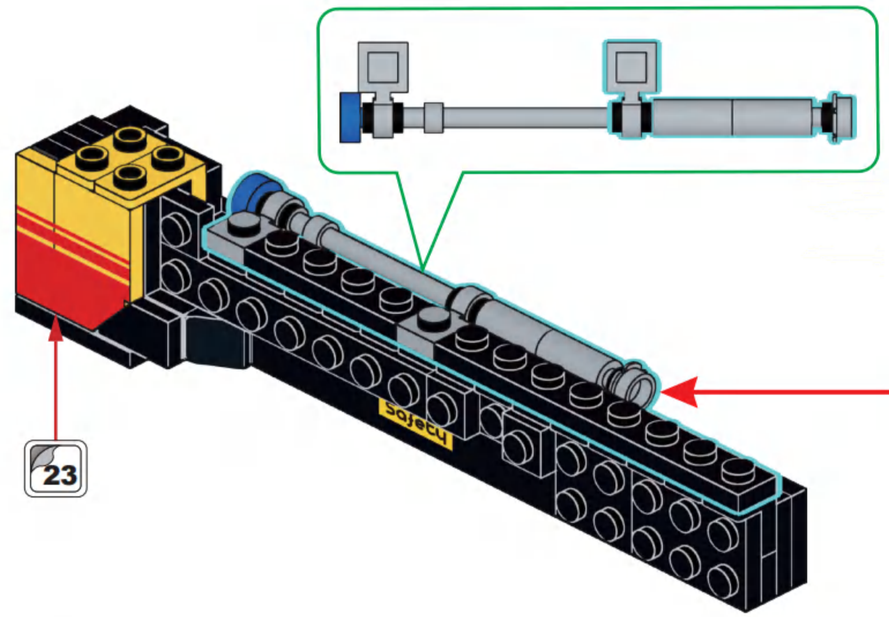

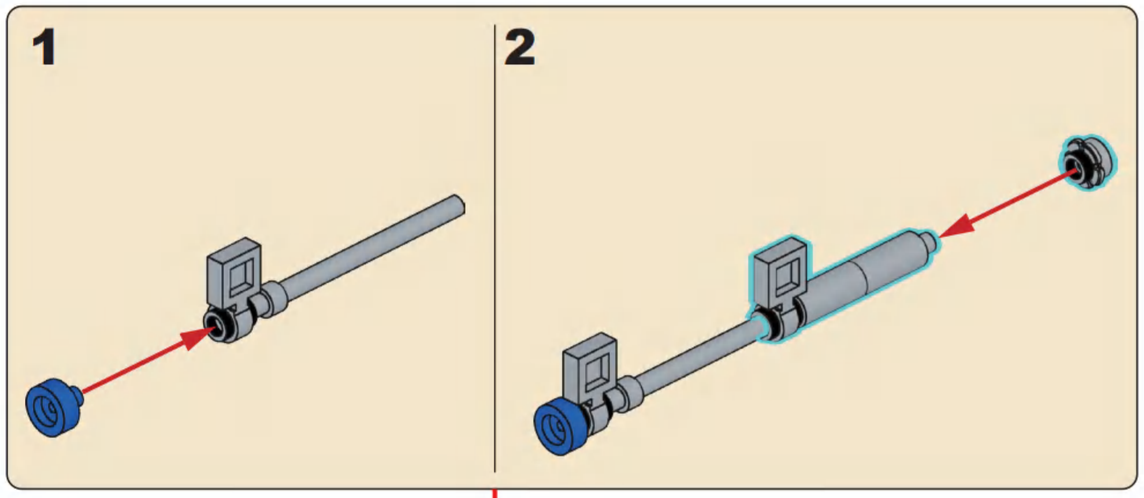

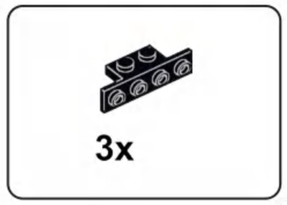

D39

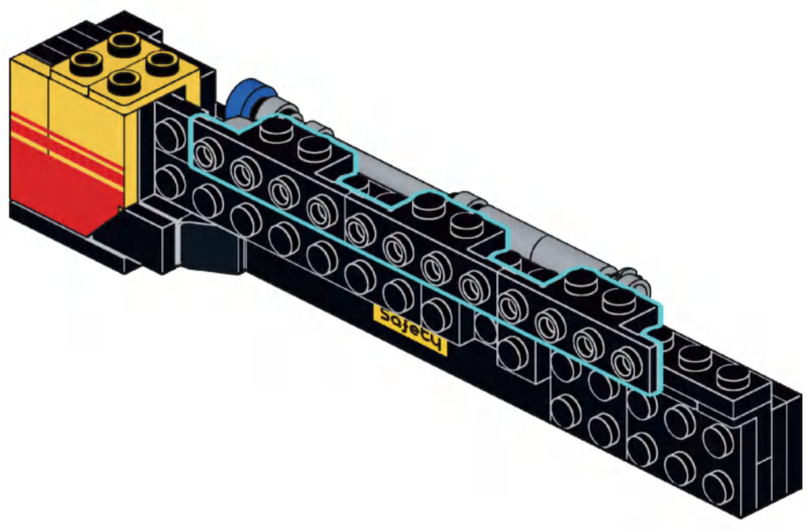

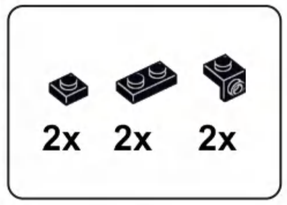

D40

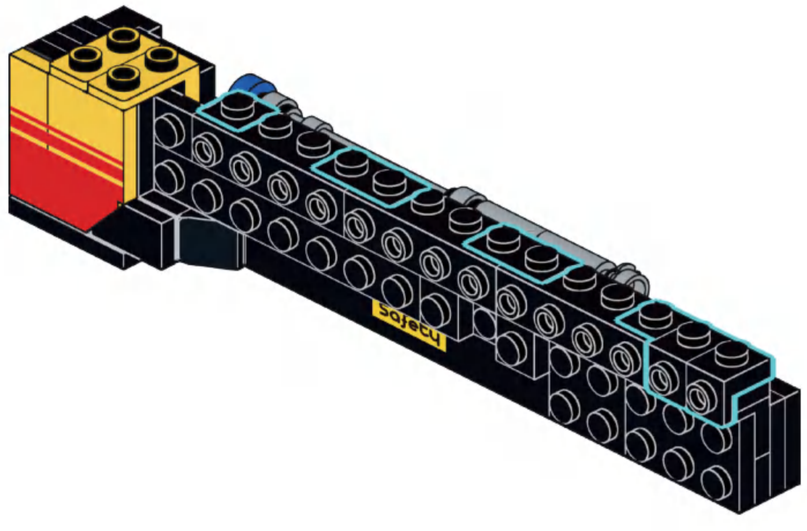

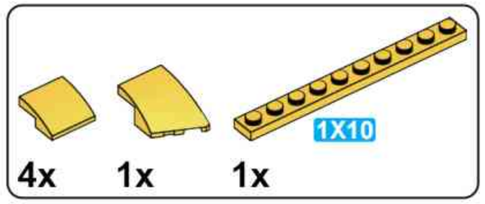

D41

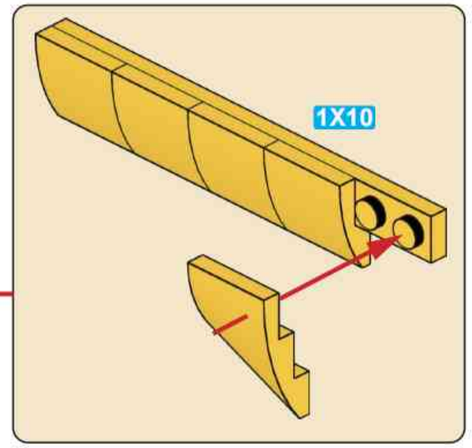

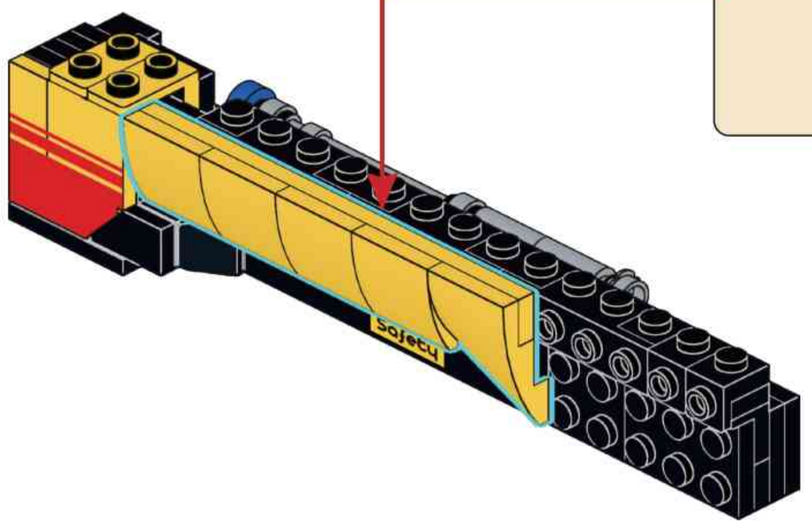

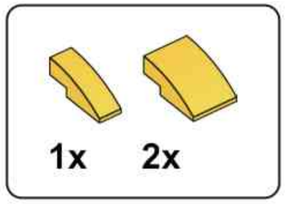

D42

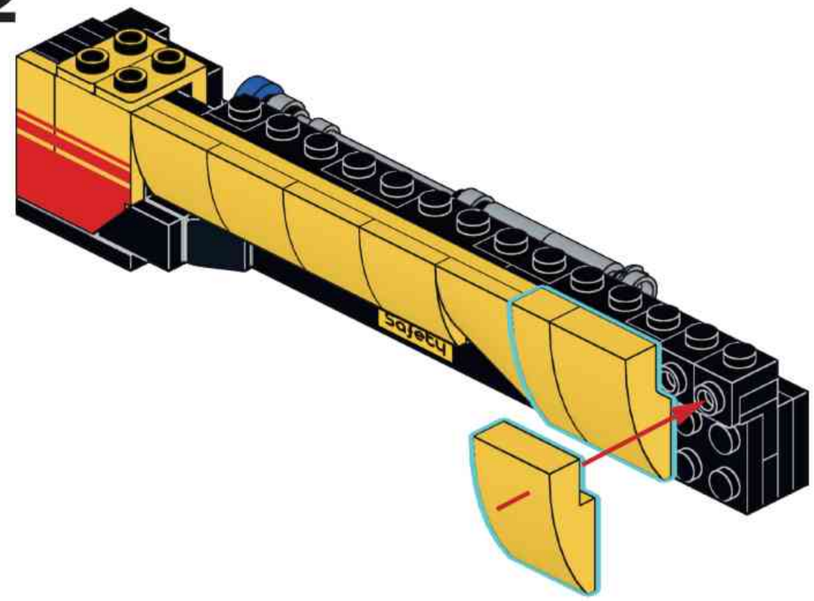

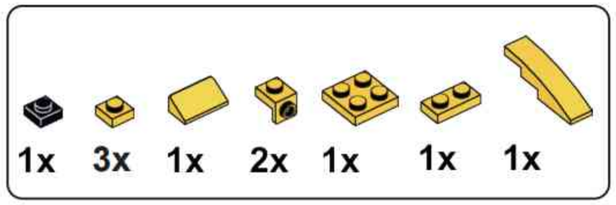

D43

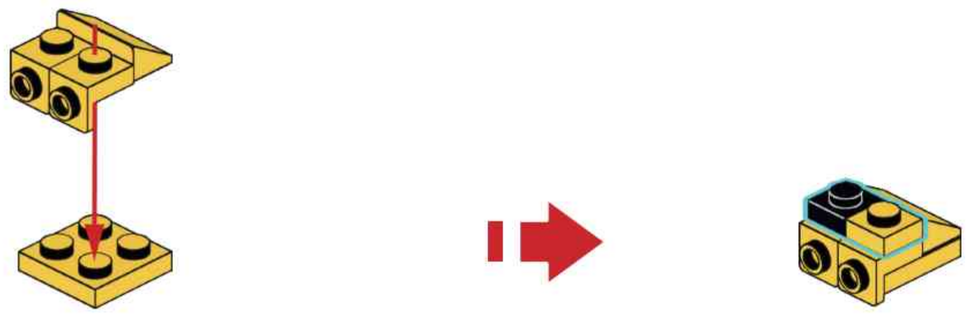

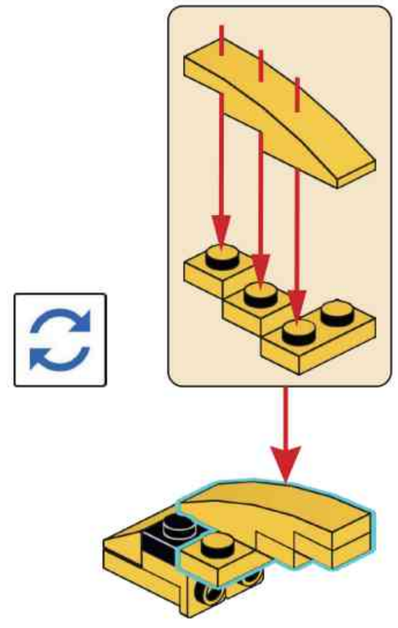

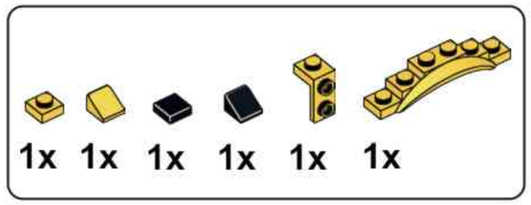

D44

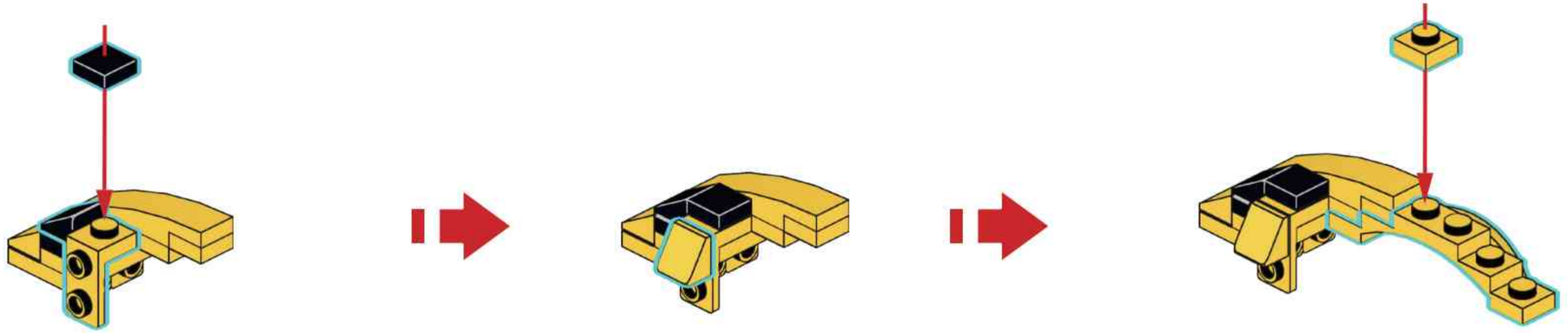

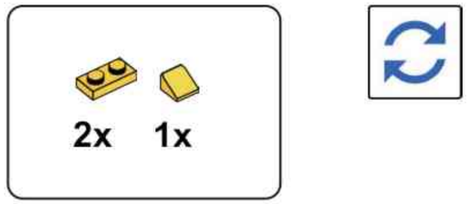

D45

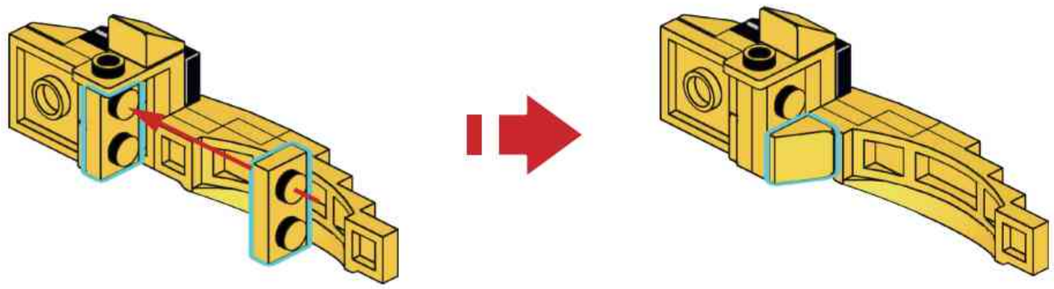

D46

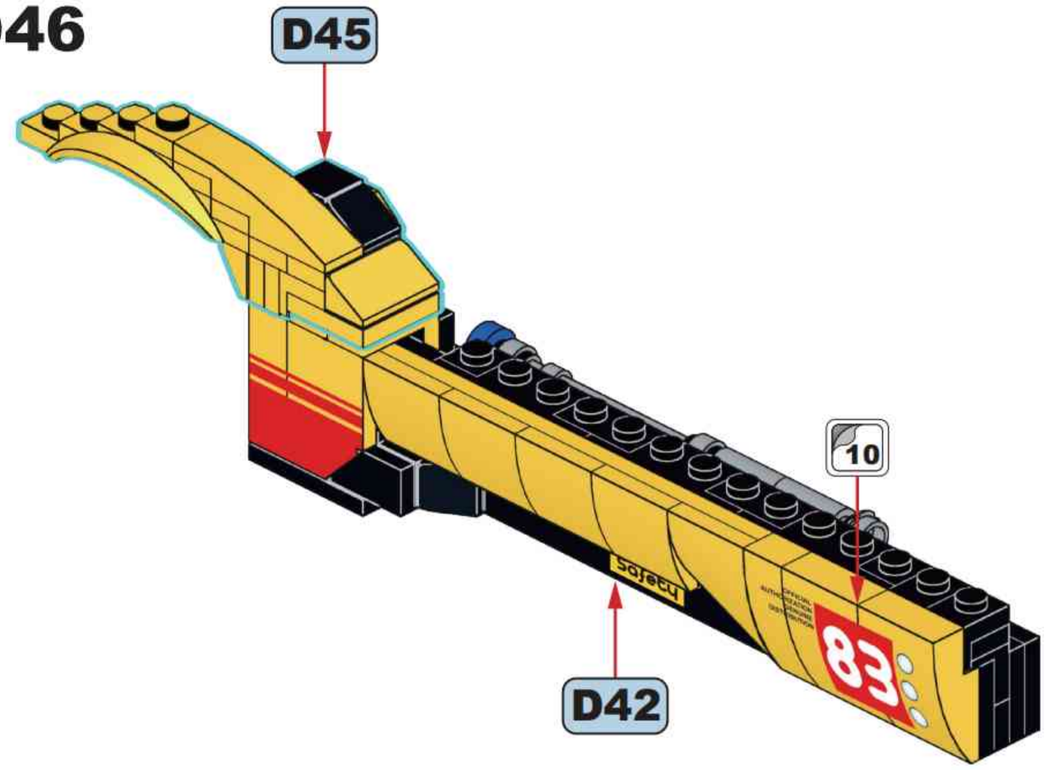

D47

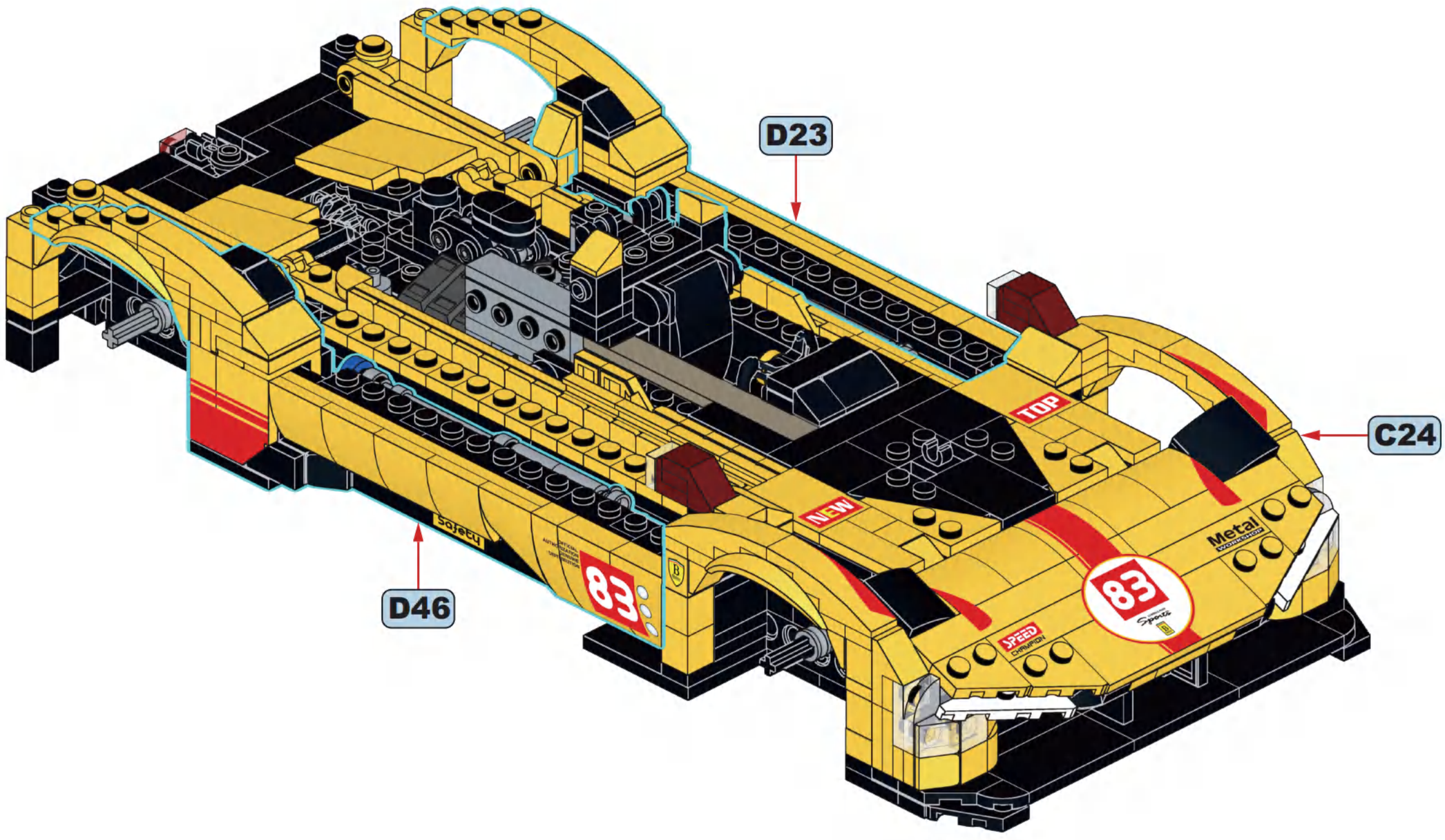

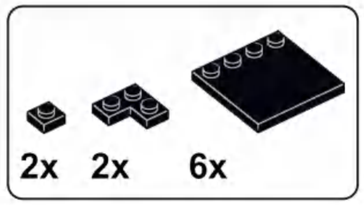

D48

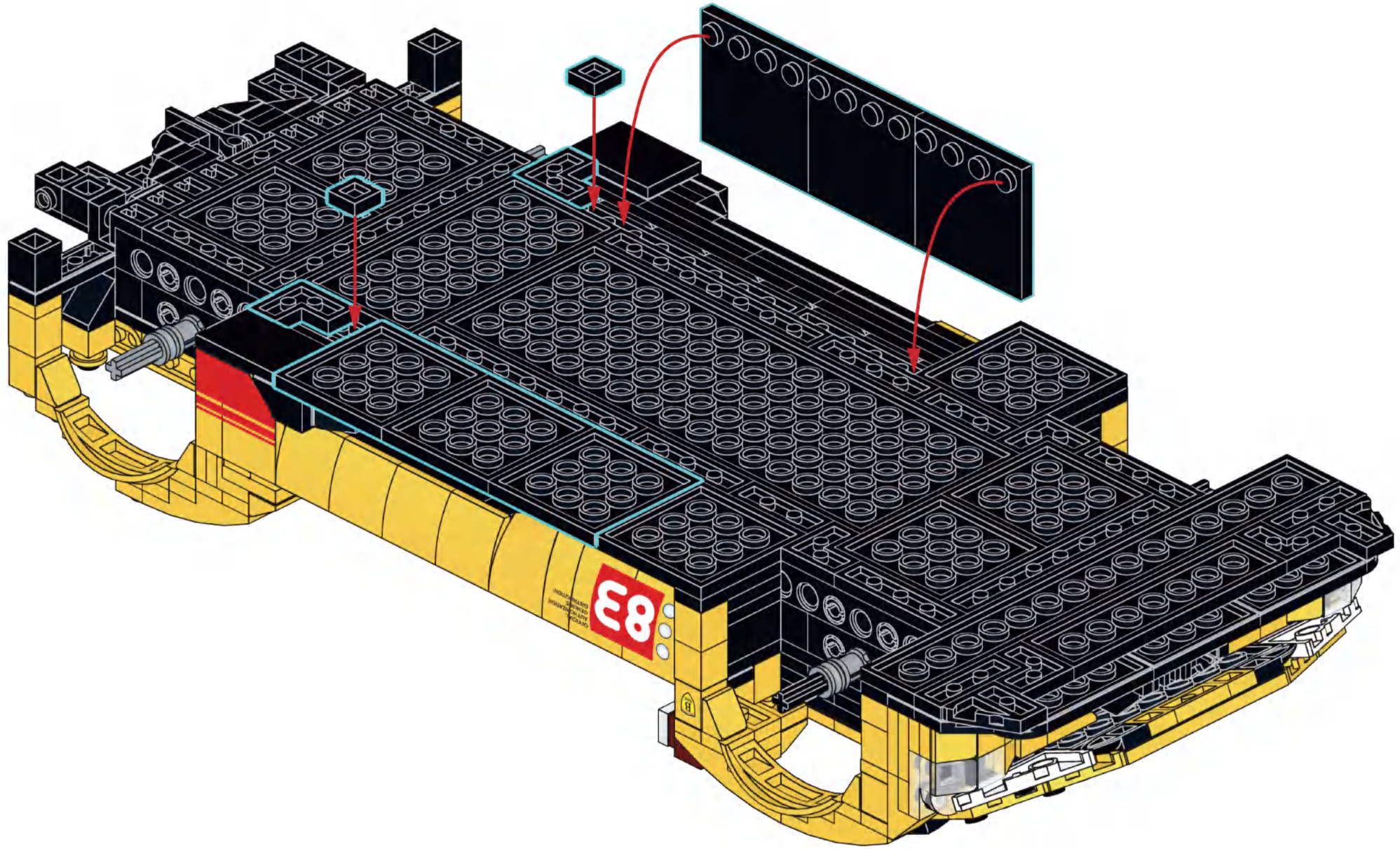

2x 2x 2x 2x

D49

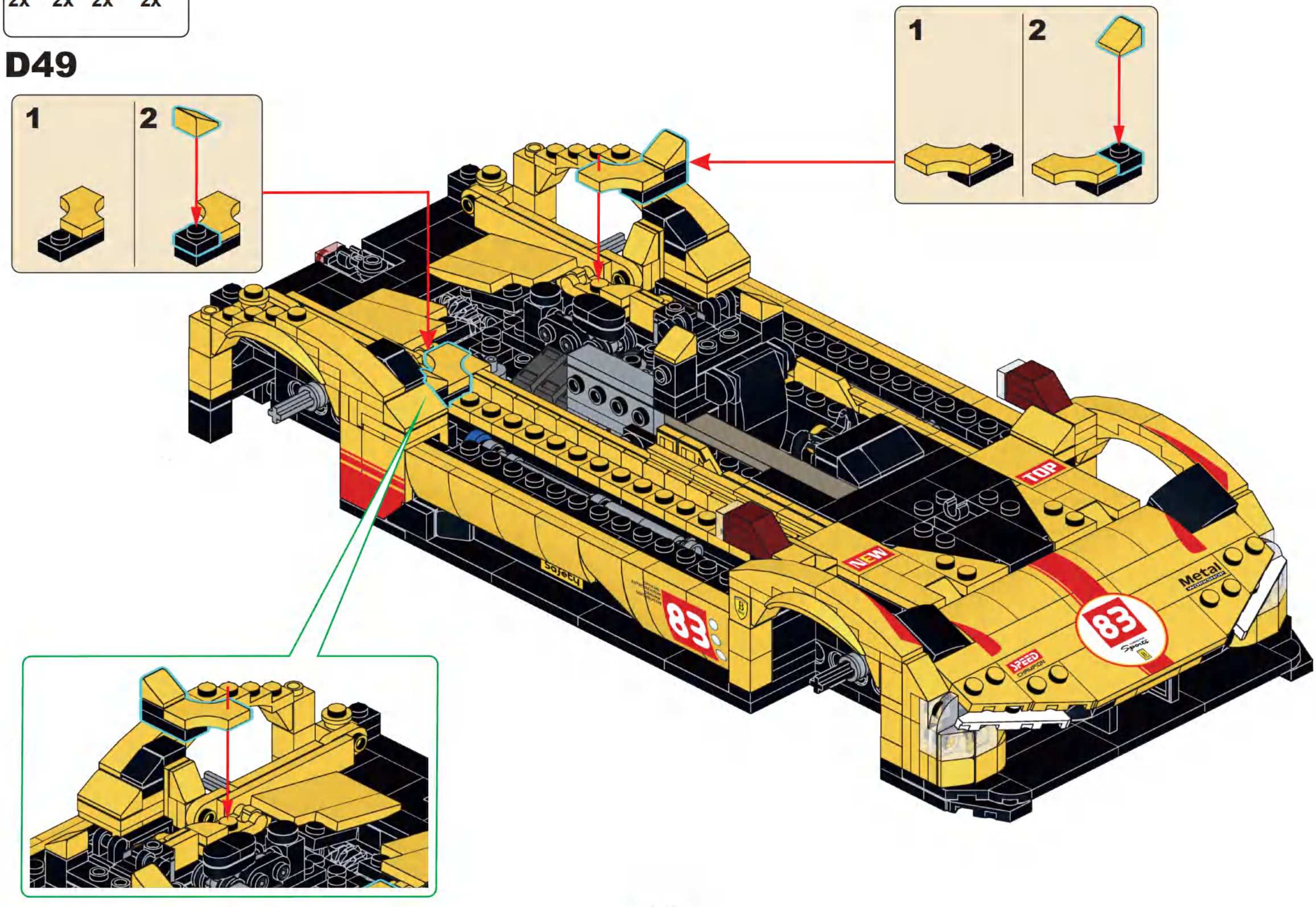

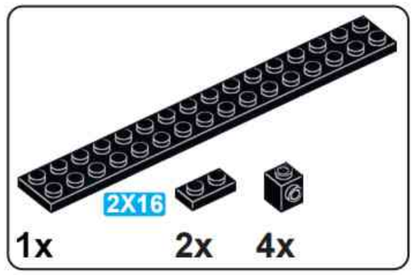

D50

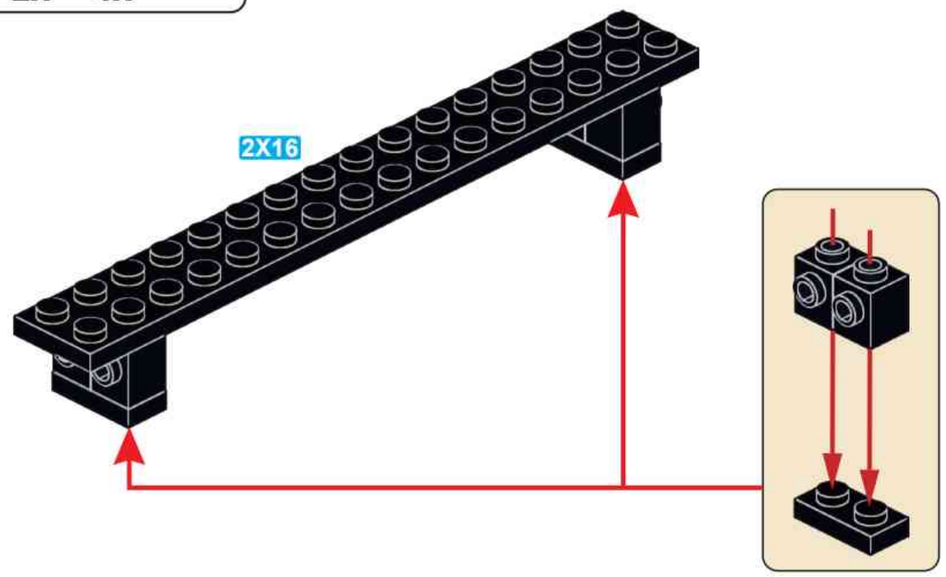

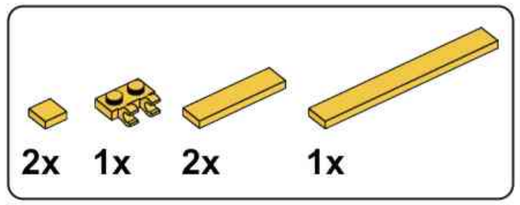

D51

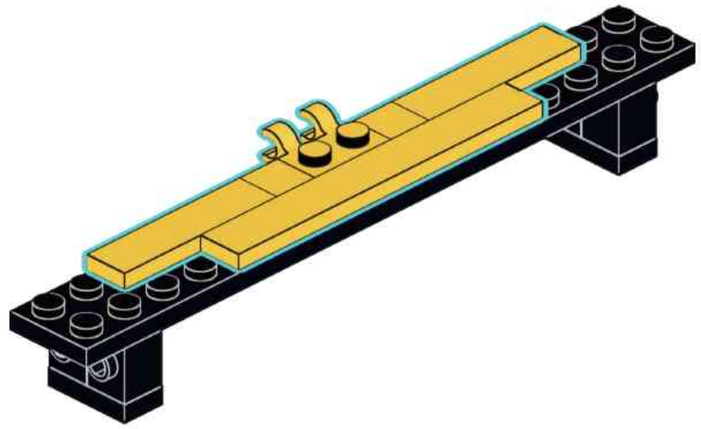

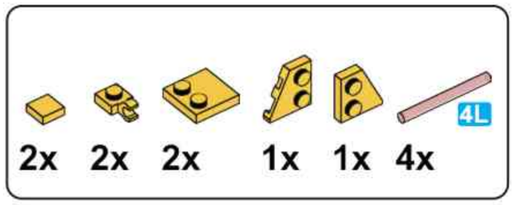

D52

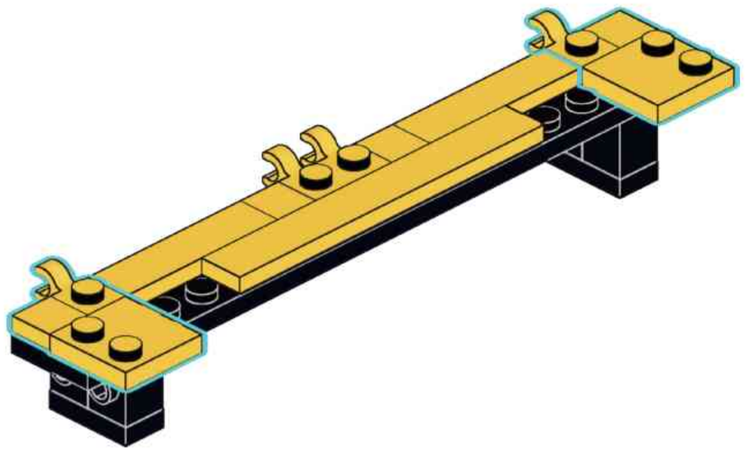

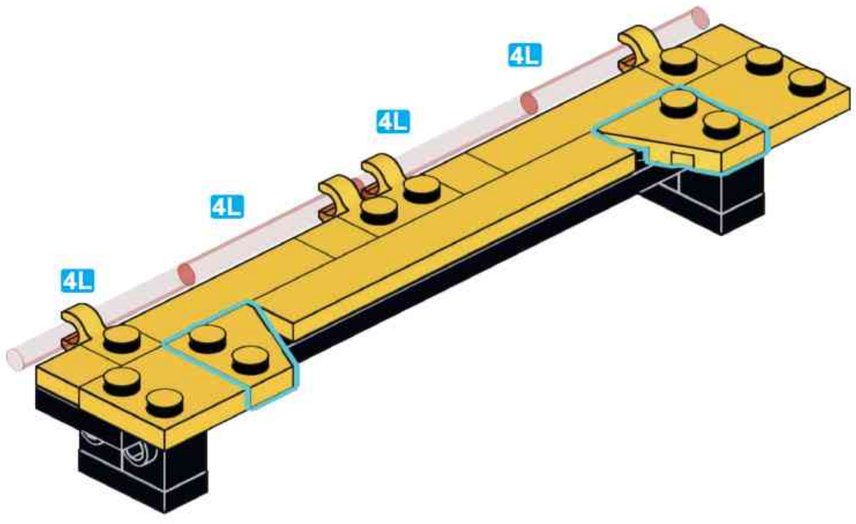

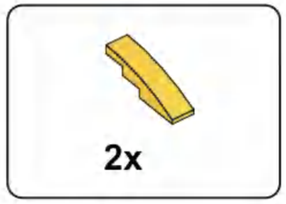

D53

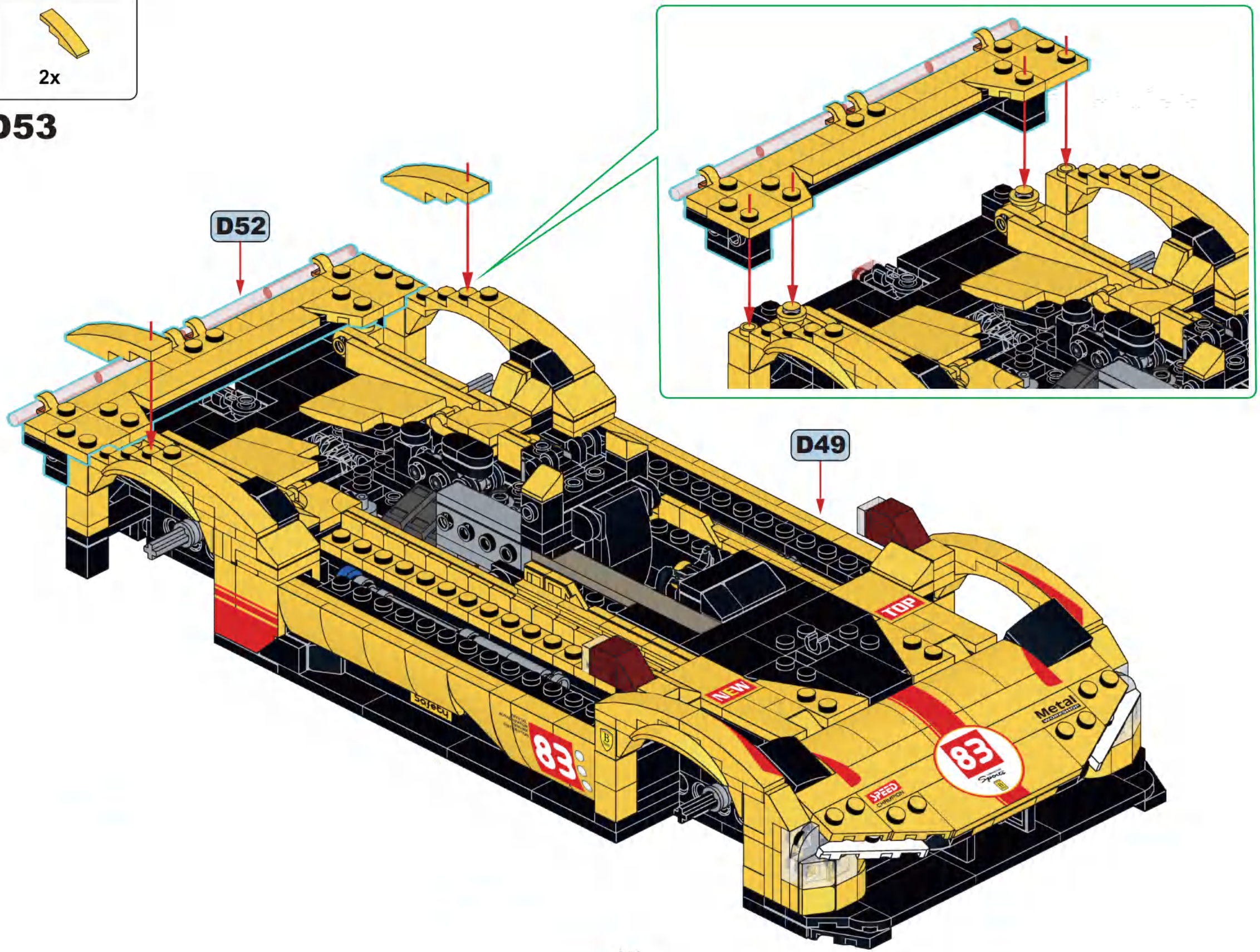

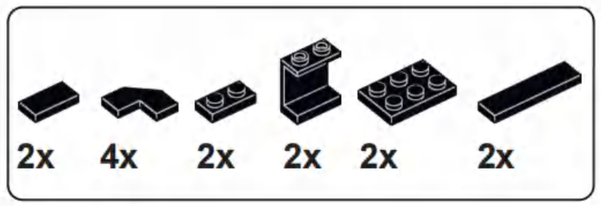
2x
4x
2x
2x
2x
2x

D54

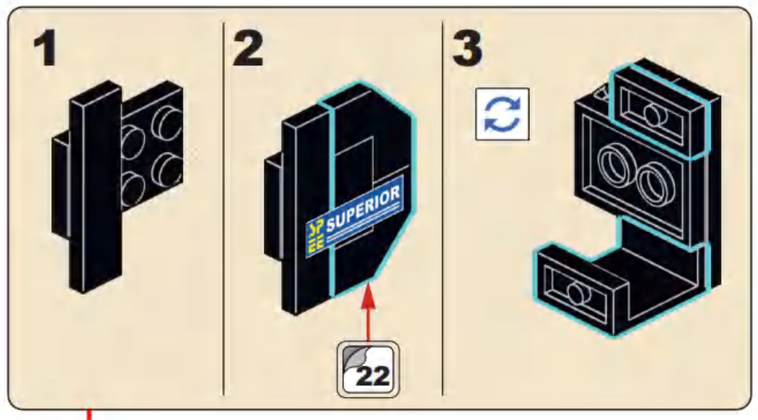
1
2
3
SUPERIOR
22

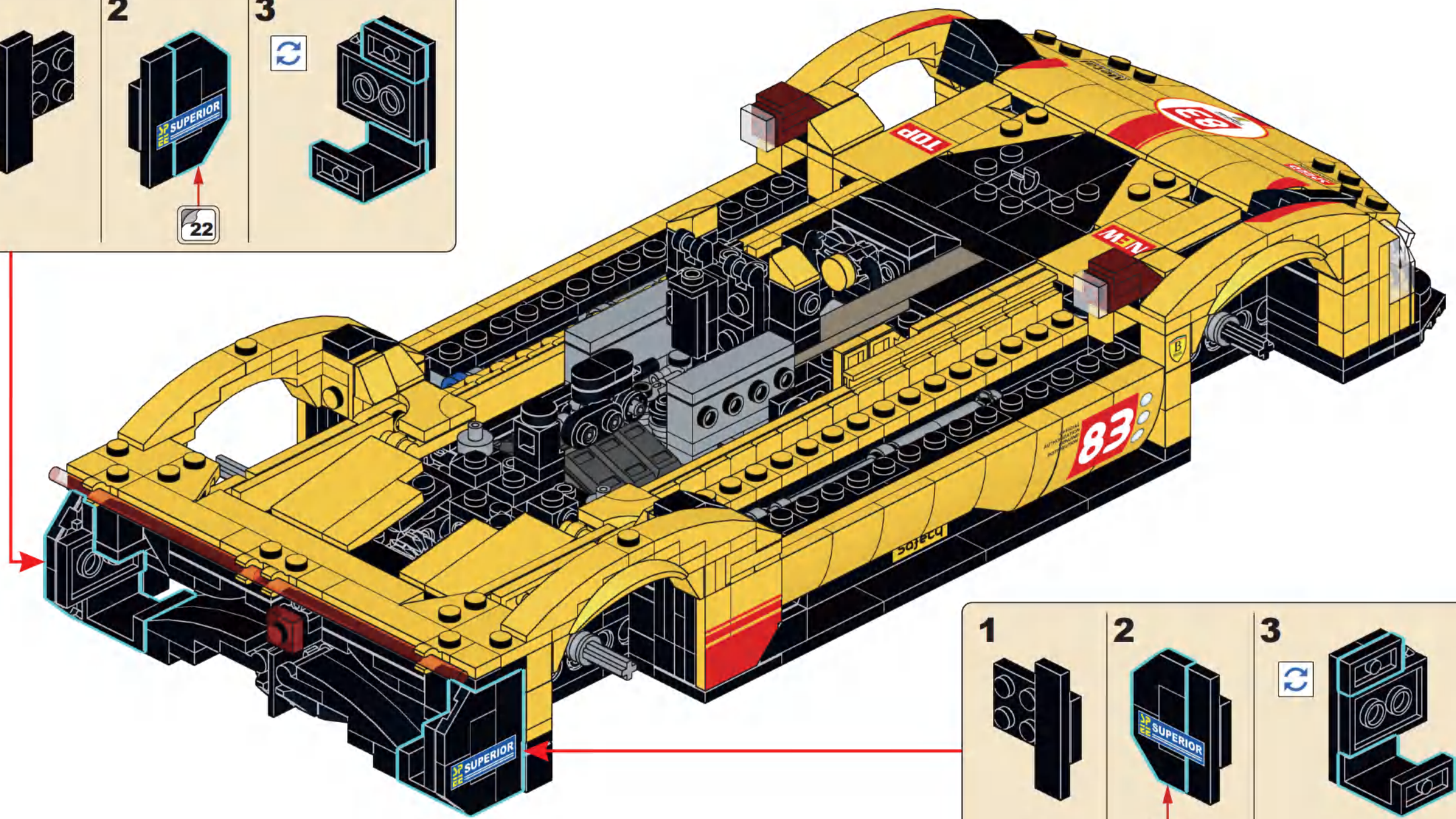
TOP
NEW
83
SUPERIOR

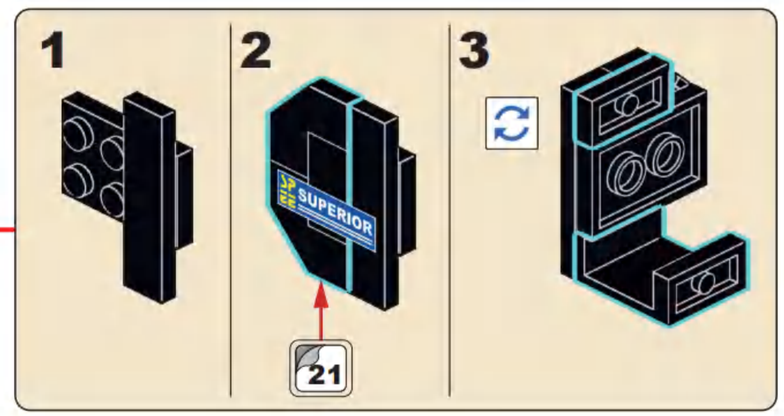
1
2
3
SUPERIOR
21

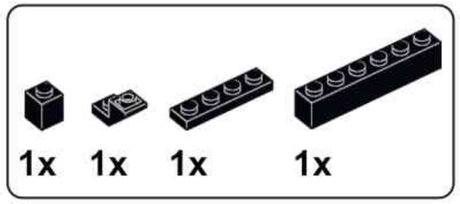

D55

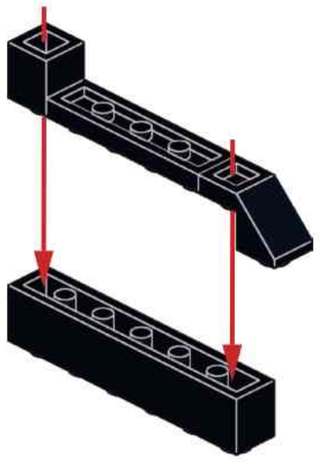

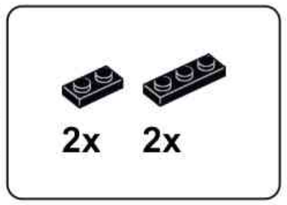

D56

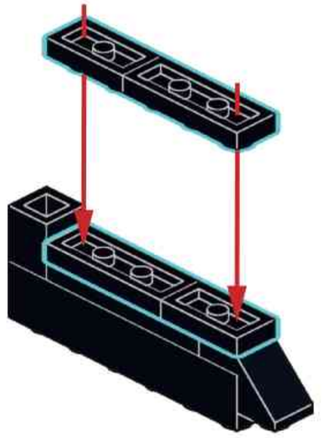

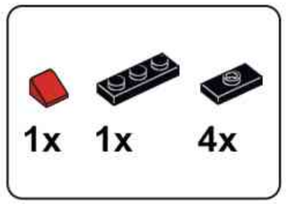

D57

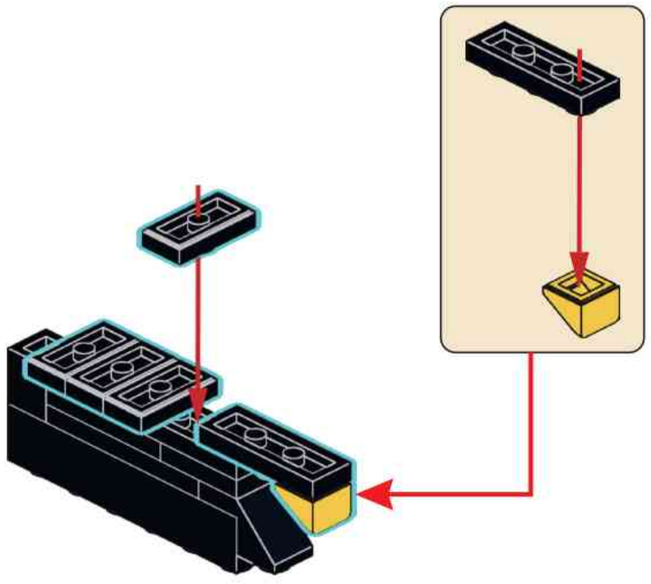

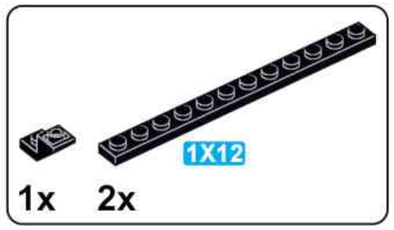

D58

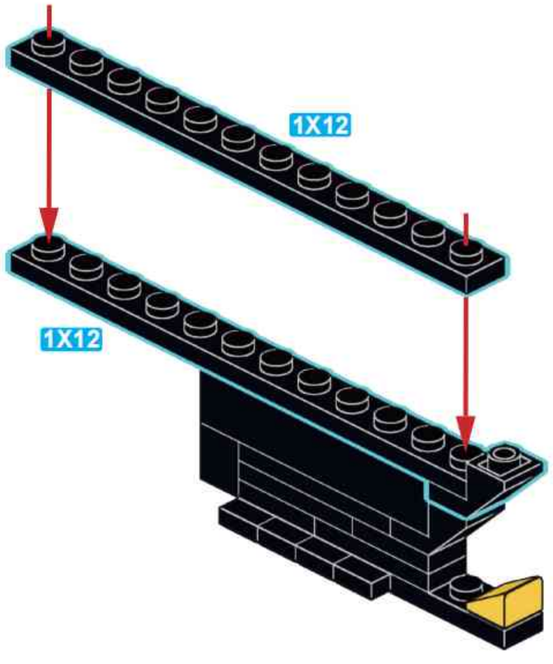

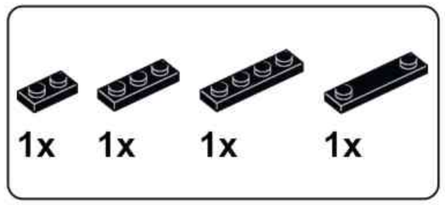

D59

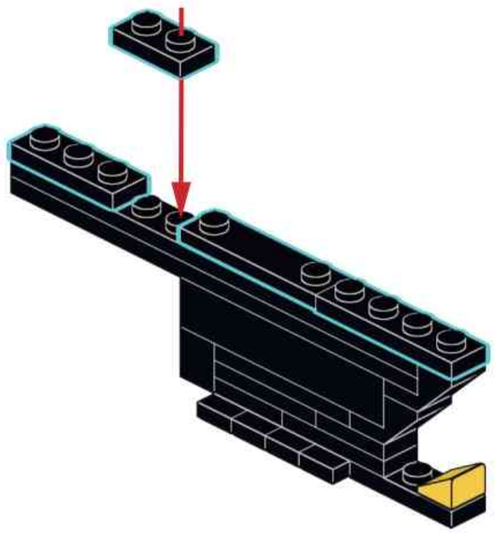

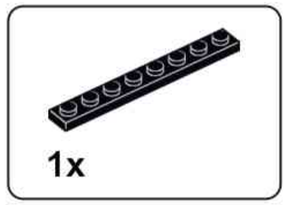

D60

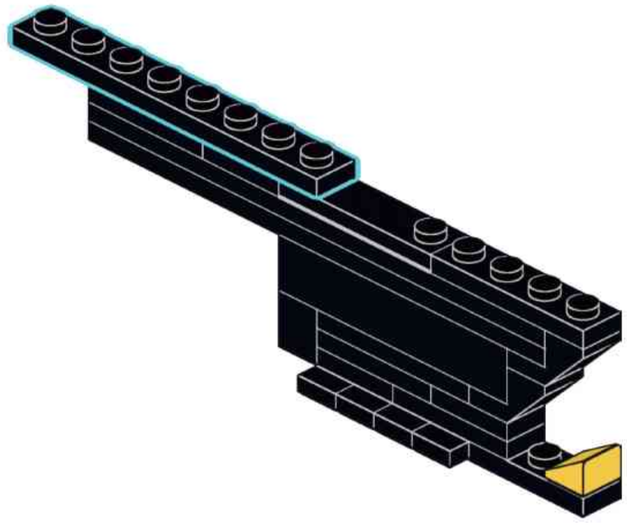

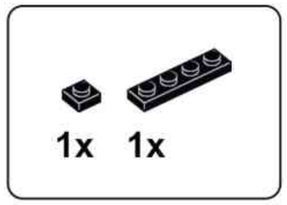

D61

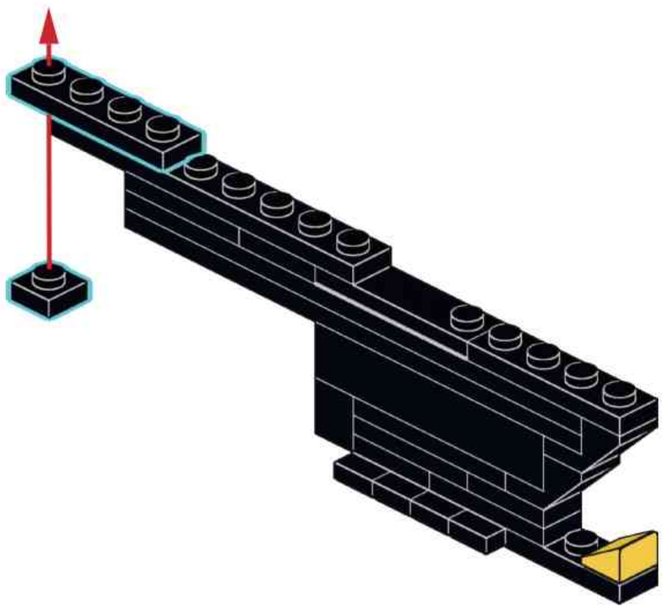

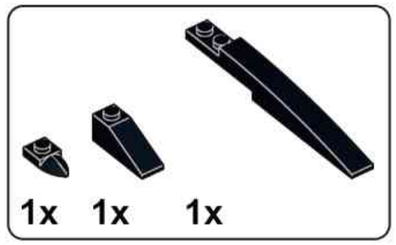

D62

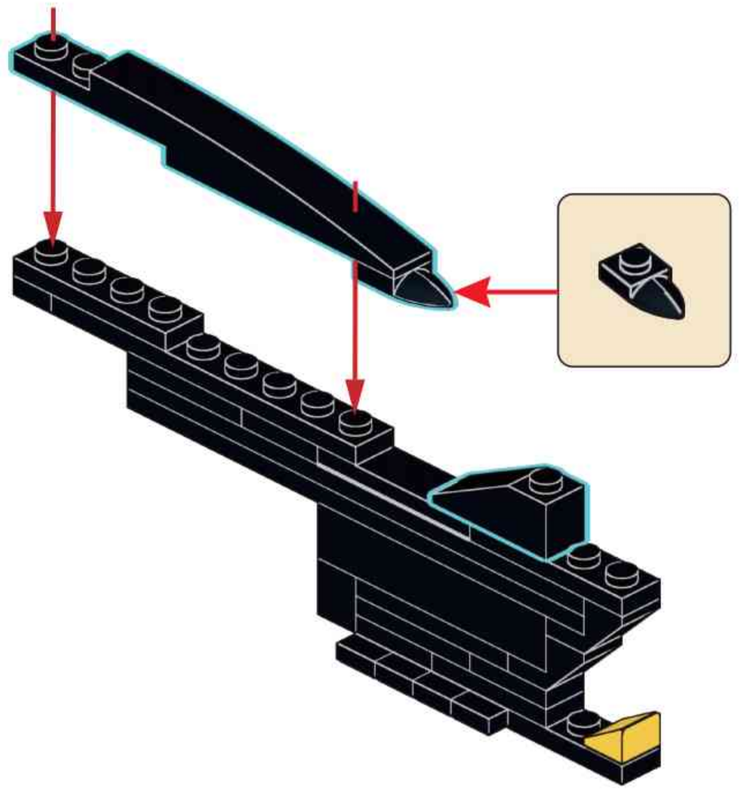

2x 1x

D63

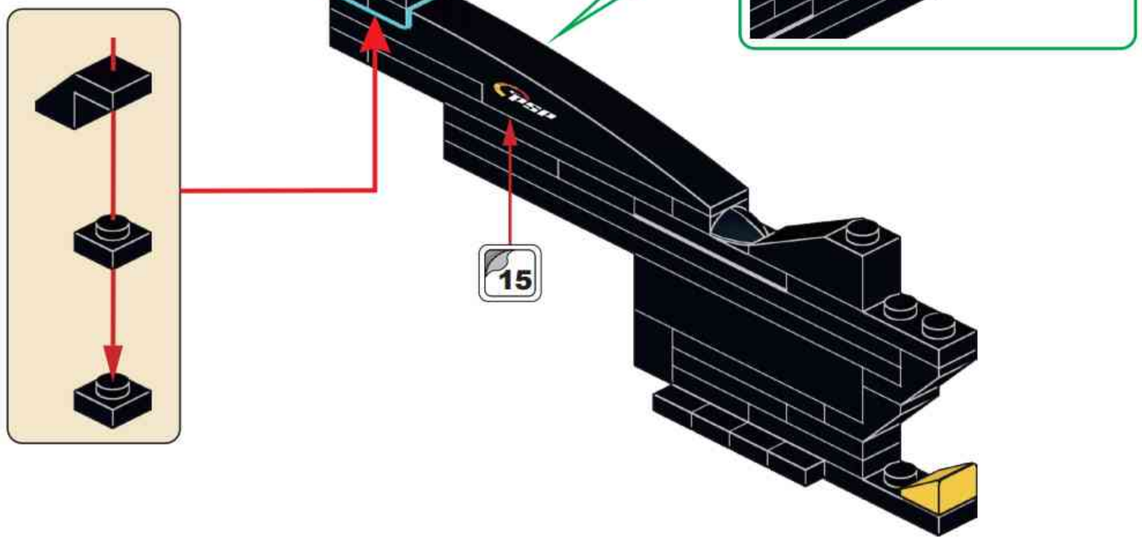

2x 1x 1x 3x

D64

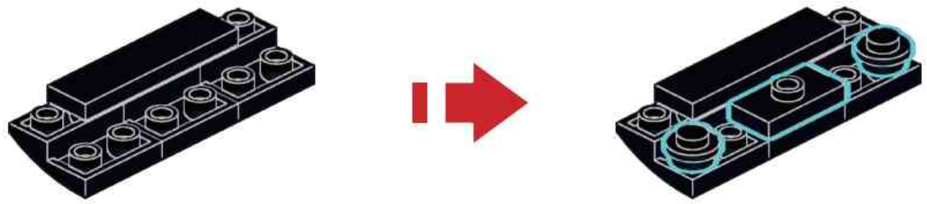

2x 1x 1x

D65

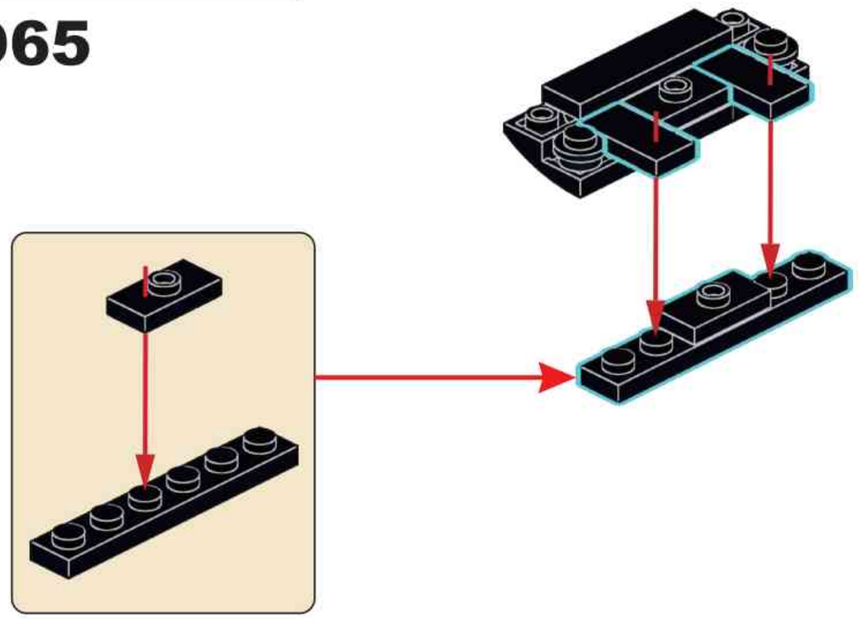

1x 1x 1x

D66

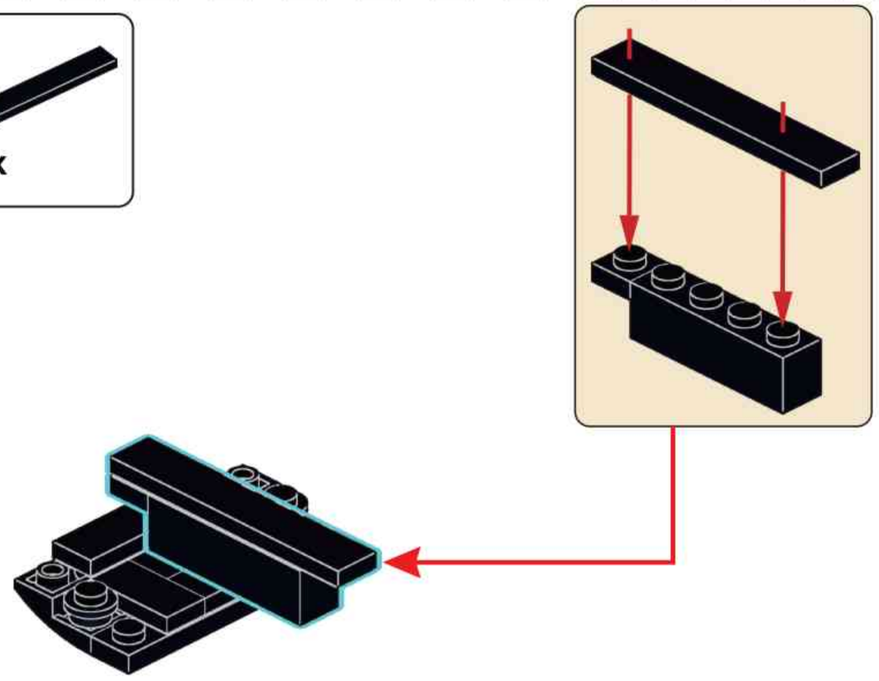

4x 2x 2x

D67

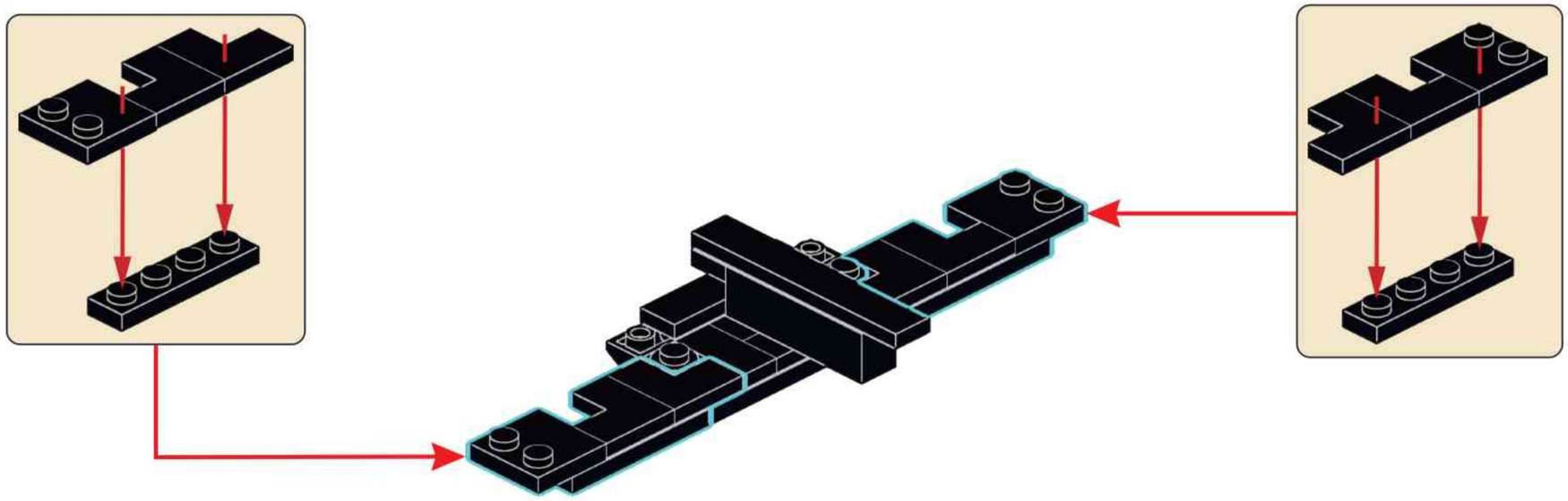

4x

D68

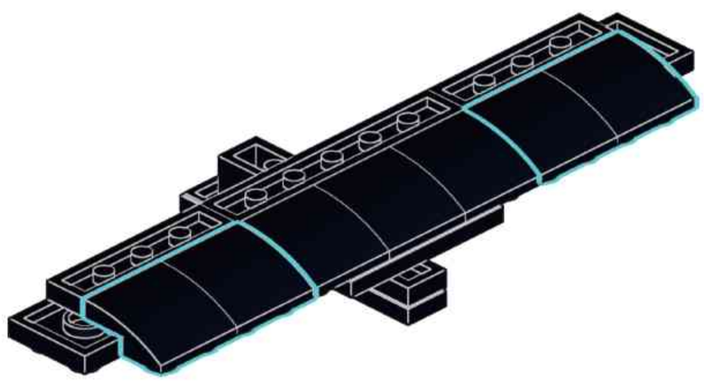

2x 2x

D69

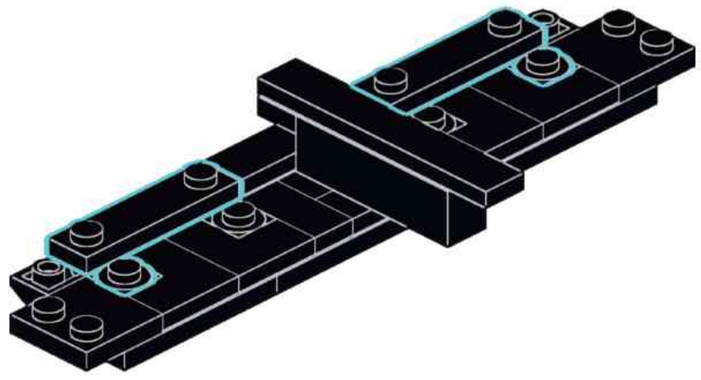

6x 4x

D70

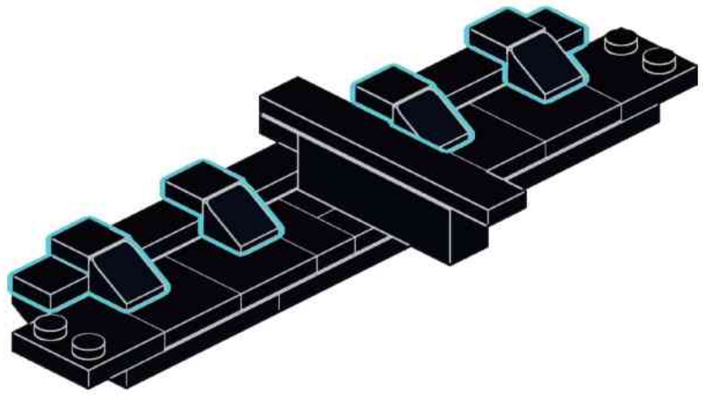

2x 2x

D71

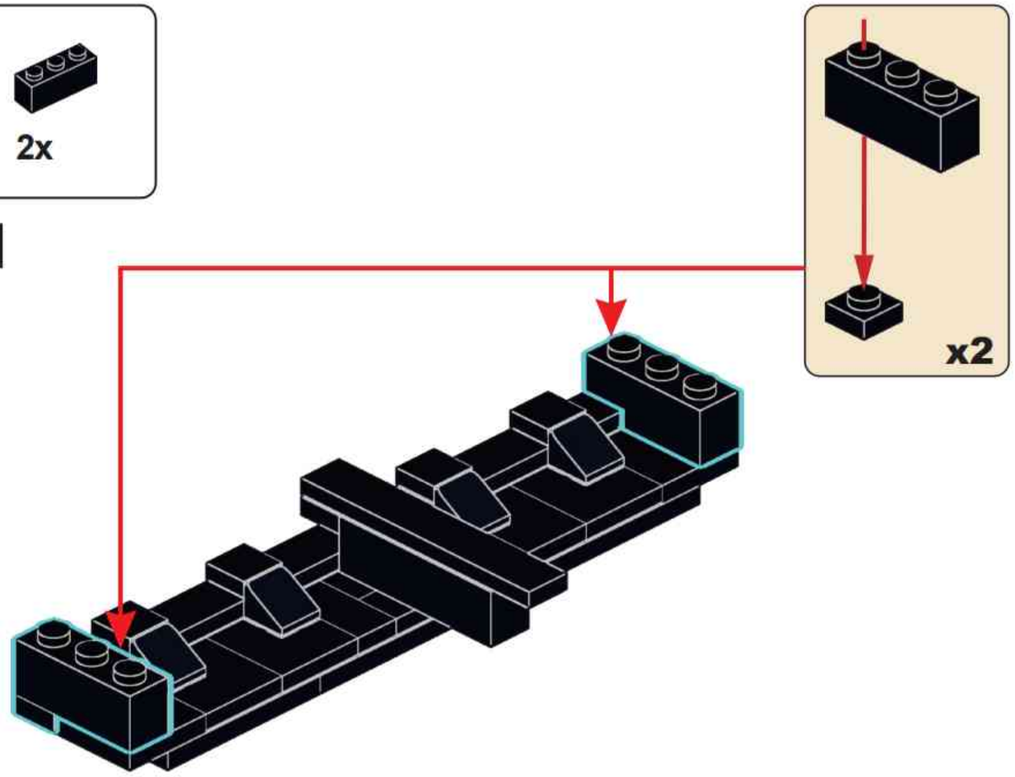

2x 2x 2x

D72

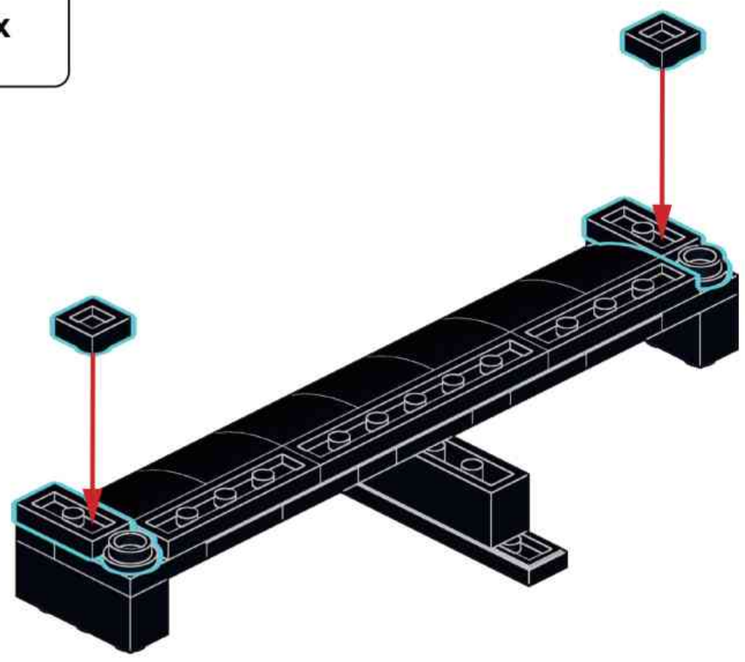

2x

D73

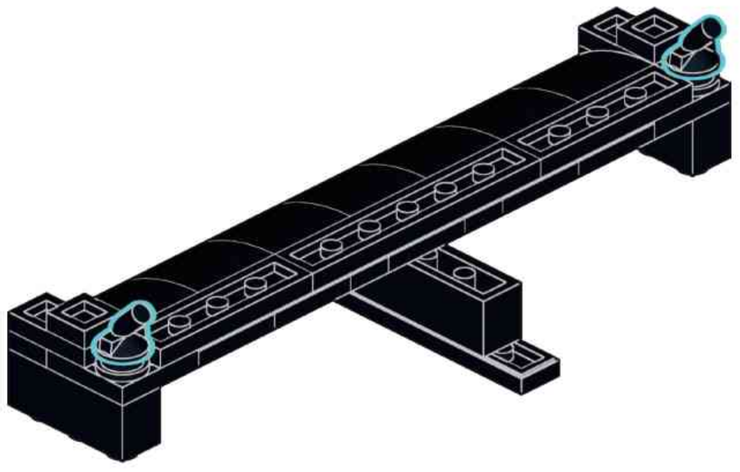

2x 2x

D74

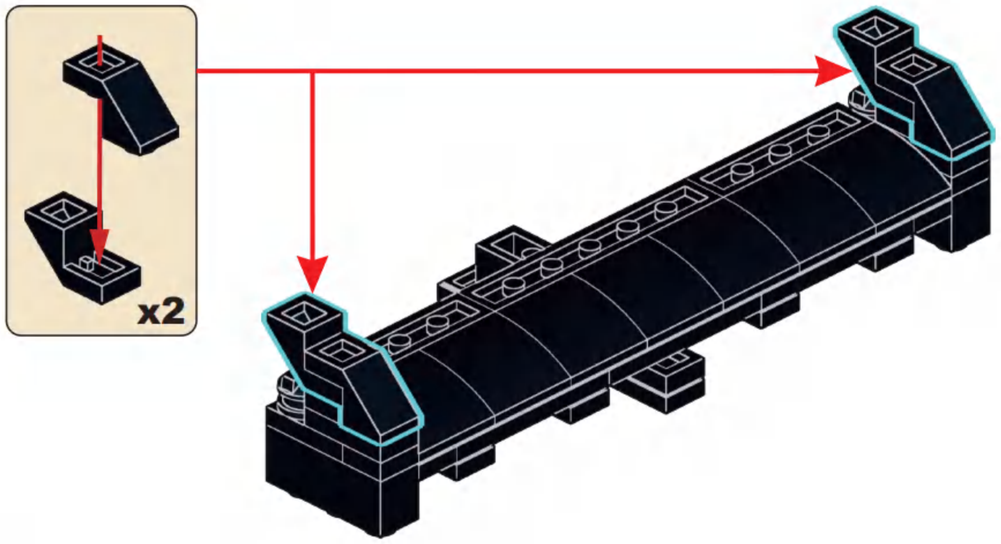

2x 2x 2x

D75

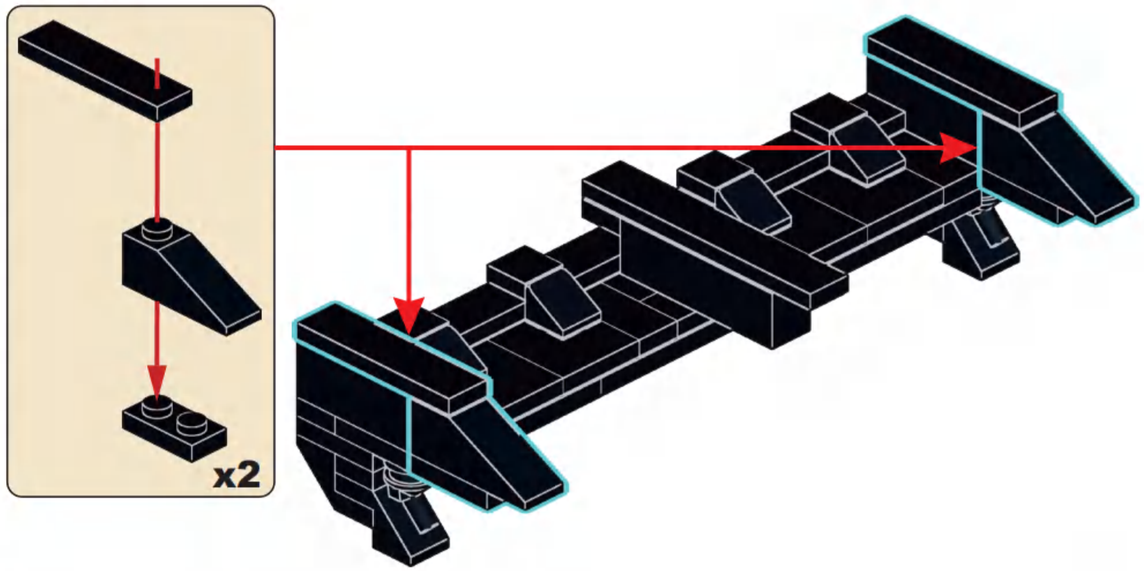

2x 2x

D77

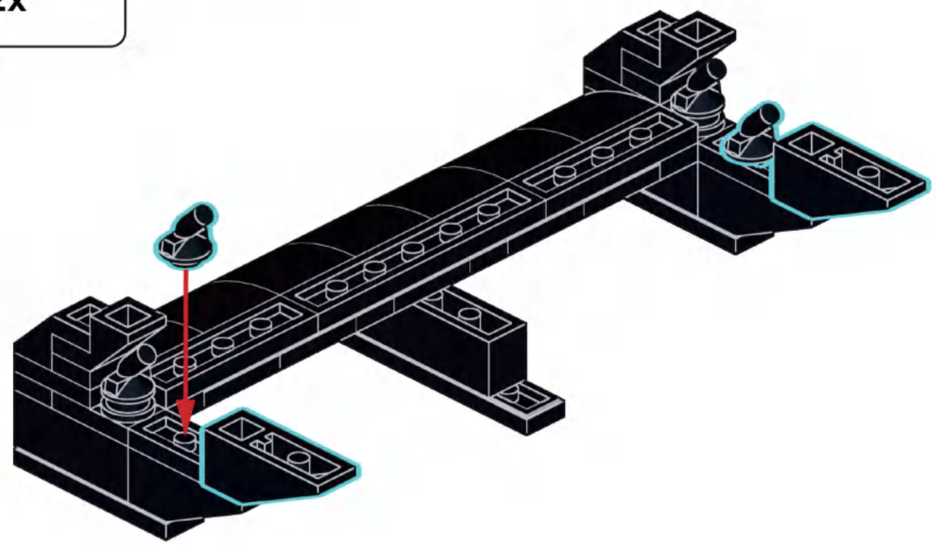

D78

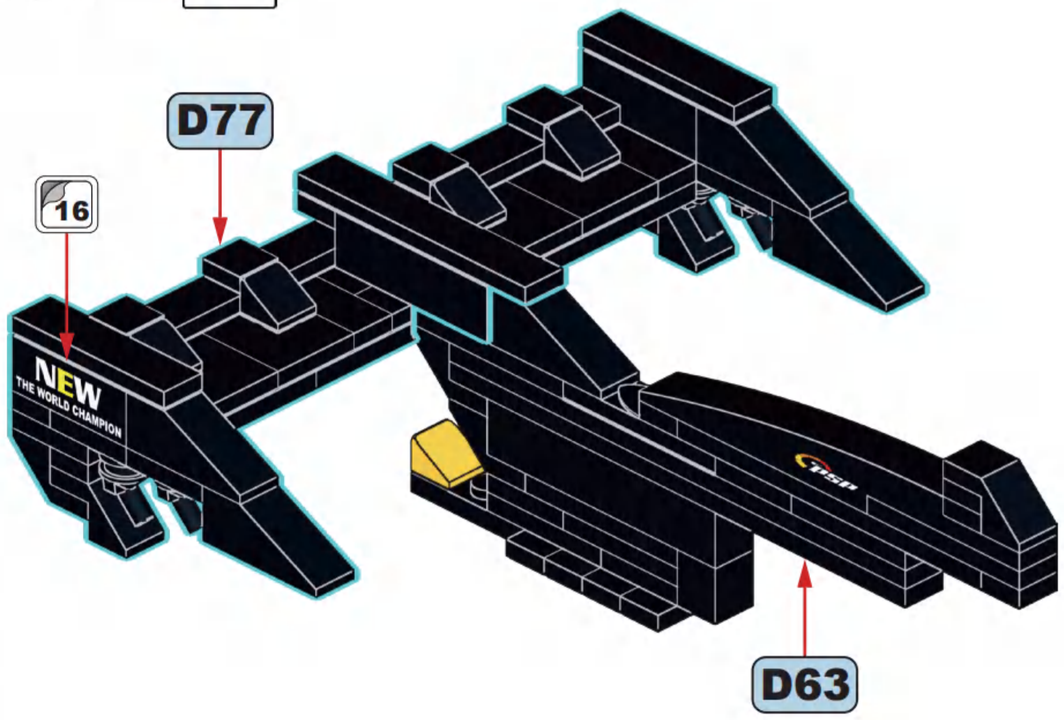

D79

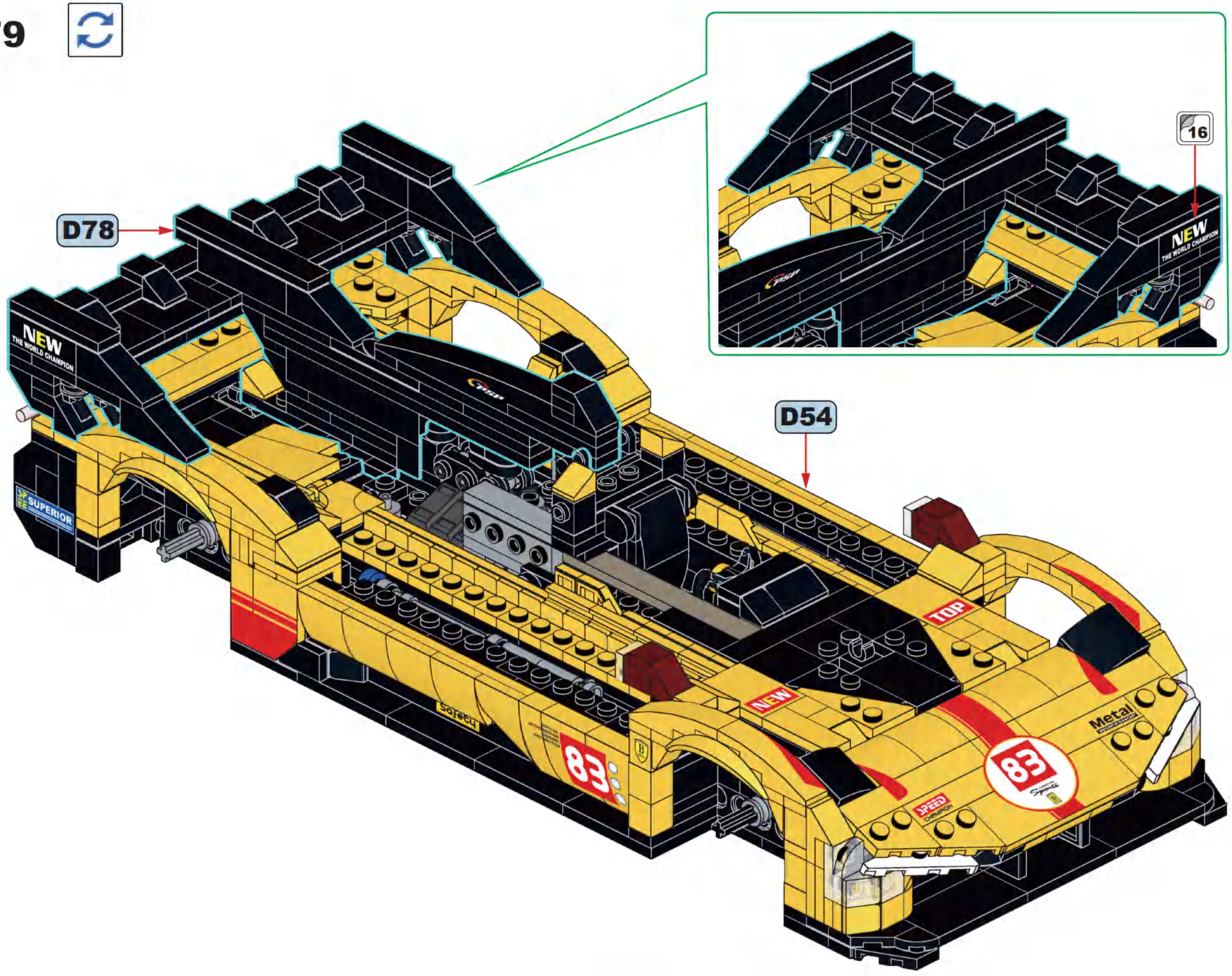
D78
D54
16
NEW
THE WORLD CHAMPION
SUPERIOR
TOP
Metal
83
Sports
SPEED
CHAMPION

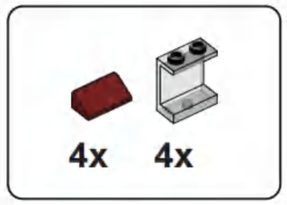
4x
4x

D80

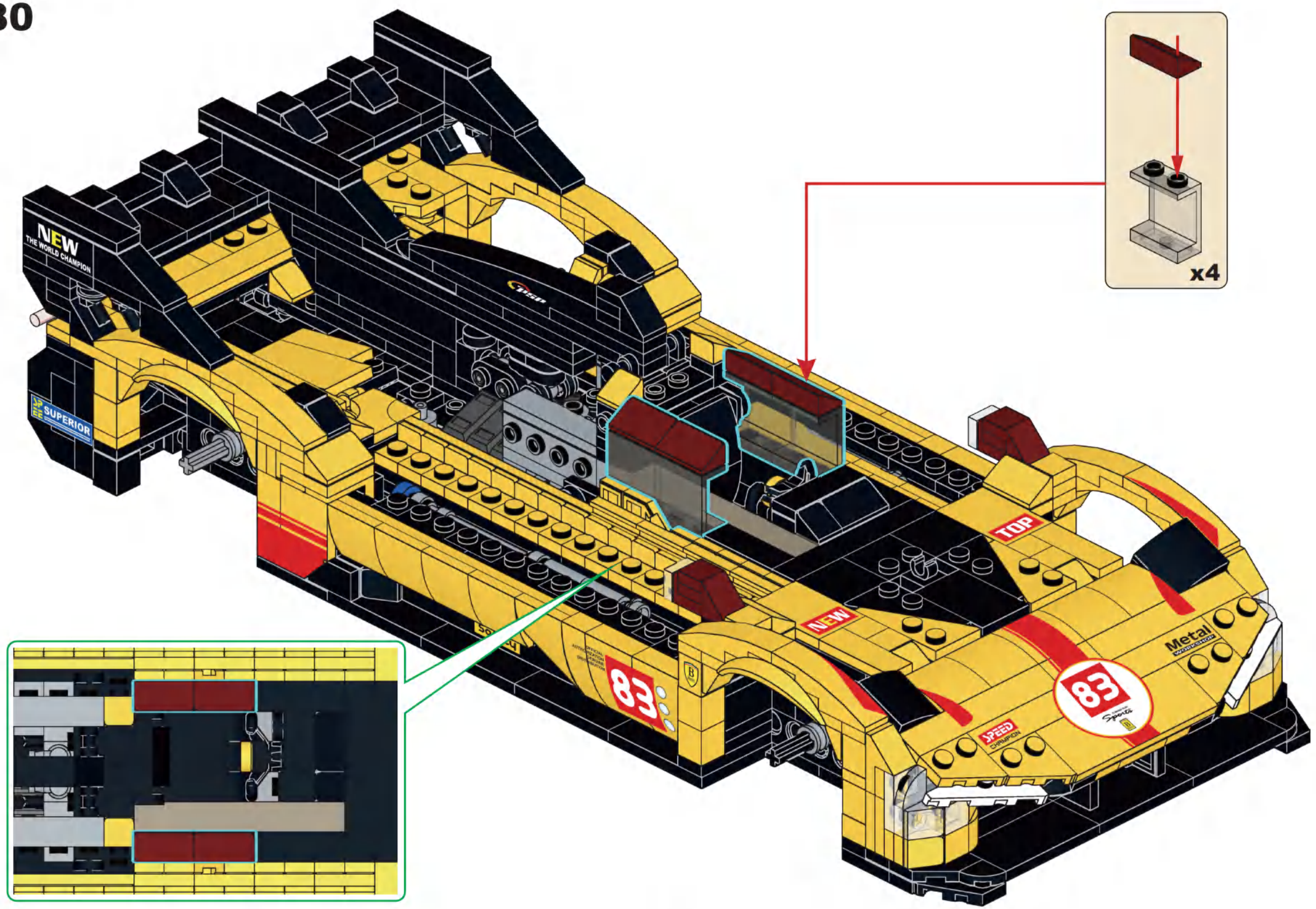
NEW
THE WORLD CHAMPION
SUPERIOR
83
TOP
NEW
Metal
83
SPEED
CHAMPION
x4

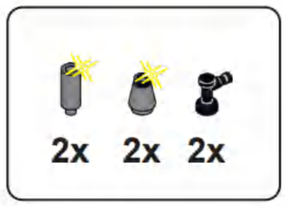
2x
2x
2x

D81

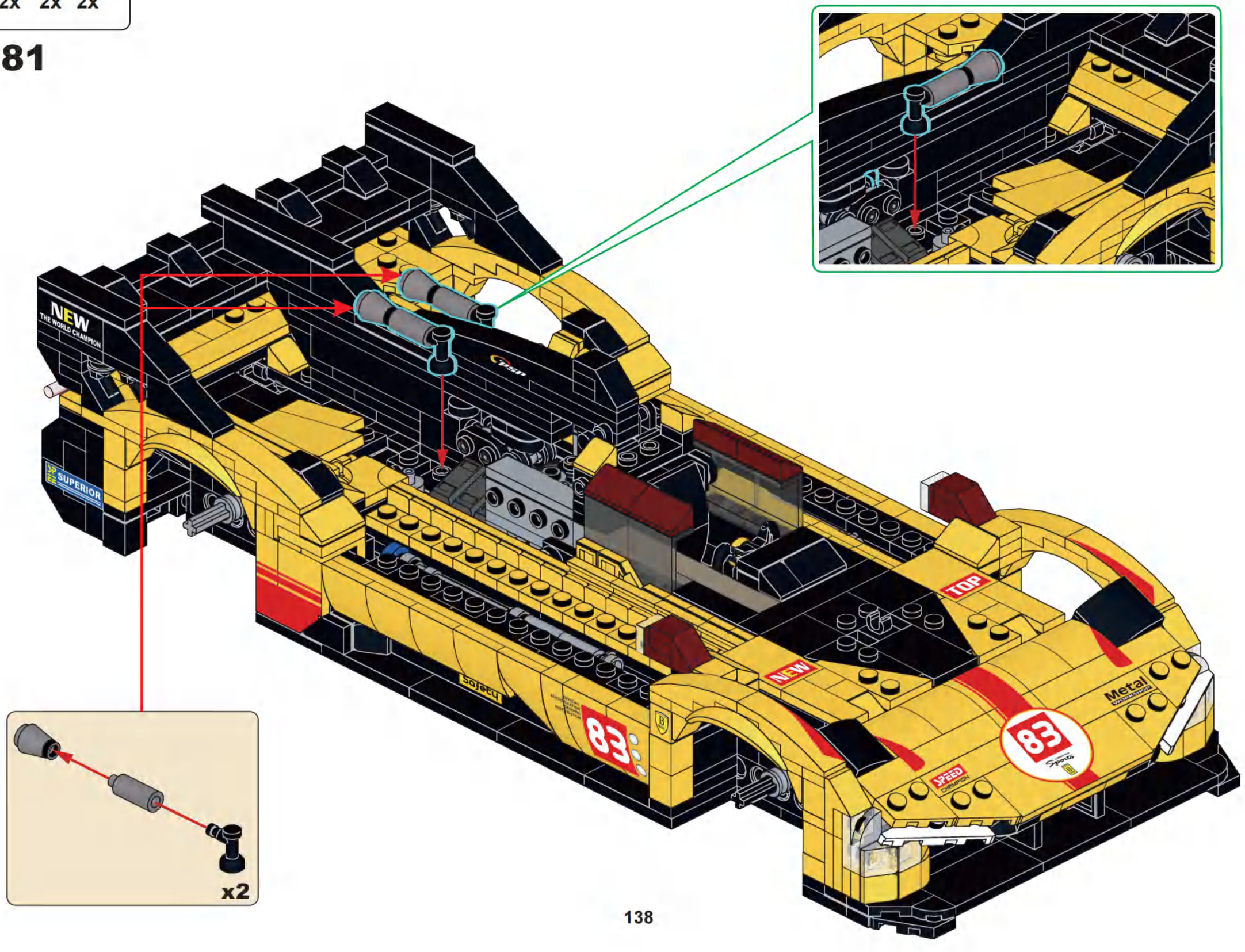
NEW
THE WORLD CHAMPION
SUPERIOR
Safety
83
TOP
NEW
Metal
83
Sports
SPEED CHAMPION
x2

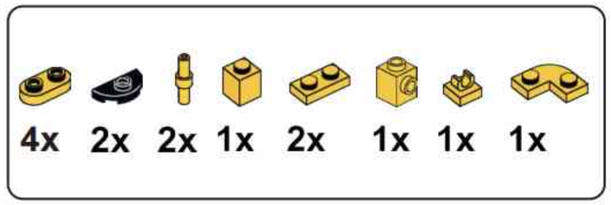

D82

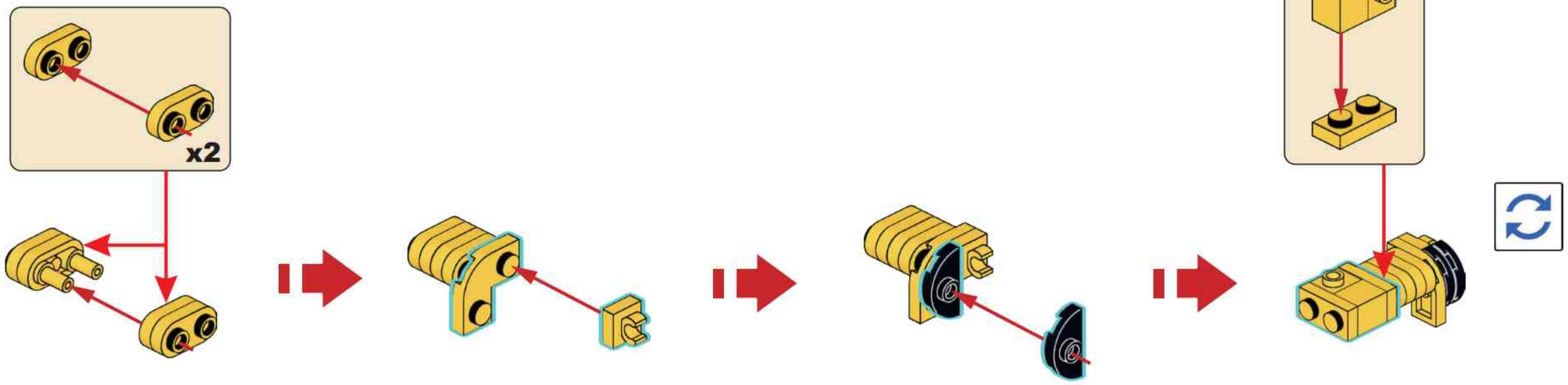

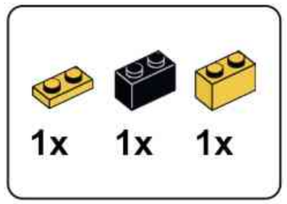

D83

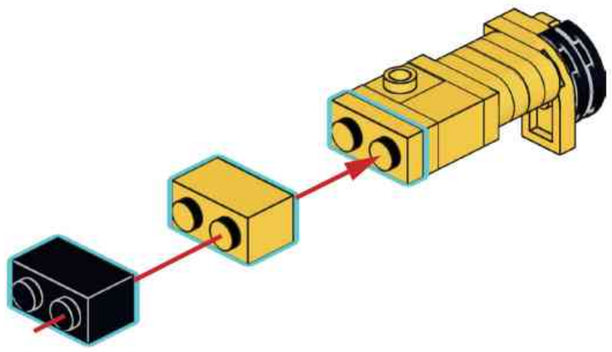

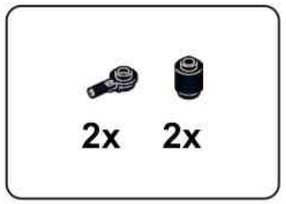

D84

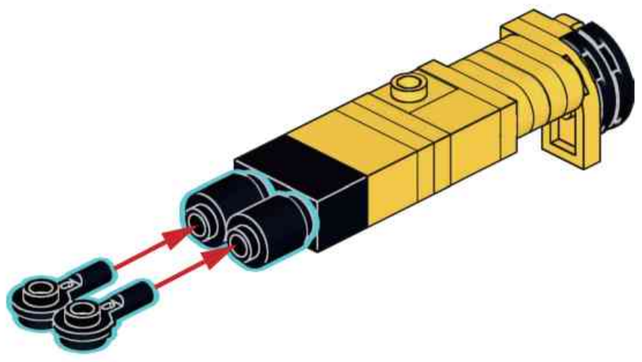

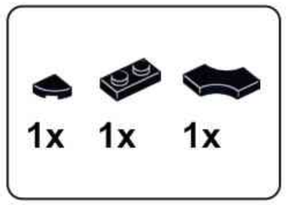

D85

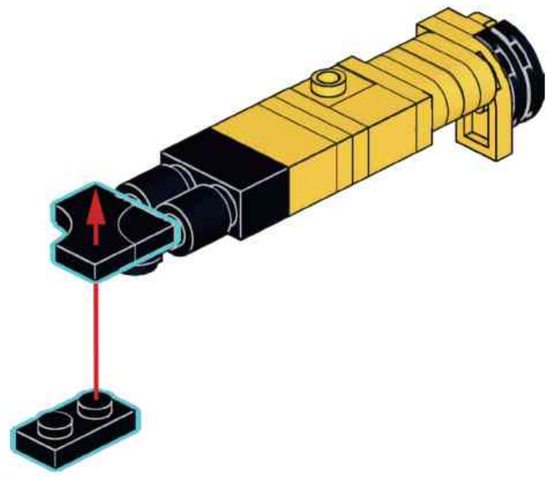

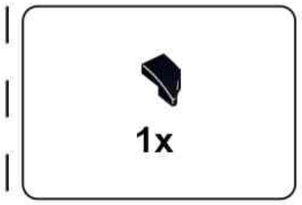

D86

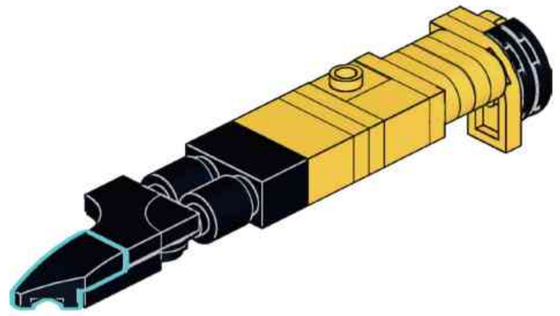

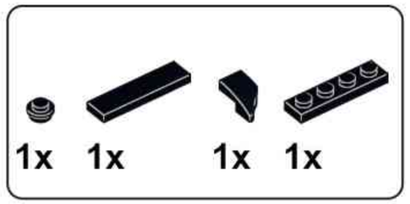

D87

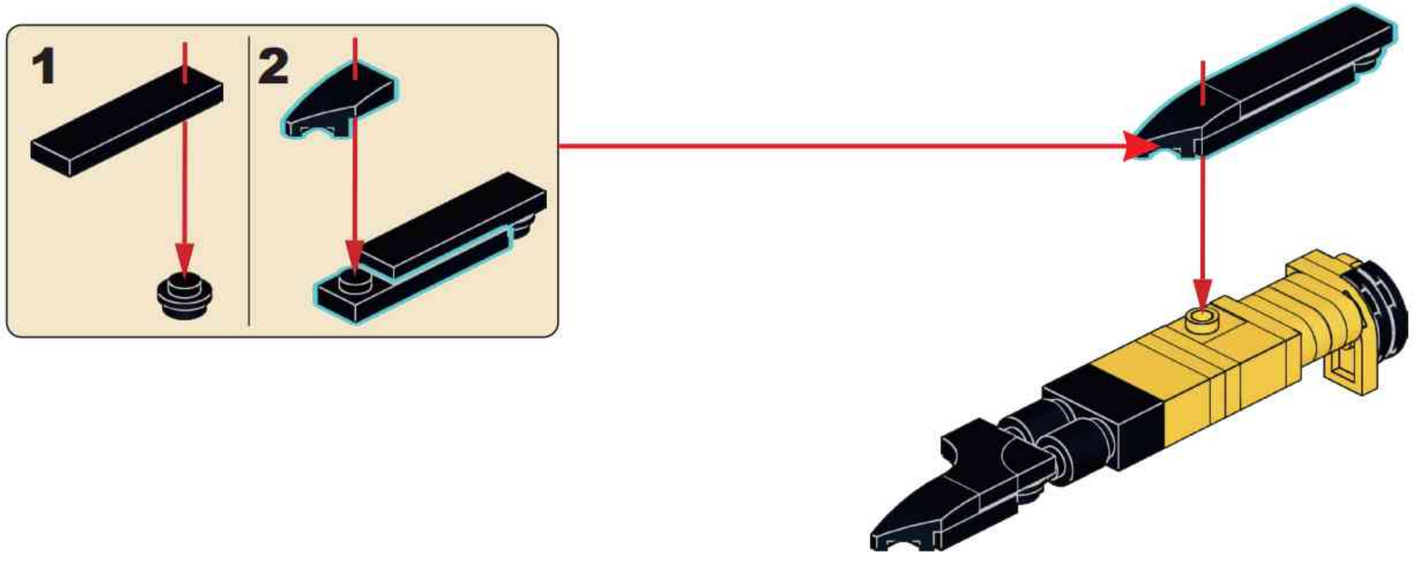

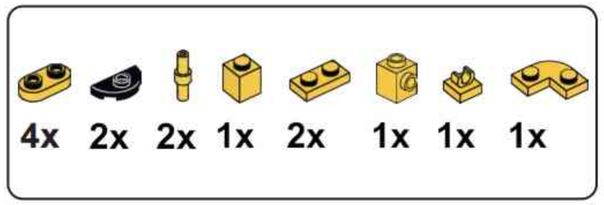

D88

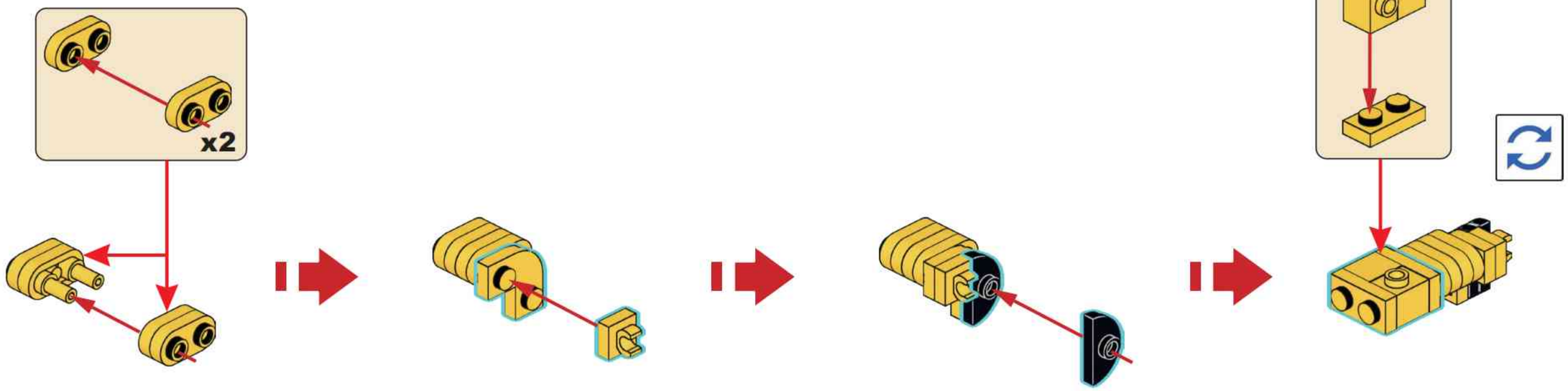

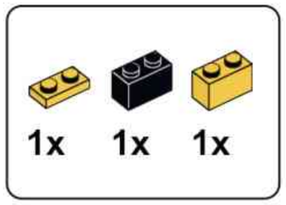

D89

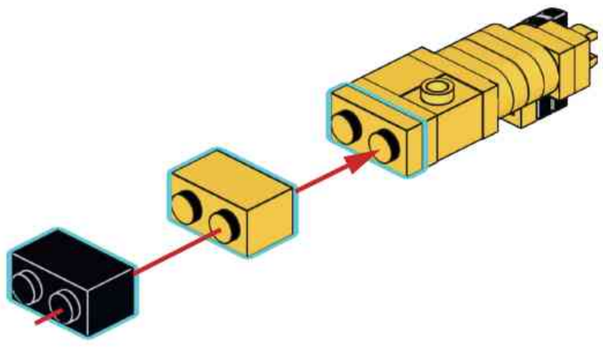

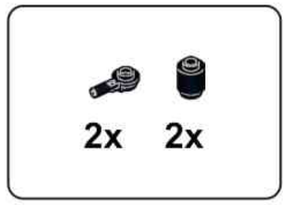

D90

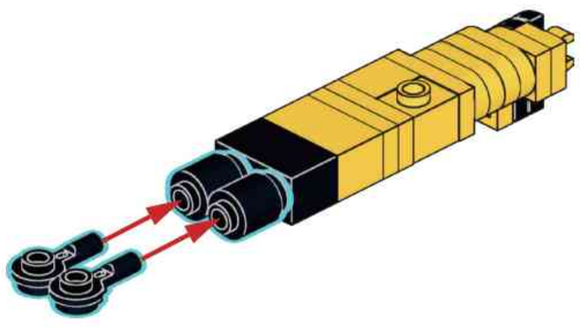

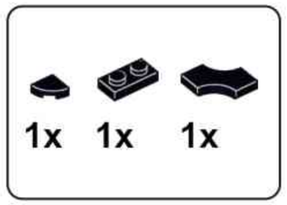

D91

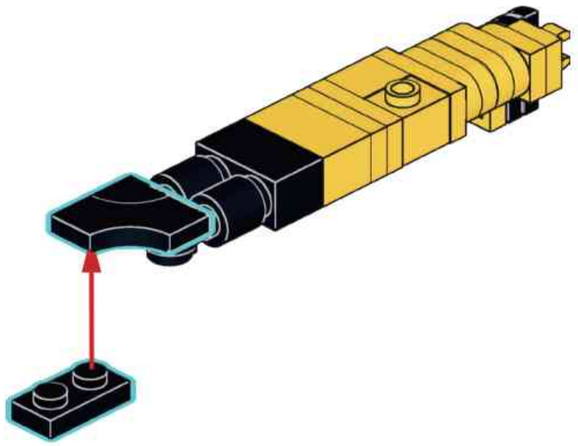

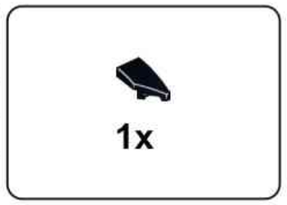

D92

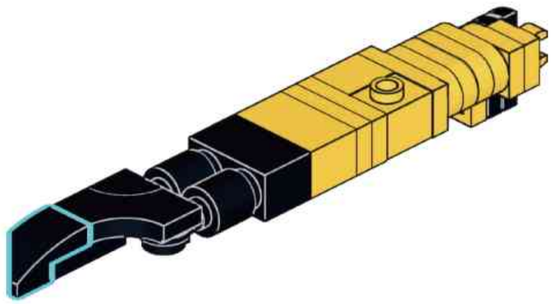

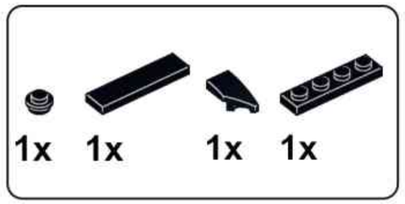

D93

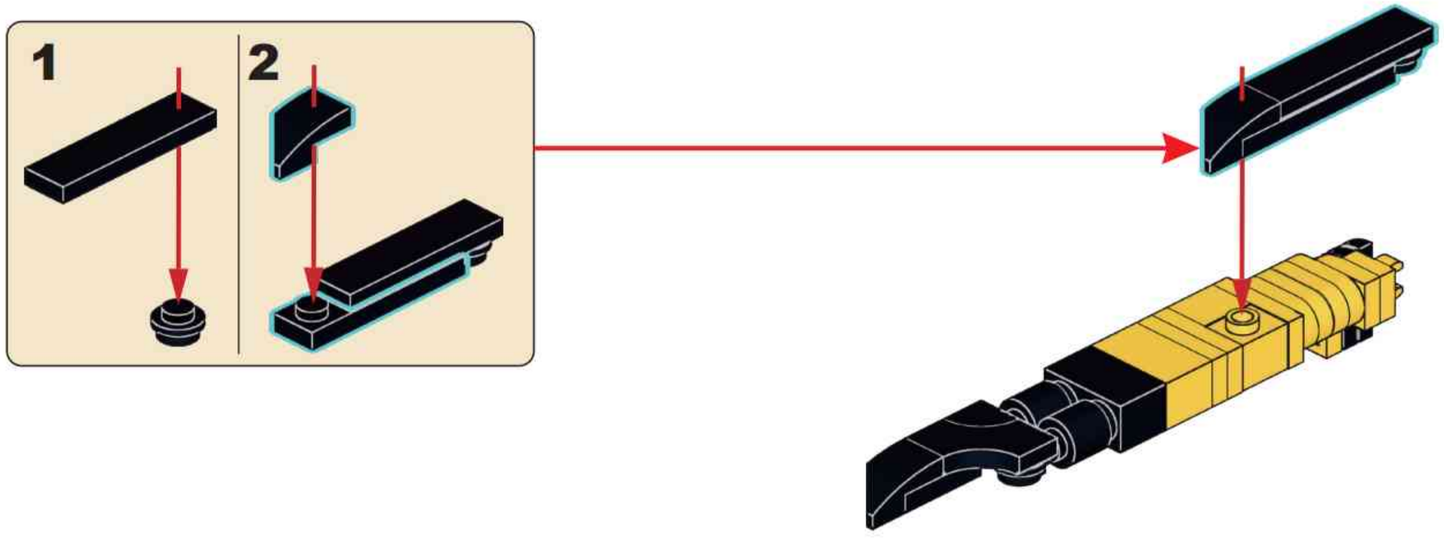

D94

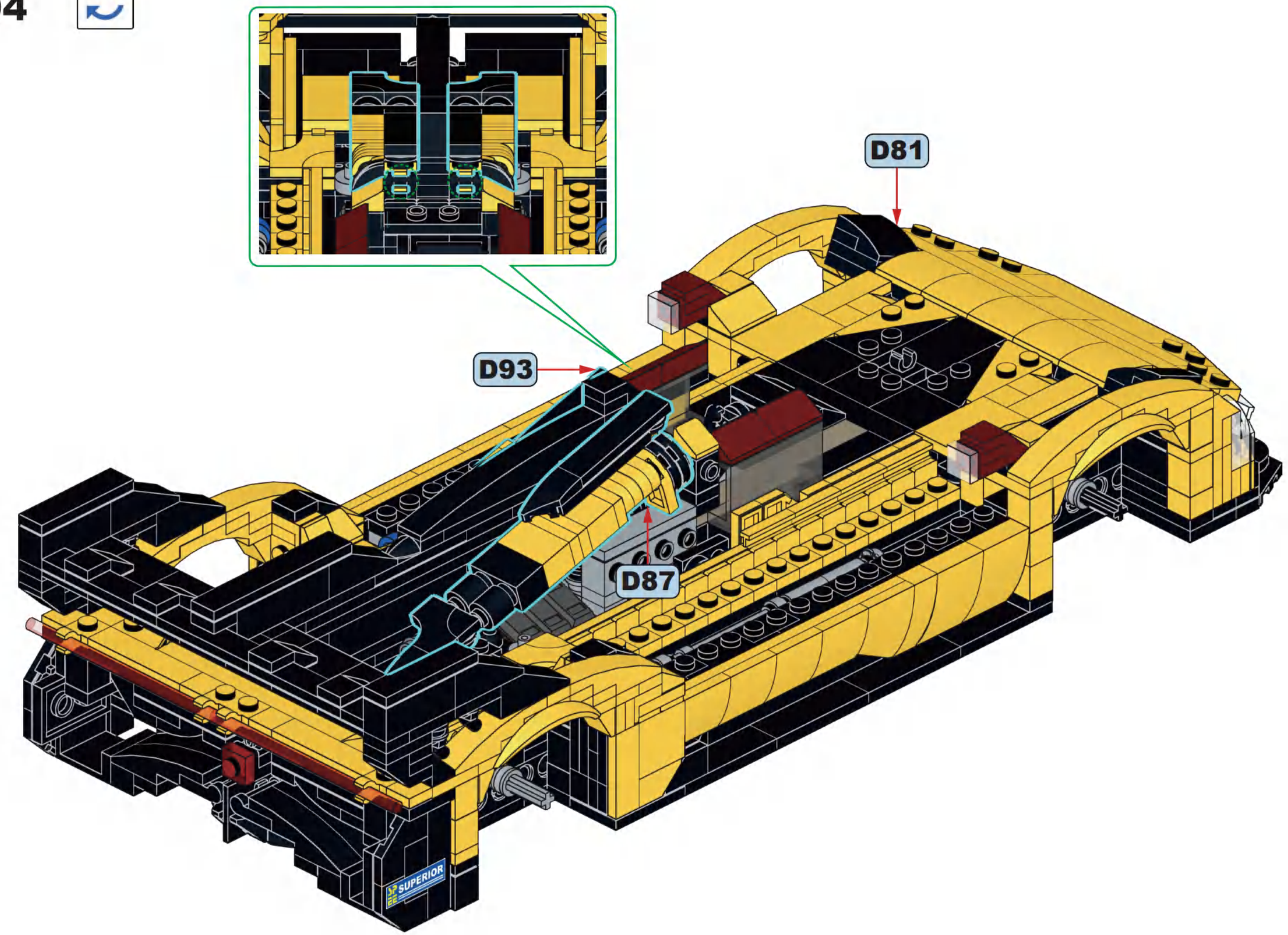

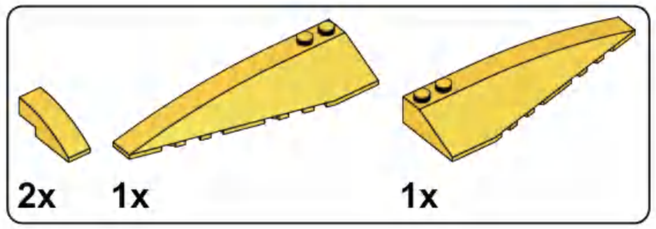
2x
1x
1x

D95

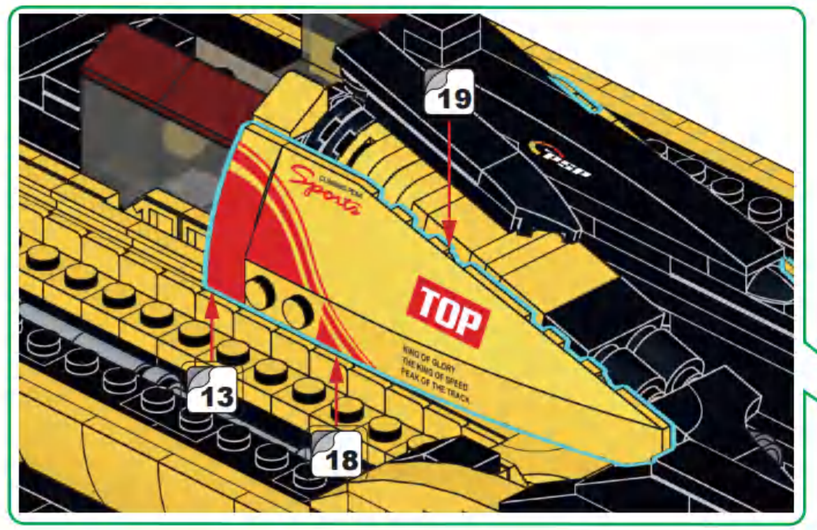
19
13
18
TOP
Sports

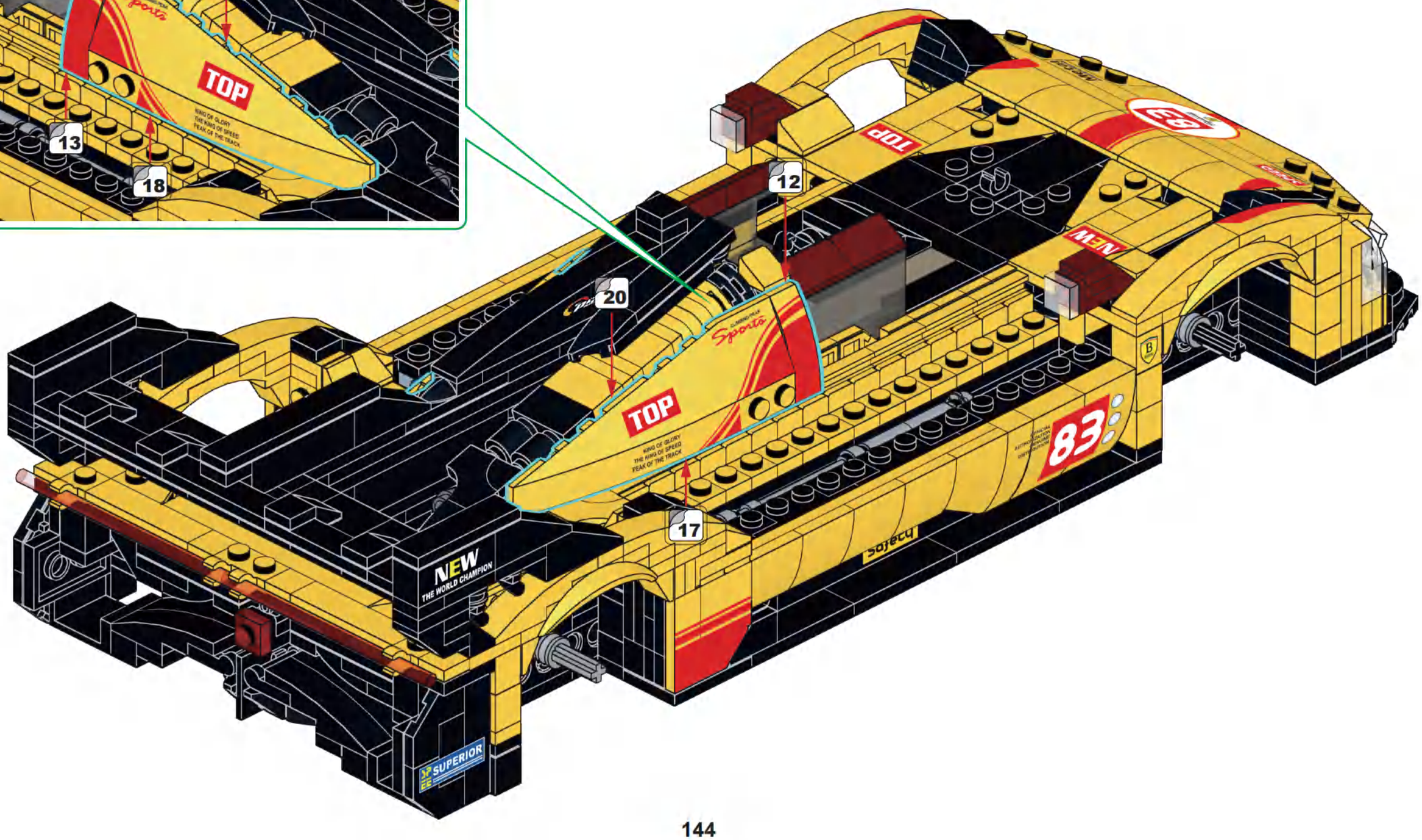
12
20
17
TOP
Sports
TOP
NEW
THE WORLD CHAMPION
SUPERIOR
83
Sojecy

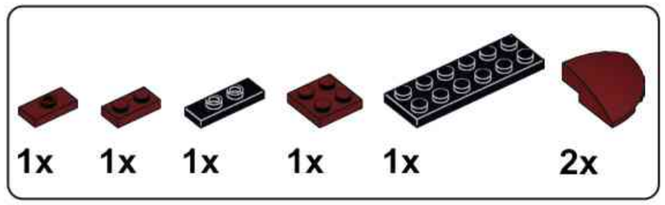
1x
1x
1x
1x
1x
2x

D96

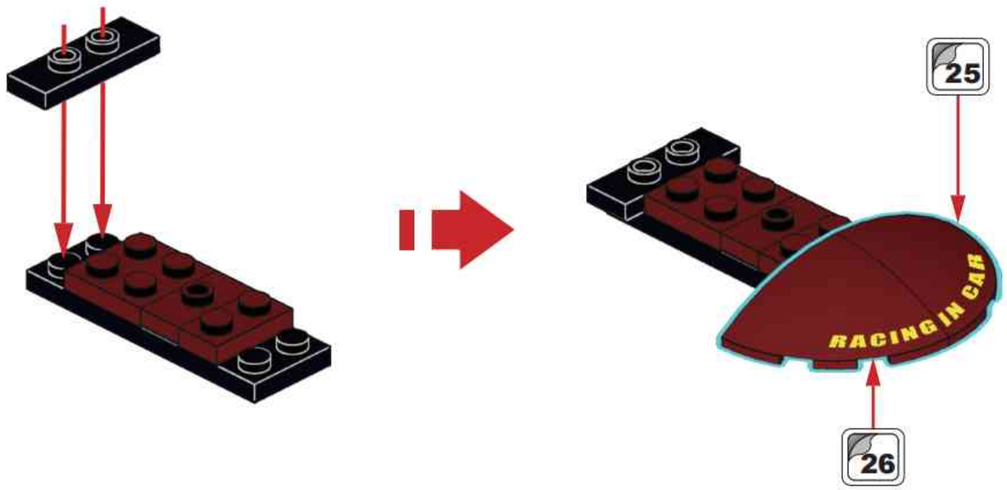
25
RACING IN CAR
26

1x
1x
1x
2x
1x
2x

D97

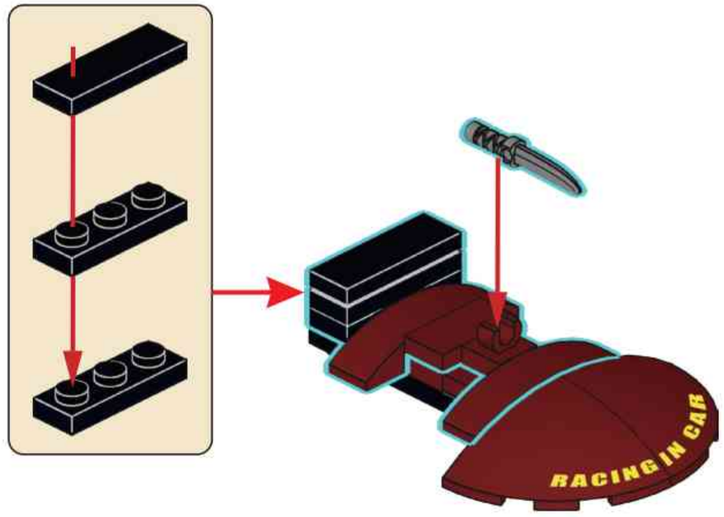
RACING IN CAR

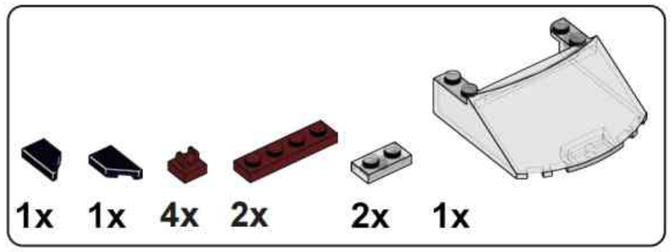
1x
1x
4x
2x
2x
1x

D98

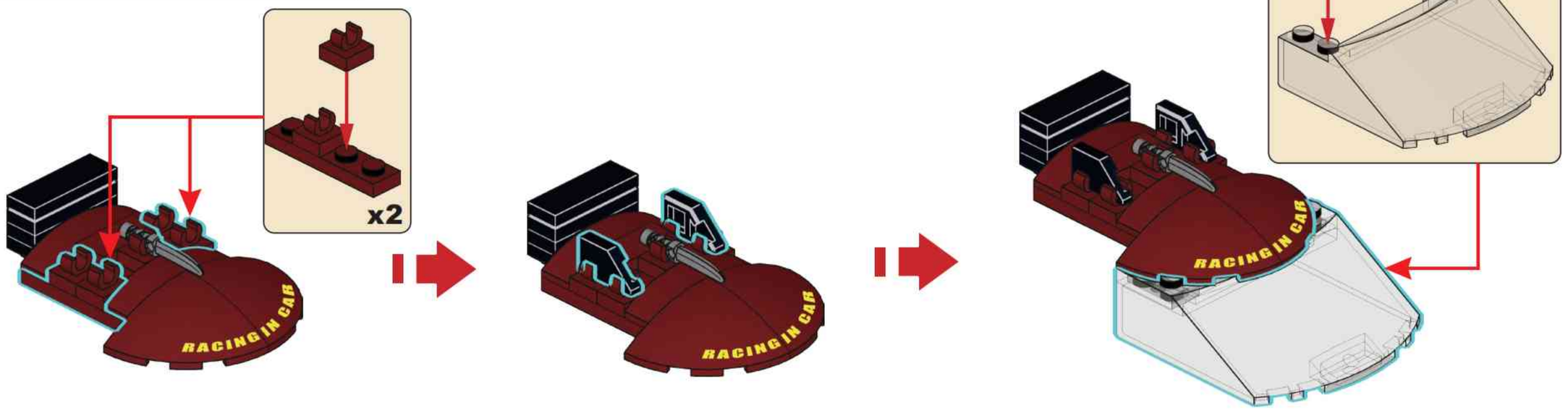
x2
RACING IN CAR
RACING IN CAR
RACING IN CAR

D99

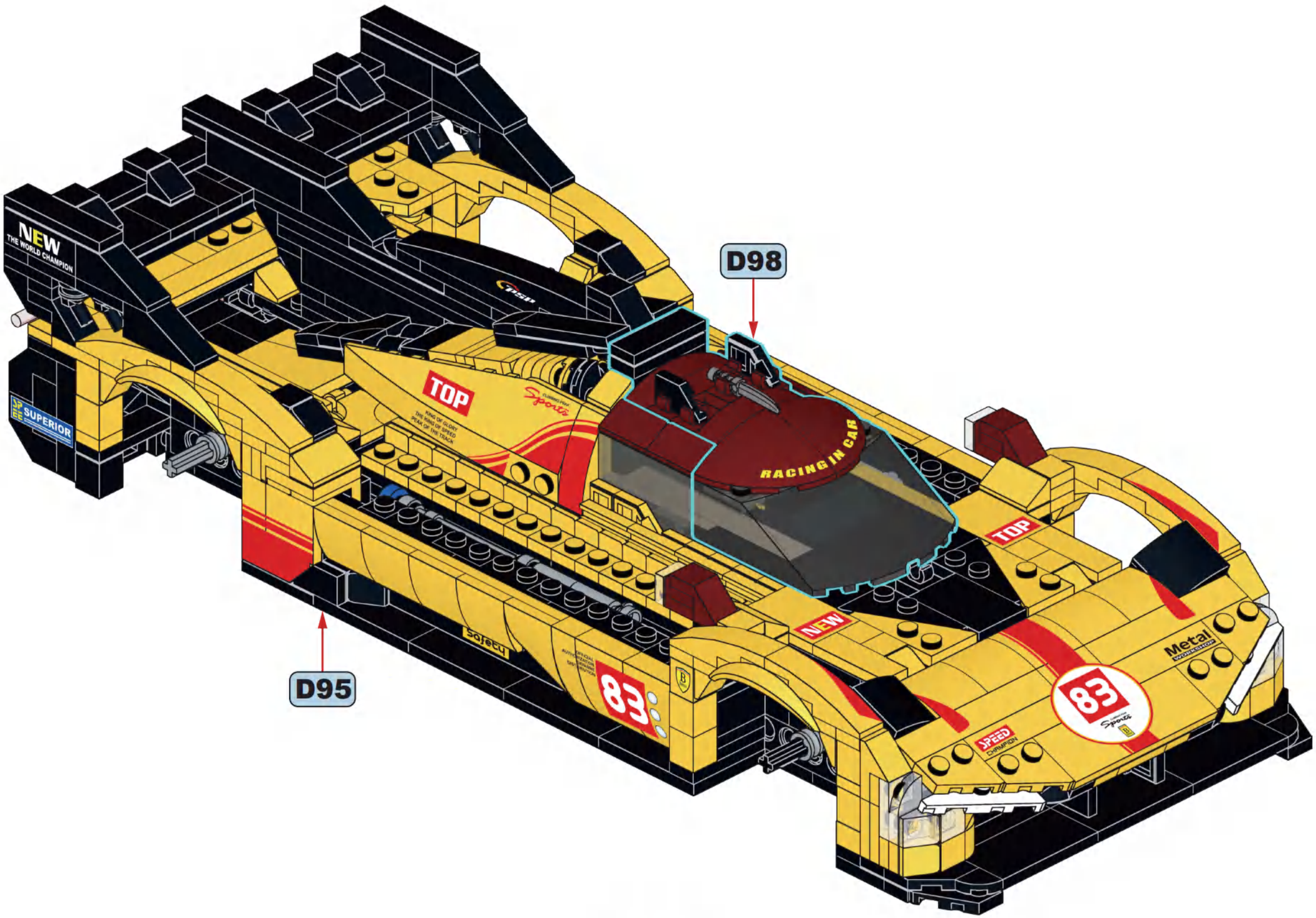
D98
D95
NEW
THE WORLD CHAMPION
SUPERIOR
TOP
Sports
RACING IN CAR
Safety
83
Metal
SPEED
CHAMPION

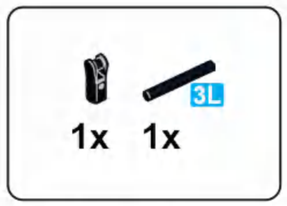
3L
1x 1x

D100

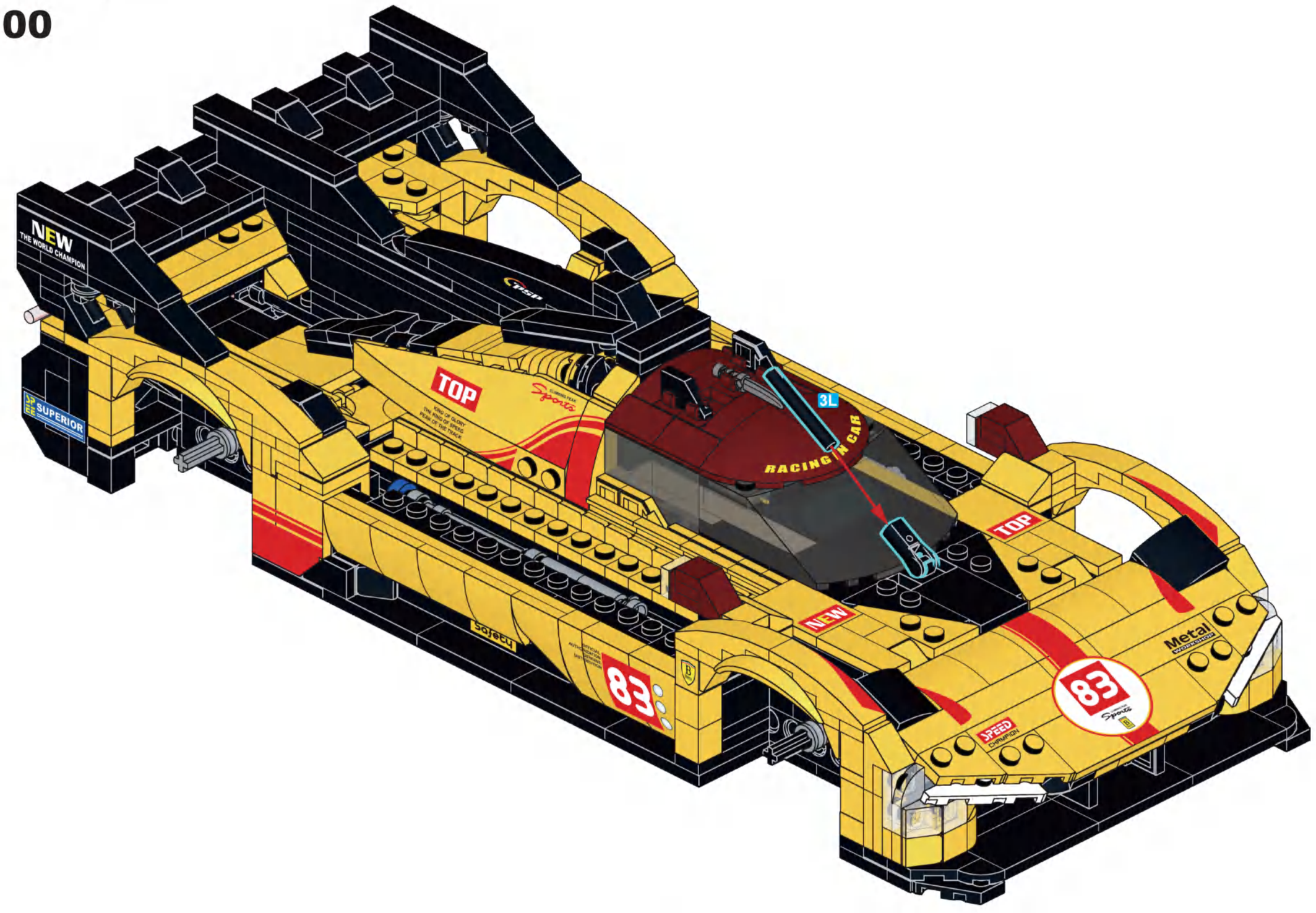
NEW
THE WORLD CHAMPION
SUPERIOR
TOP
Sports
3L
RACING
TOP
NEW
Metal
83
83
SPEED
CHAMPION
Safety

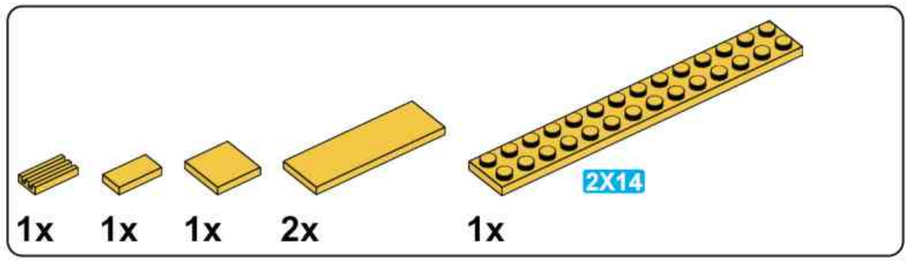

D101

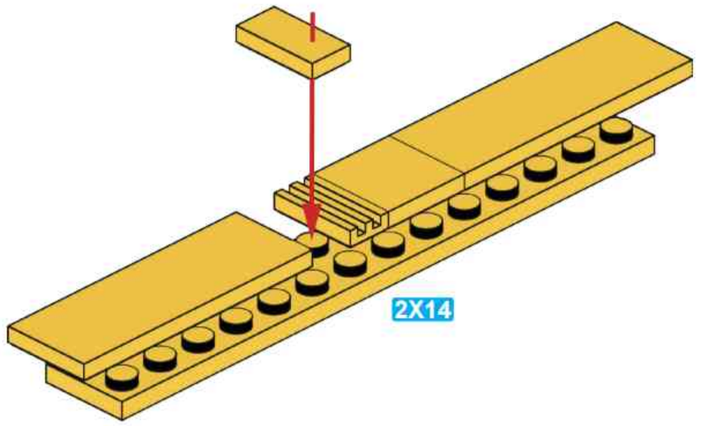

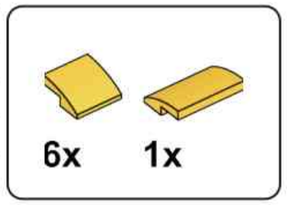

D102

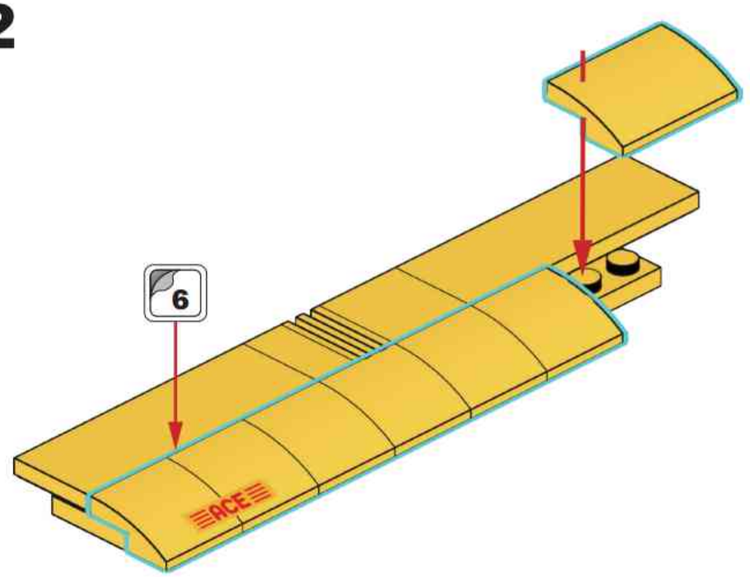

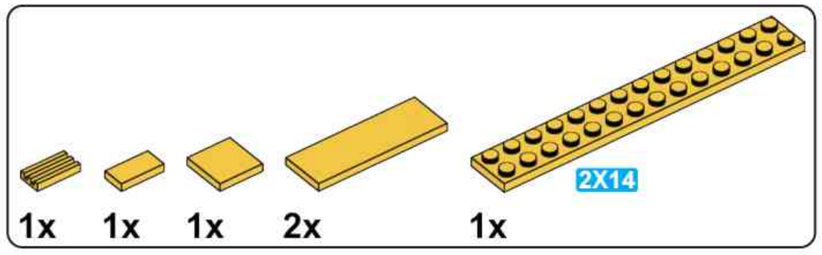

D103

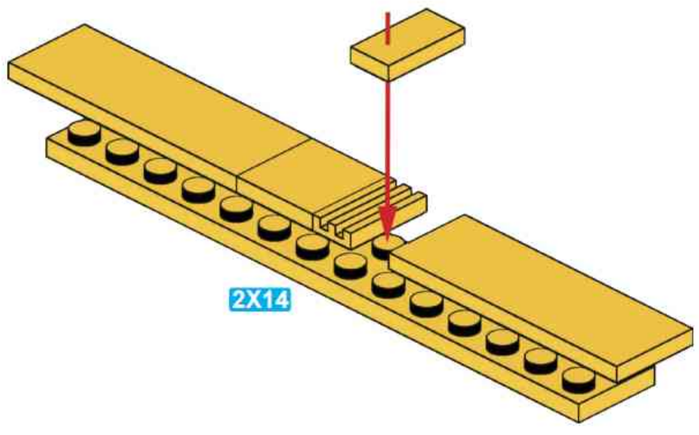

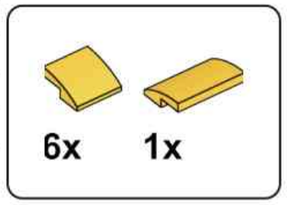

D104

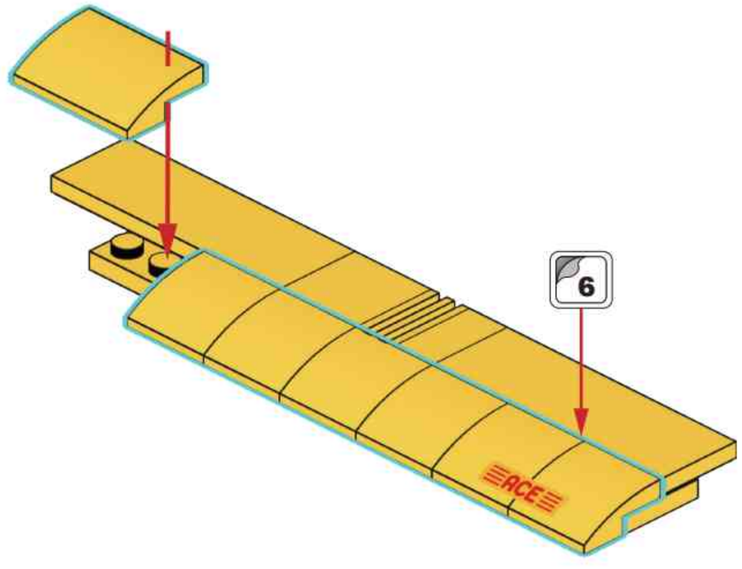

D105

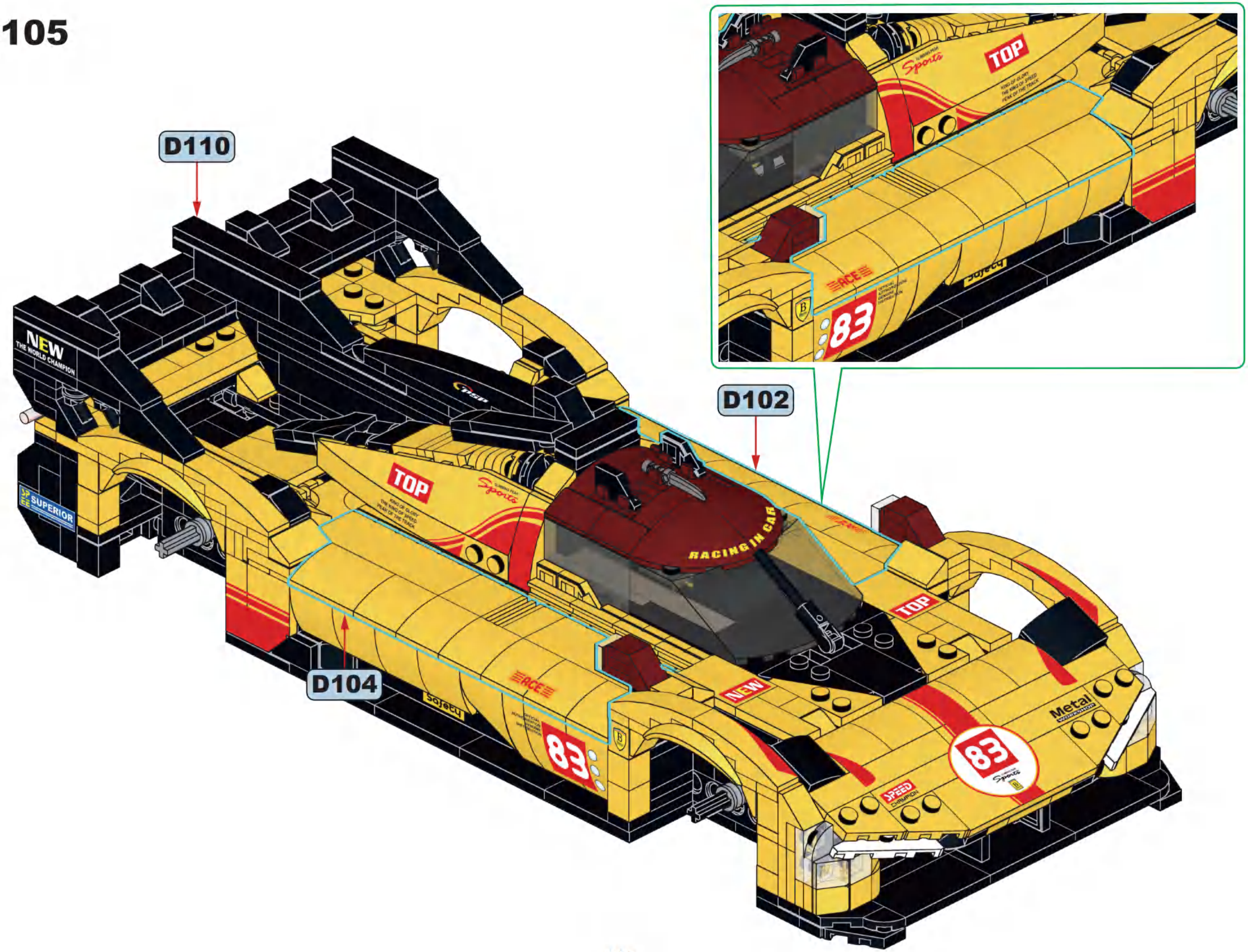
D110
D102
D104
NEW
THE WORLD CHAMPION
SUPERIOR
TOP
Sports
RACING IN CAR
ACE
Safety
83
Metal
SPEED
CHAMPION

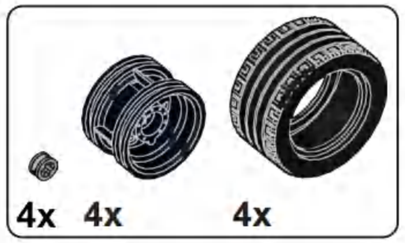
4x
4x
4x

D102

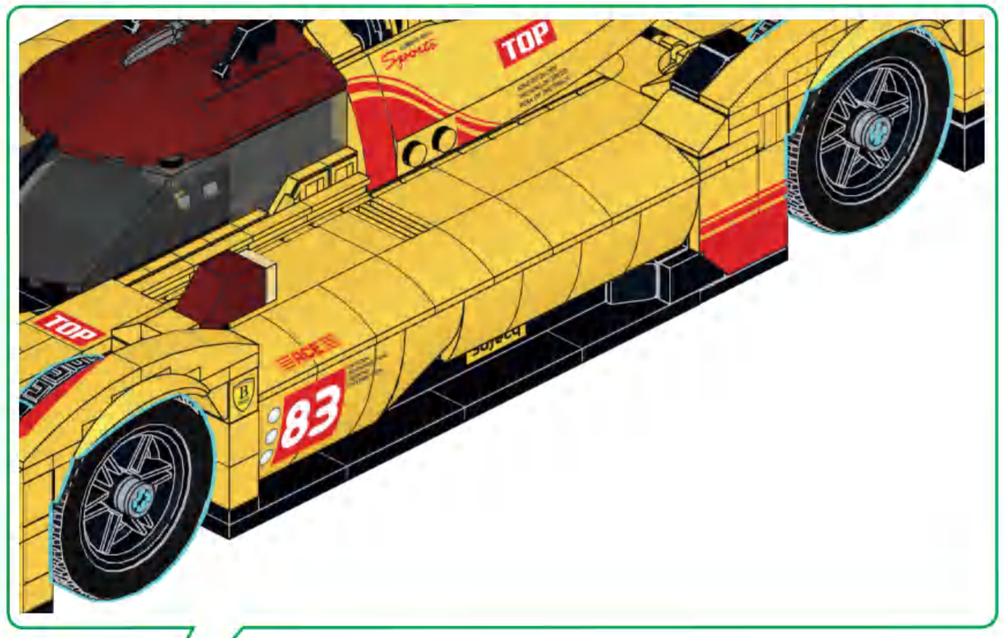
TOP
Sports
TOP
83

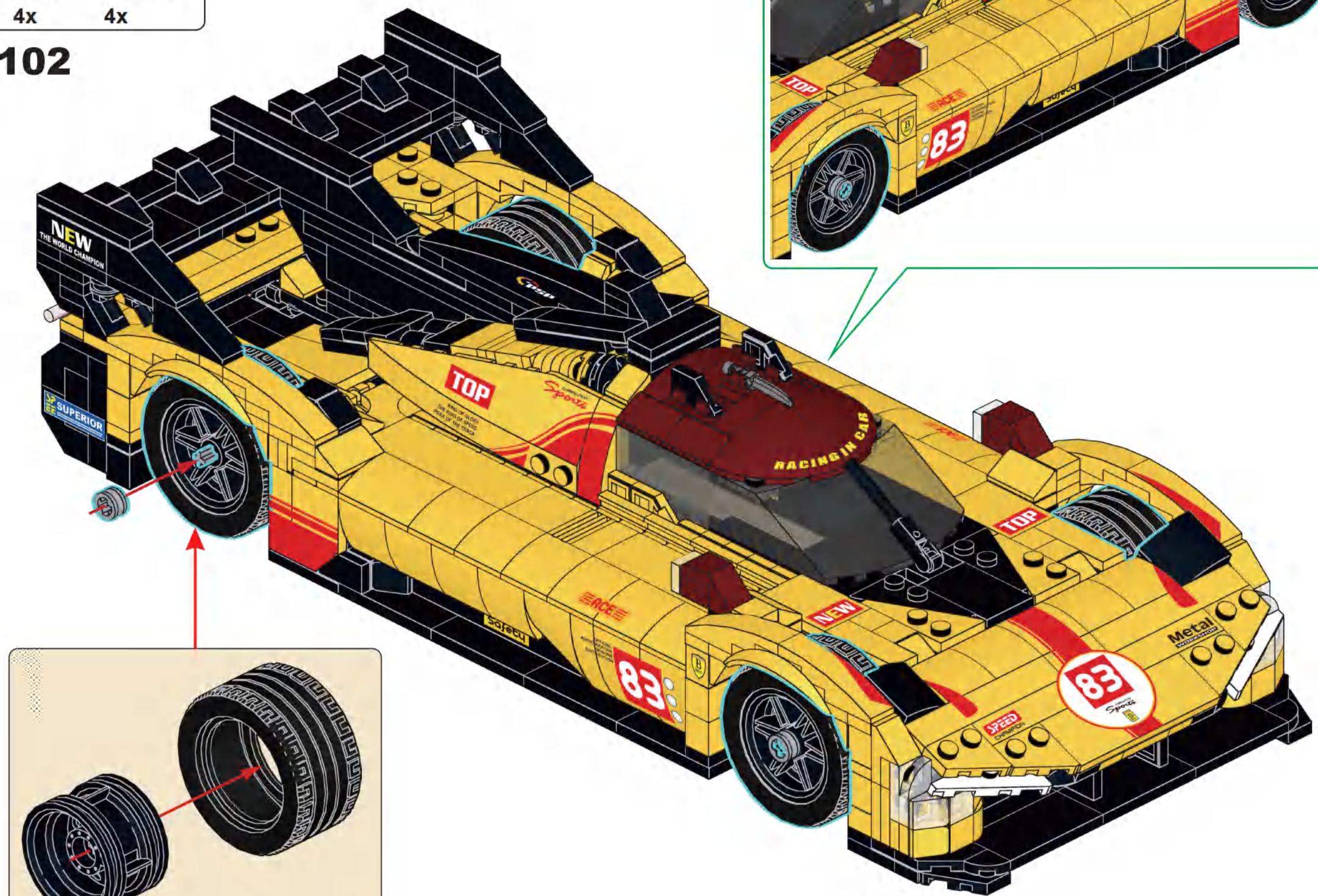
NEW
THE WORLD CHAMPION
SUPERIOR
TOP
Sports
RACING IN CAR
TOP
NEW
Metal
83
83
Sports
SPEED
CHAMPION

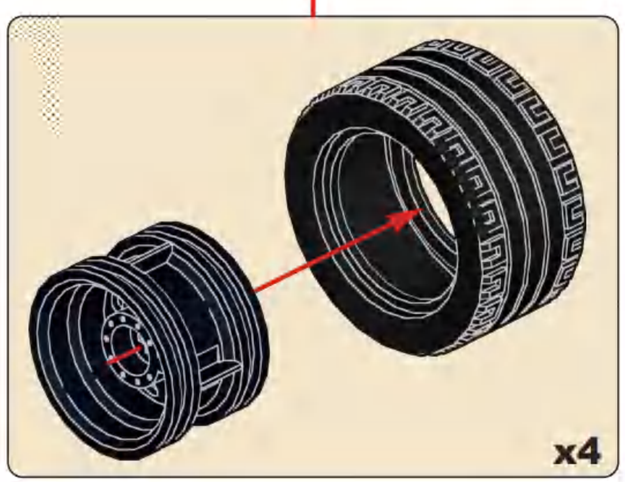
x4

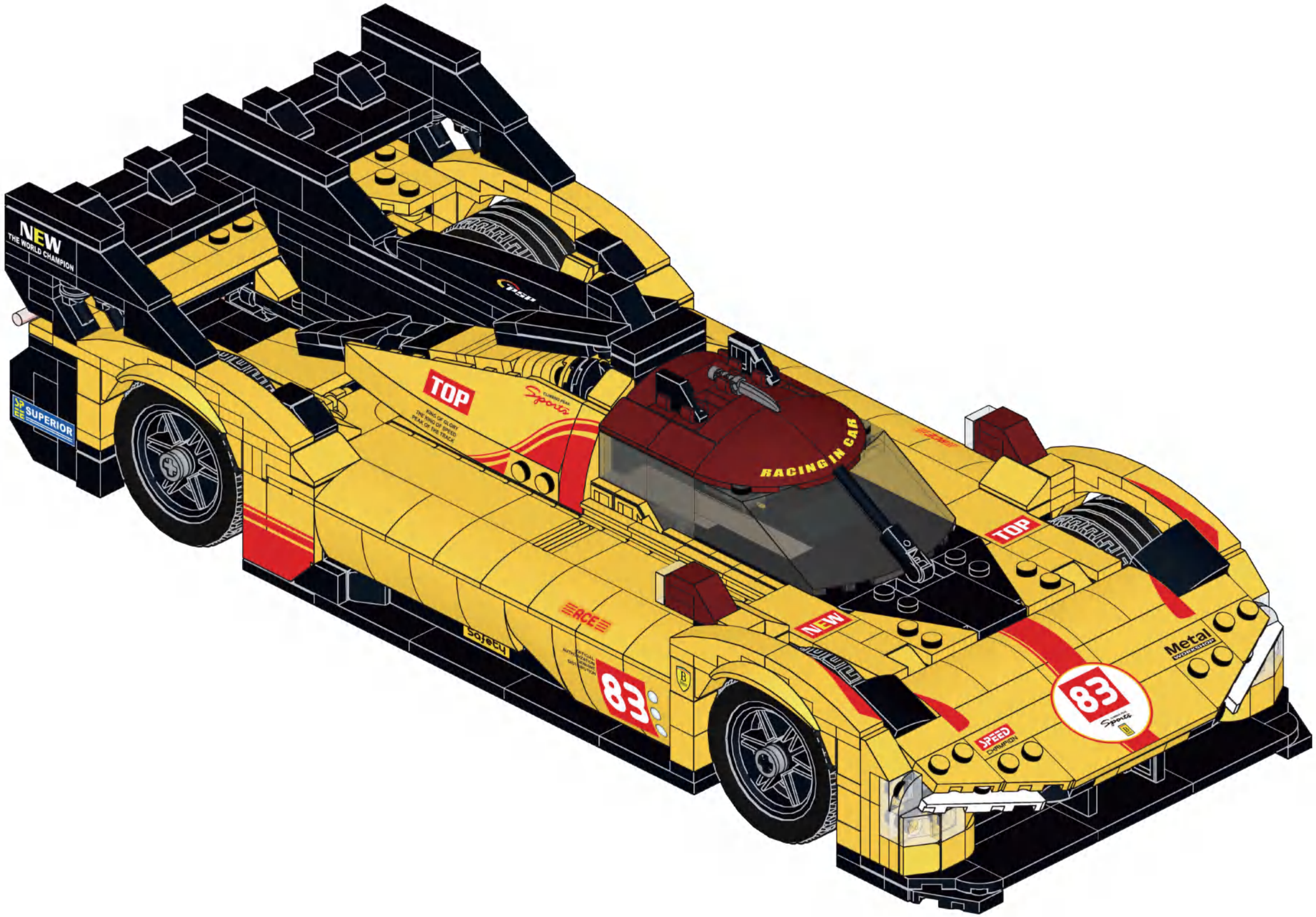
NEW
THE WORLD CHAMPION
SUPERIOR
TOP
RACING IN CAR
TOP
NEW
83
83
Metal
SPEED
CHAMPION

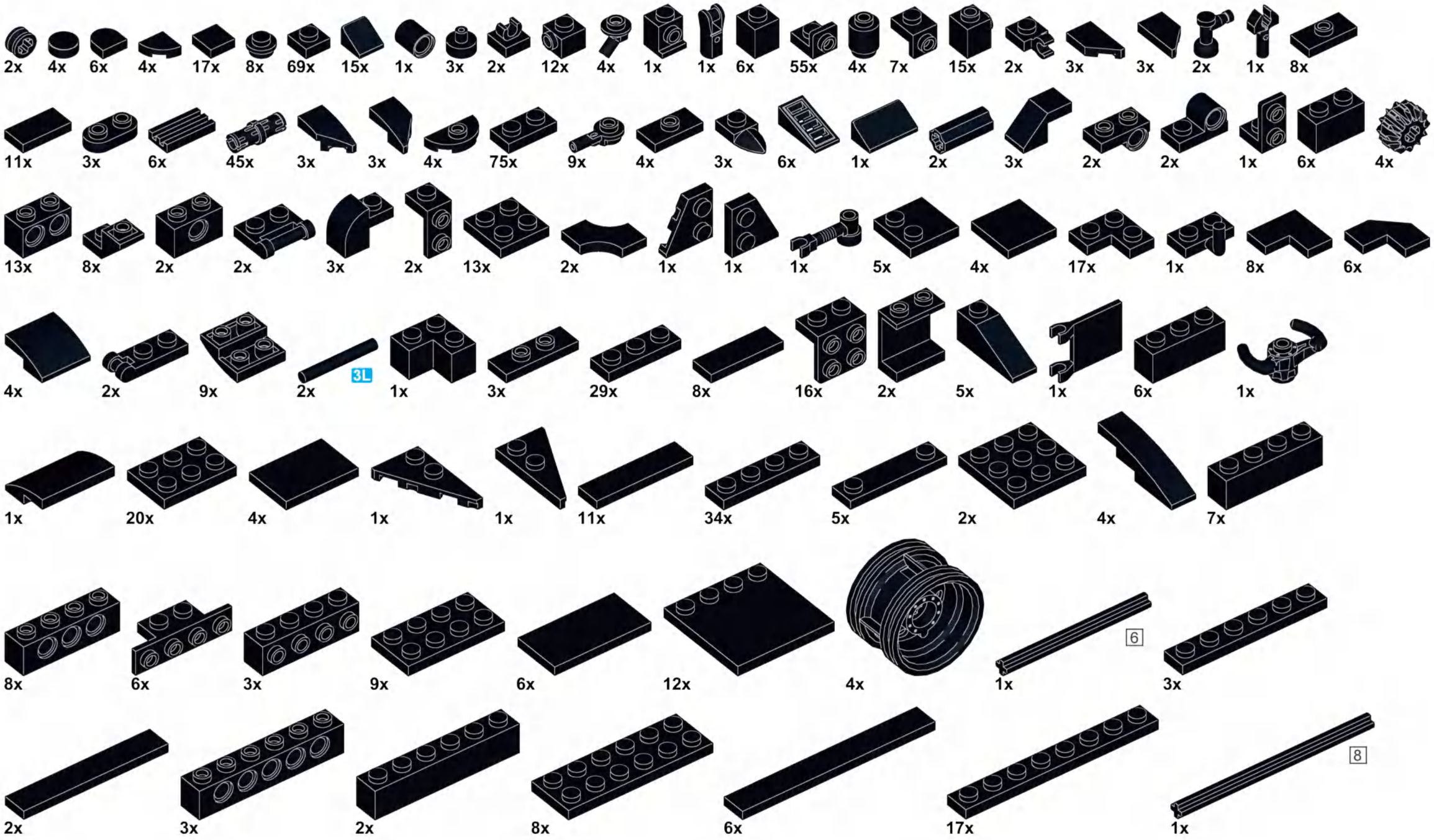
2x
4x
6x
4x
17x
8x
69x
15x
1x
3x
2x
12x
4x
1x
1x
6x
55x
4x
7x
15x
2x
3x
3x
2x
1x
8x
11x
3x
6x
45x
3x
3x
4x
75x
9x
4x
3x
6x
1x
2x
3x
2x
2x
1x
6x
4x
13x
8x
2x
2x
3x
2x
13x
2x
1x
1x
1x
5x
4x
17x
1x
8x
6x
4x
2x
9x
2x
3L
1x
3x
29x
8x
16x
2x
5x
1x
6x
1x
1x
20x
4x
1x
1x
11x
34x
5x
2x
4x
7x
8x
6x
3x
9x
6x
12x
4x
6
1x
3x
2x
3x
2x
8x
6x
2x
17x
8
1x

1x

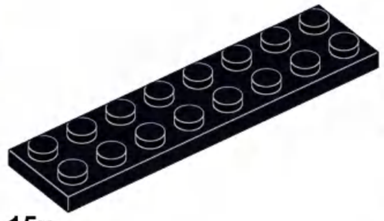
15x

2x

2x

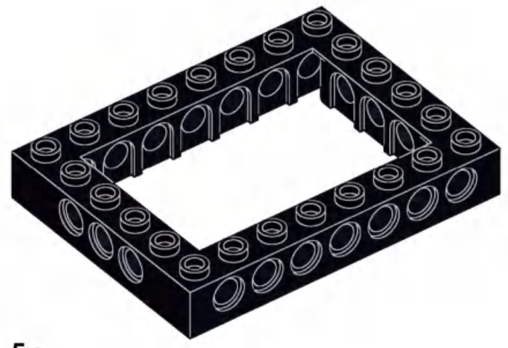
5x

5x

1x

3x

3x

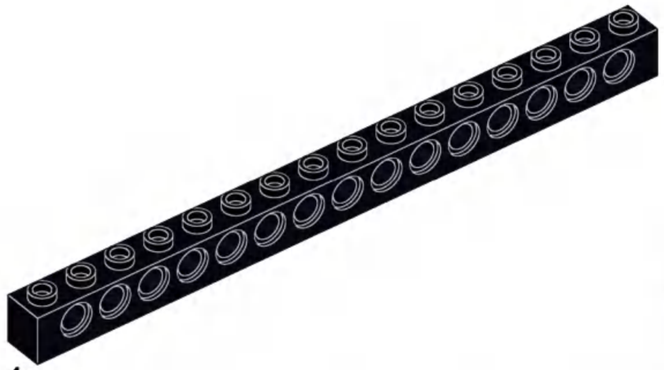
4x

2x

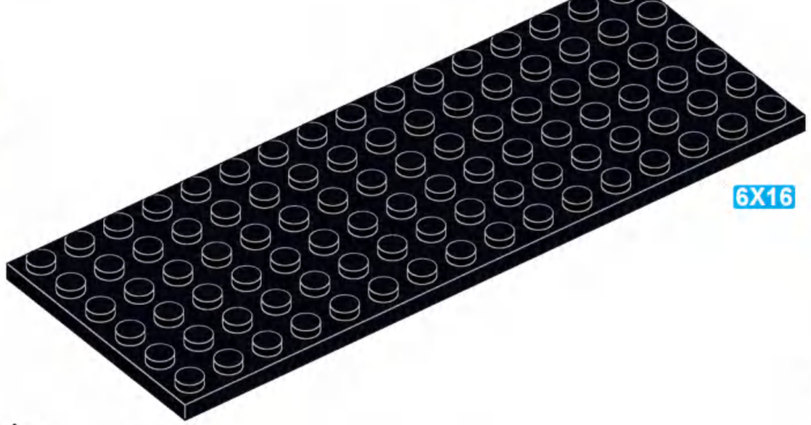

1x

2x

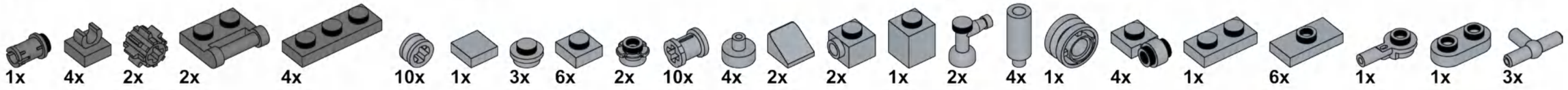

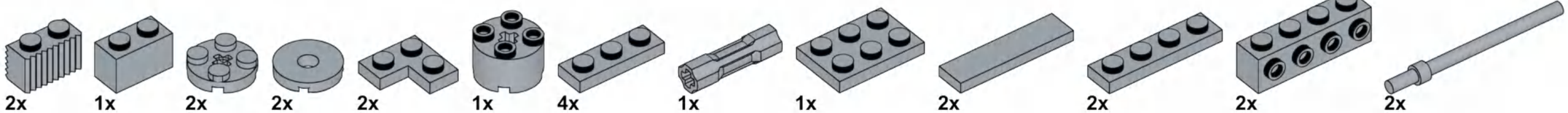

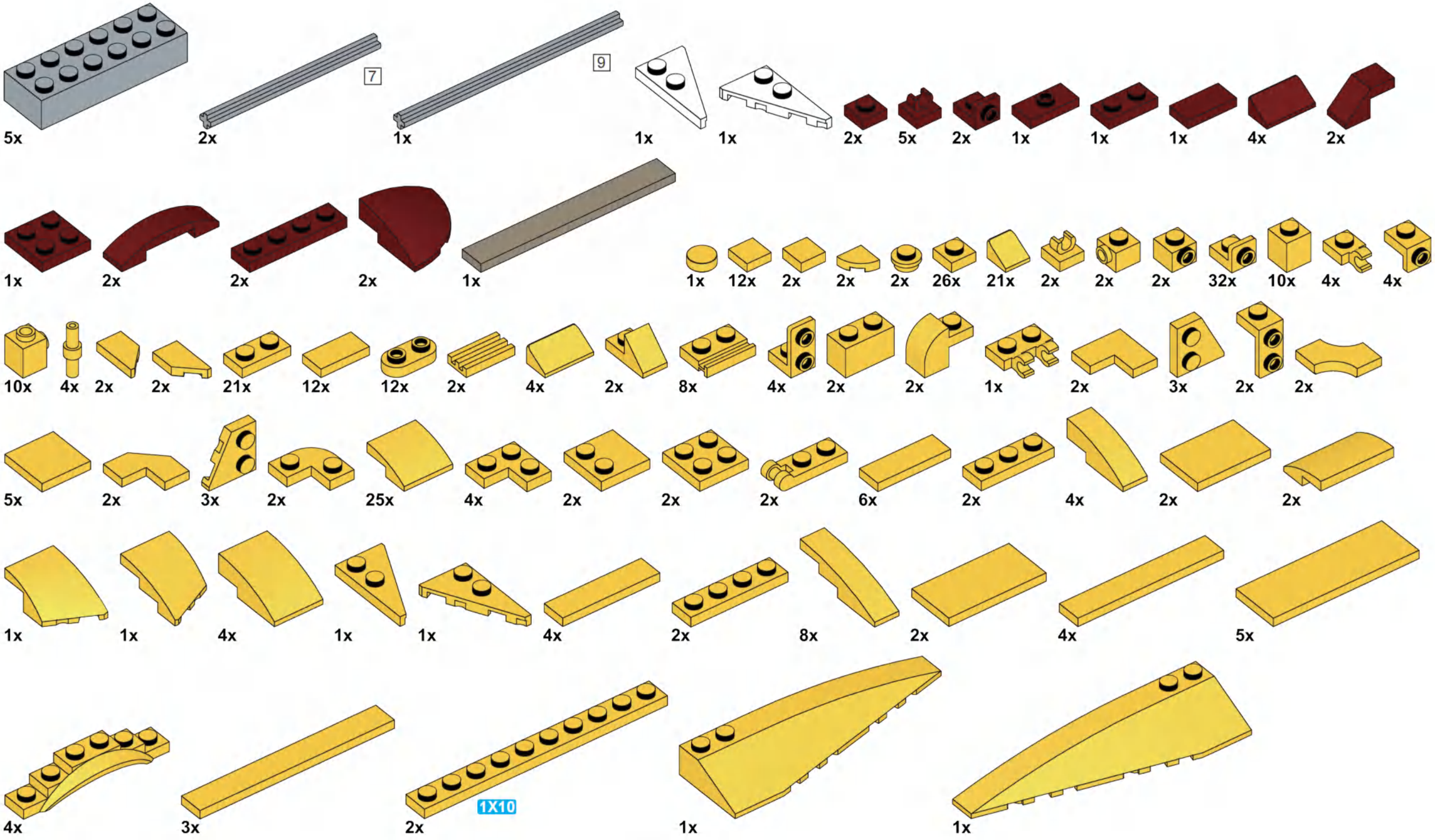
5x
2x
7
1x
9
1x
1x
2x
5x
2x
1x
1x
1x
4x
2x
1x
2x
2x
2x
1x
1x
12x
2x
2x
2x
26x
21x
2x
2x
2x
32x
10x
4x
4x
10x
4x
2x
2x
21x
12x
12x
2x
4x
2x
8x
4x
2x
2x
1x
2x
3x
2x
2x
5x
2x
3x
2x
25x
4x
2x
2x
2x
6x
2x
4x
2x
2x
1x
1x
4x
1x
1x
4x
2x
8x
2x
4x
5x
4x
3x
1X10
2x
1x
1x

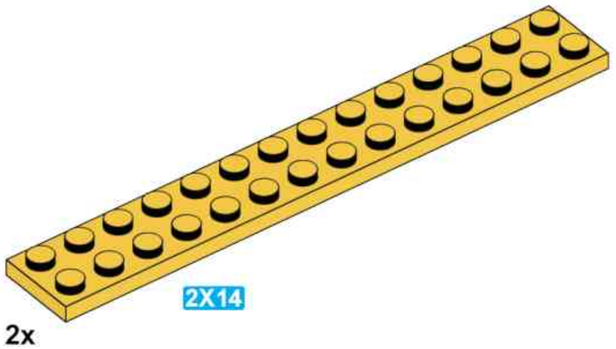

2x

2x

1x

3x

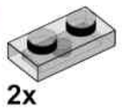

2x

4x

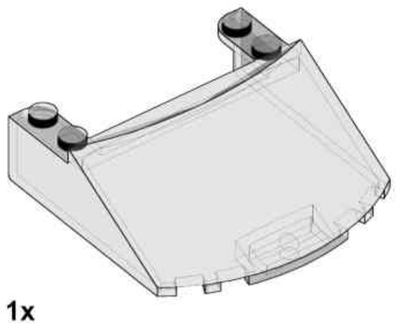

1x

2x

4x

4x

4x

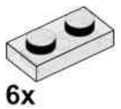

6x

1x

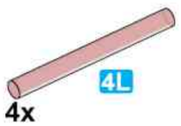

4x

6x

2x

2x

1x

4x

Reobrix

NO.11042

TECHNOLOGIE