Reobrix

NO.66501

RAMEN

日系街景建築シリーズ

STYLE 1
モデリング

LIGHTING EFFECT

STYLE 2
モデリング

ラーメンや屋

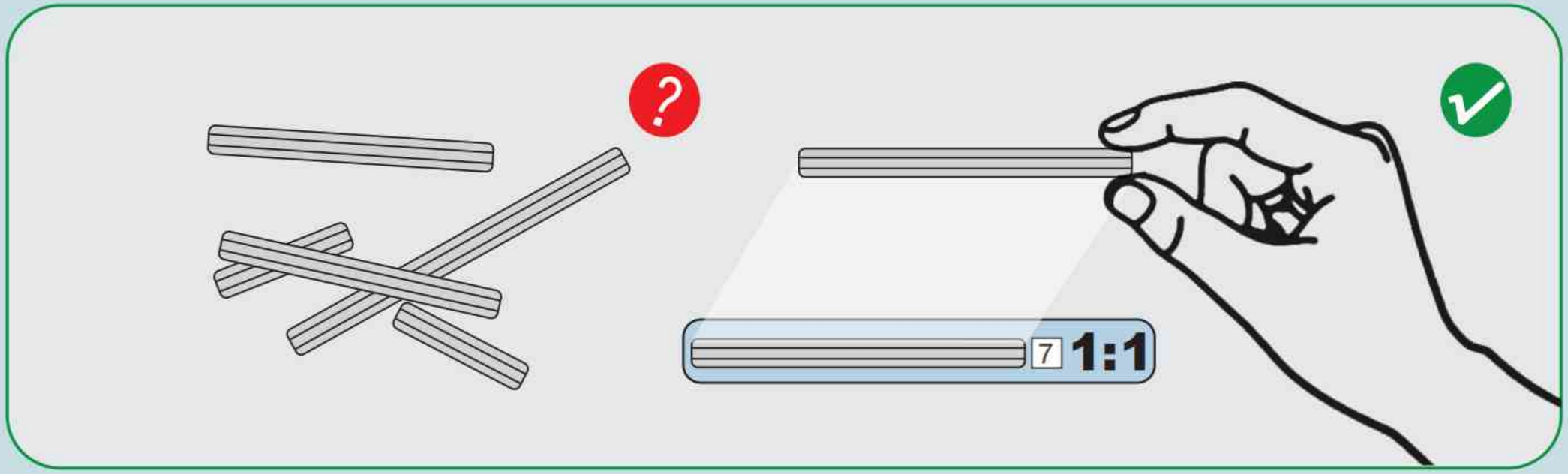
?
7
1:1

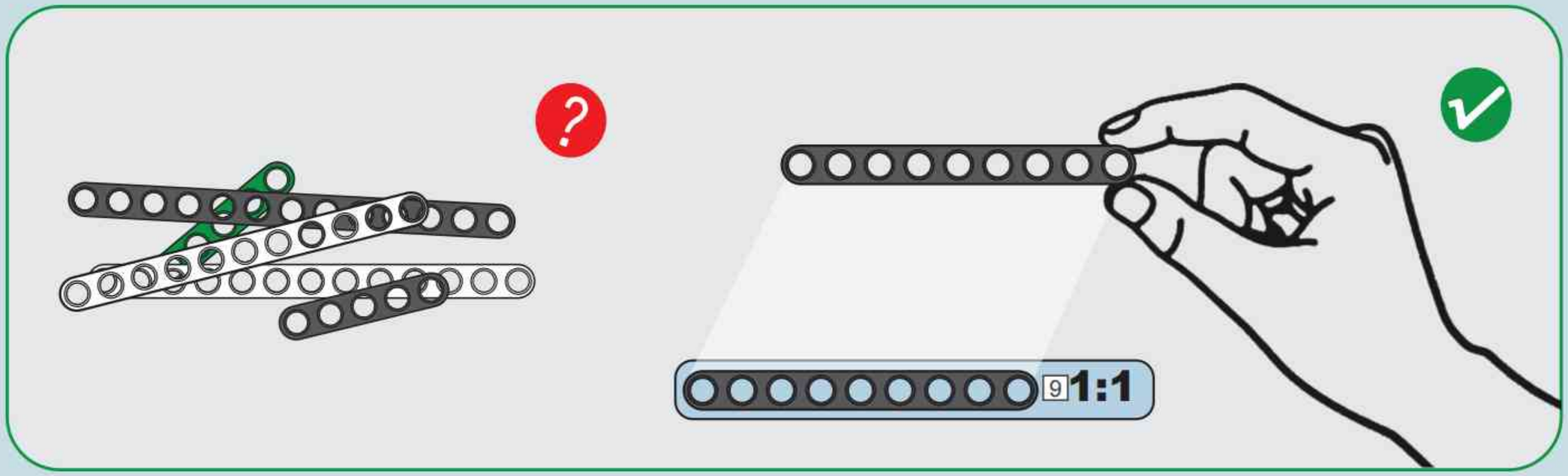
?
9
1:1

USER INSTRUCTION

Please read the following carefully before installing the lights.

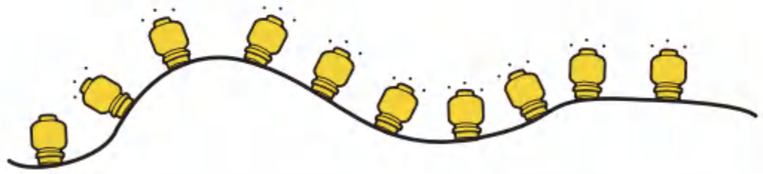

Before installation, please connect to a power supply below 5V and test the lights to ensure everything is functioning properly. If the lights do not work, please refer to troubleshooting guide or contact us.

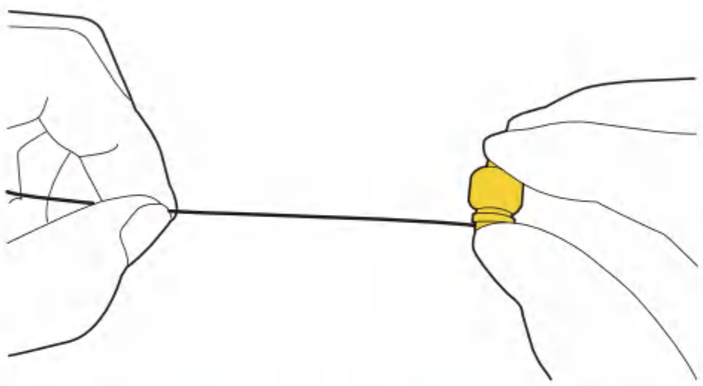

LED components are delicate, so please take extra care when installing, no hard pulling, no bending or shaking.

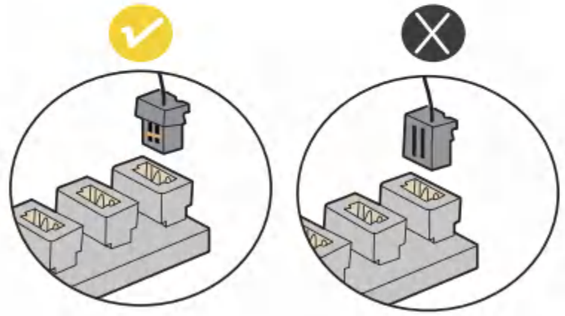

Connectors can be inserted into ports of the expansion board in only one certain way. Make sure the plug's direction is correct before connecting.

Tips: if plug doesn't fit easily into a port, don't force it.

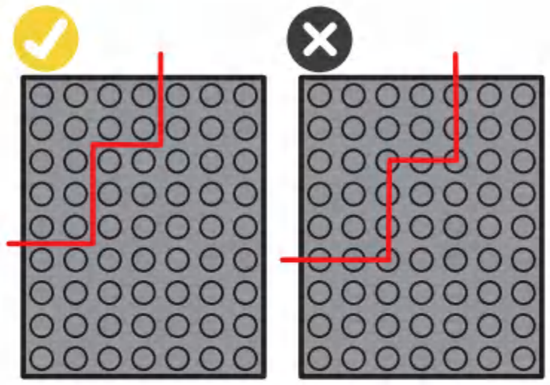

Hide the spare wire under the bricks: when installing. please make sure that the wire is laid between two studs of the bricks, but not pressed by the bricks directly.

TROUBLESHOOTING

Due to their small size, lighting accessories are susceptible to damage during installation. Common causes of failure include:

If you have checked each string of lights according to the guide above and the lights are still not working, please contact our customer service for assistance.

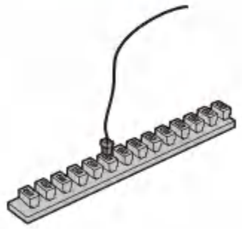

Ensure that the connectors are correctly installed as shown in the picture.

Check if the wires are disconnected or broken from the solder joints.

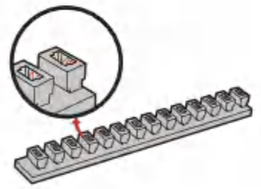

Check the internal pins of the expansion board. The internal pins of a properly working port should be straight, if the small pins are bent, they may be considered faulty ports.

SAFETY PRECAUTIONS

1. Before use, please be sure to check the voltage. Use a power supply or transformer with a voltage lower than 5V to avoid damaging the product and preventing potential safety hazards.
2. The lights in the product are not replaceable. If they are damaged or not lighting up, please refer to the troubleshooting section or contact our customer service for assistance.
3. Avoid pulling on the lighting wires as this may cause damage.
4. Do not expose the product to water as it may damage the product
5. If the plug does not fit easily into the ports on the board, reverse the direction and insert it again to avoid damage and short circuits, rather than forcing it in.
6. Please read and follow the instructions carefully during building to ensure a good building experience.

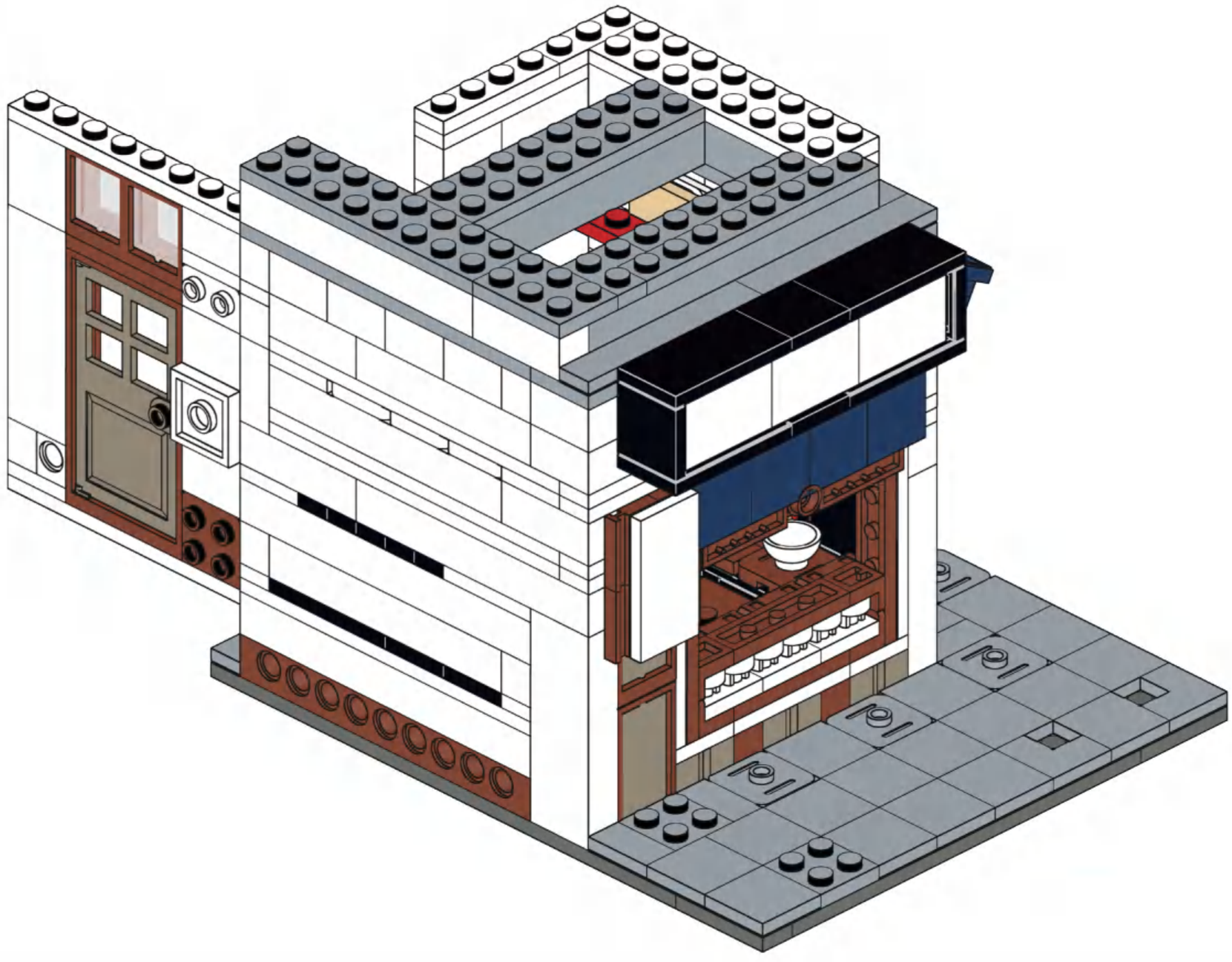

A

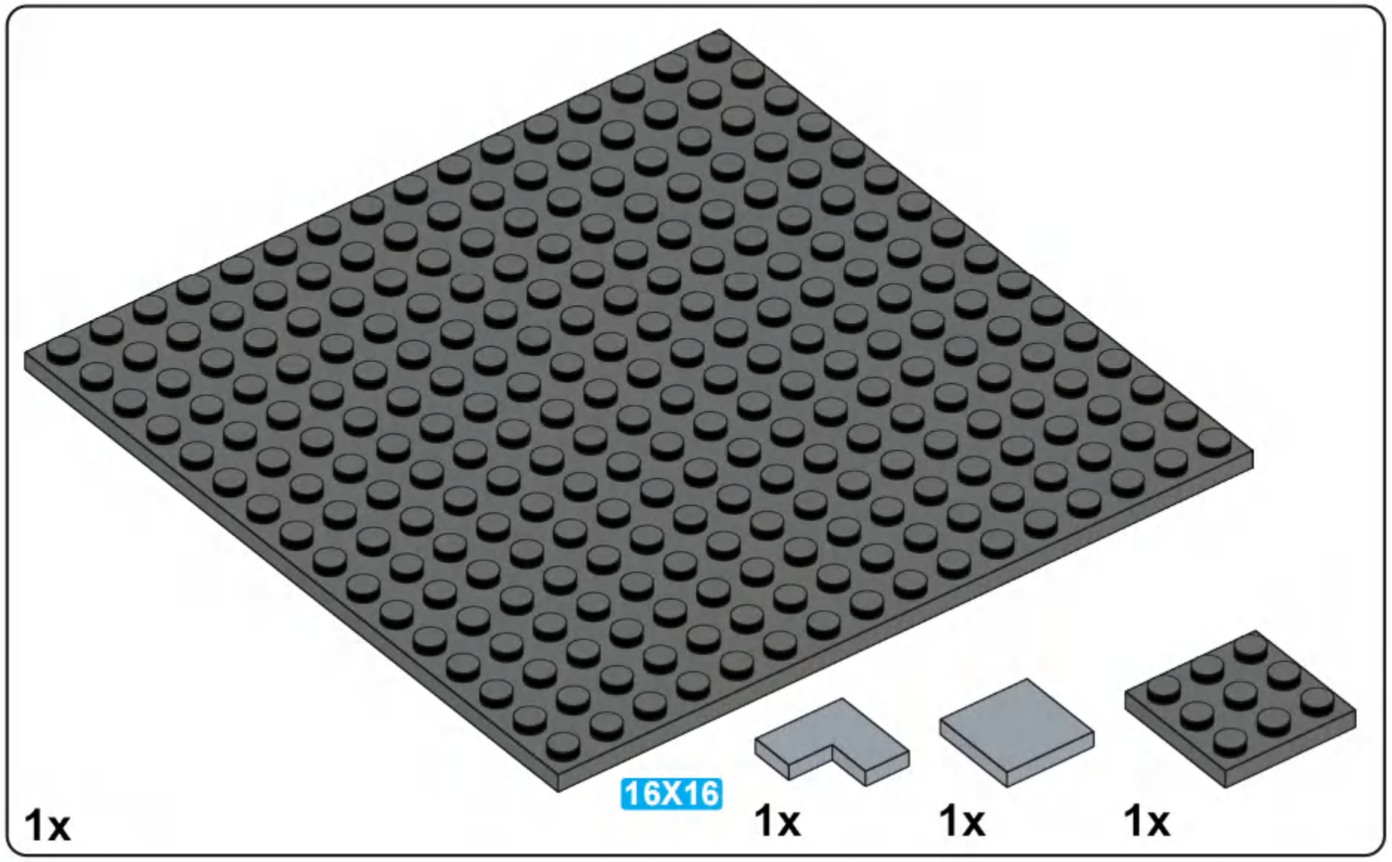

A1

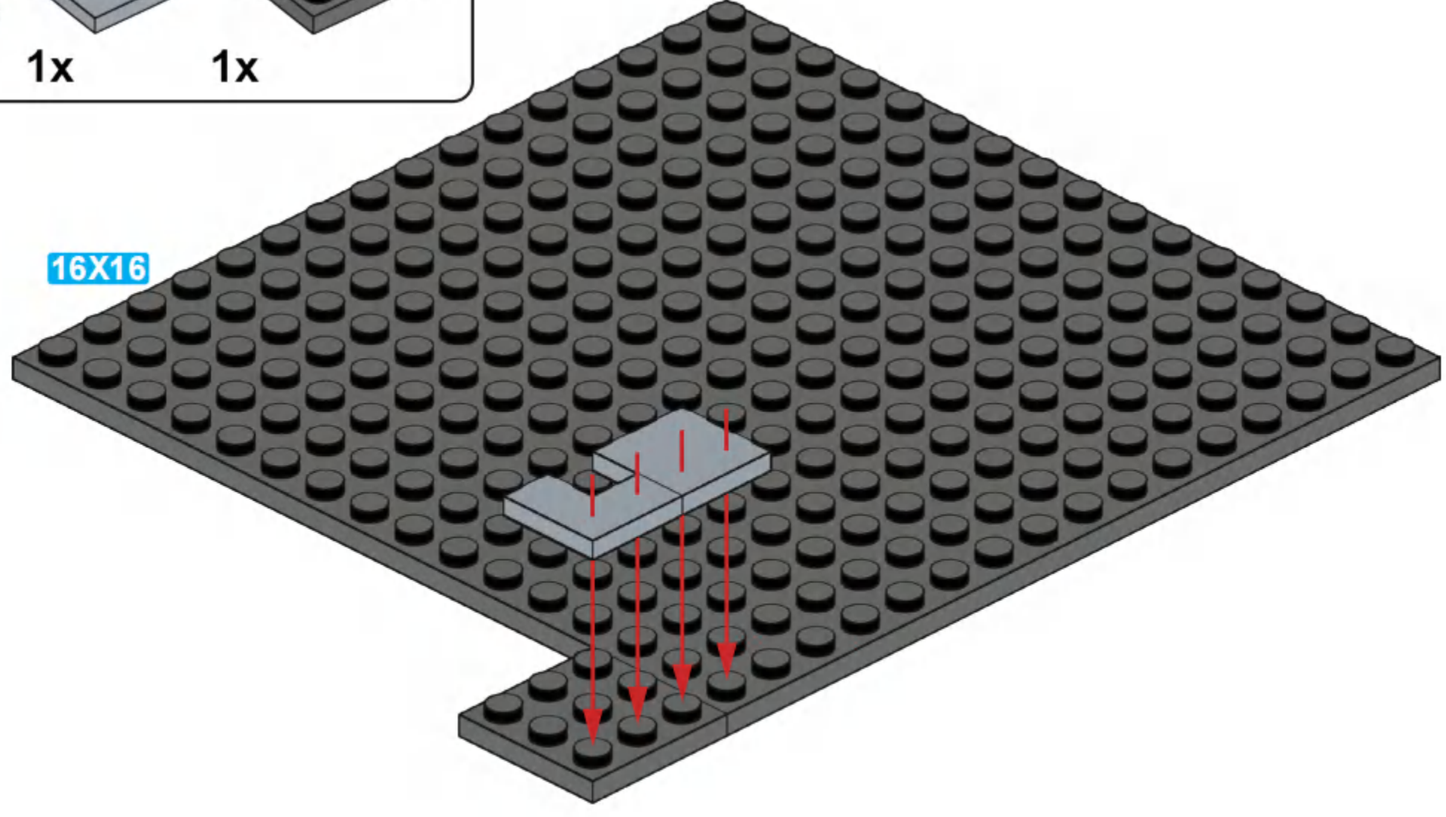

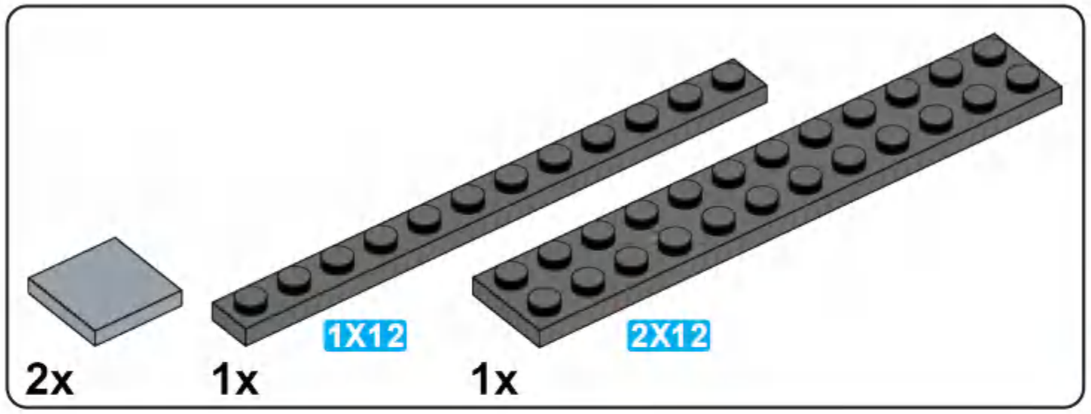

A2

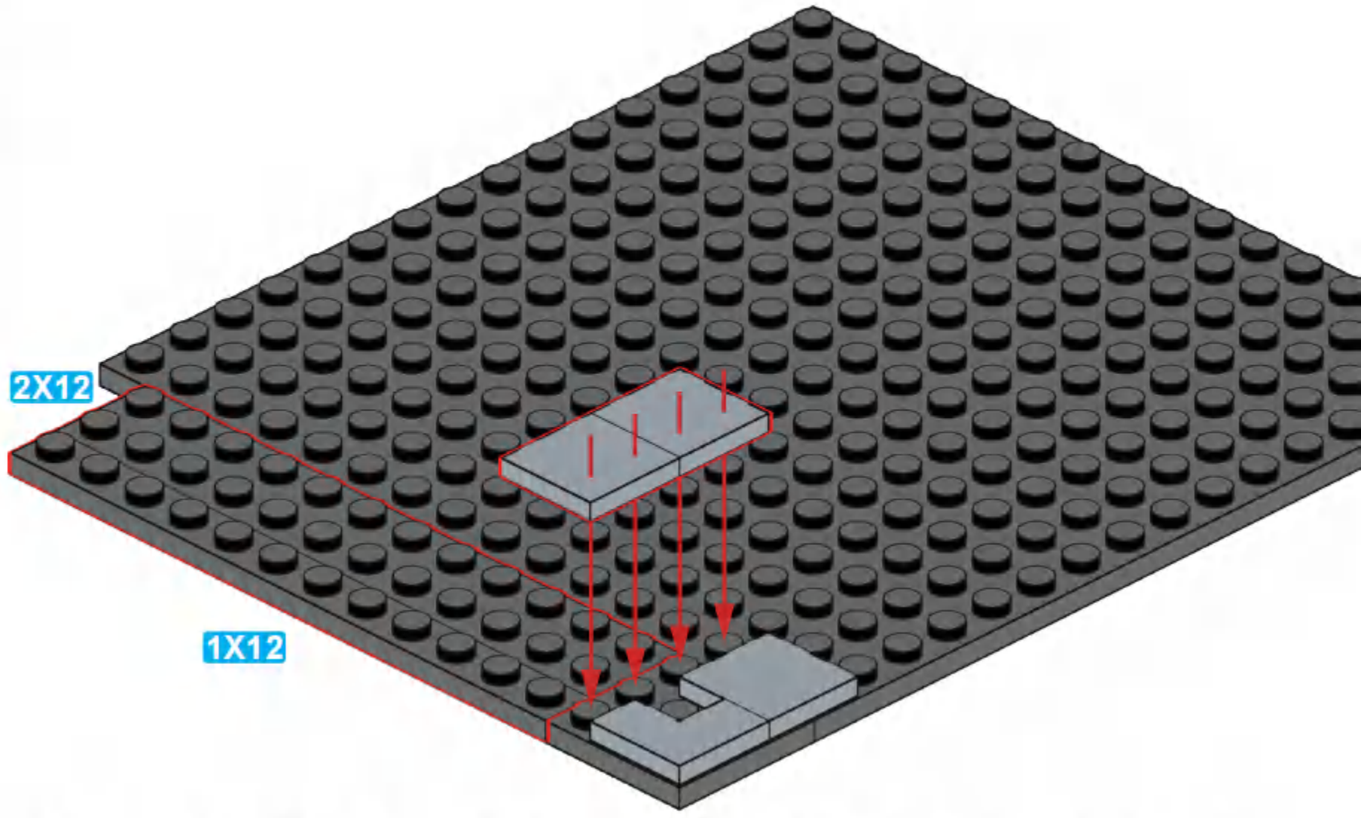

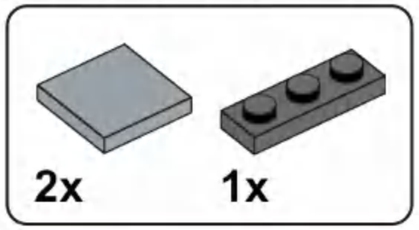

A3

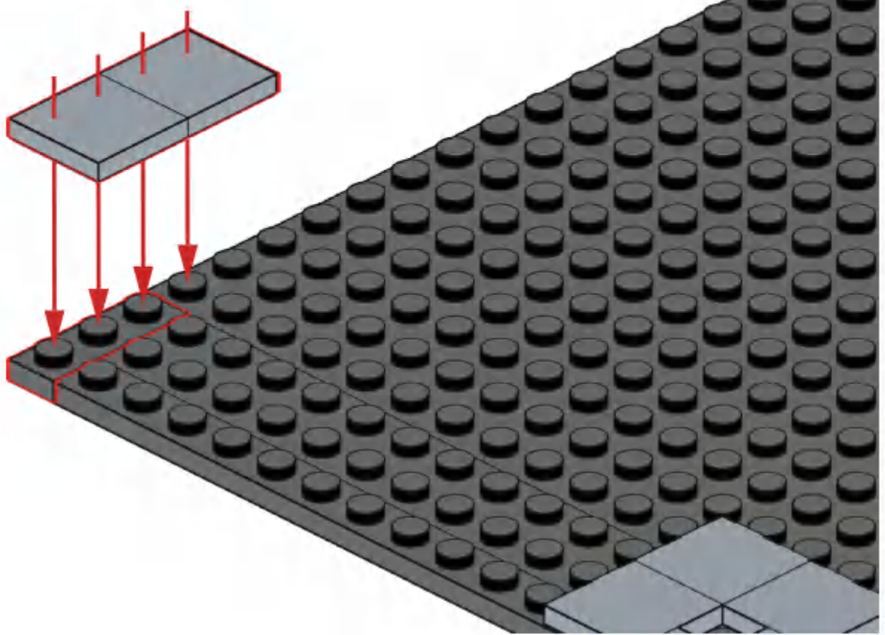

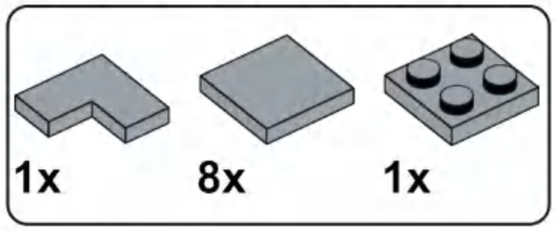

A4

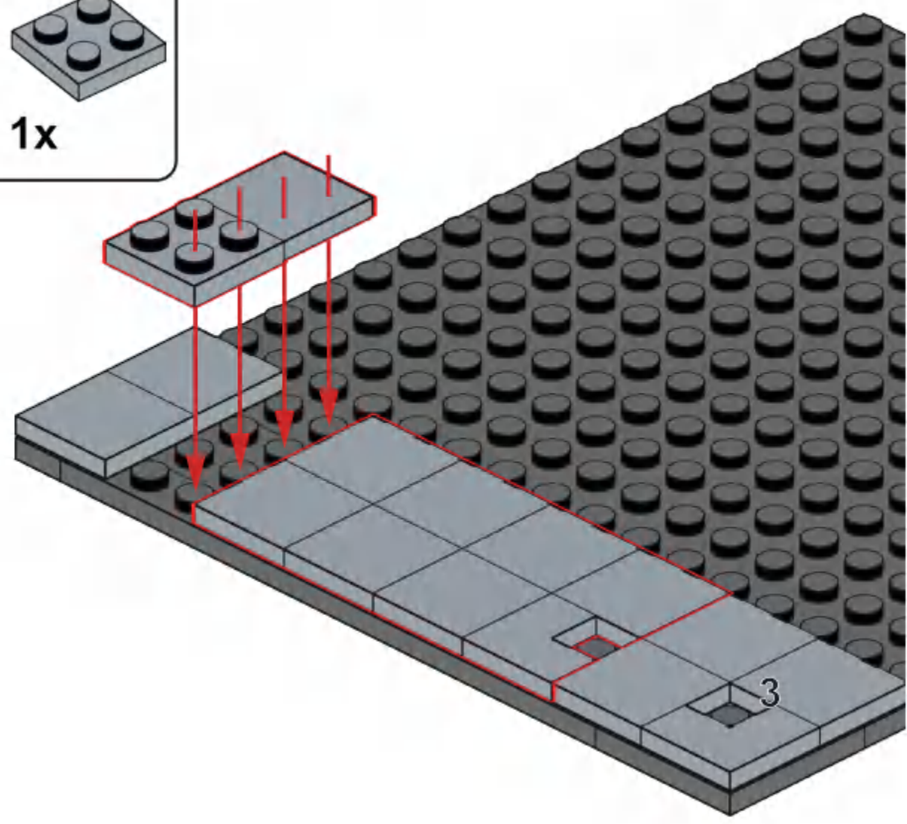

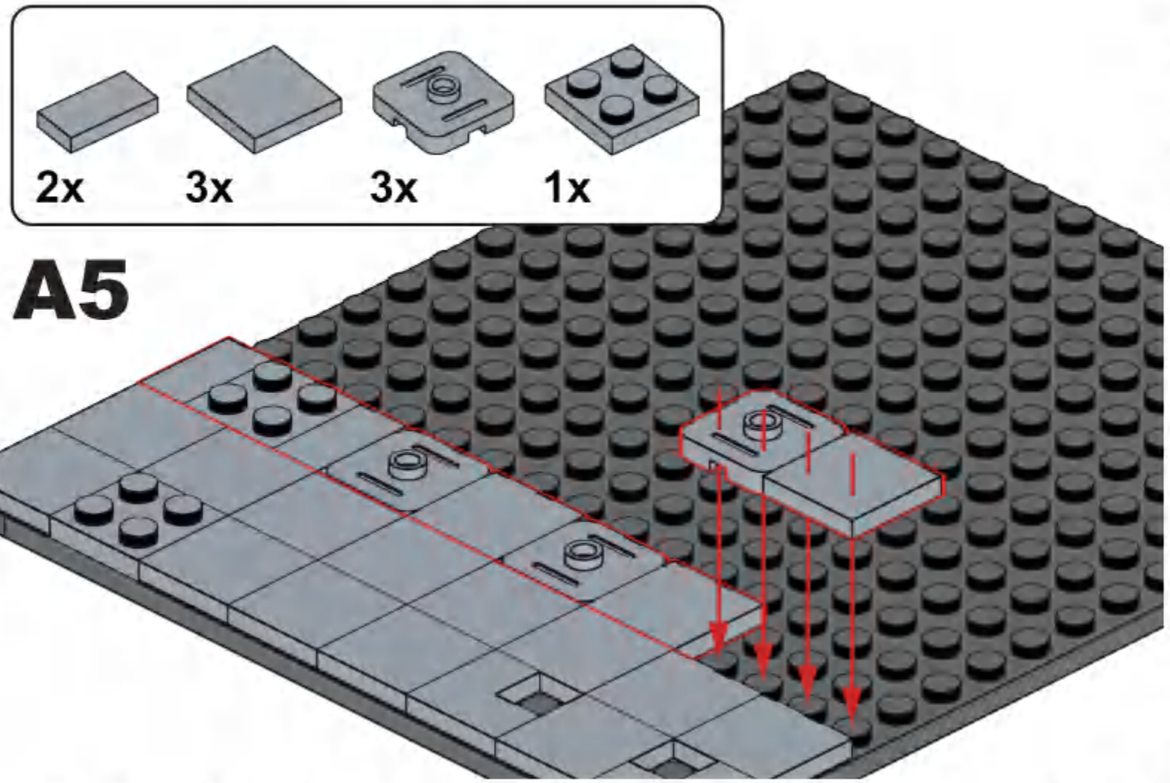
2x
3x
3x
1x
A5

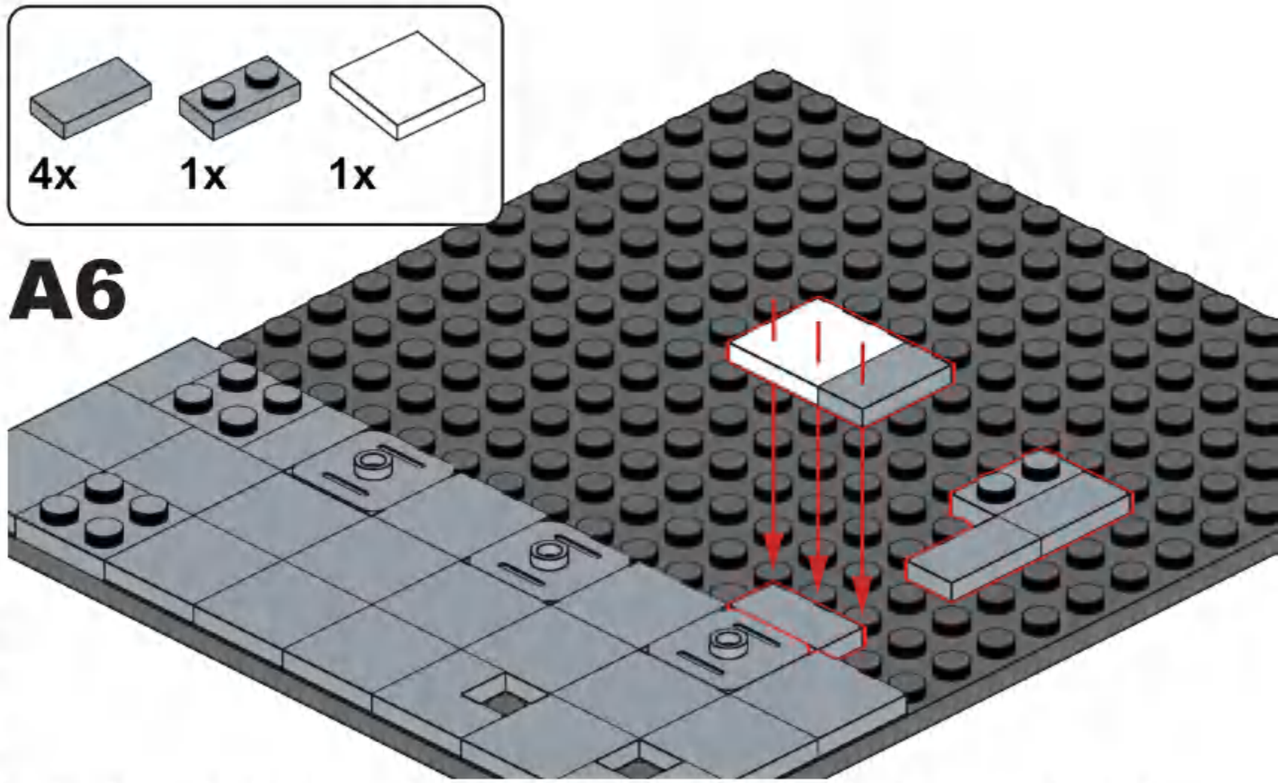
4x
1x
1x
A6

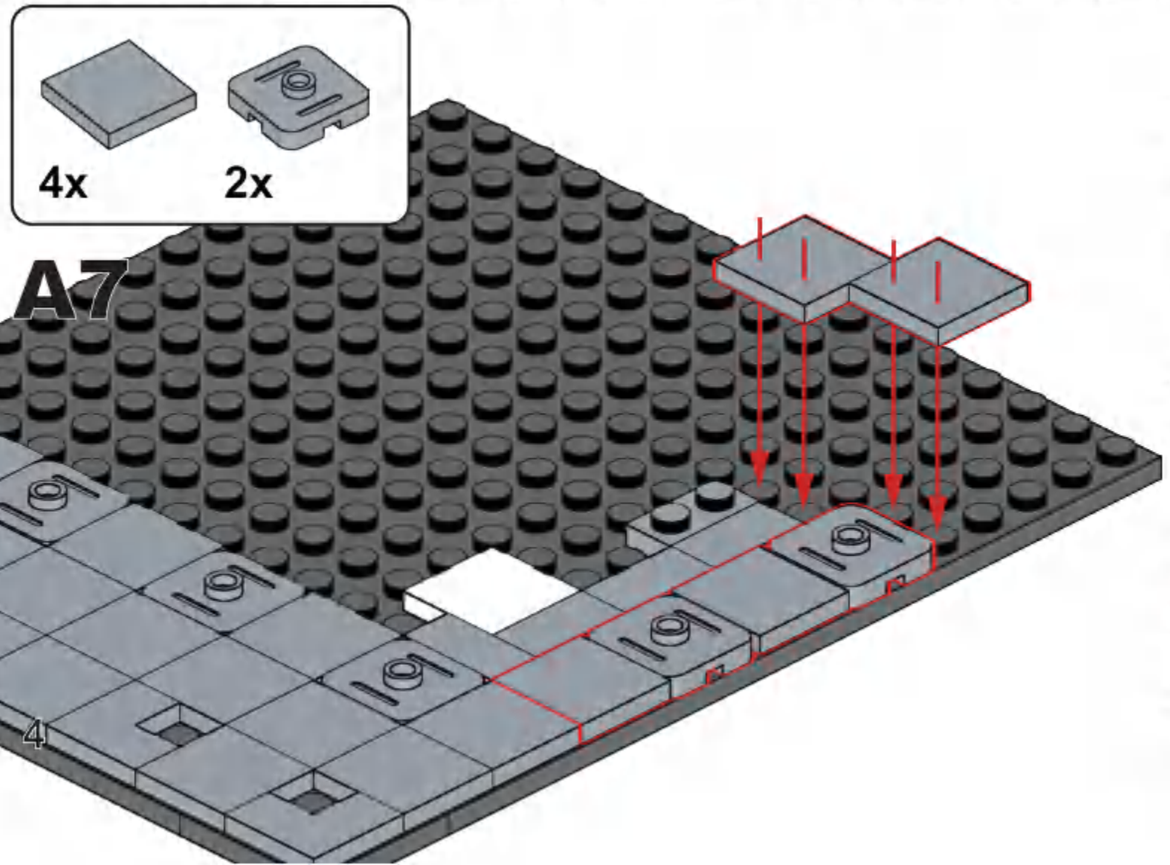
4x
2x
A7

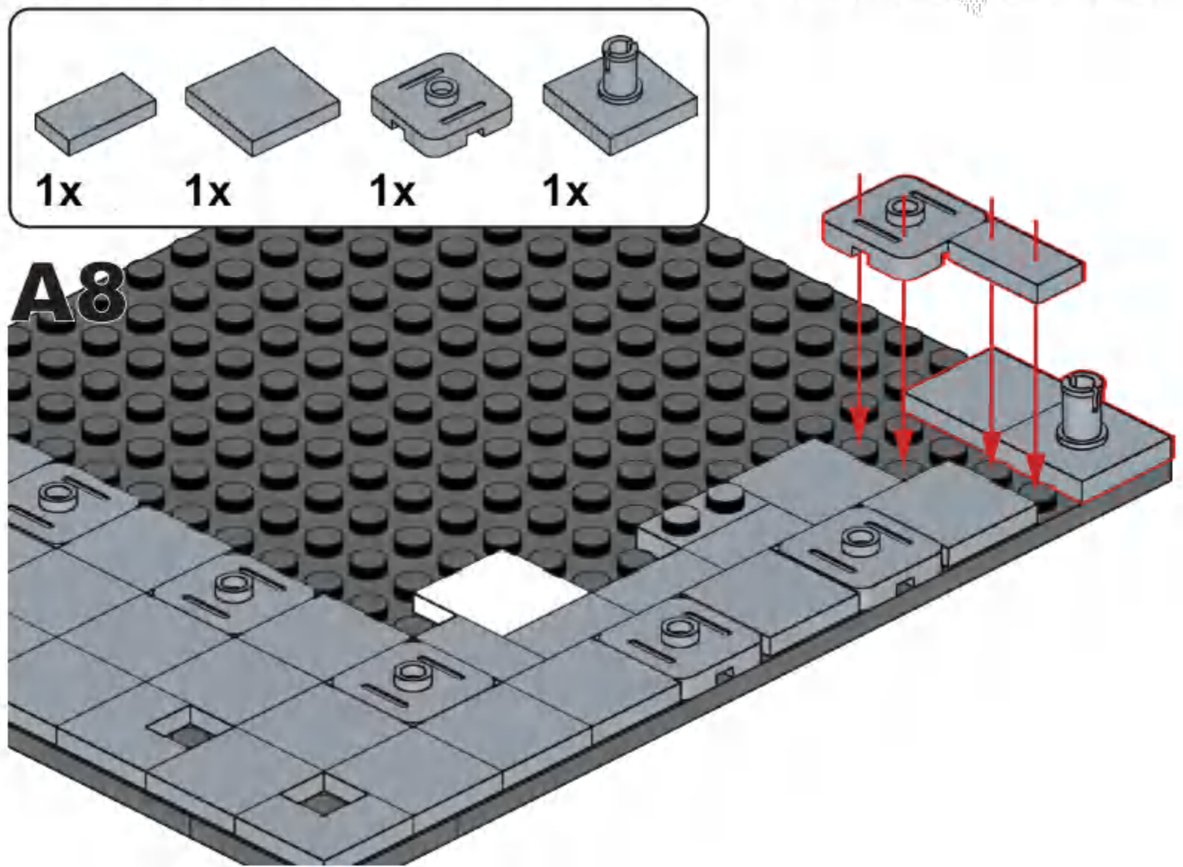
1x
1x
1x
1x
A8

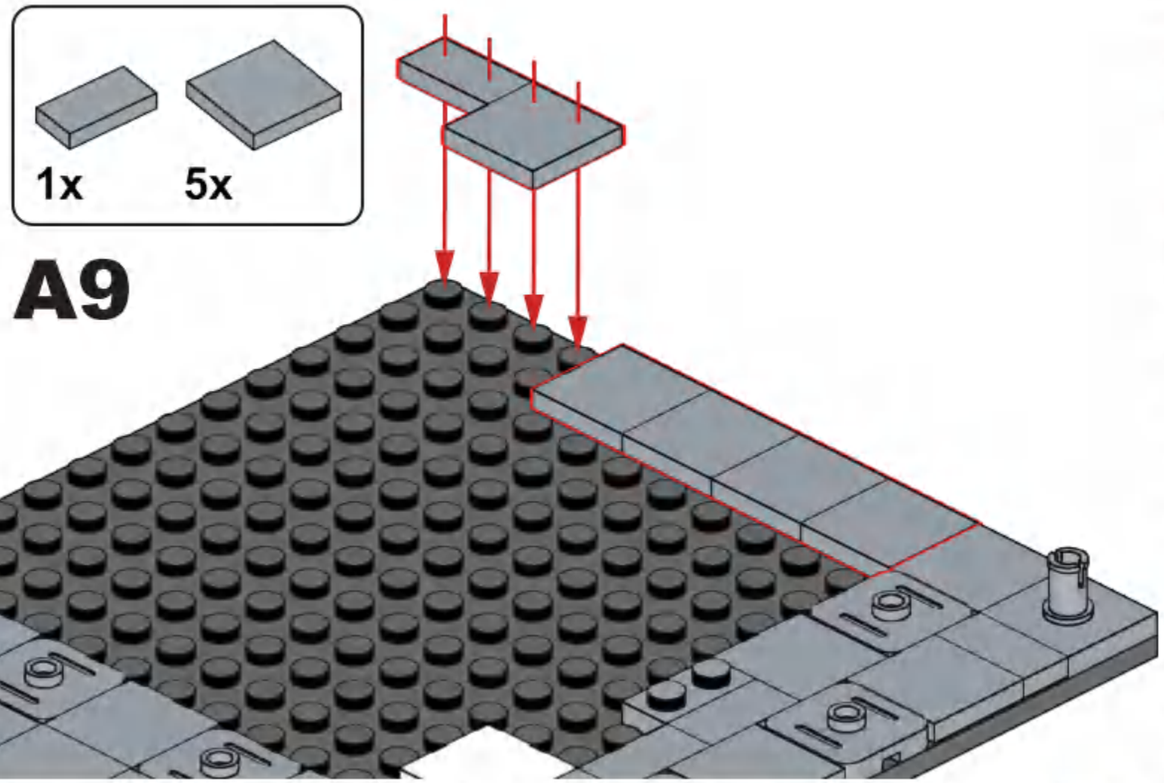
1x
5x
A9

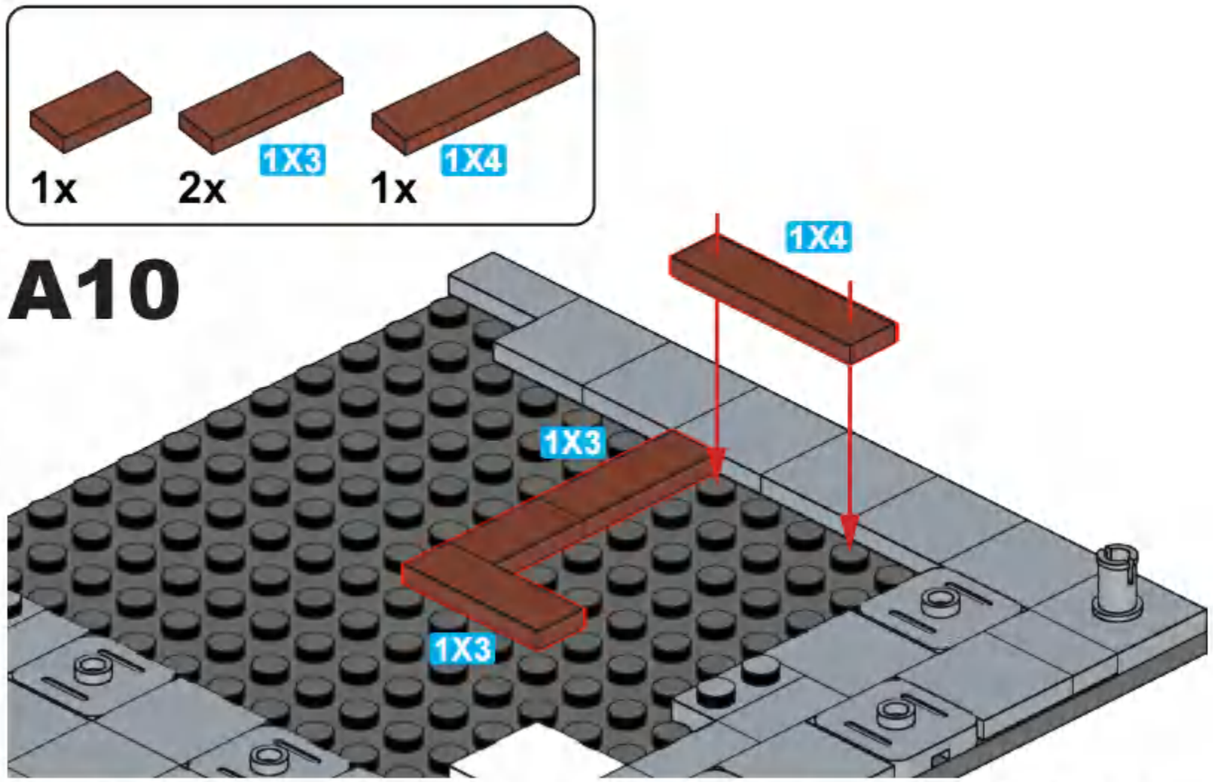
1x
2x
1X3
1x
1X4
A10
1X4
1X3
1X3

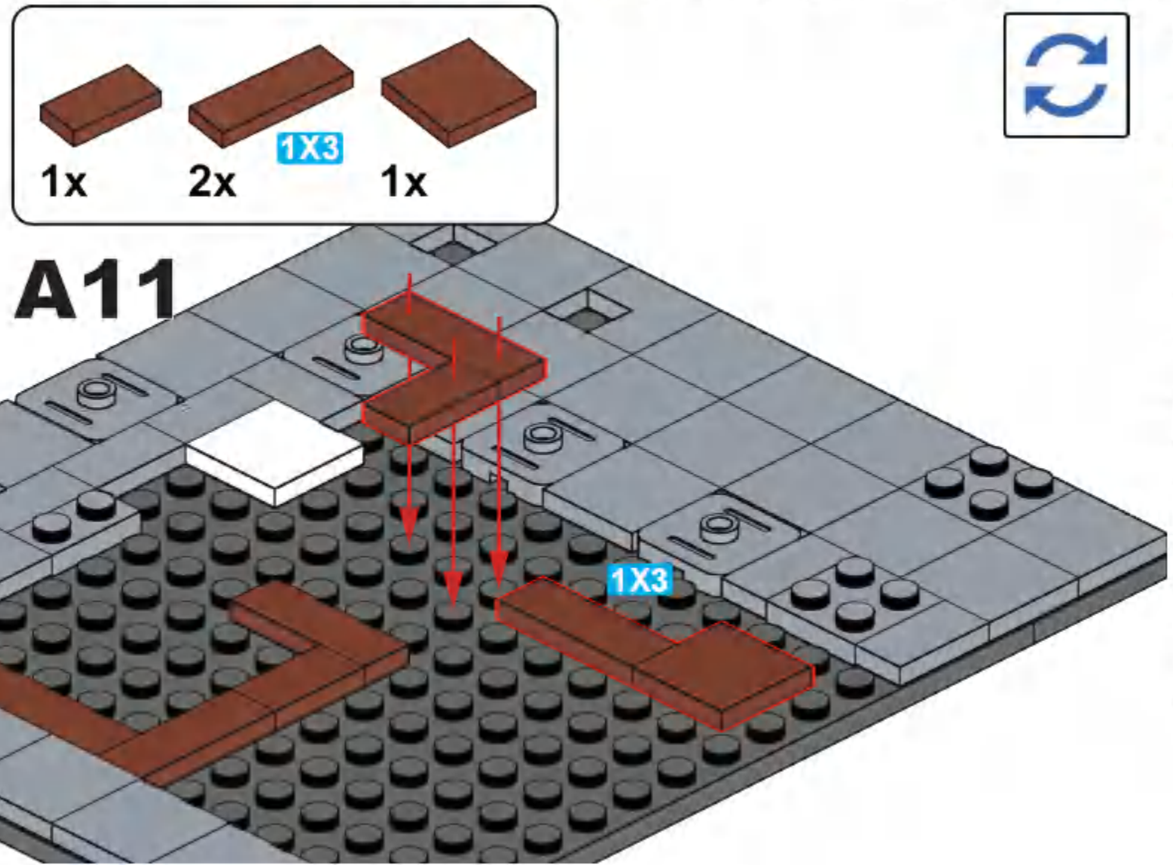
1x
2x
1X3
1x
A11
1X3

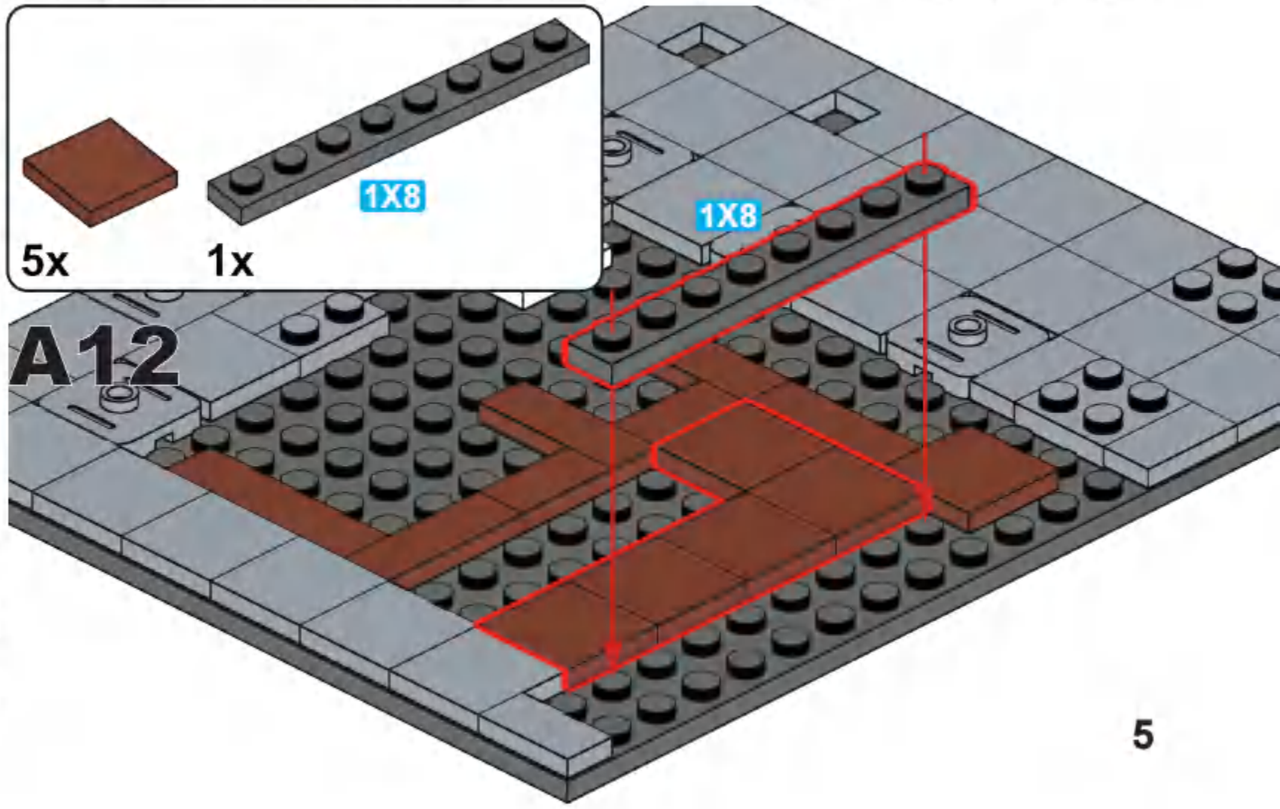
5x
1x
1X8
A12
1X8

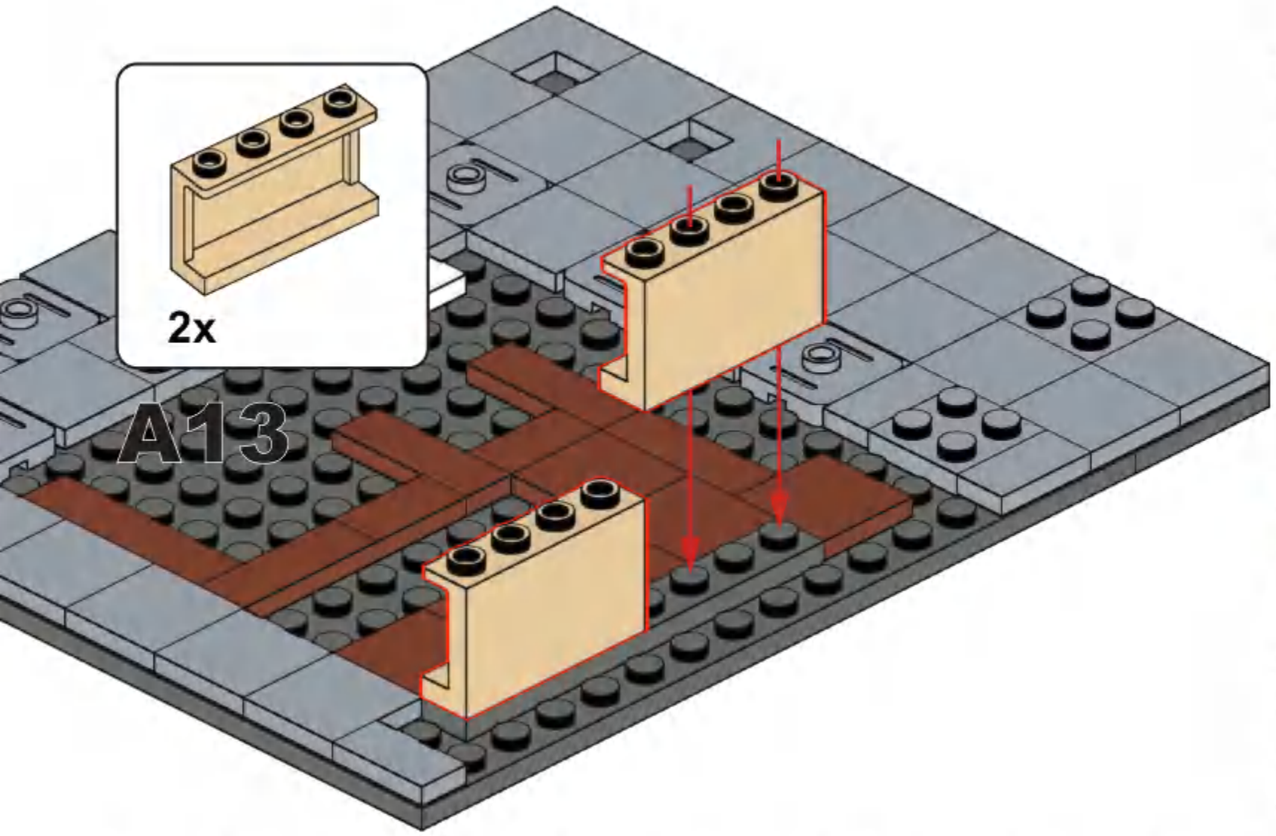

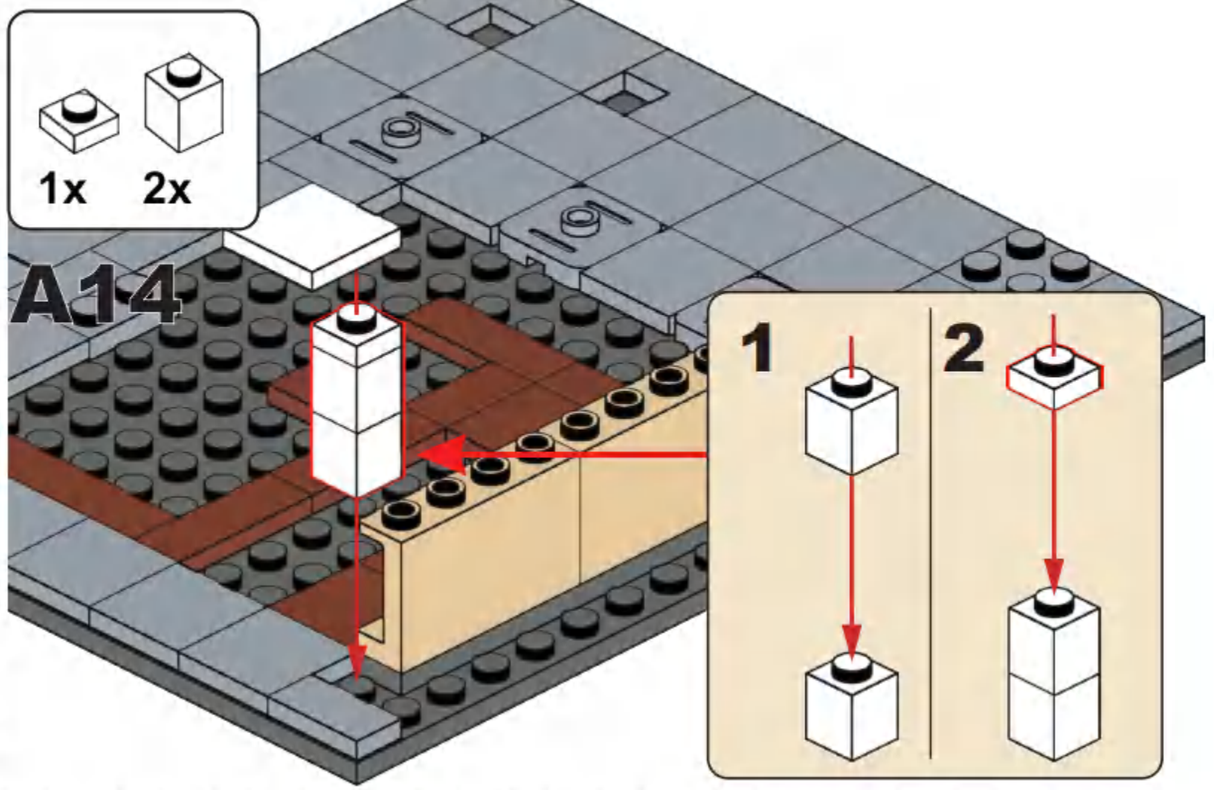

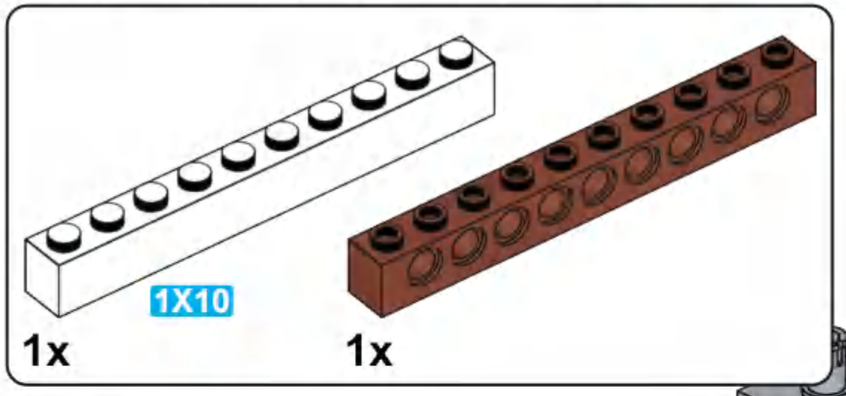

A15

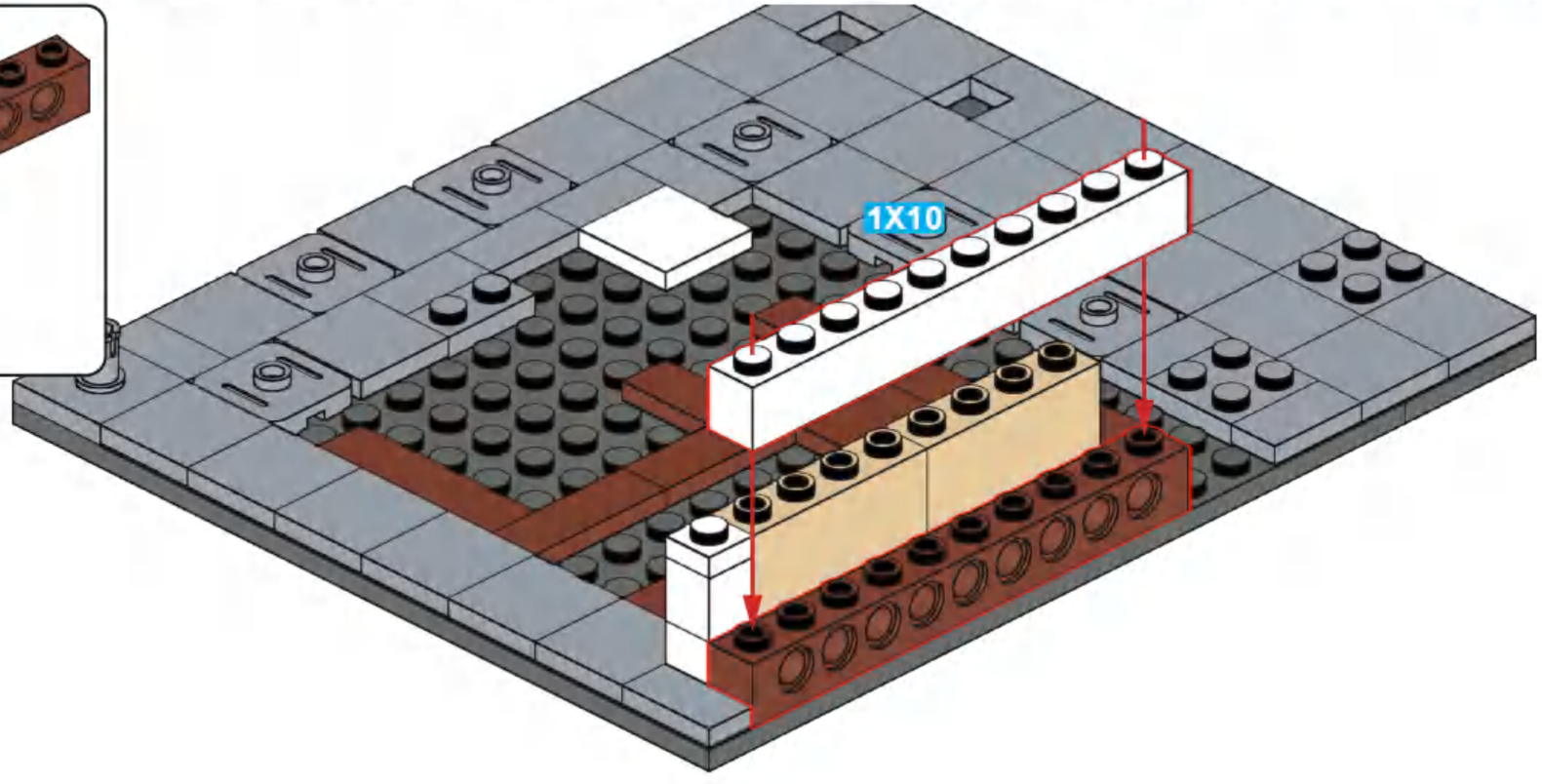

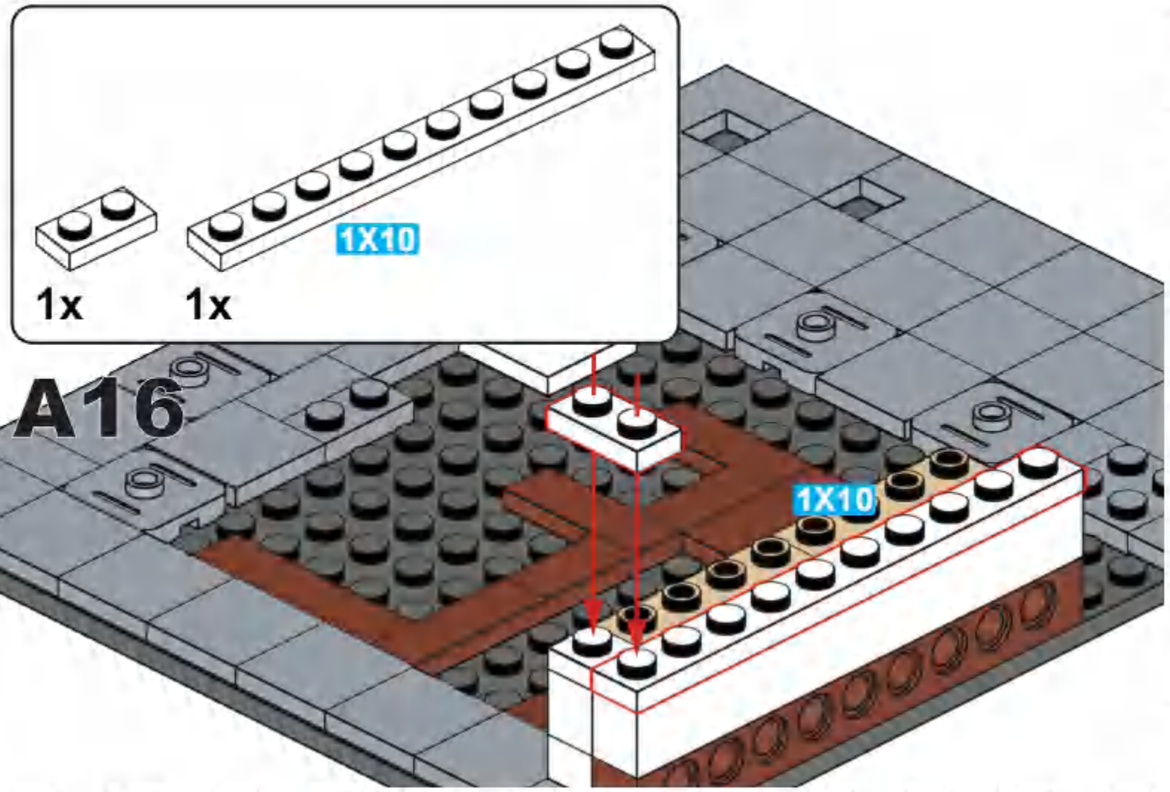
1x
1x
1X10
A16
1X10

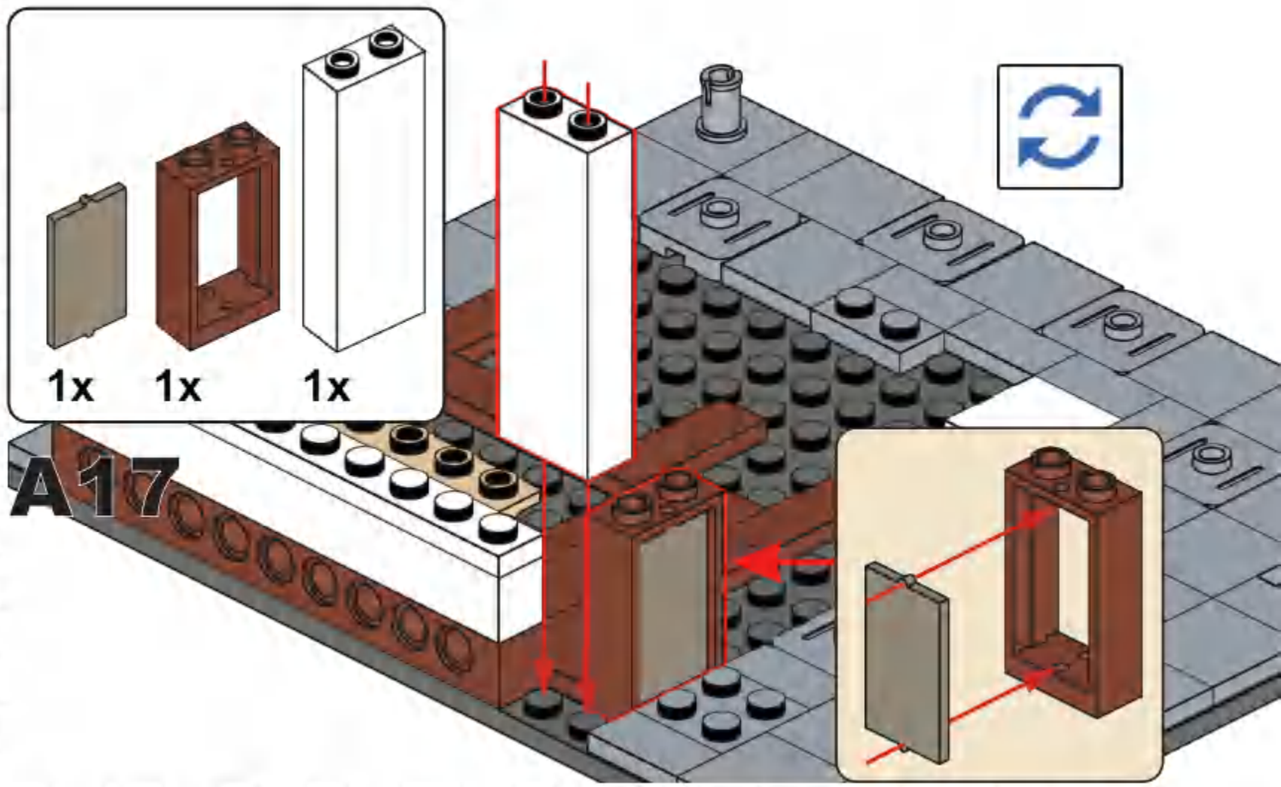
1x
1x
1x
A17

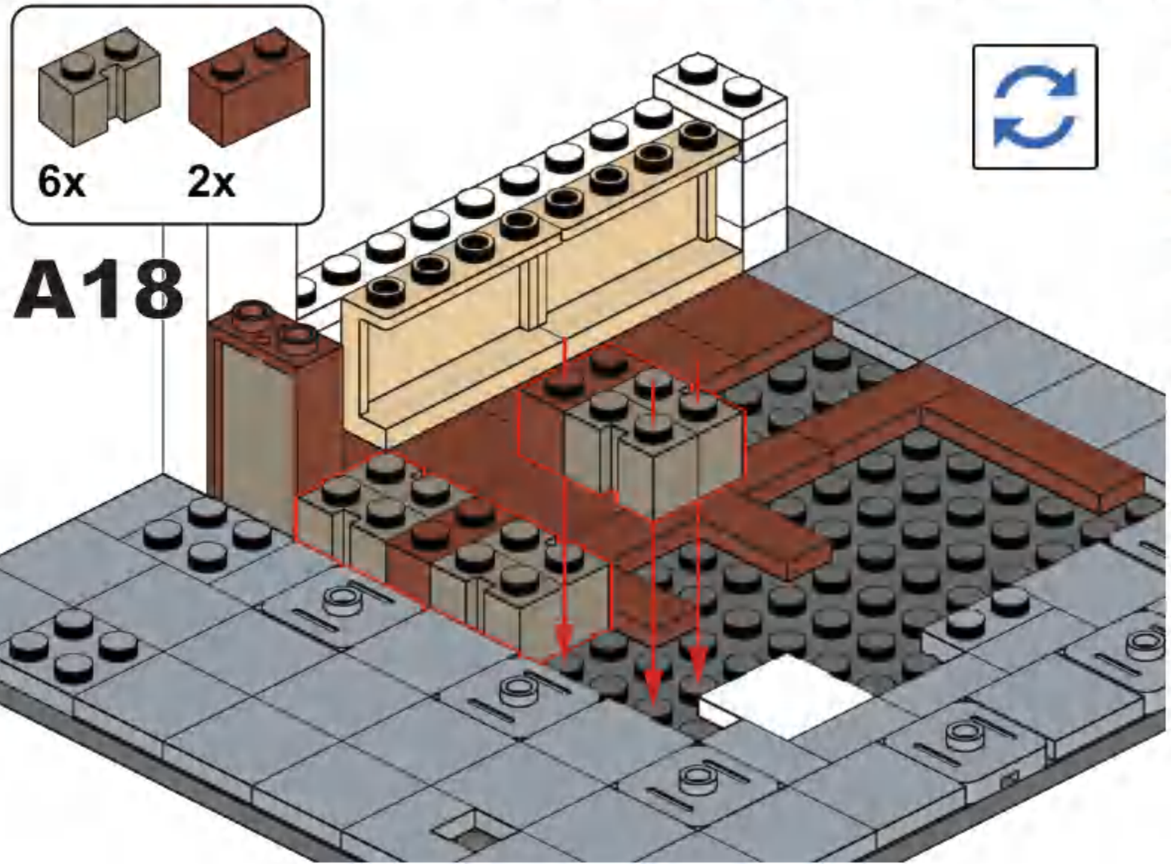
6x
2x
A18

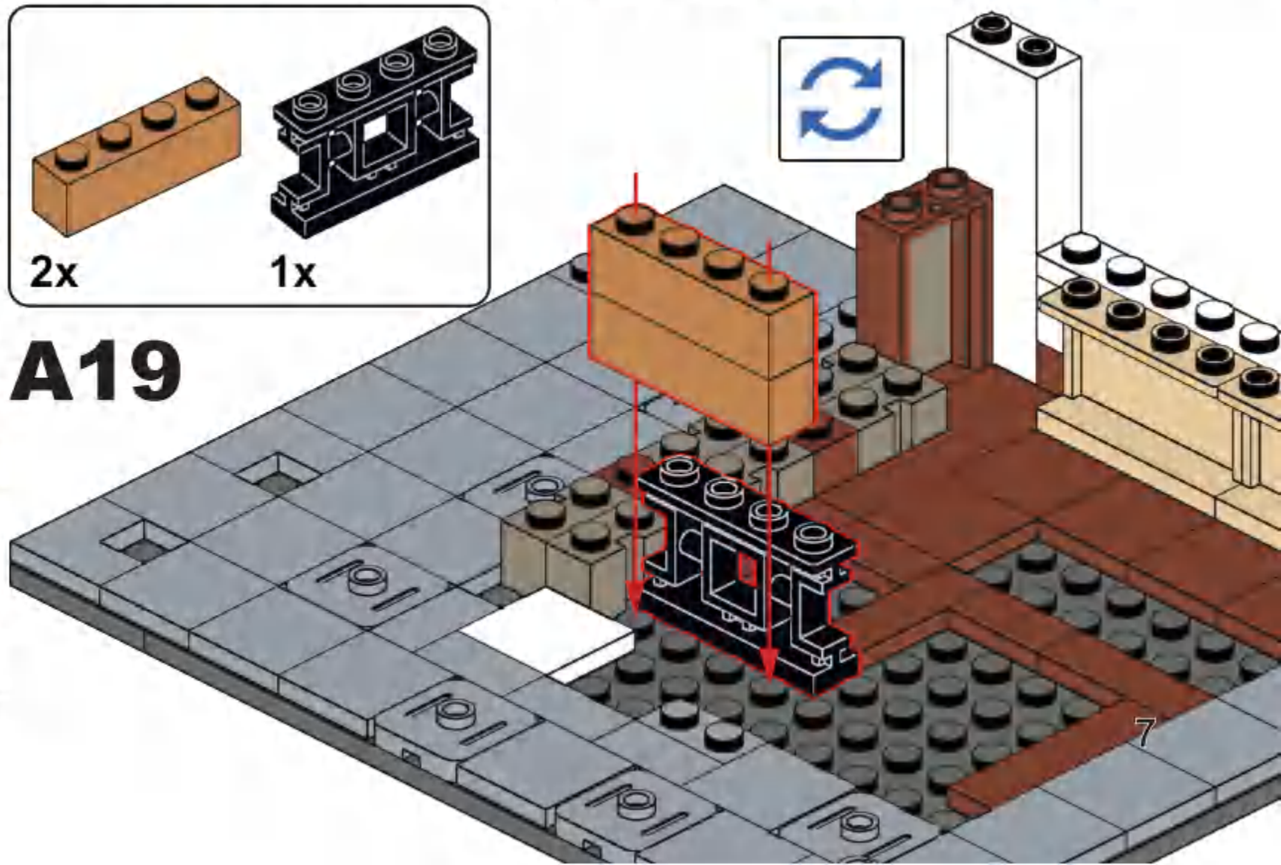
2x
1x
A19

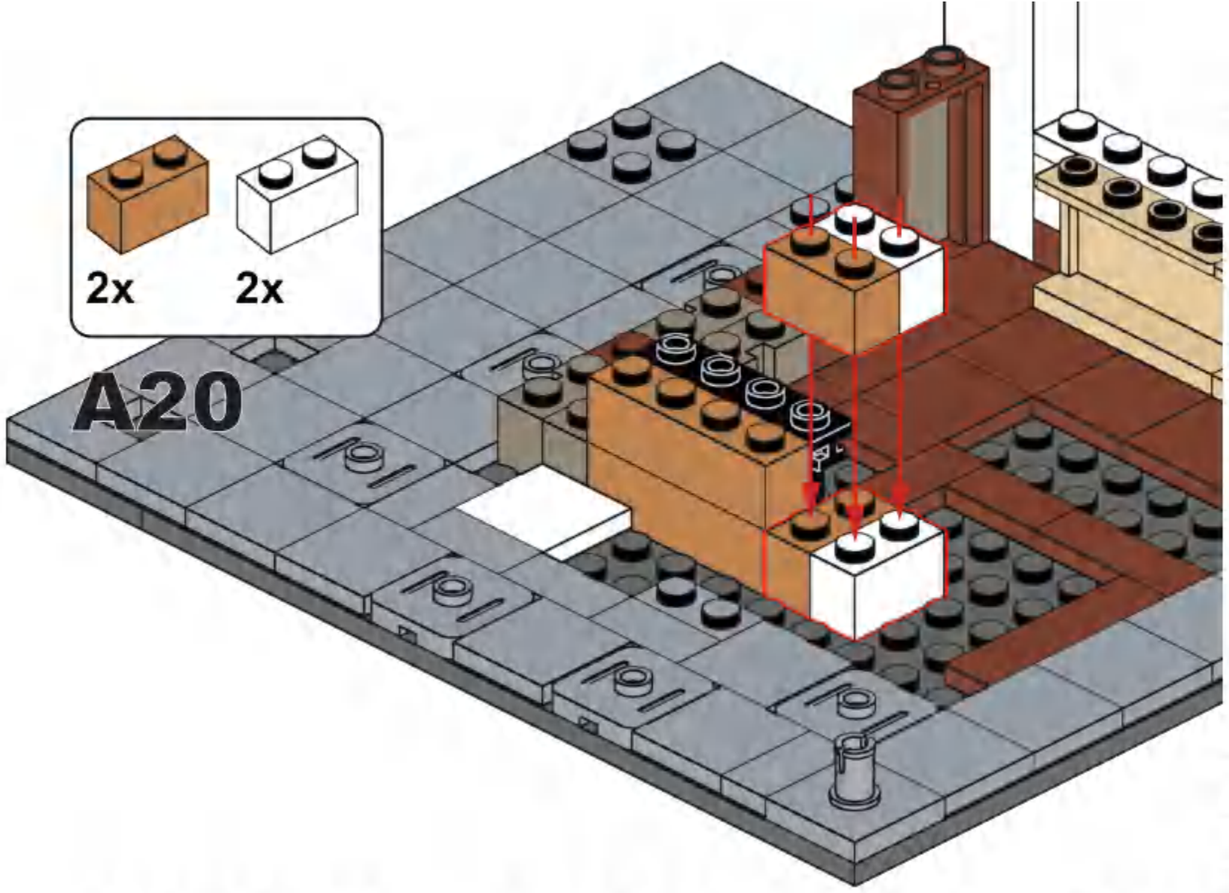

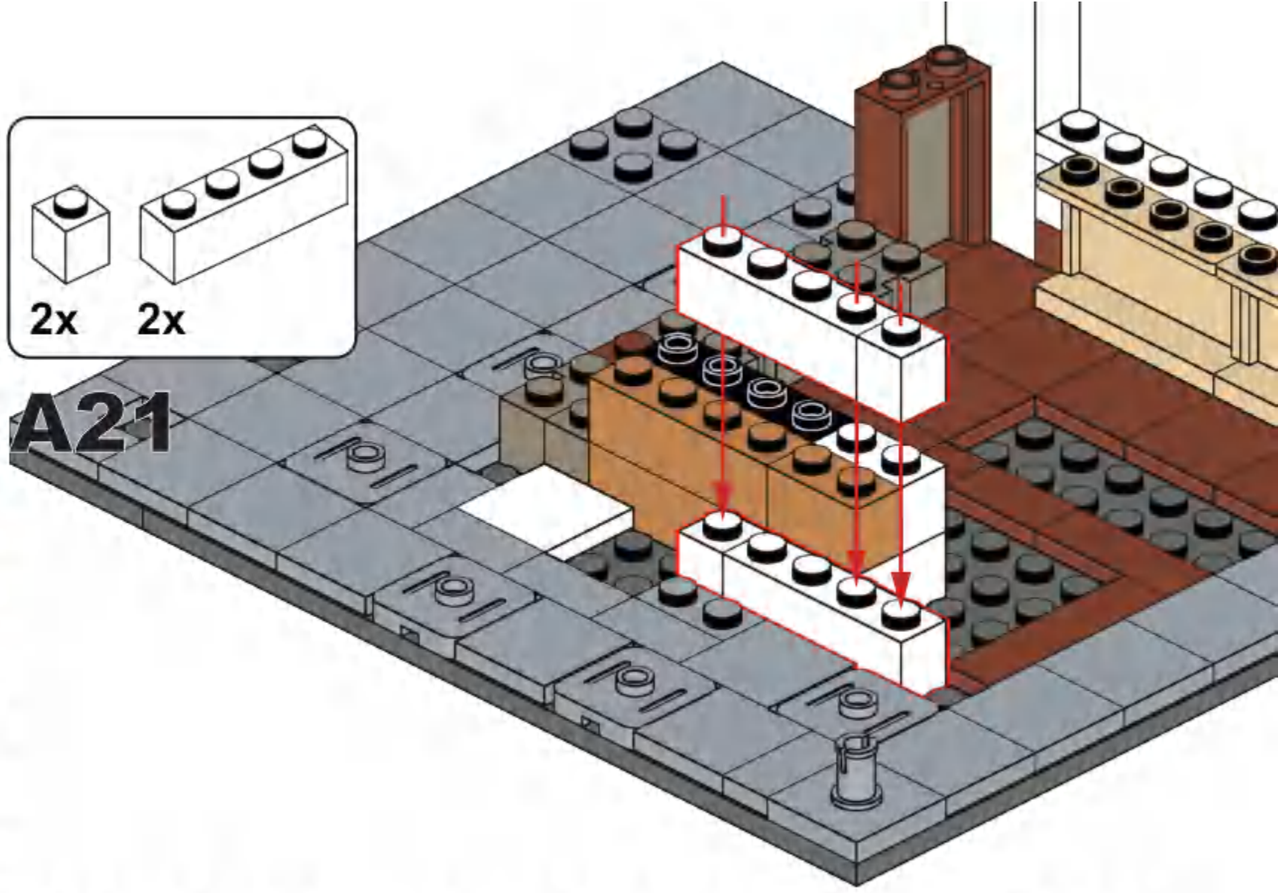

A22

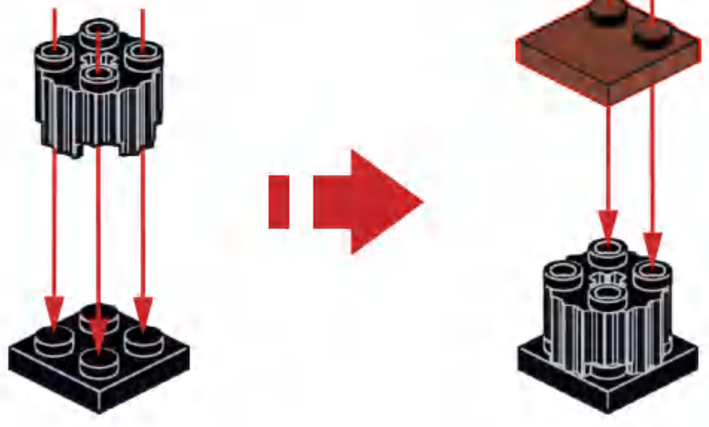

x2

A23

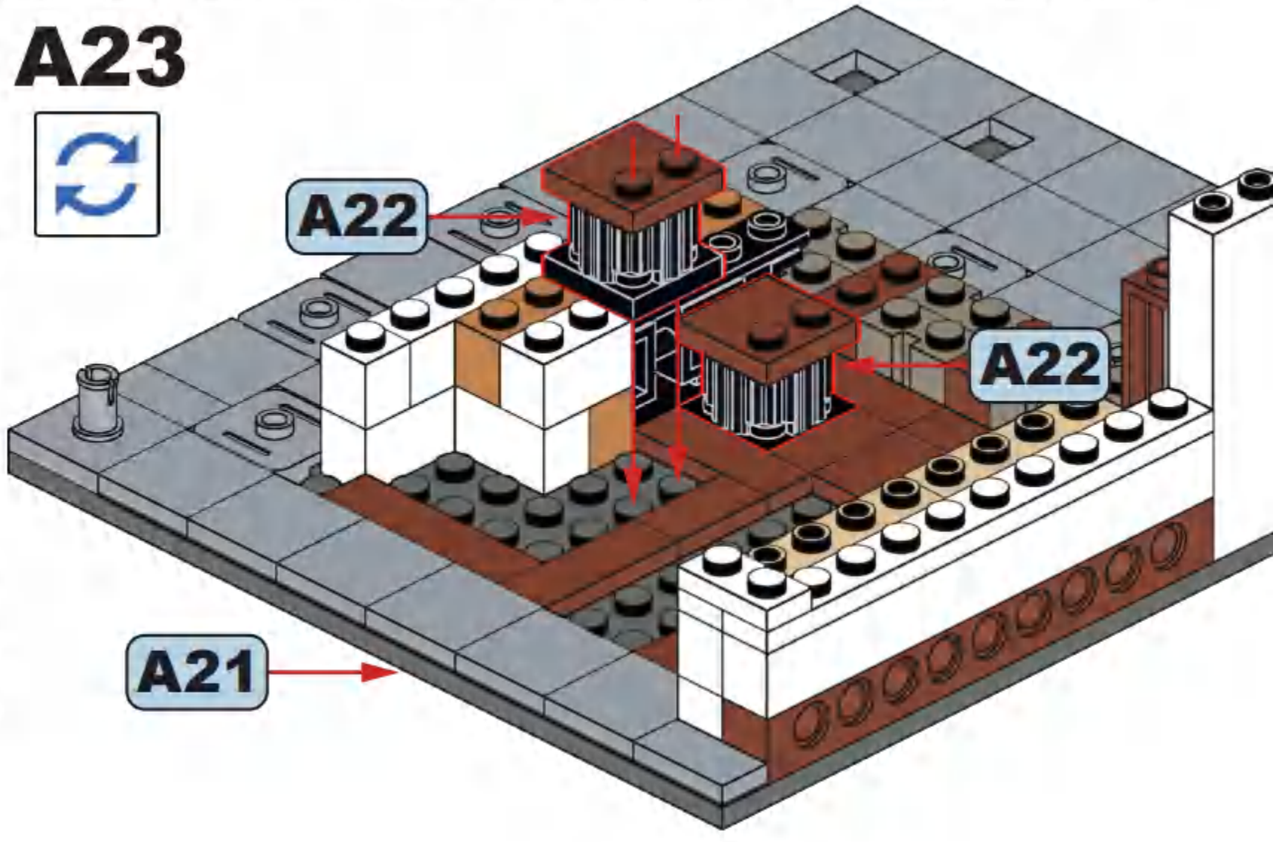

2x 1x

A24

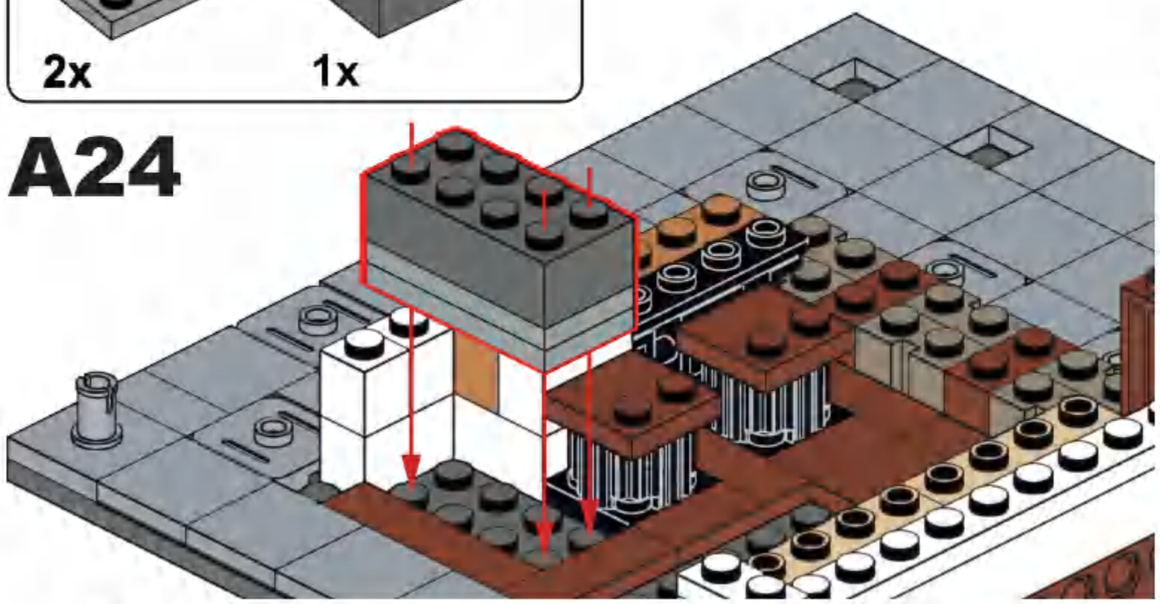

2x

A25

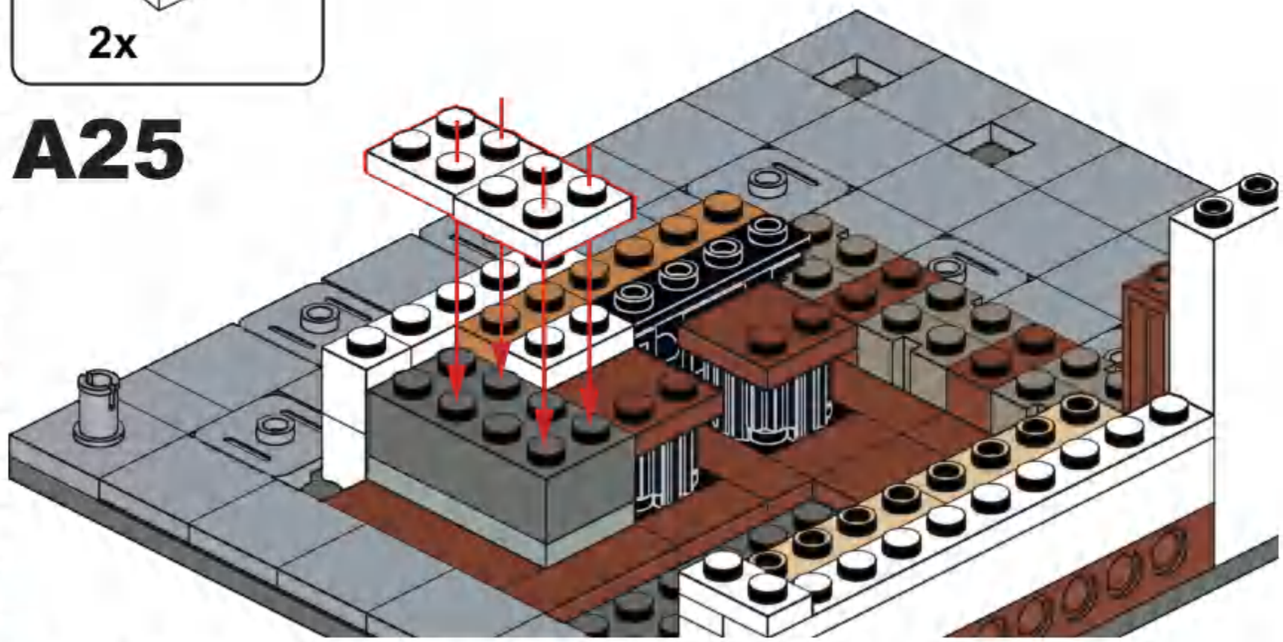

1x 1x 1x 1x 1x 1x 2X3

A26

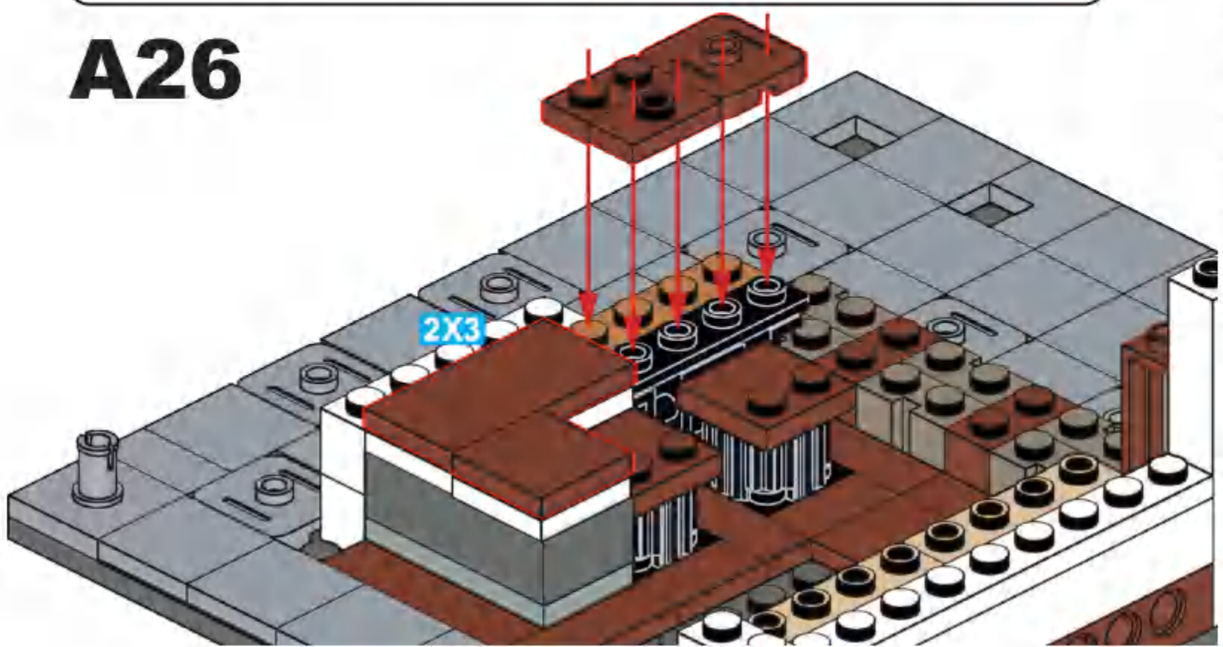

1x

A27

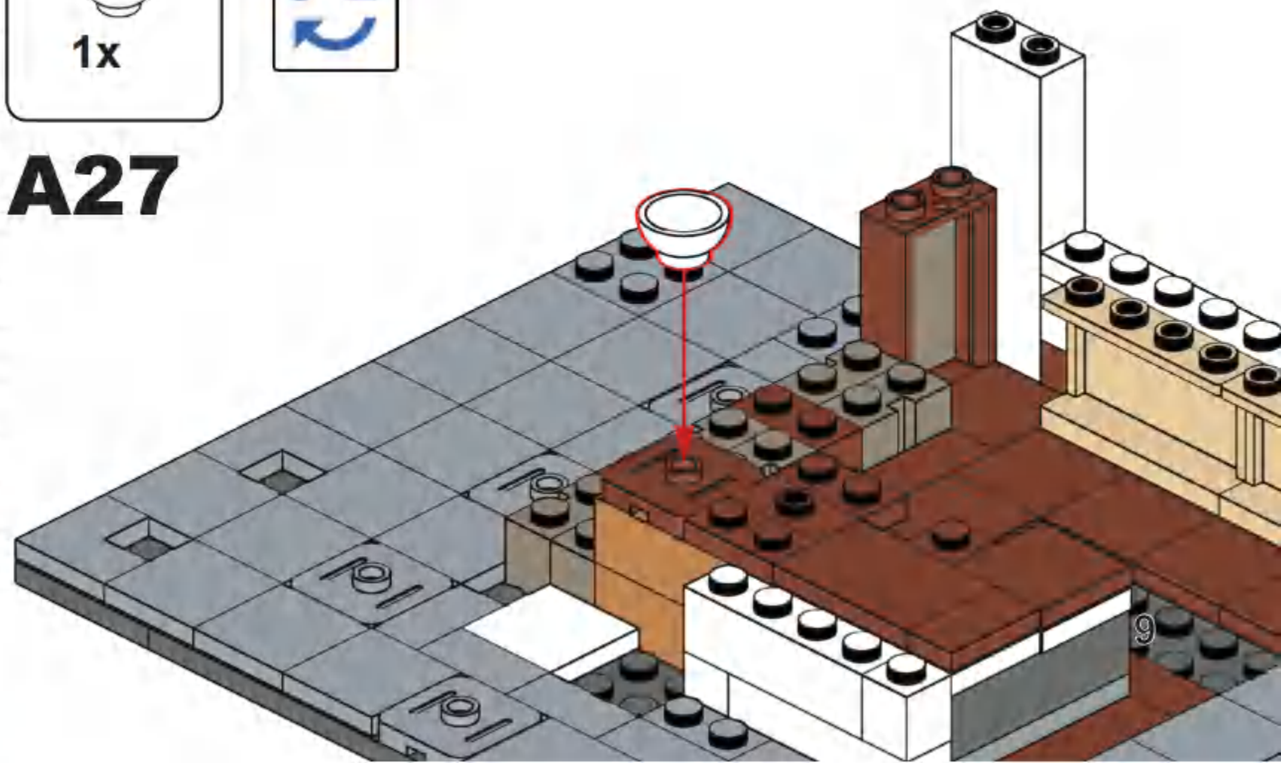

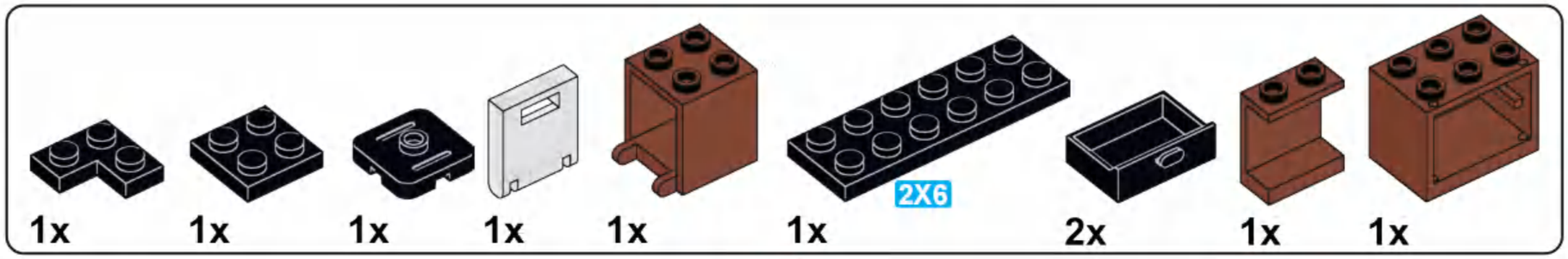

A28

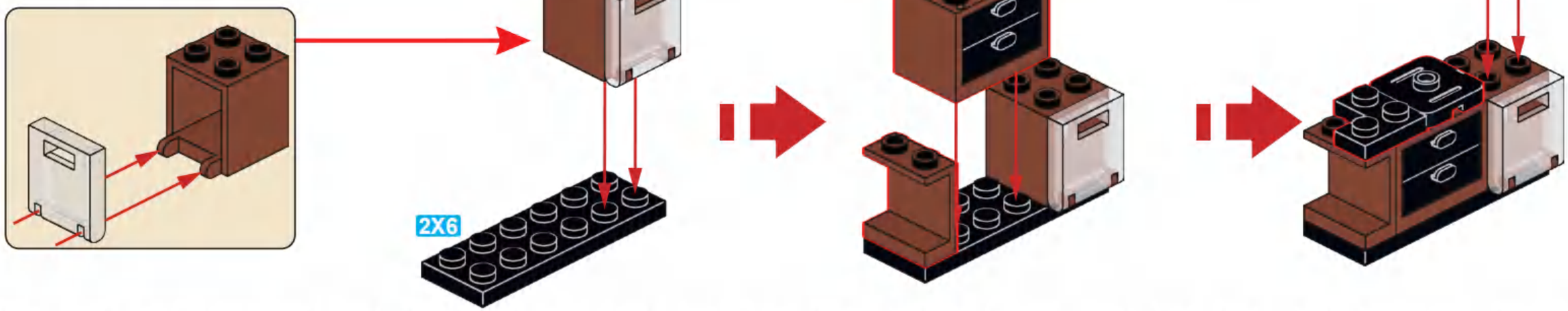

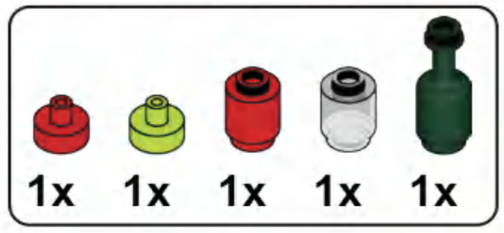

A29

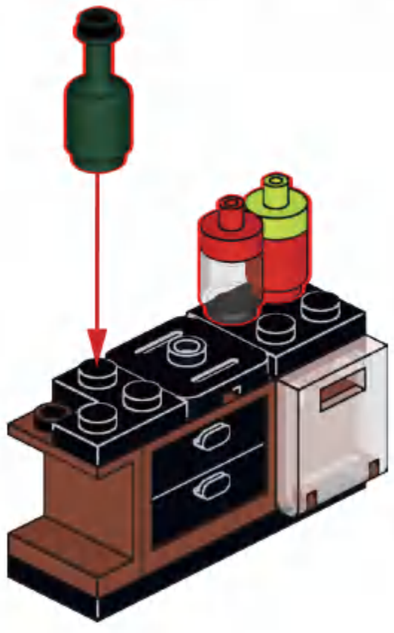

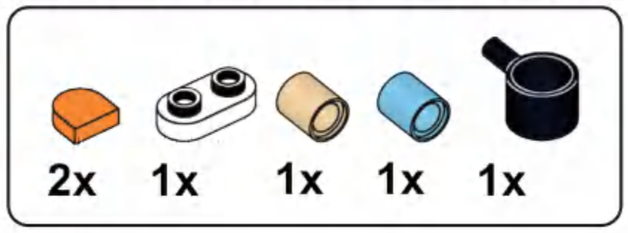

A30

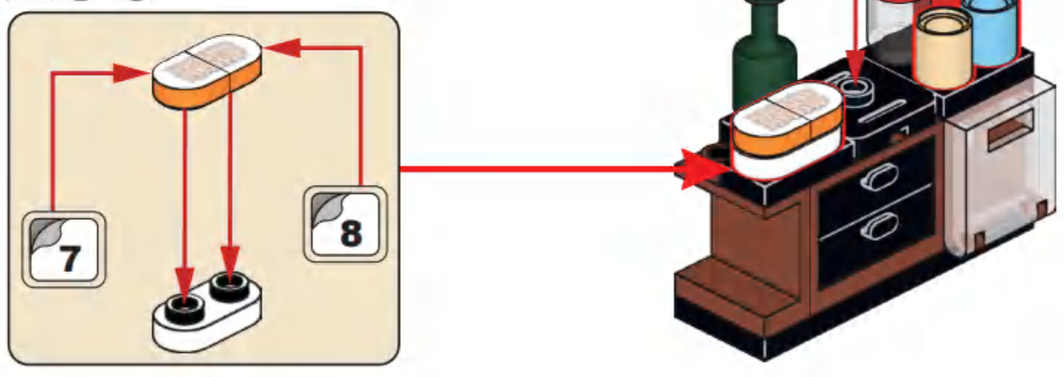

A31

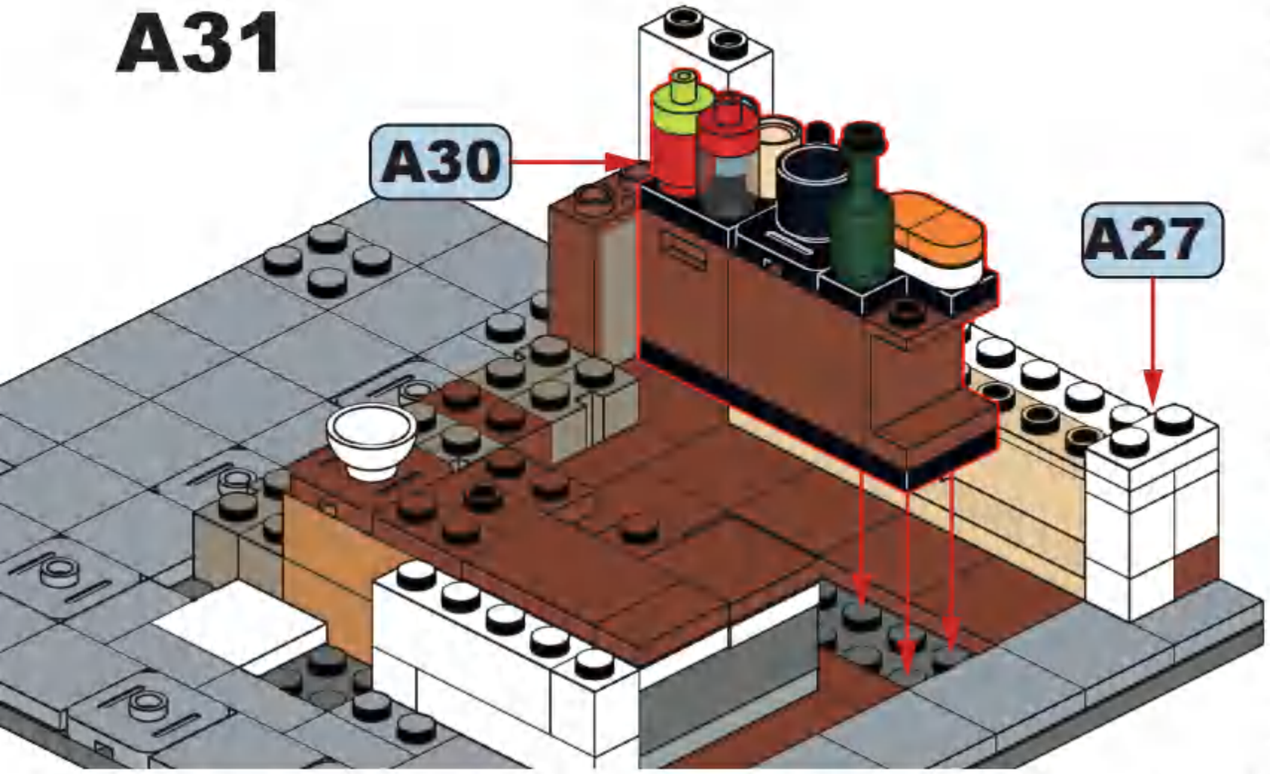

A32

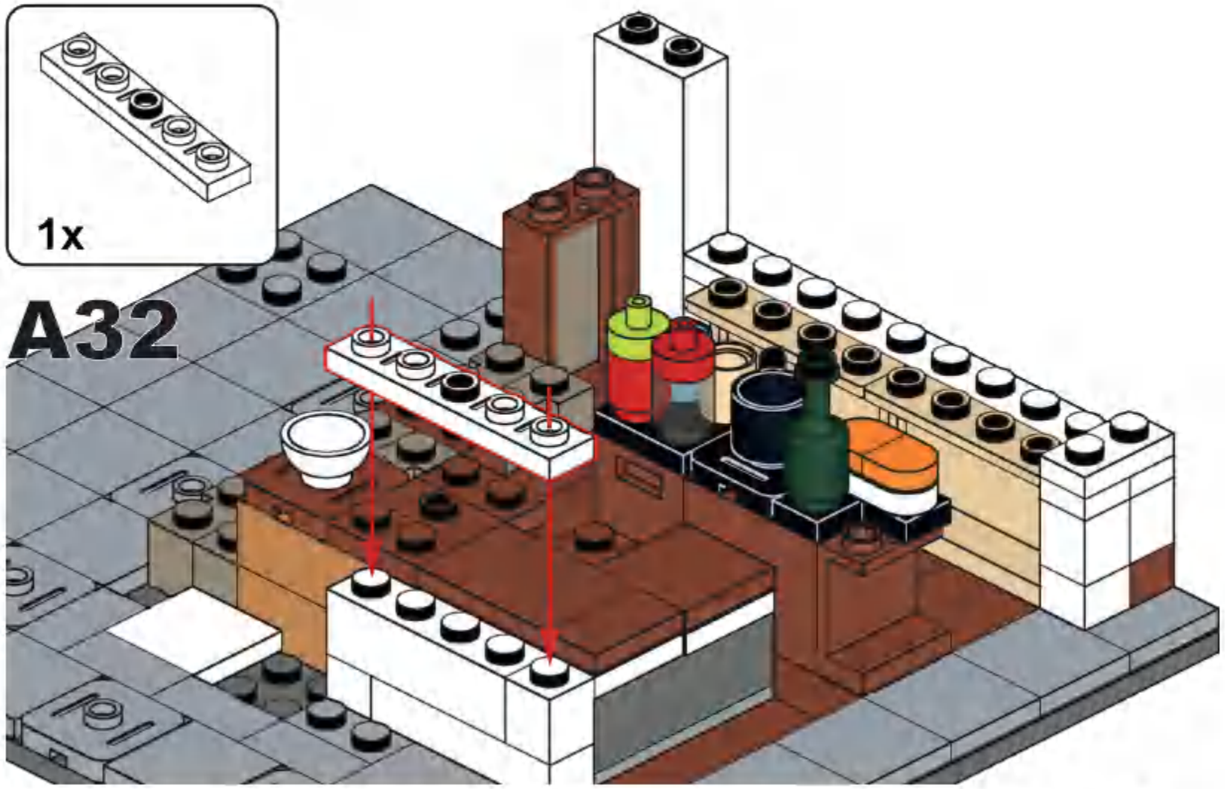

A33

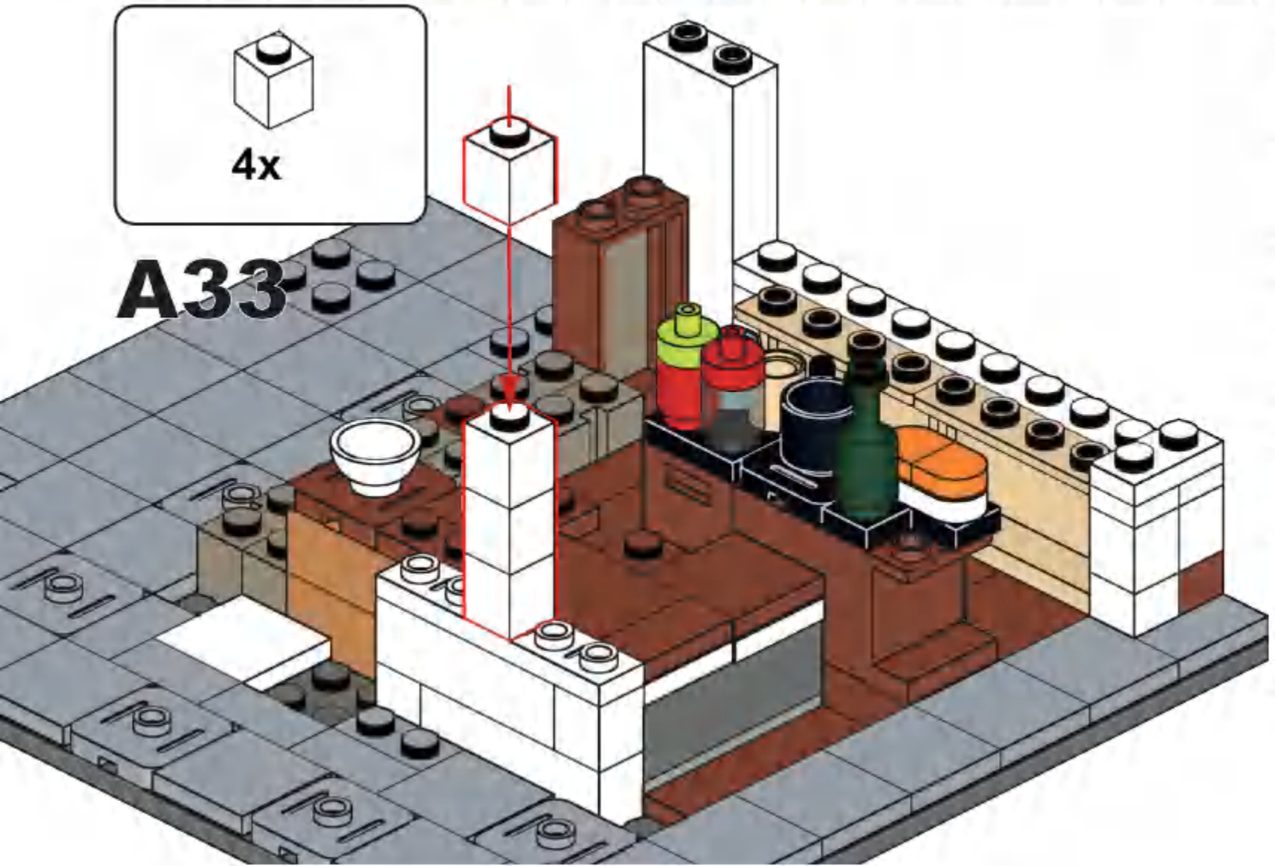

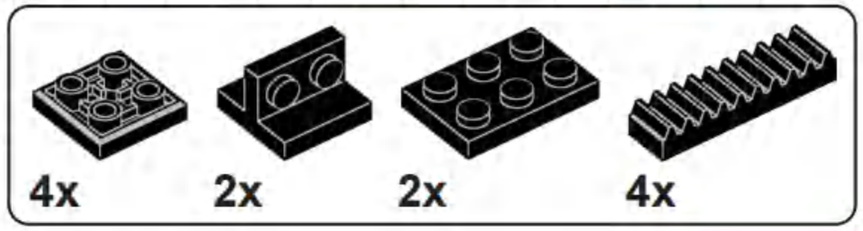

A34

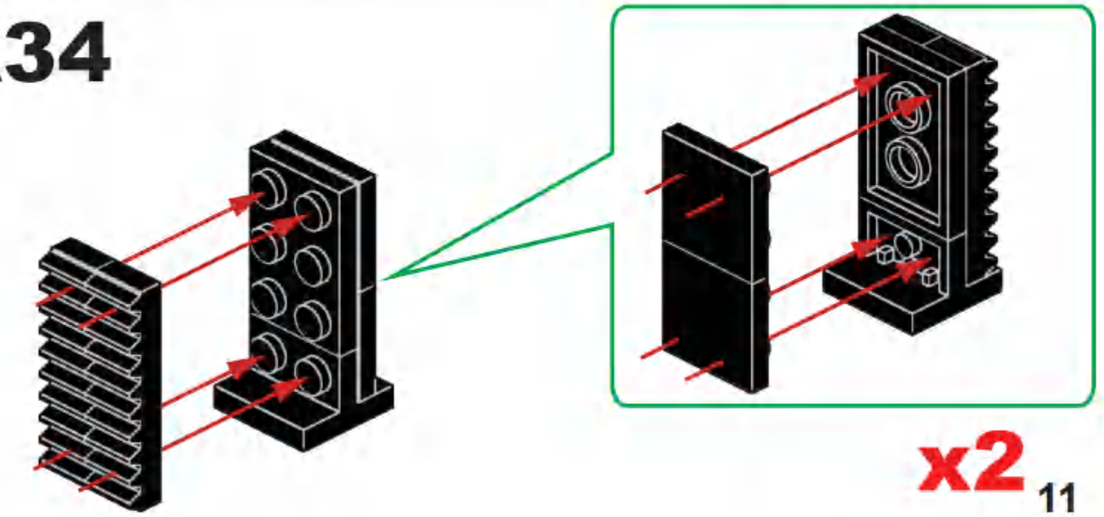

A35

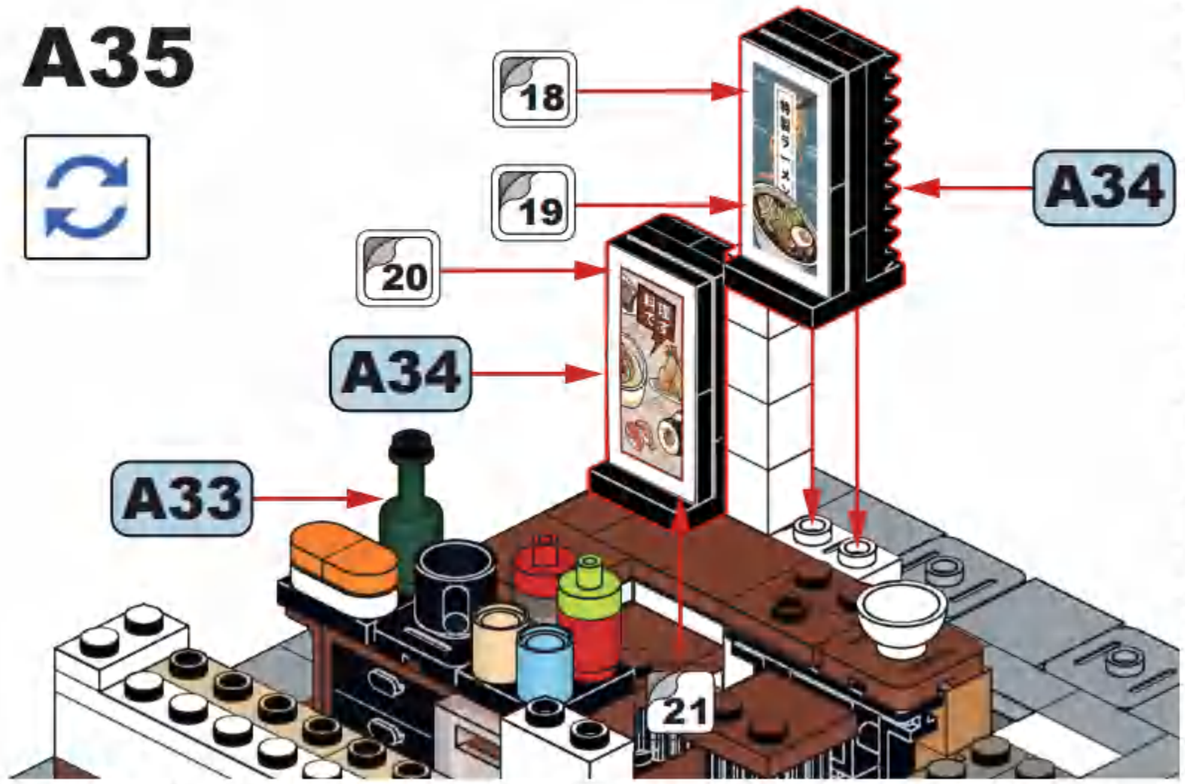

A36

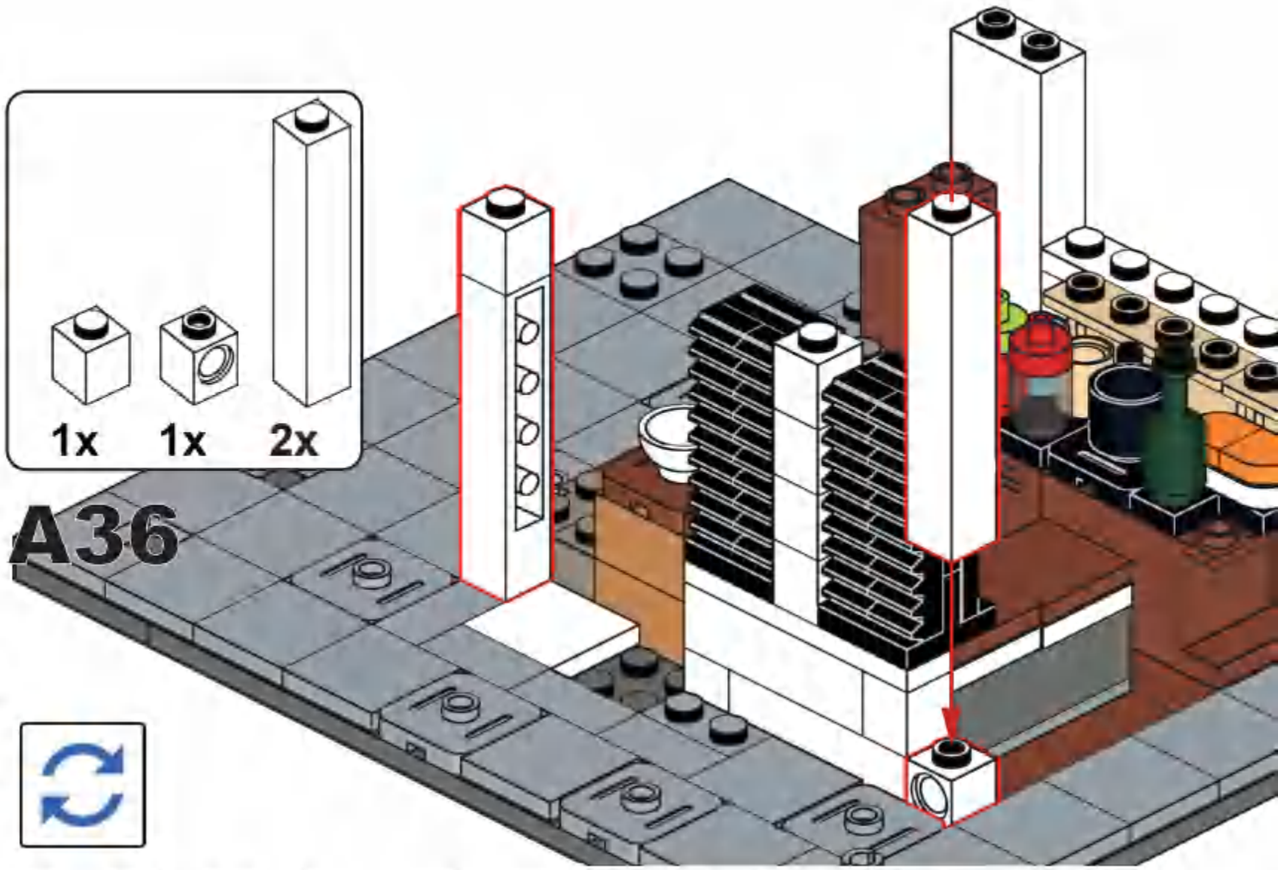

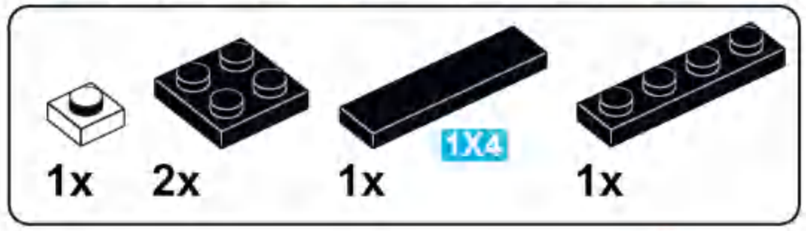

A37

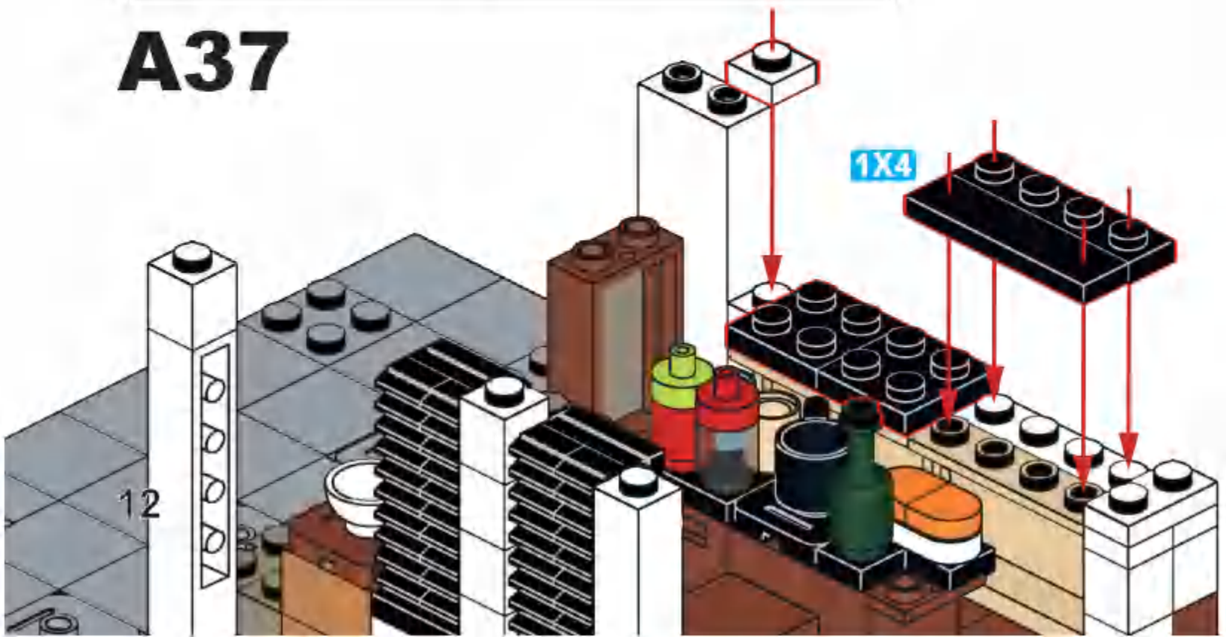

A38

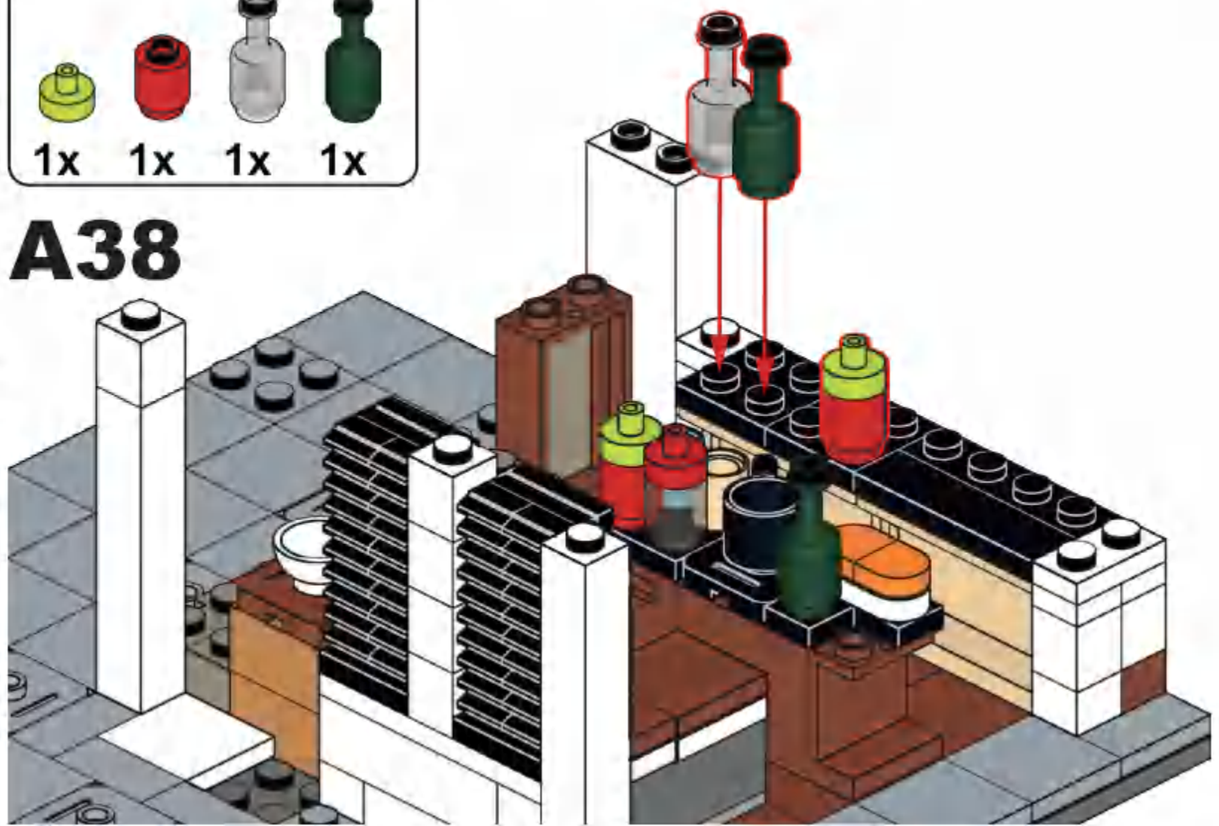

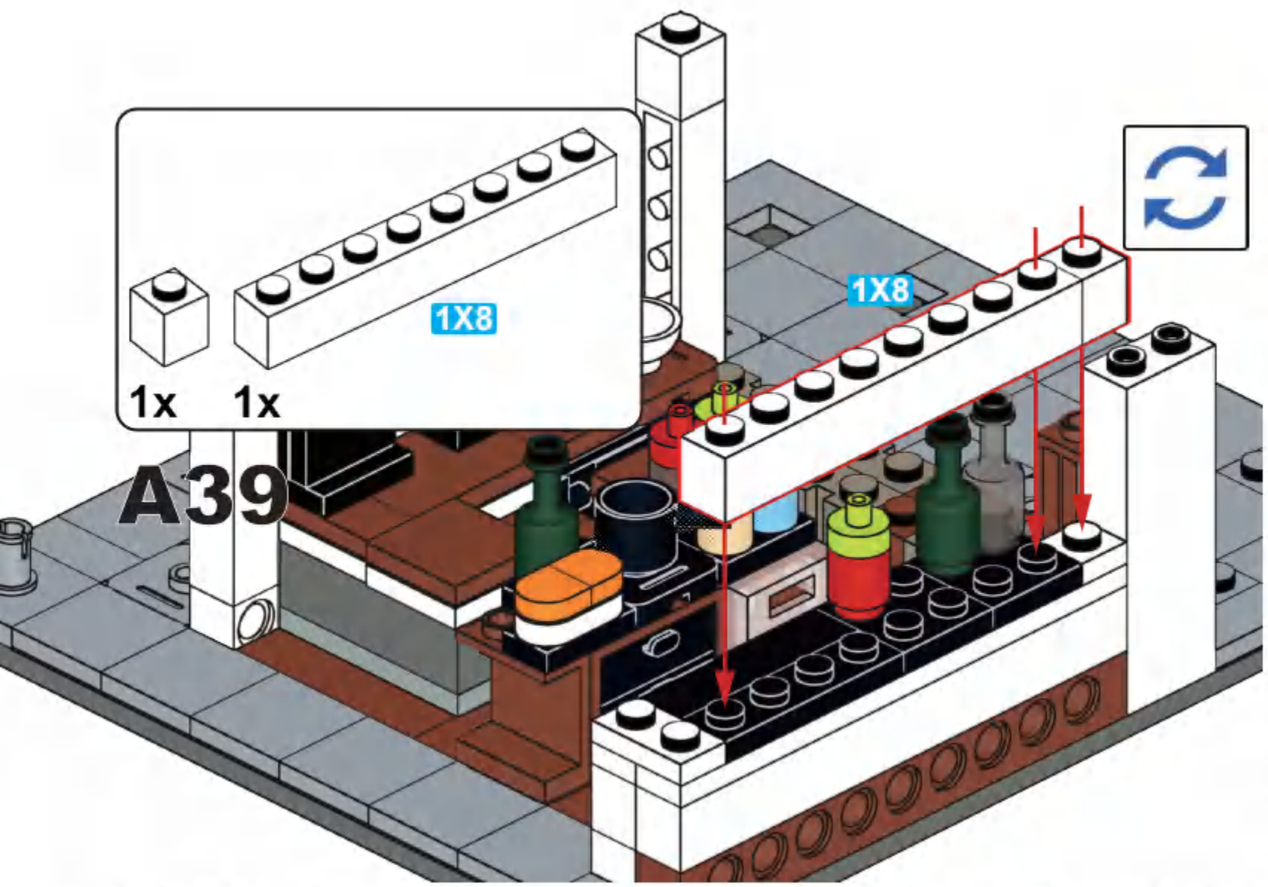

A39

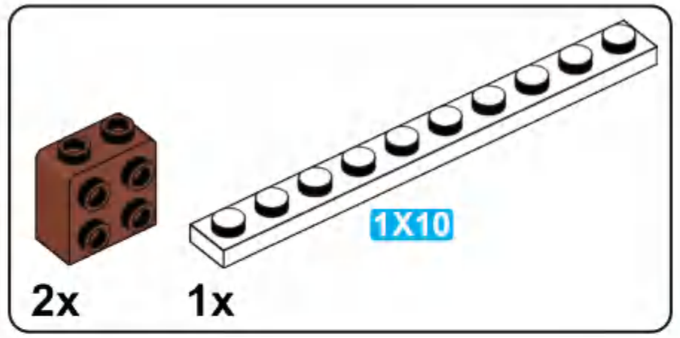

A40

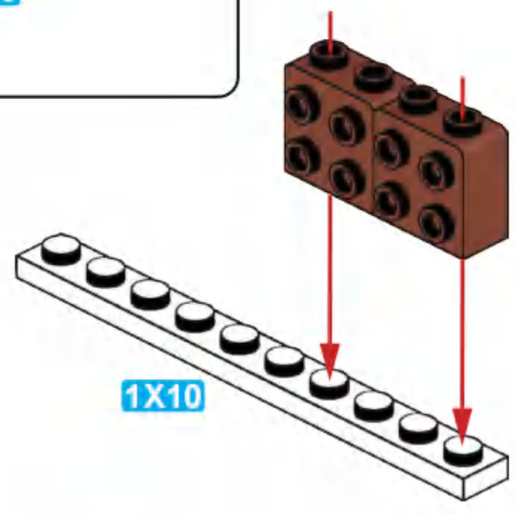

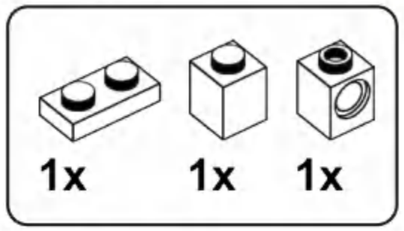

A41

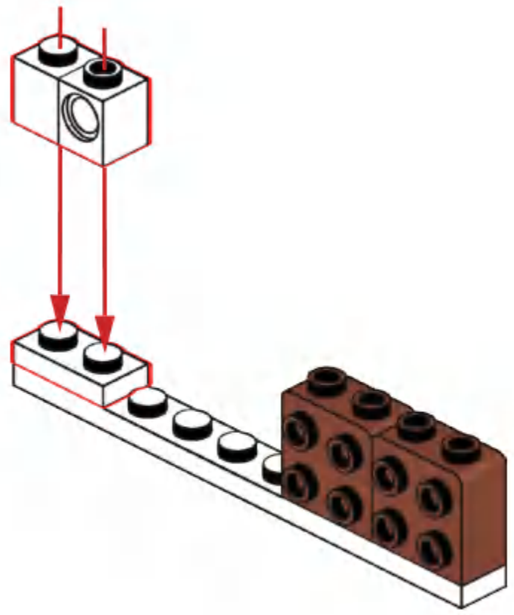

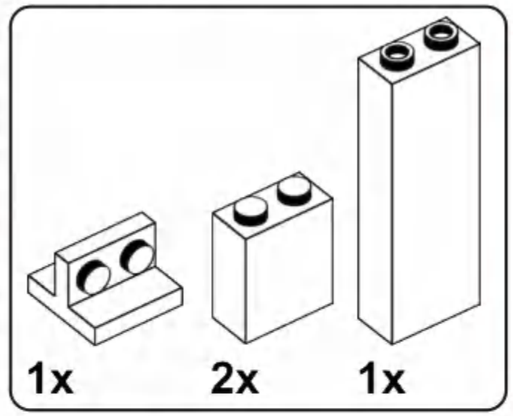

A42

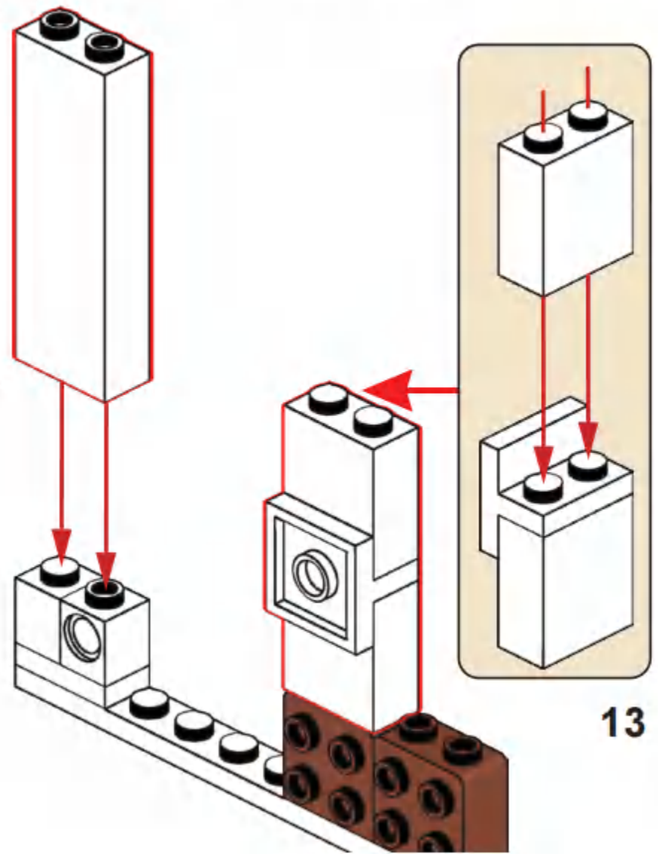

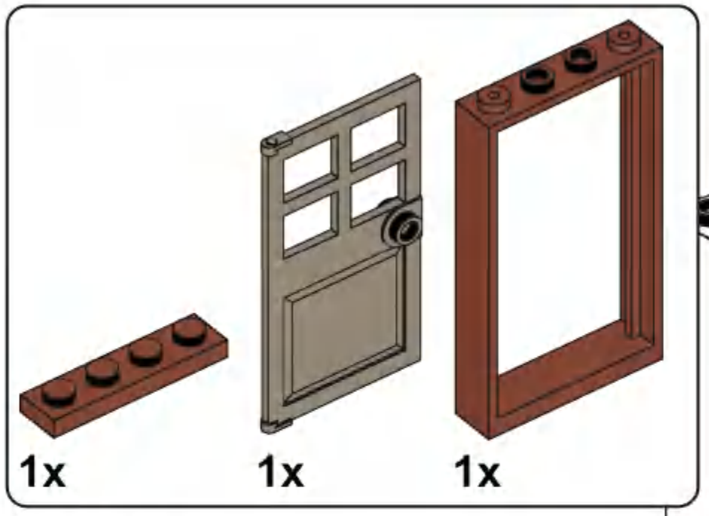

A43

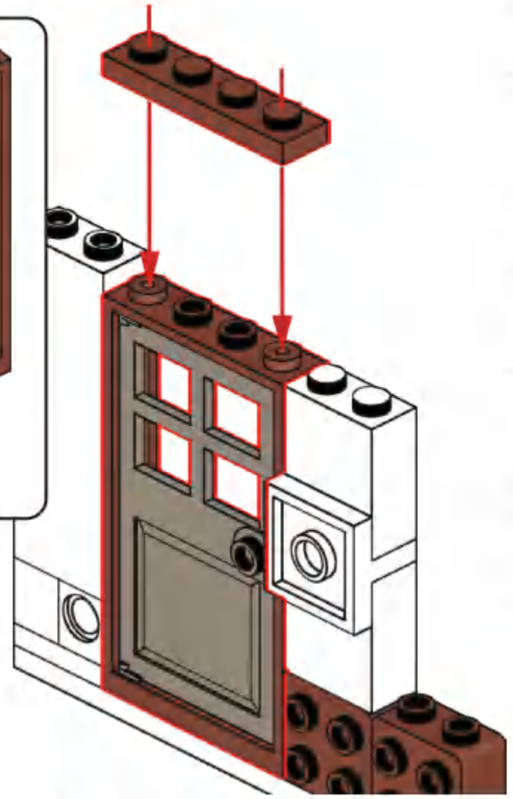

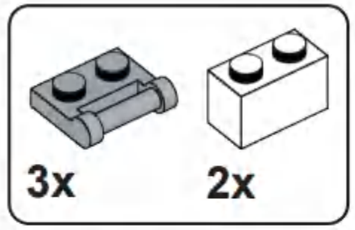

A44

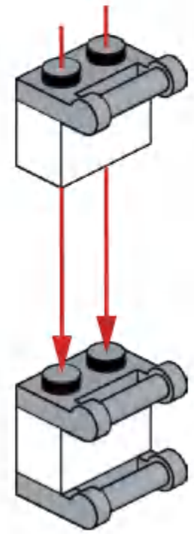

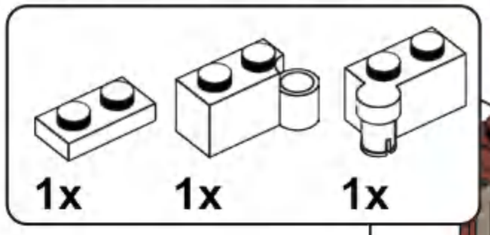

A45

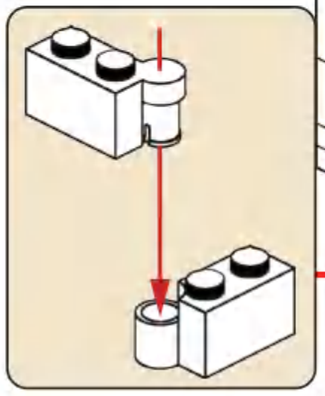

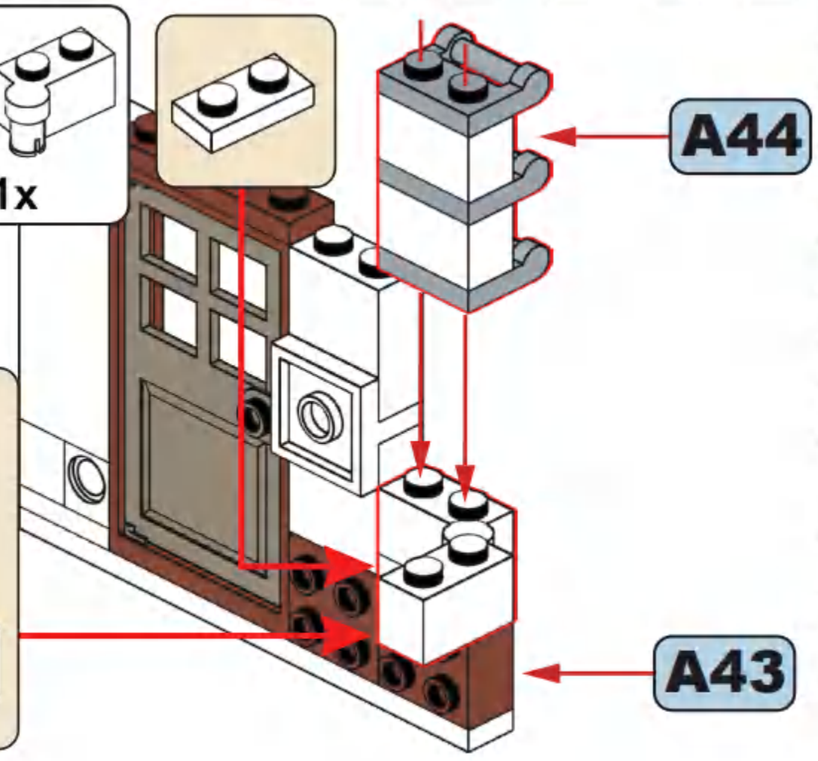

A46

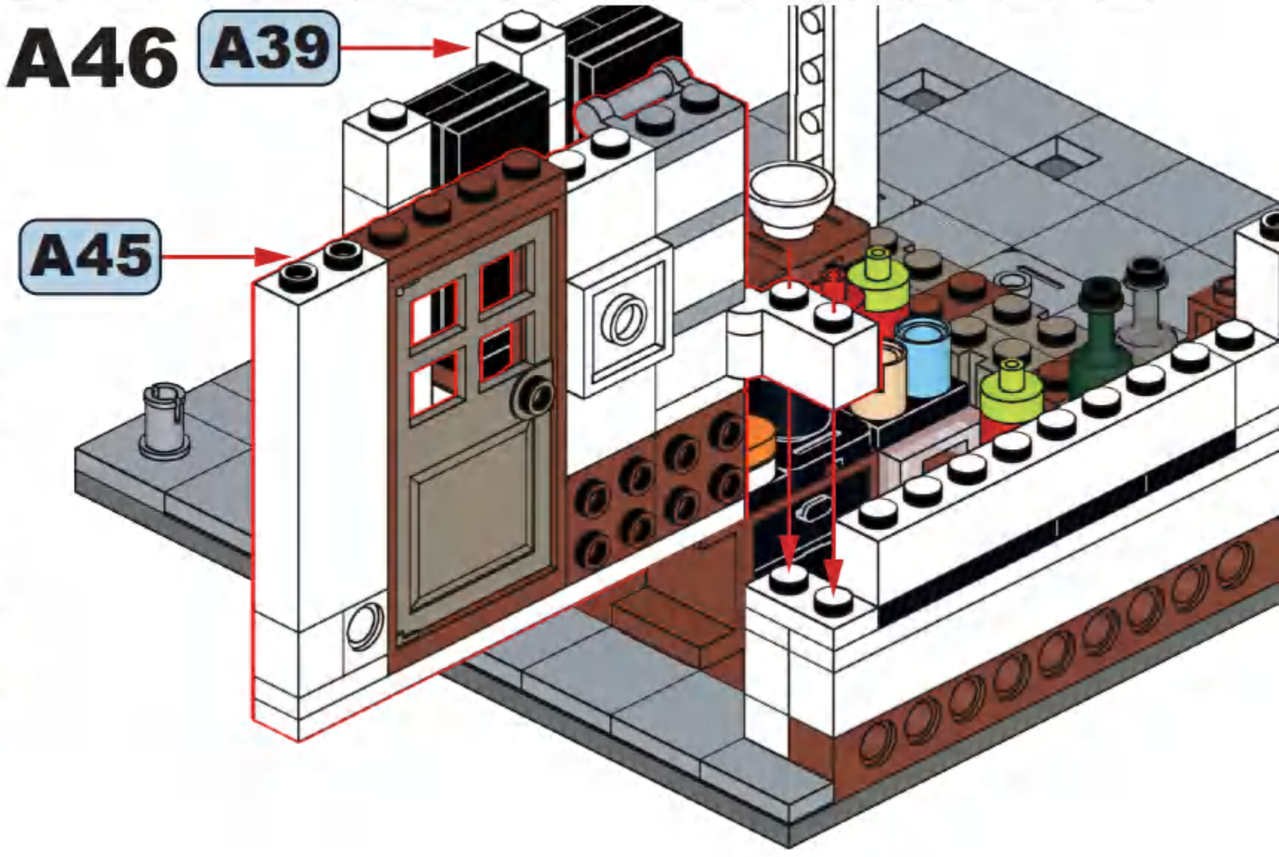

1x 1x

1X10

1X10

A47

5x 1x 1x

A48

2x 1x 1x

4L

A49

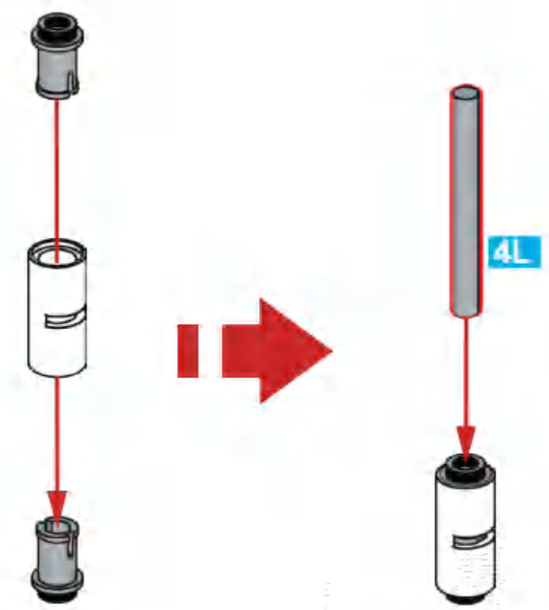

1x 1x 1x

A50

A49

A48

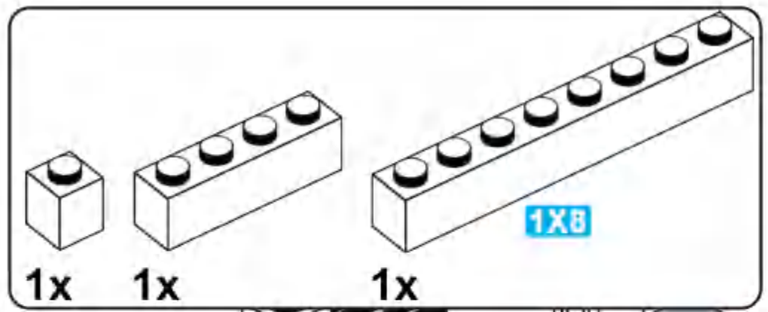

A51

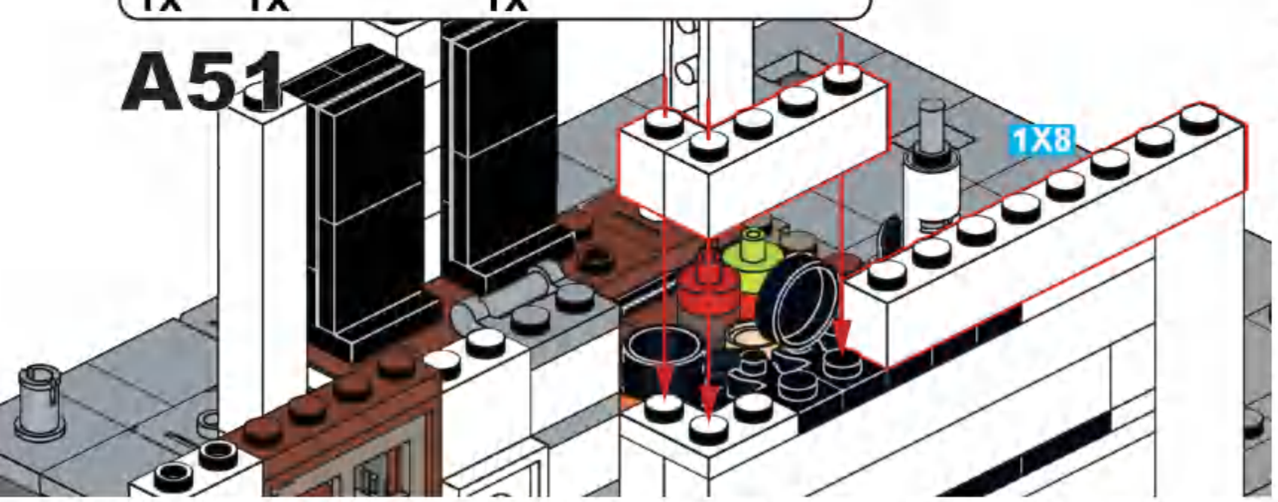

A52

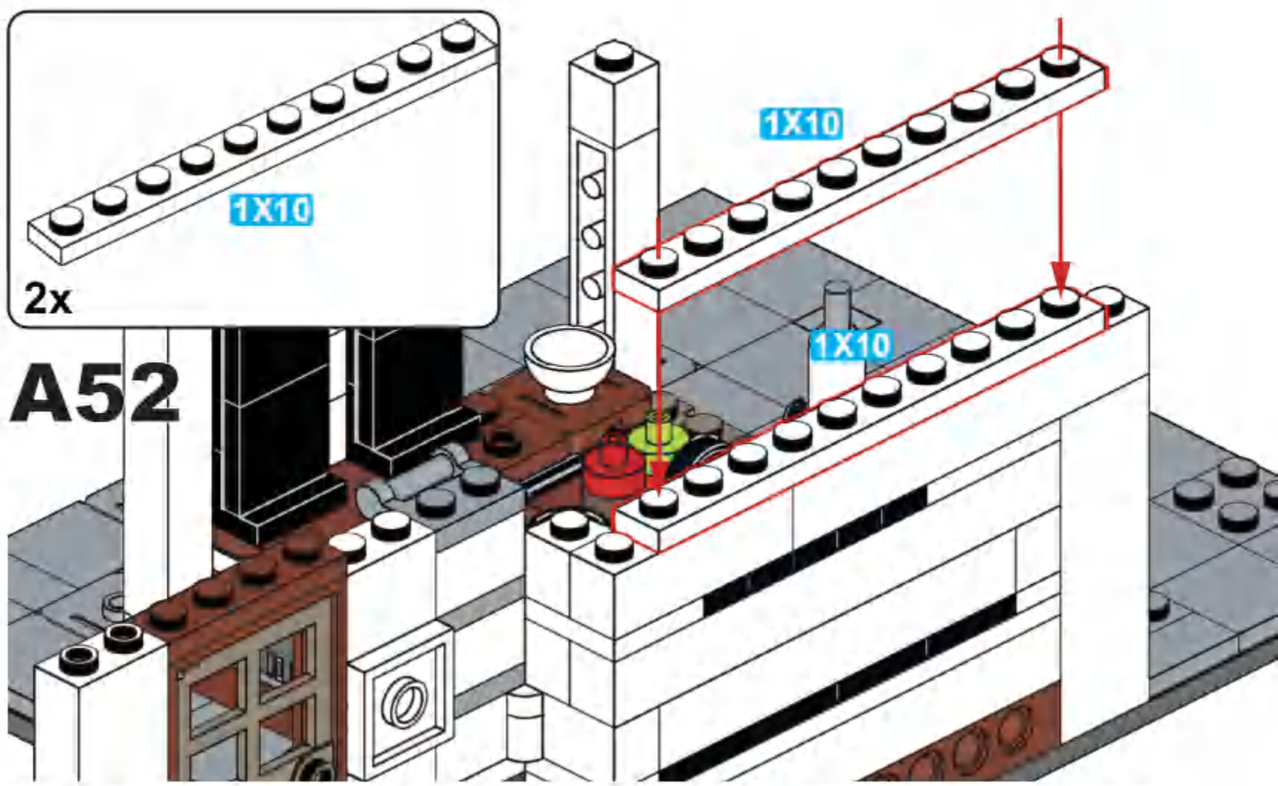

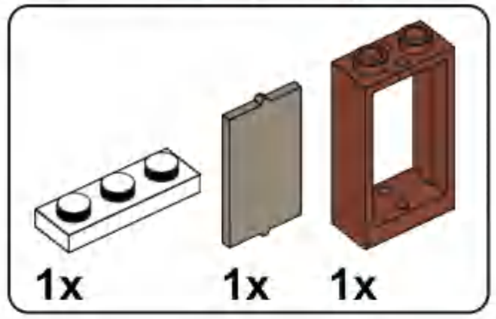

A53

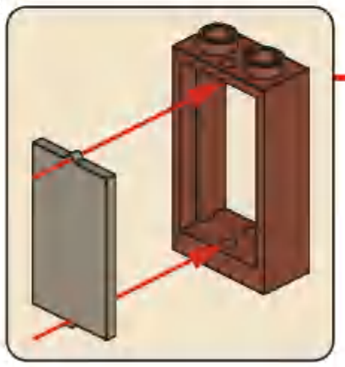

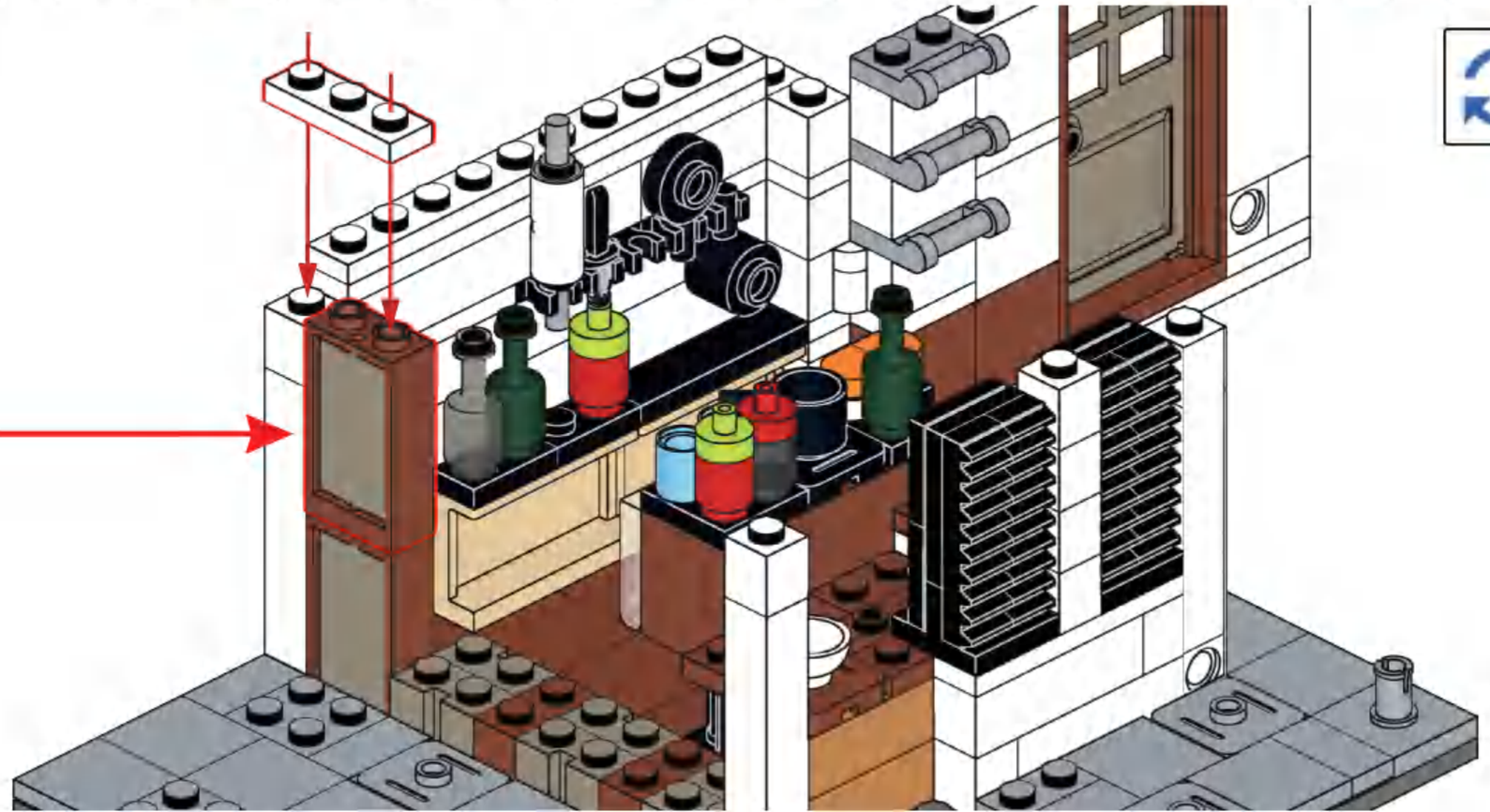

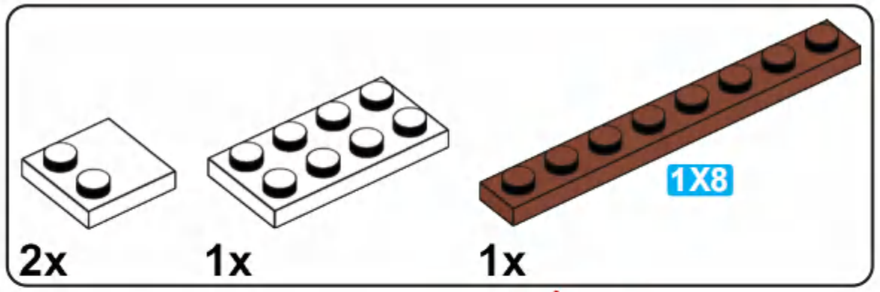

A54

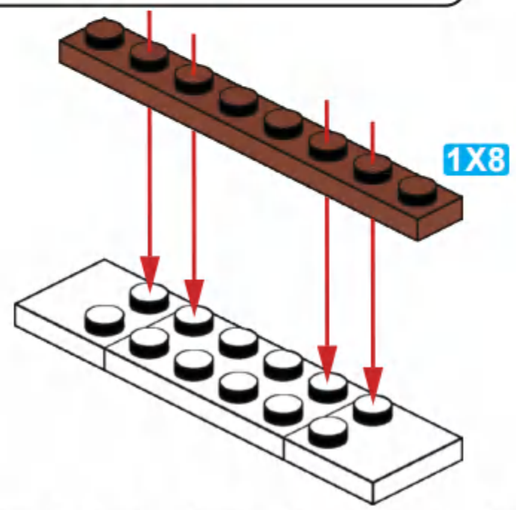

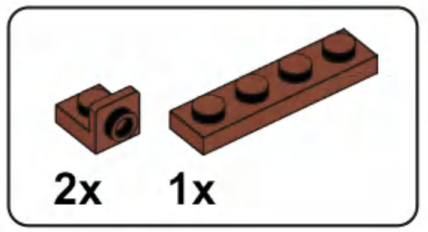

A55

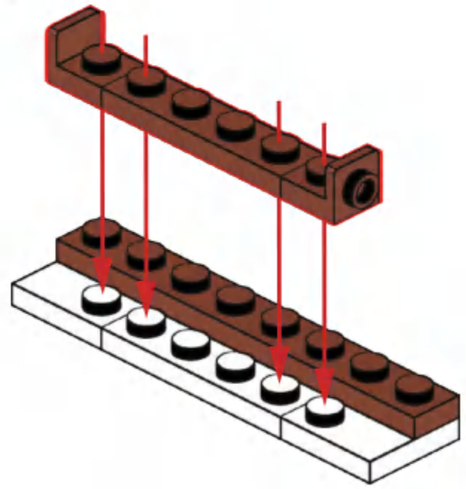

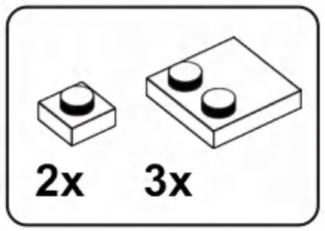

A56

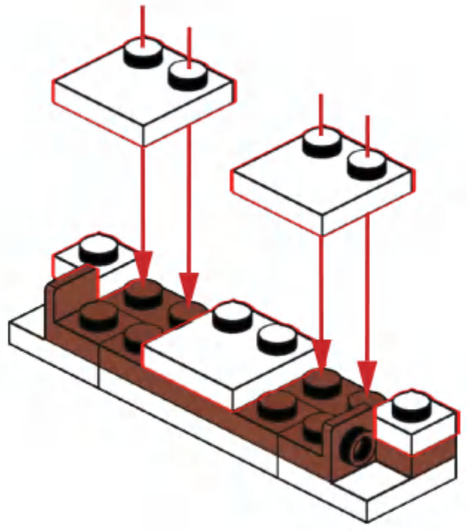

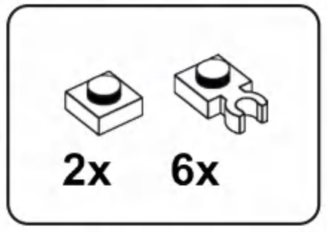

A57

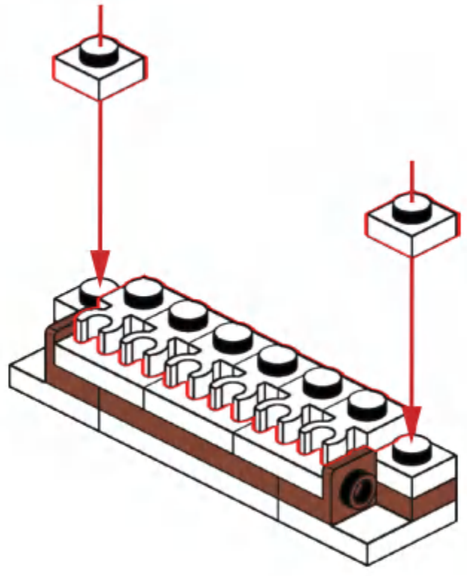

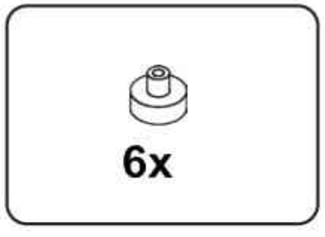

A58

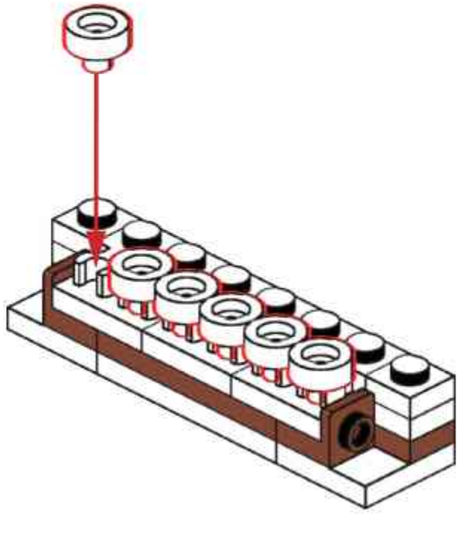

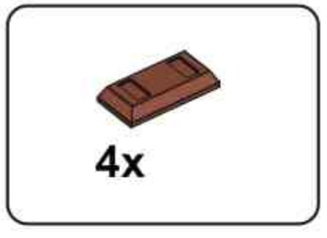

A59

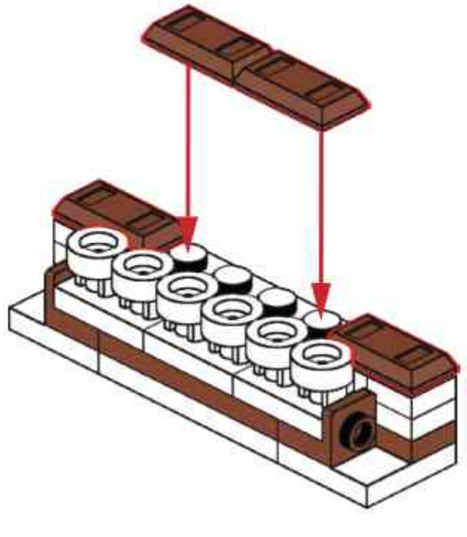

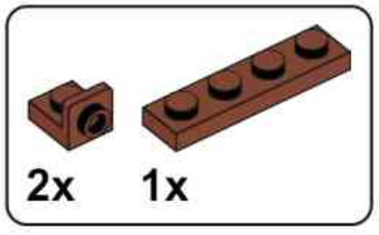

A60

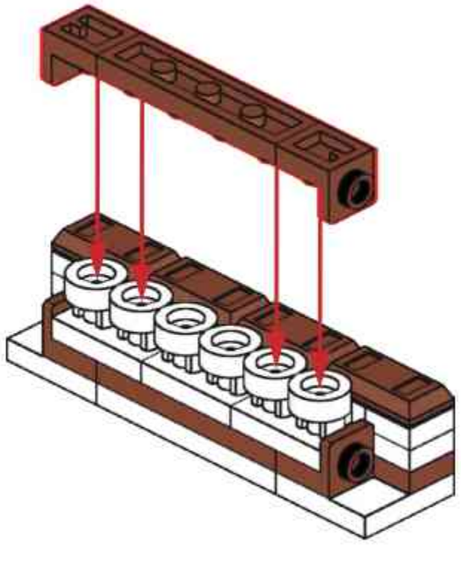

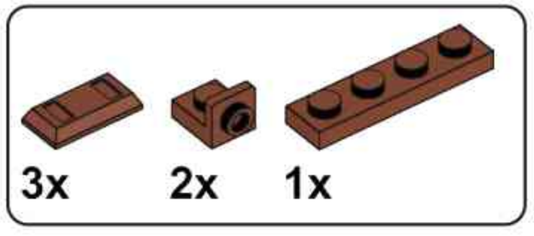

A61

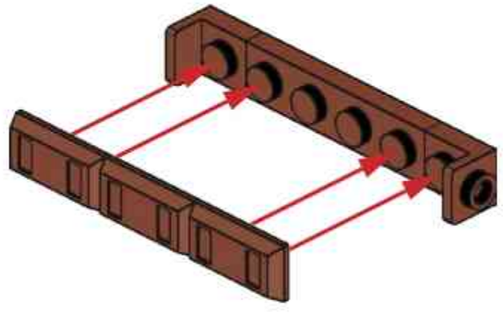

A62

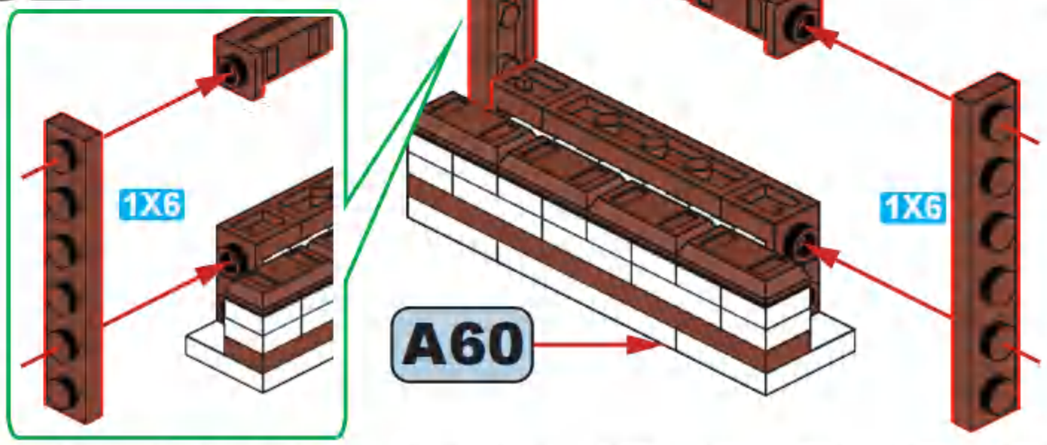

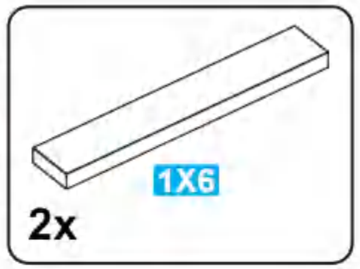

A63

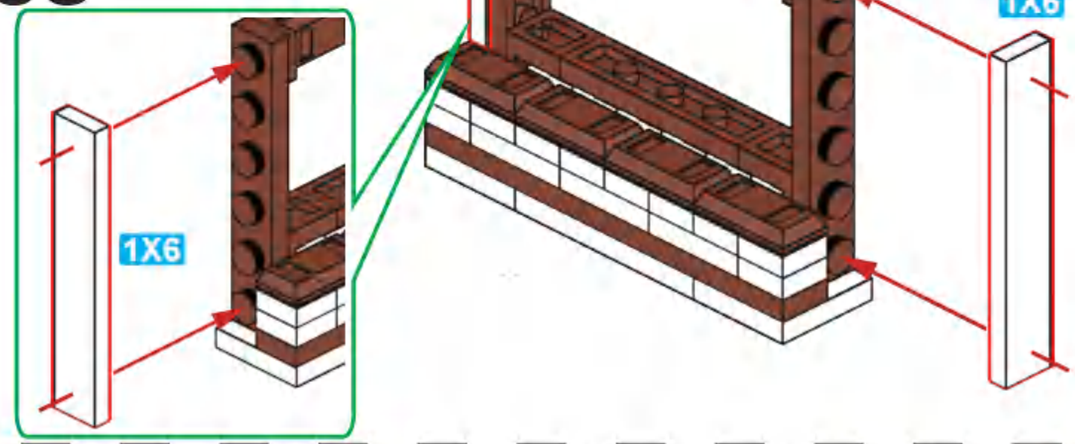

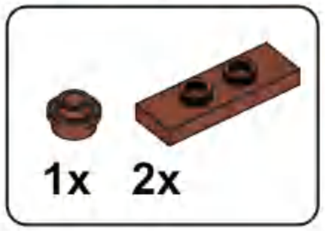

A64

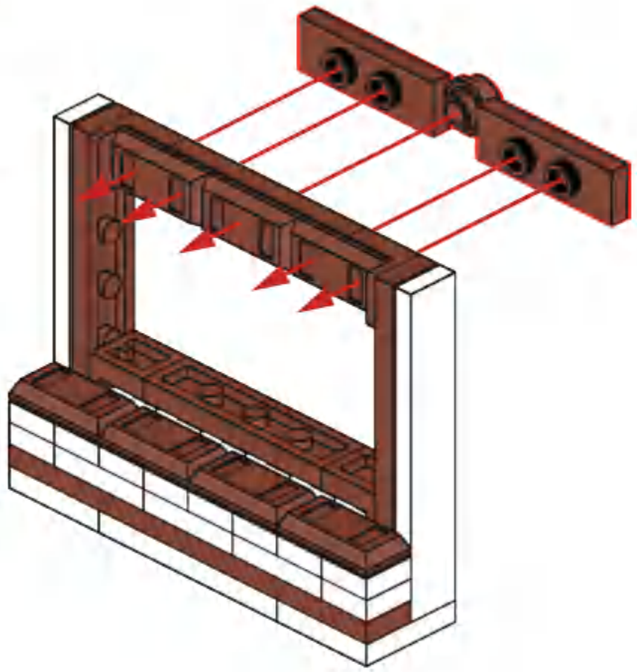

A65

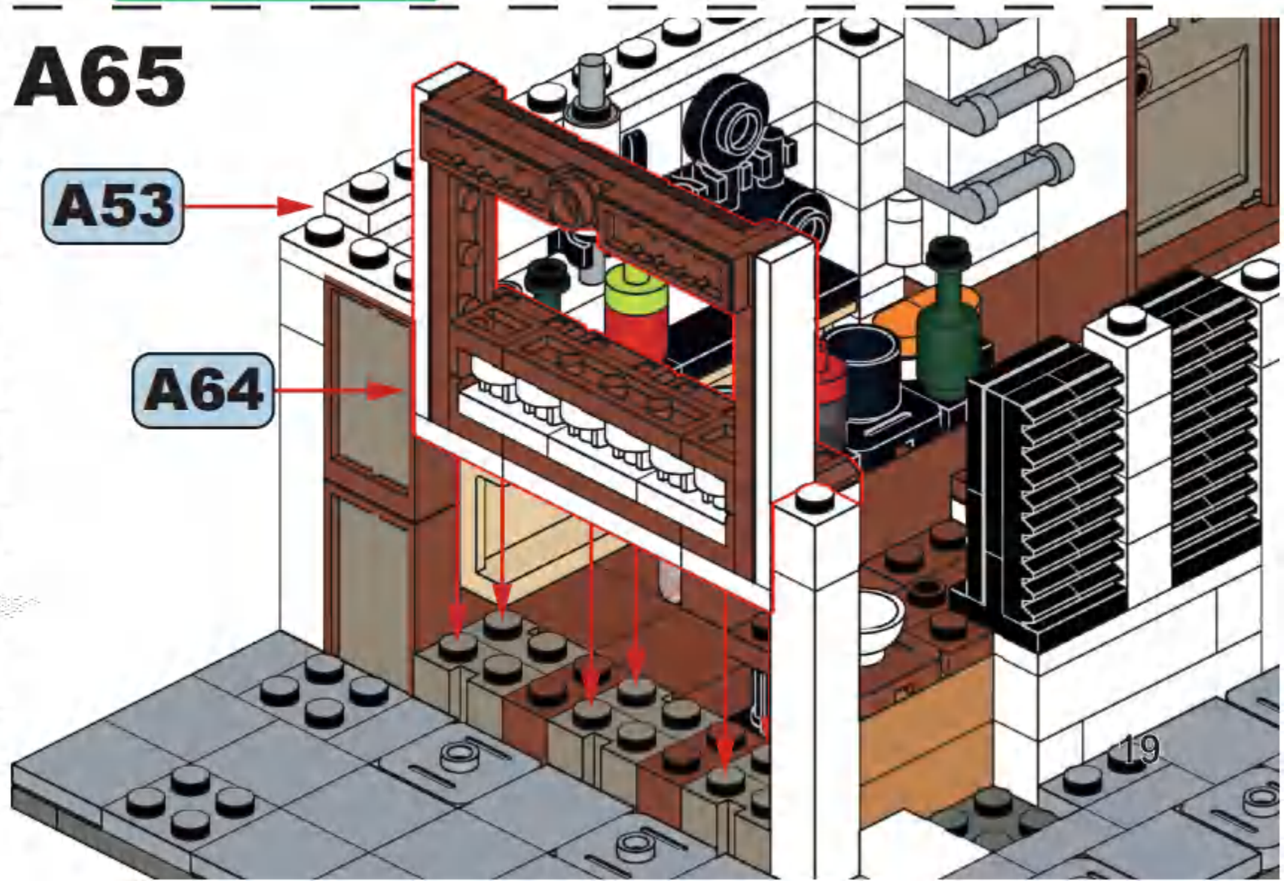

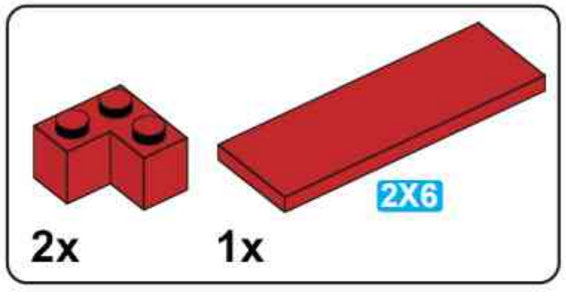

A66

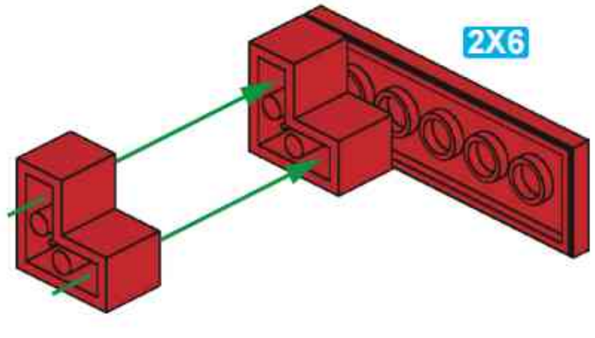

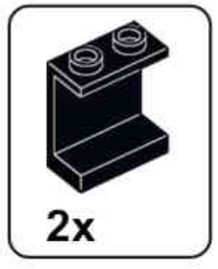

A67

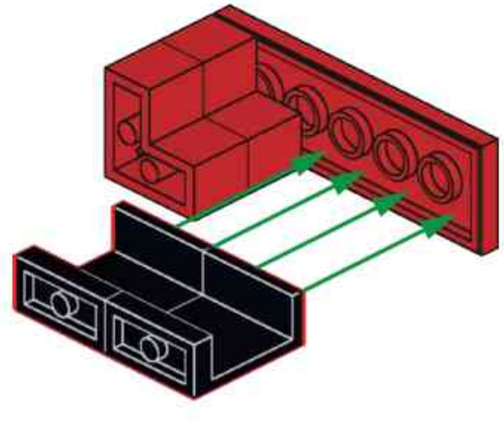

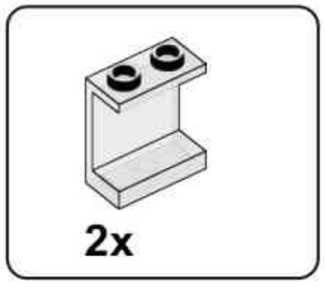

A68

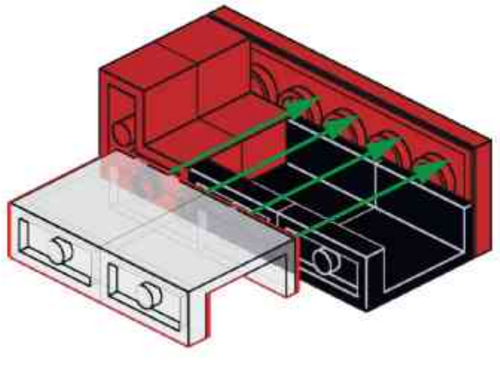

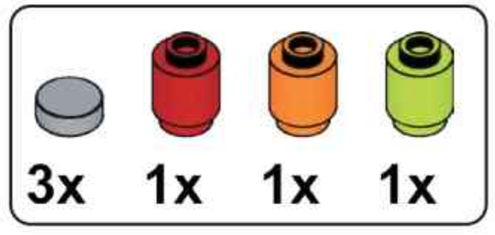

A69

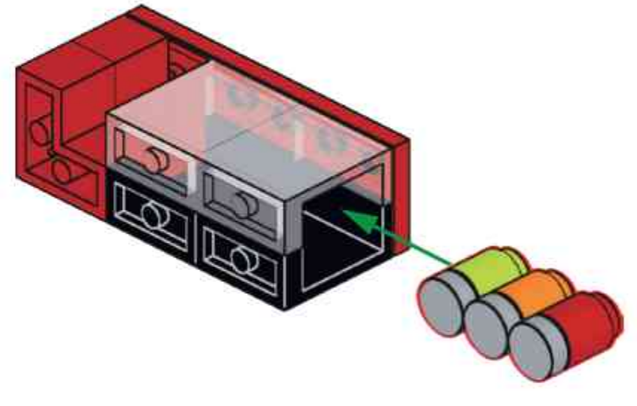

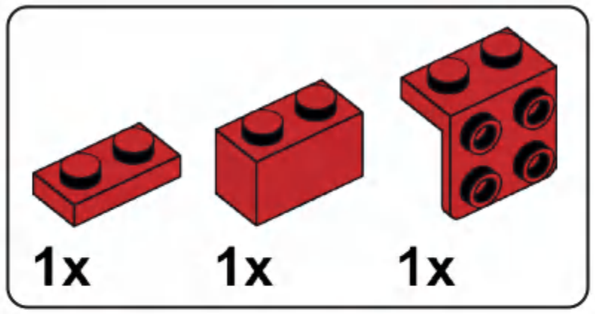

A70

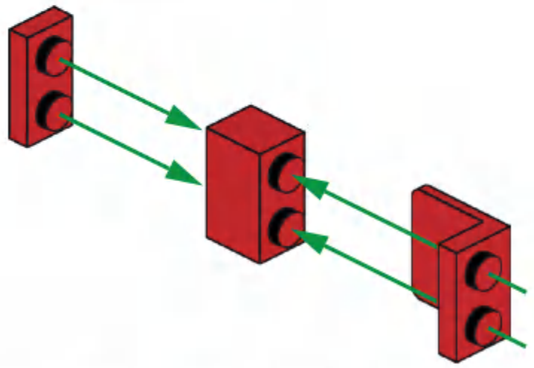

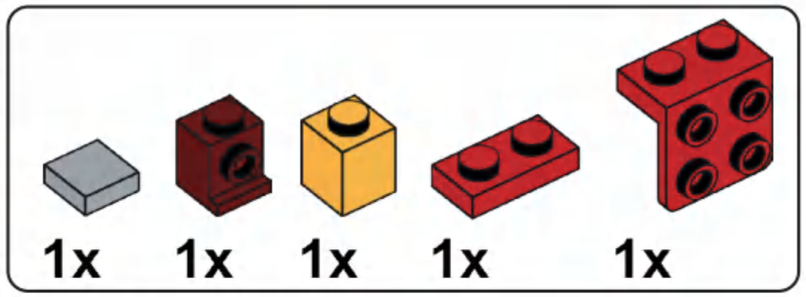

A71

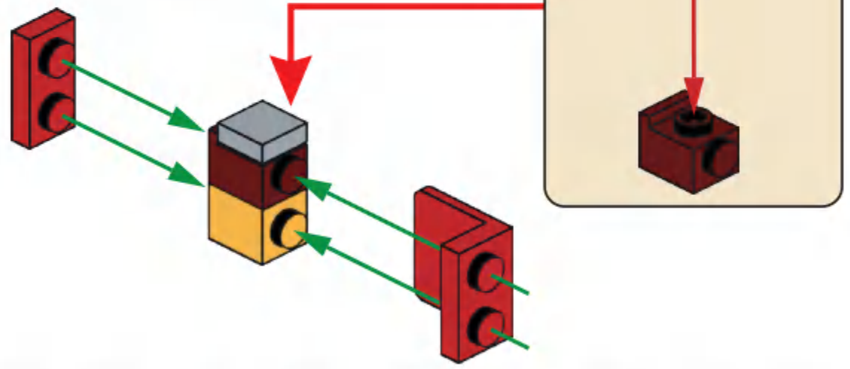

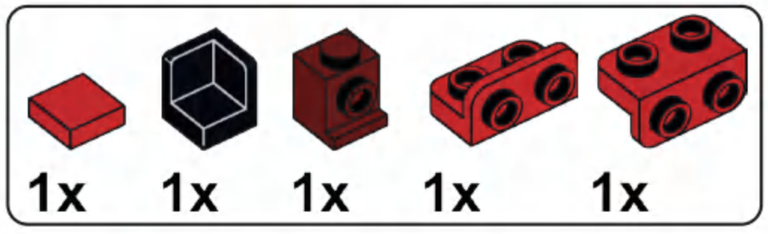

A72

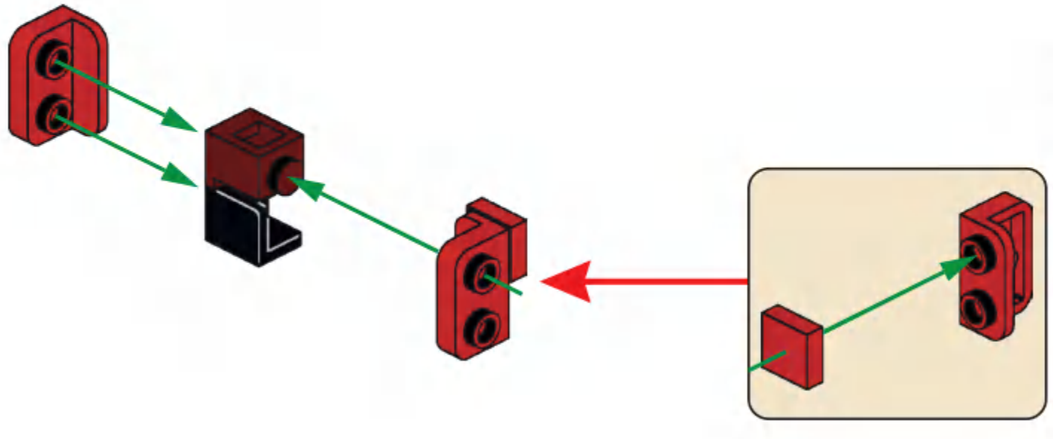

A73

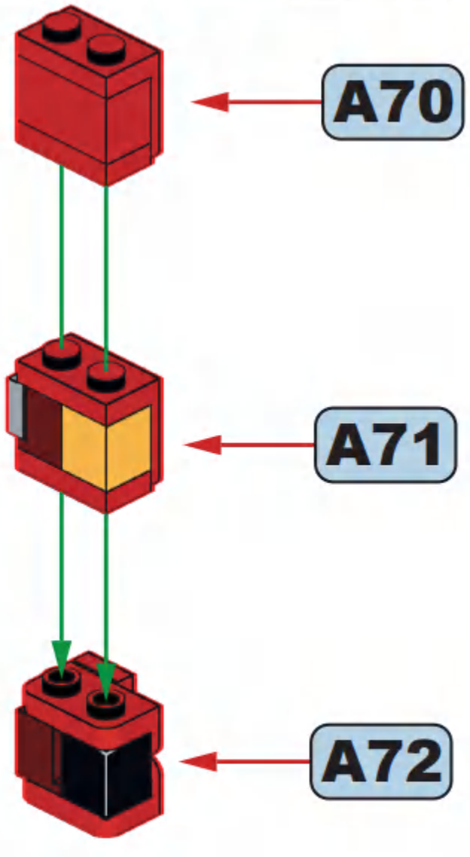

A74

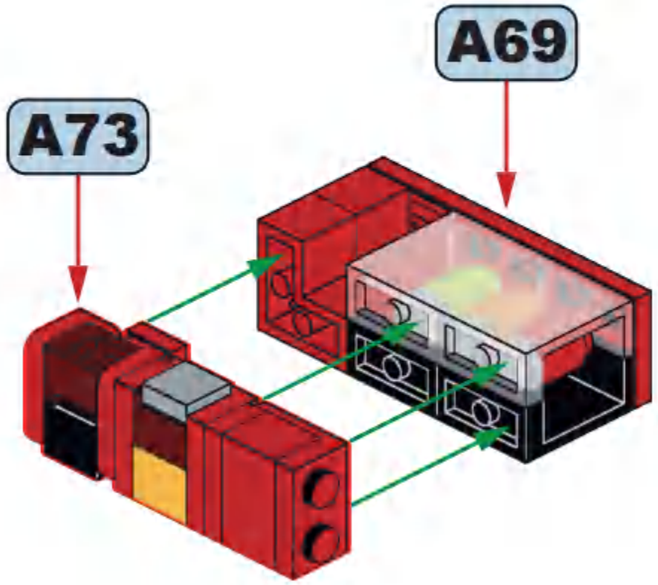

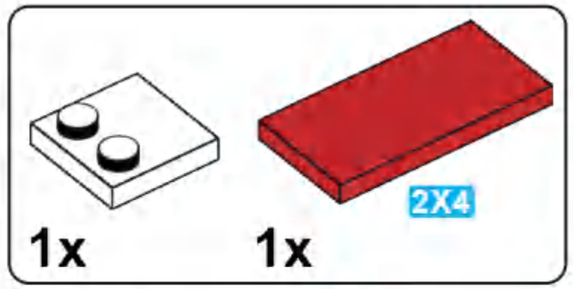

A75

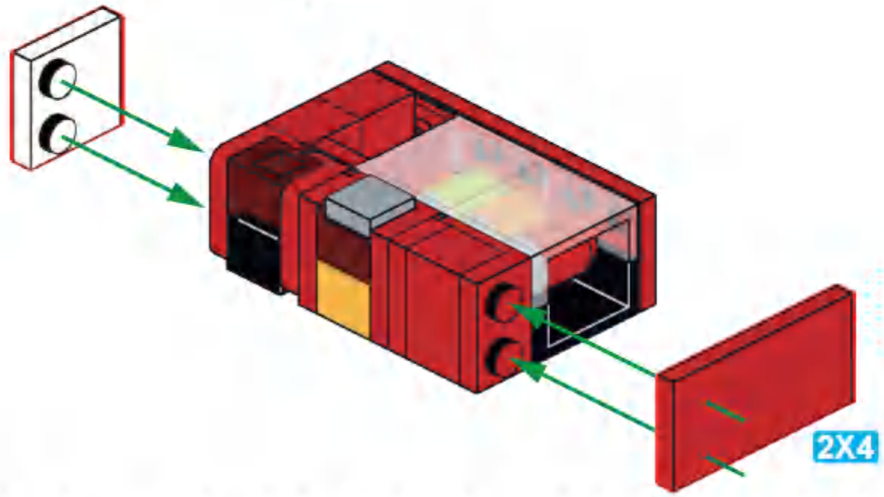

A76

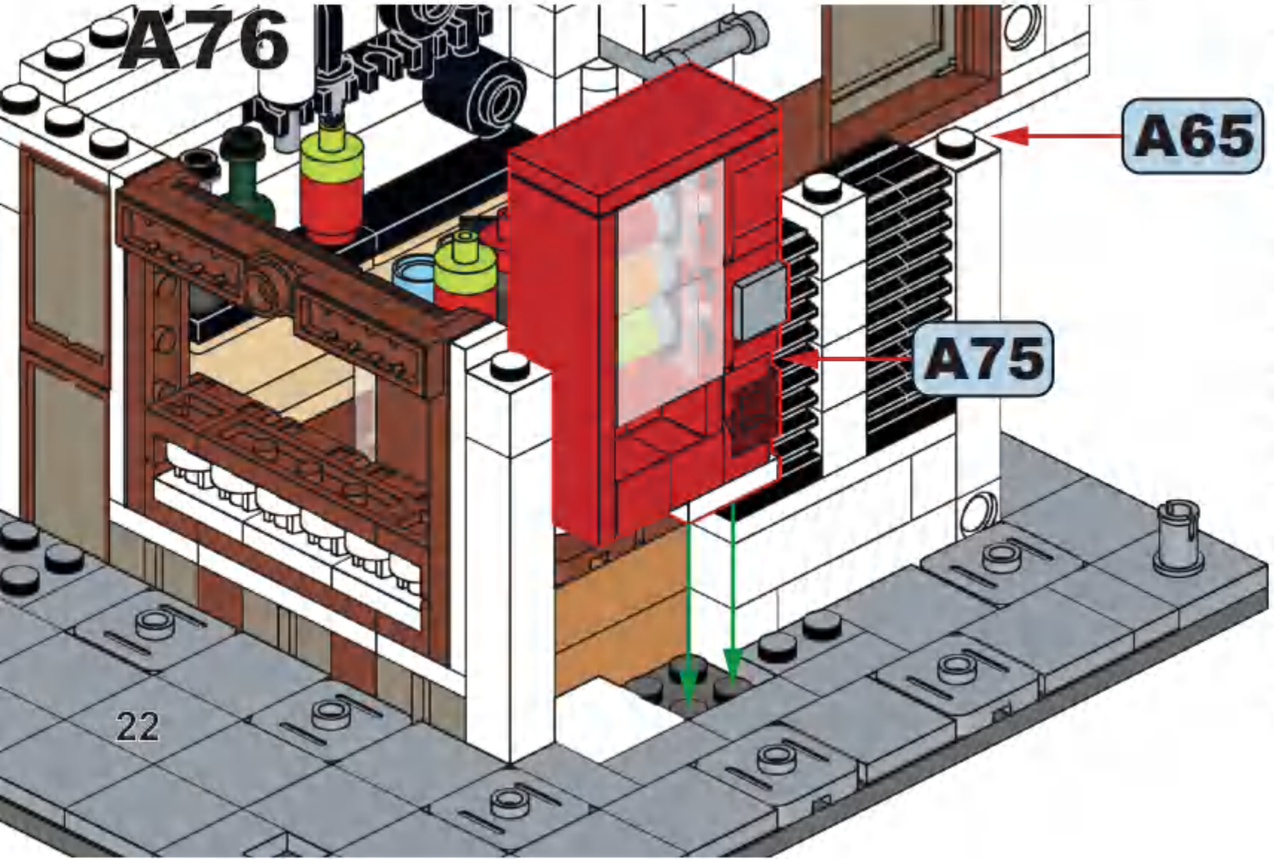

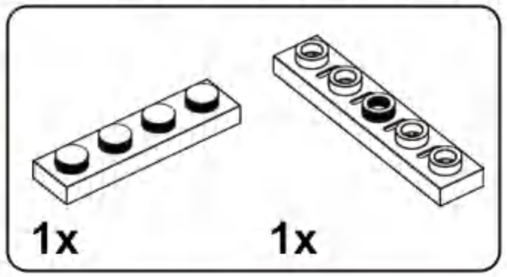

A77

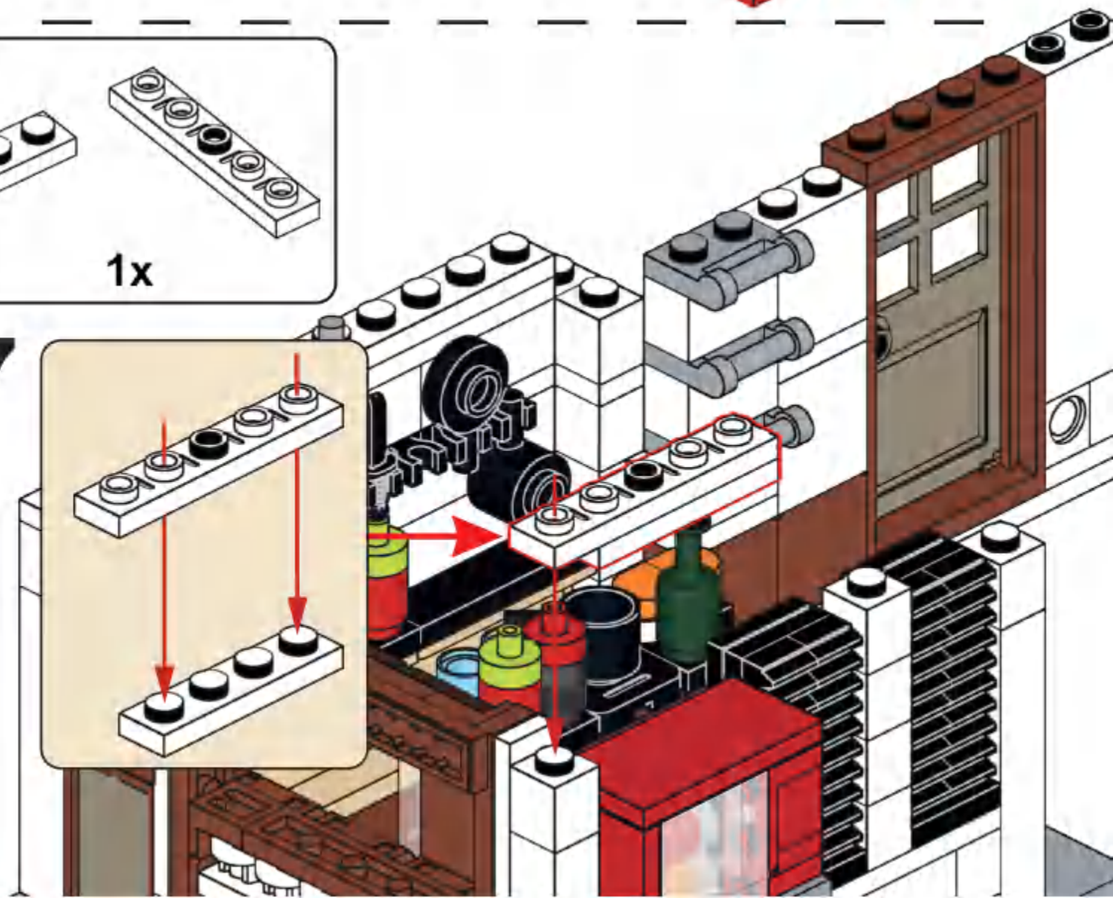

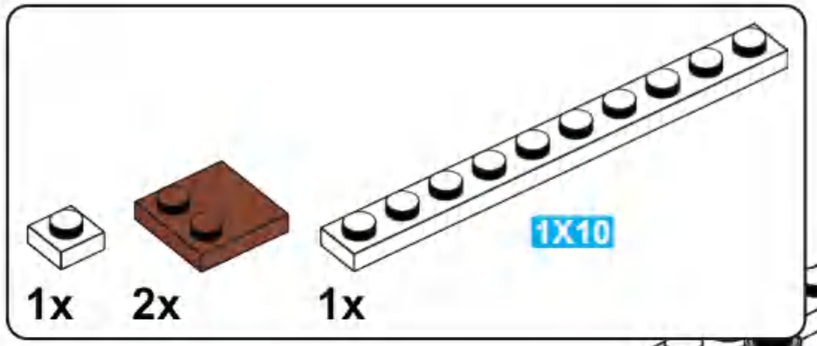

A78

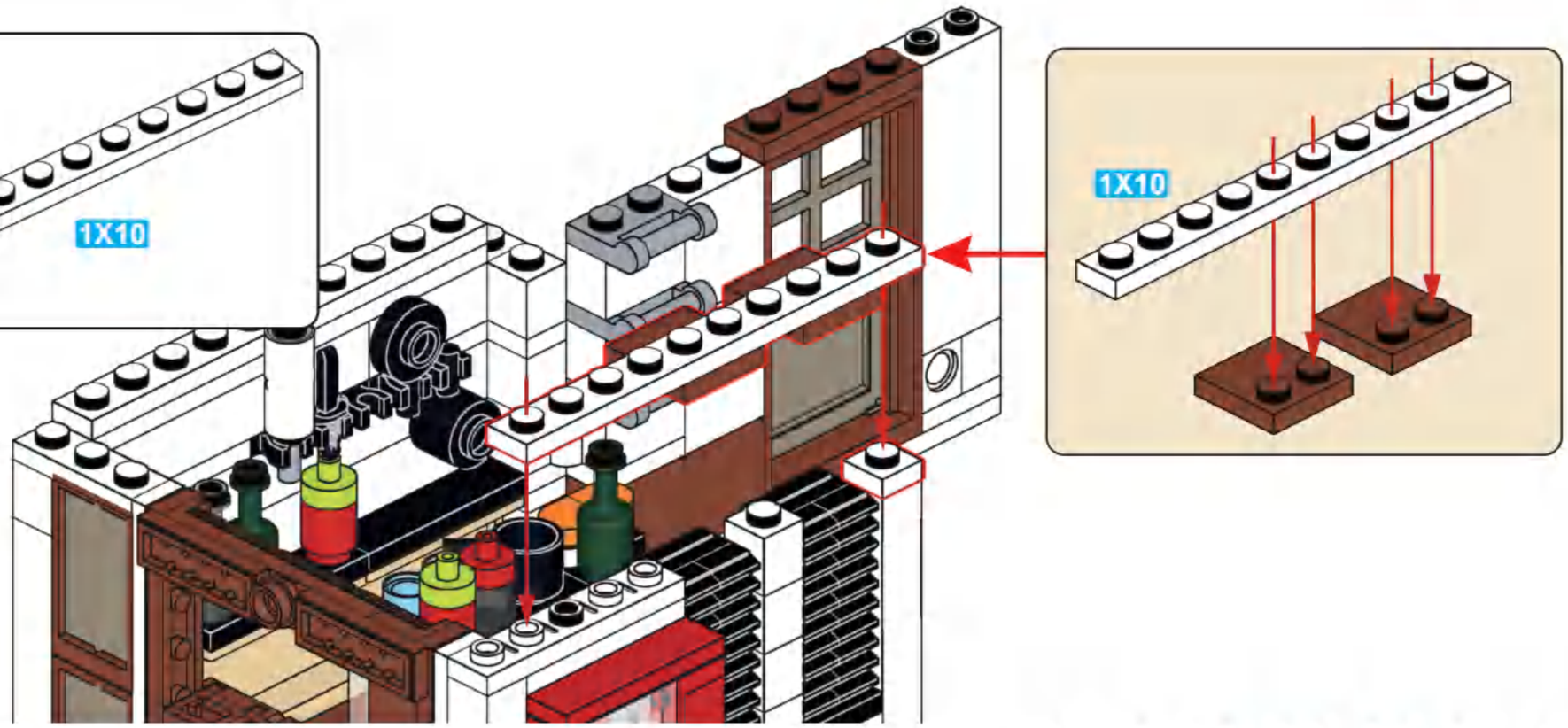

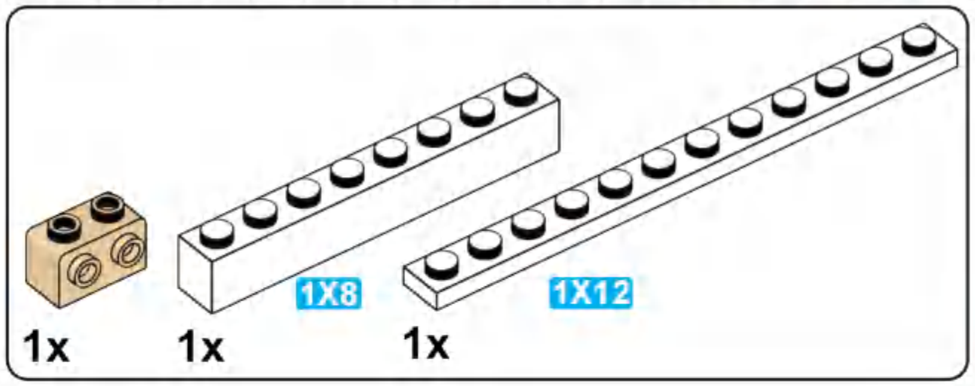

A79

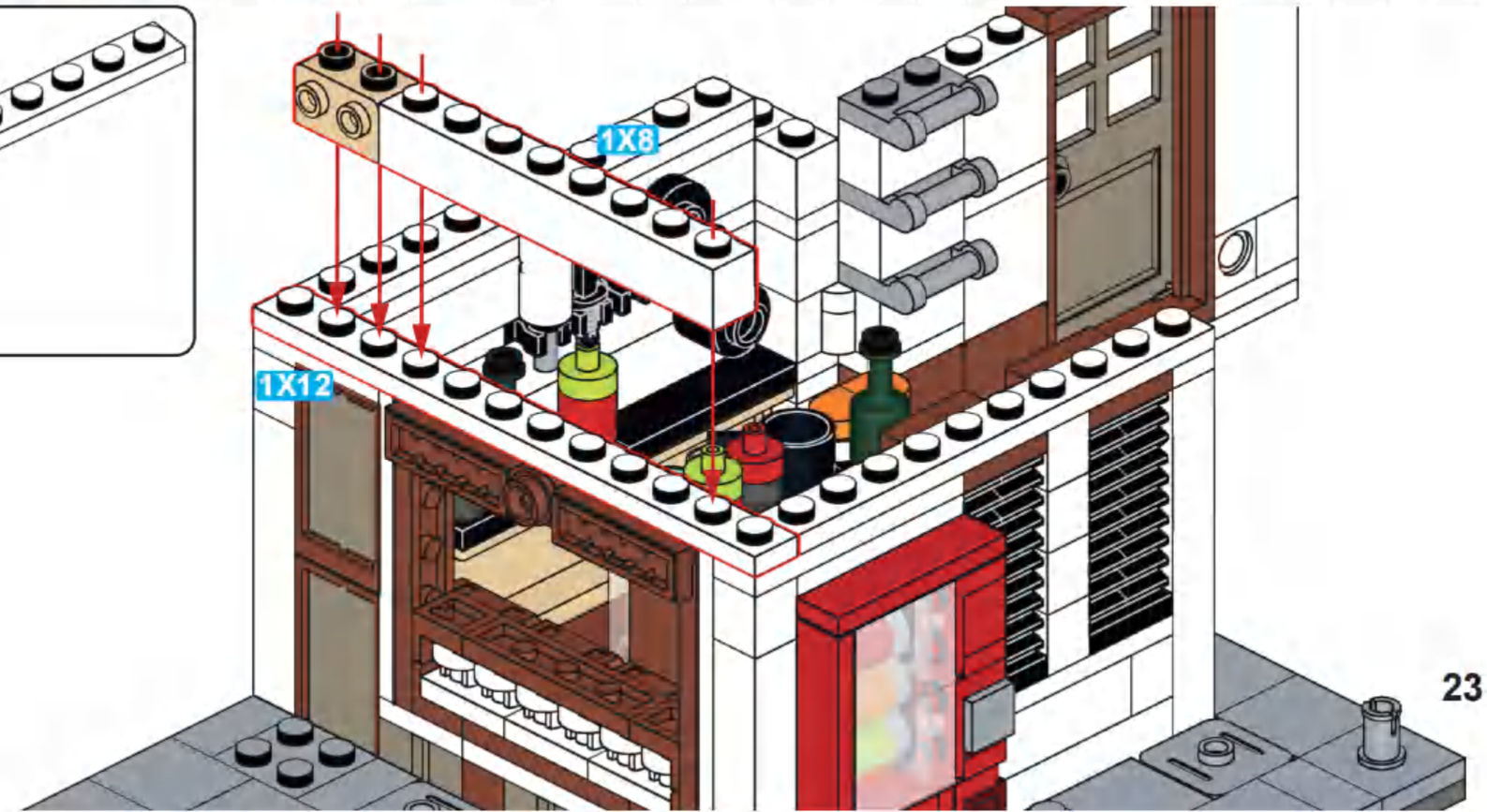

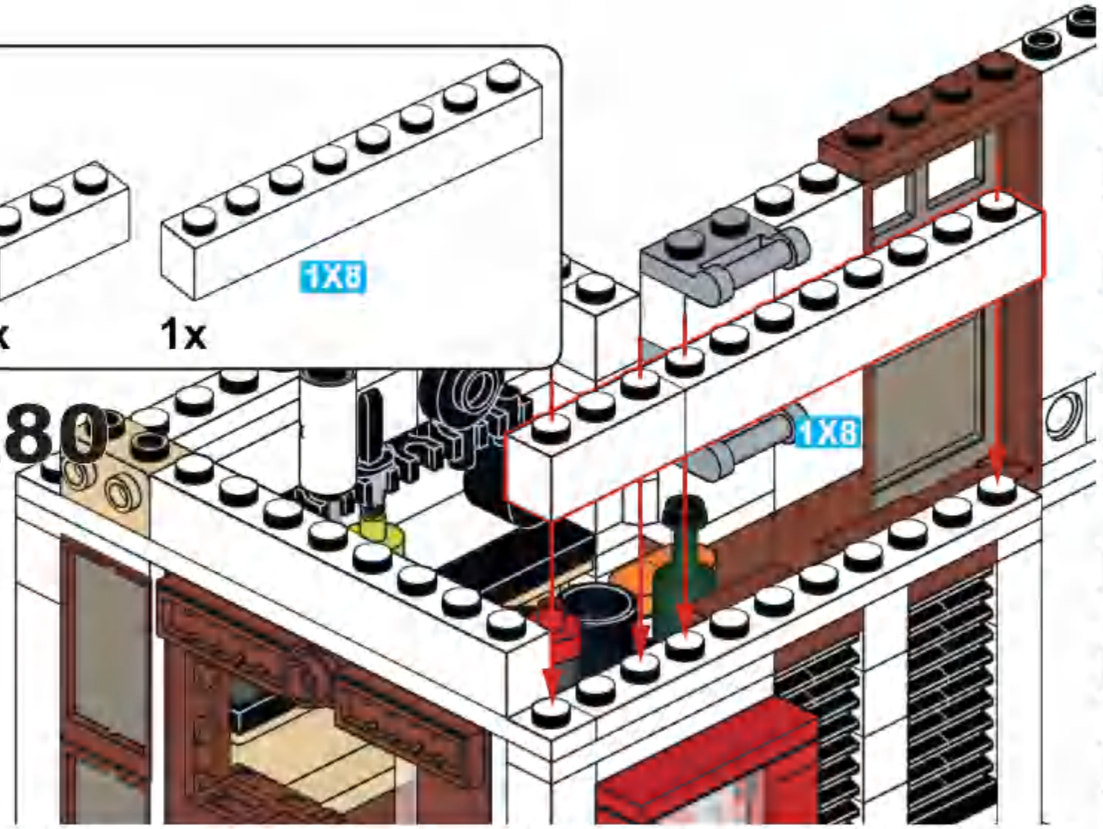

A80

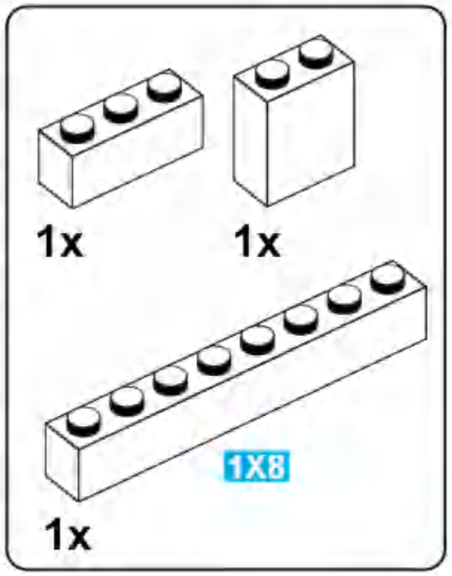

A81

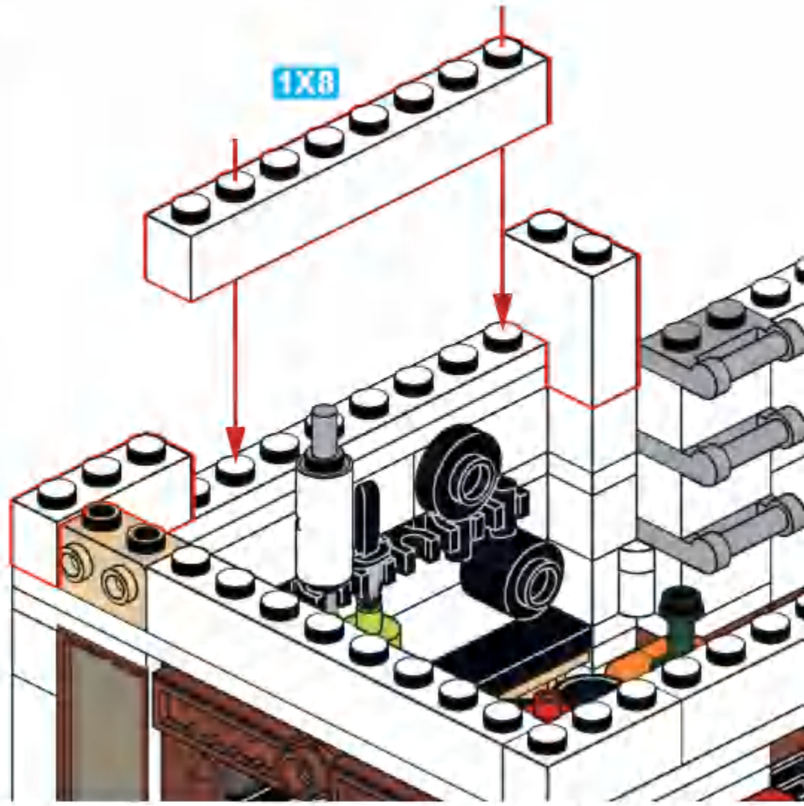

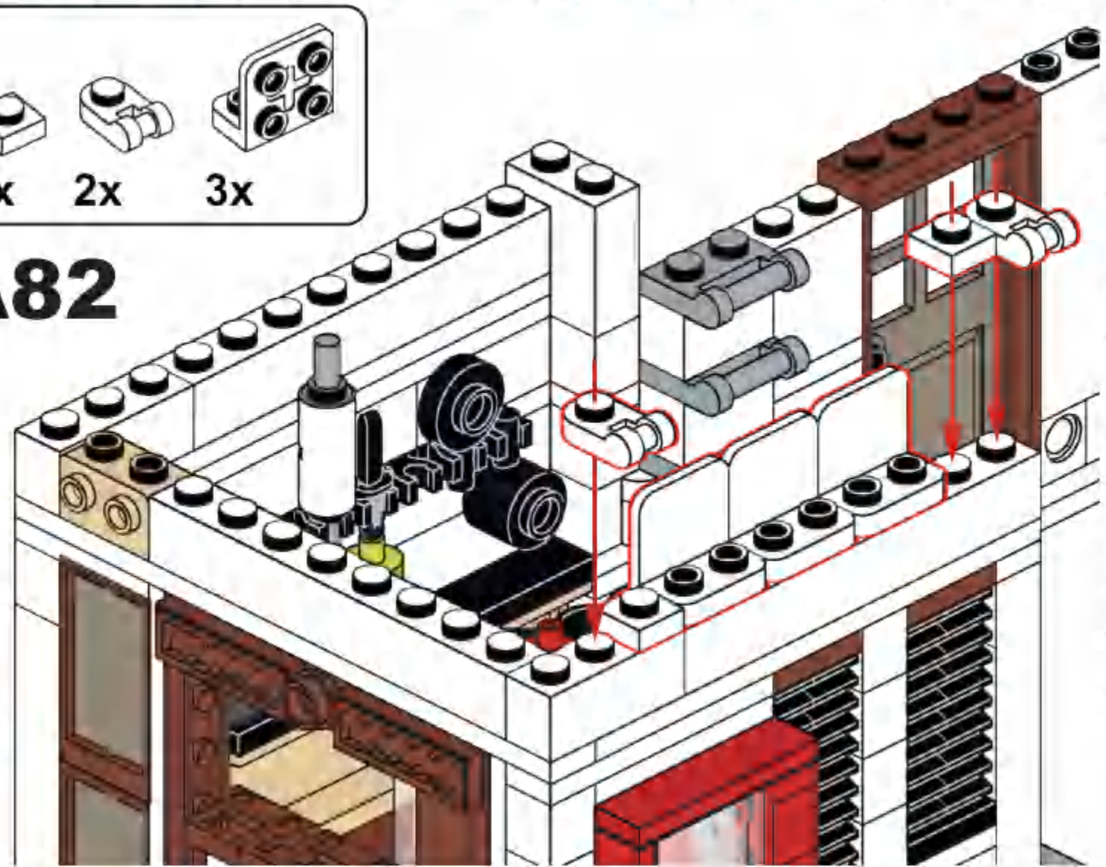

A82

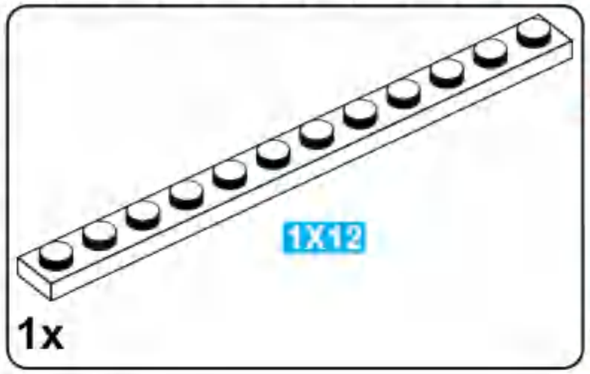

A83

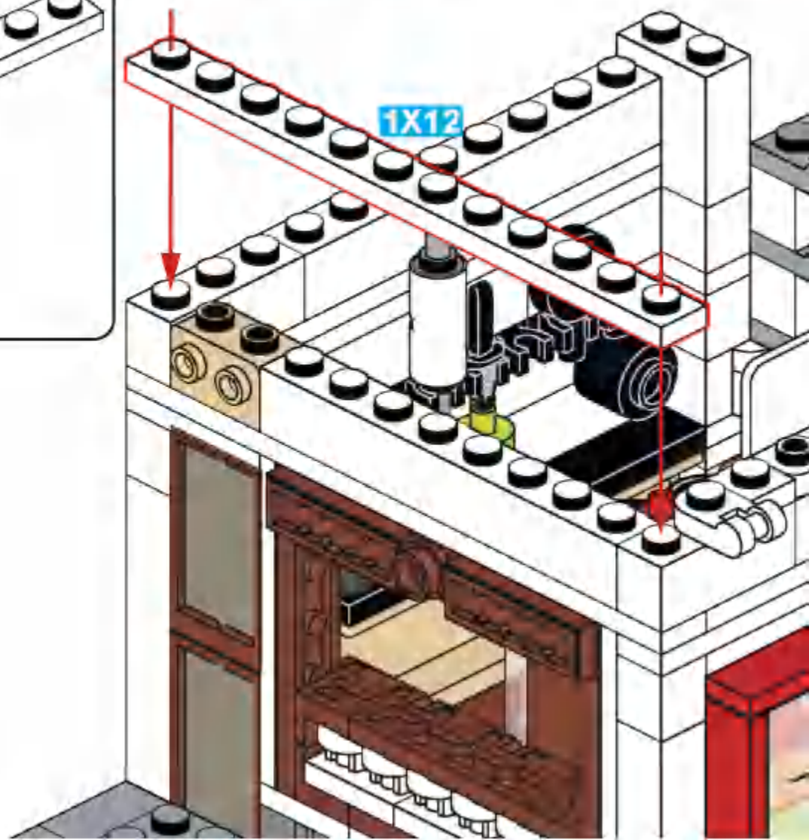

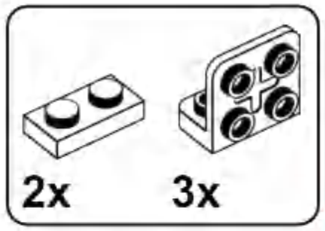

A84

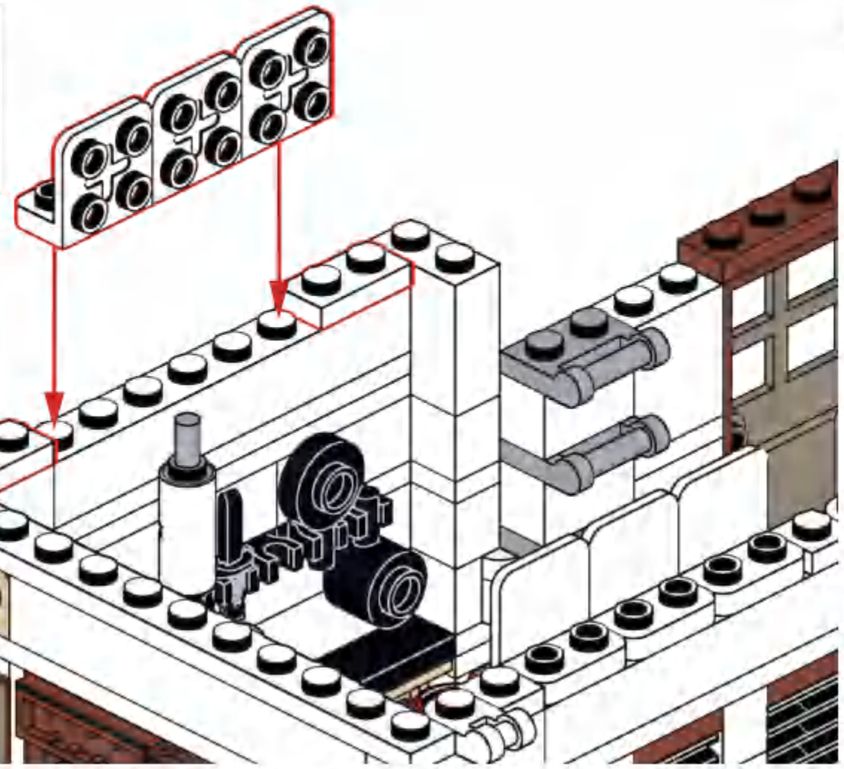

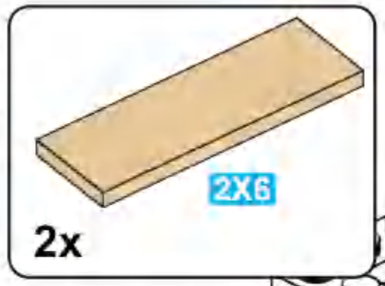

A85

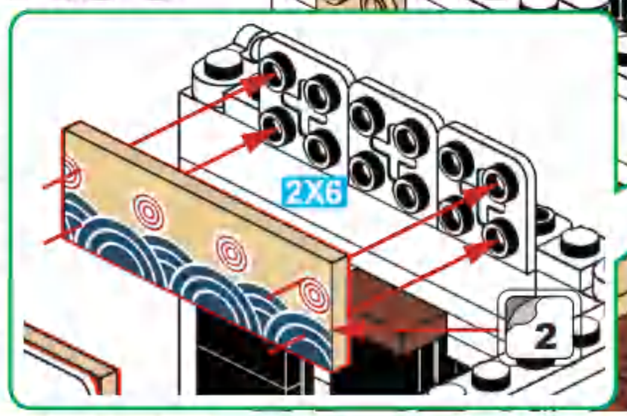

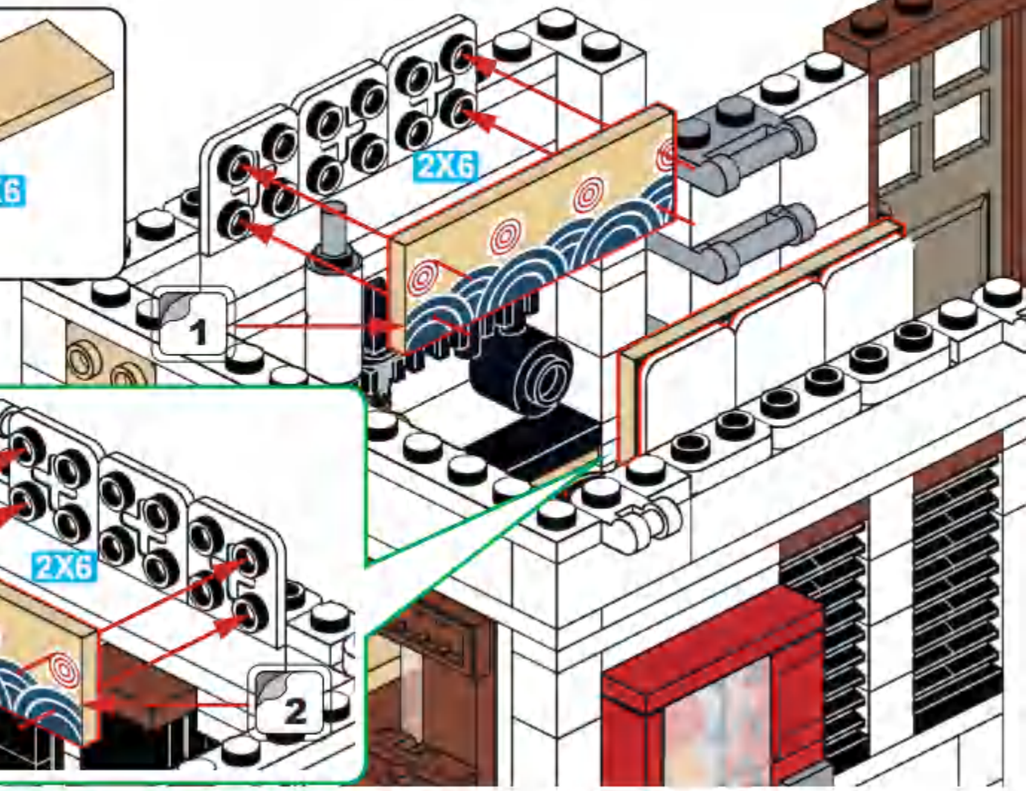

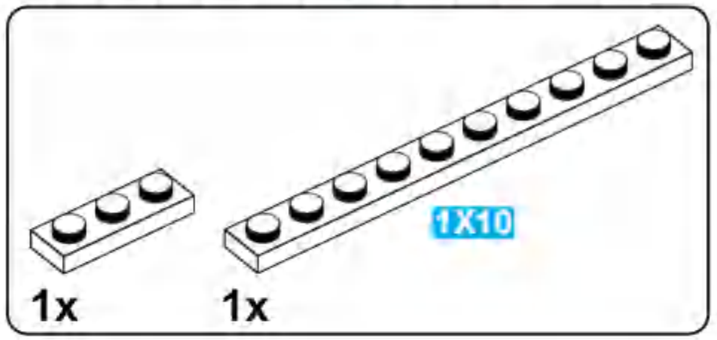

A86

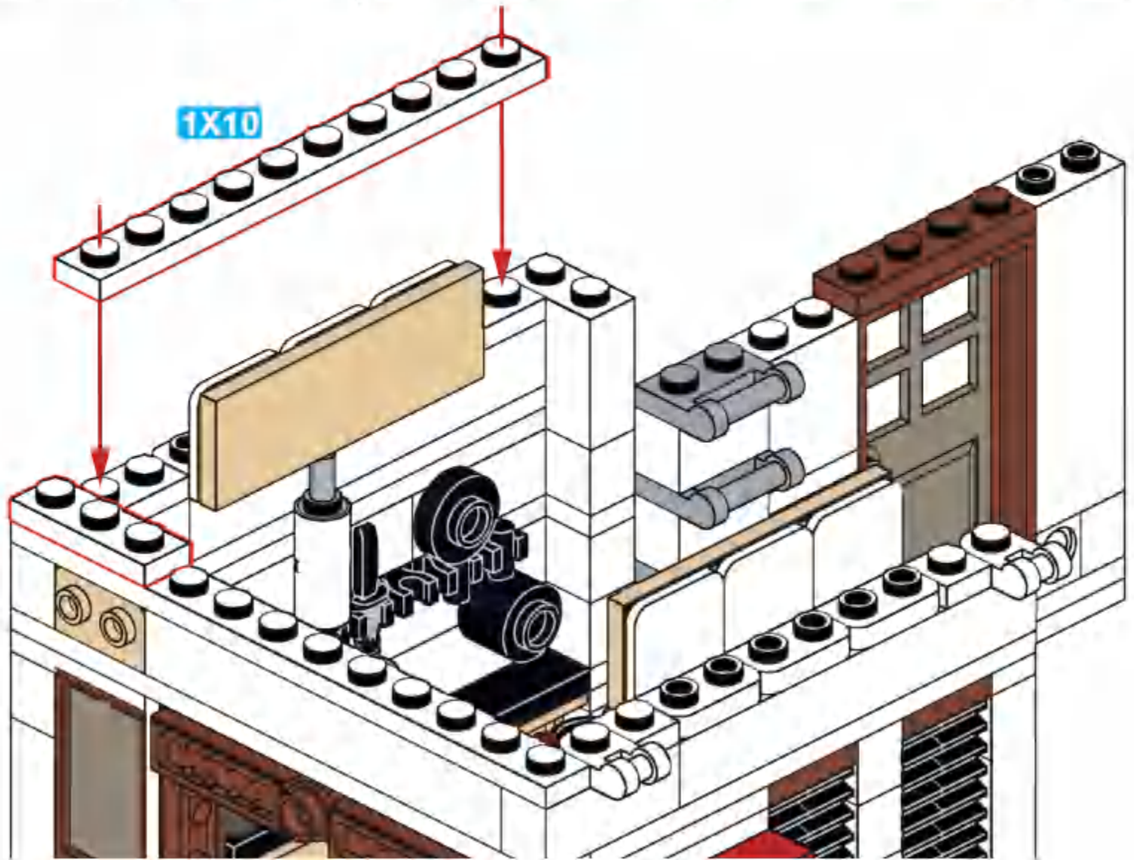

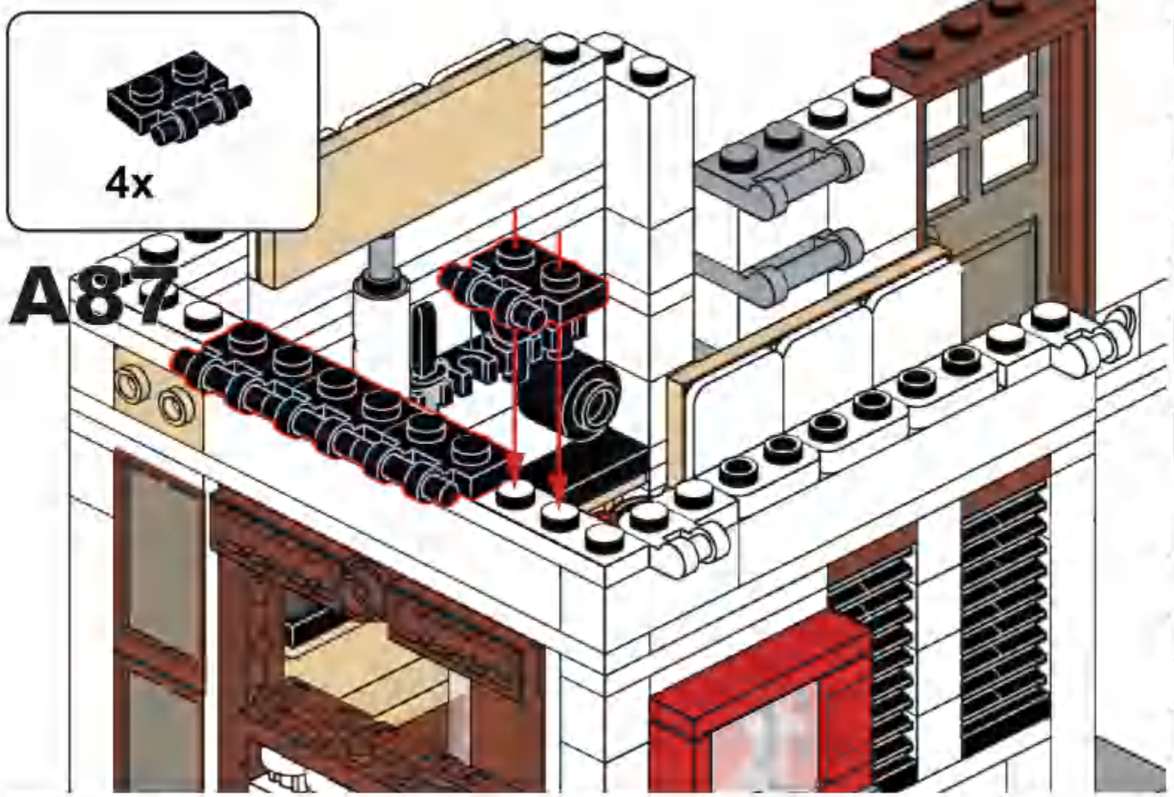

A87

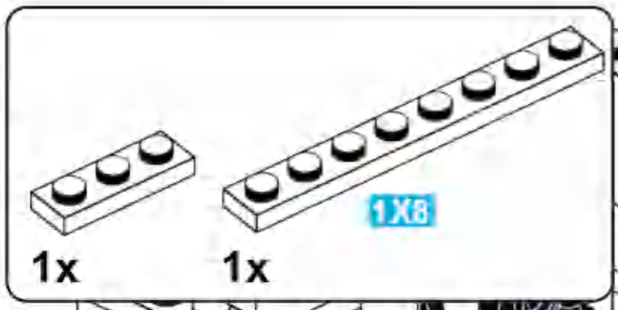

A88

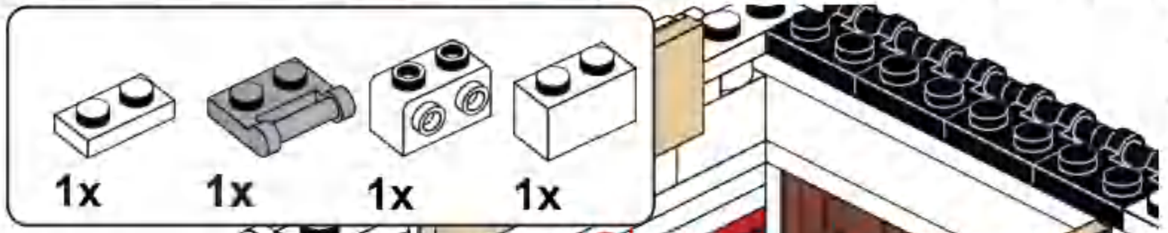

A89

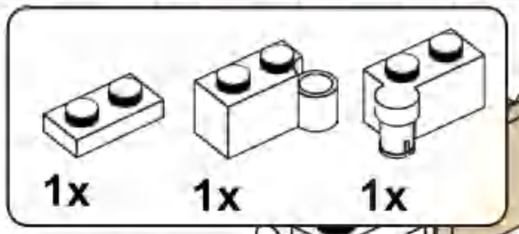

A90

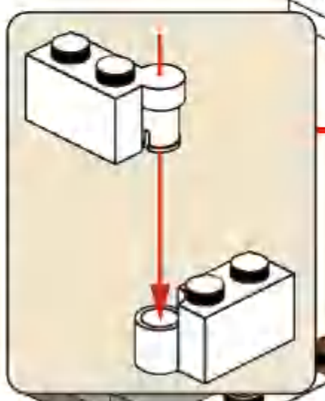

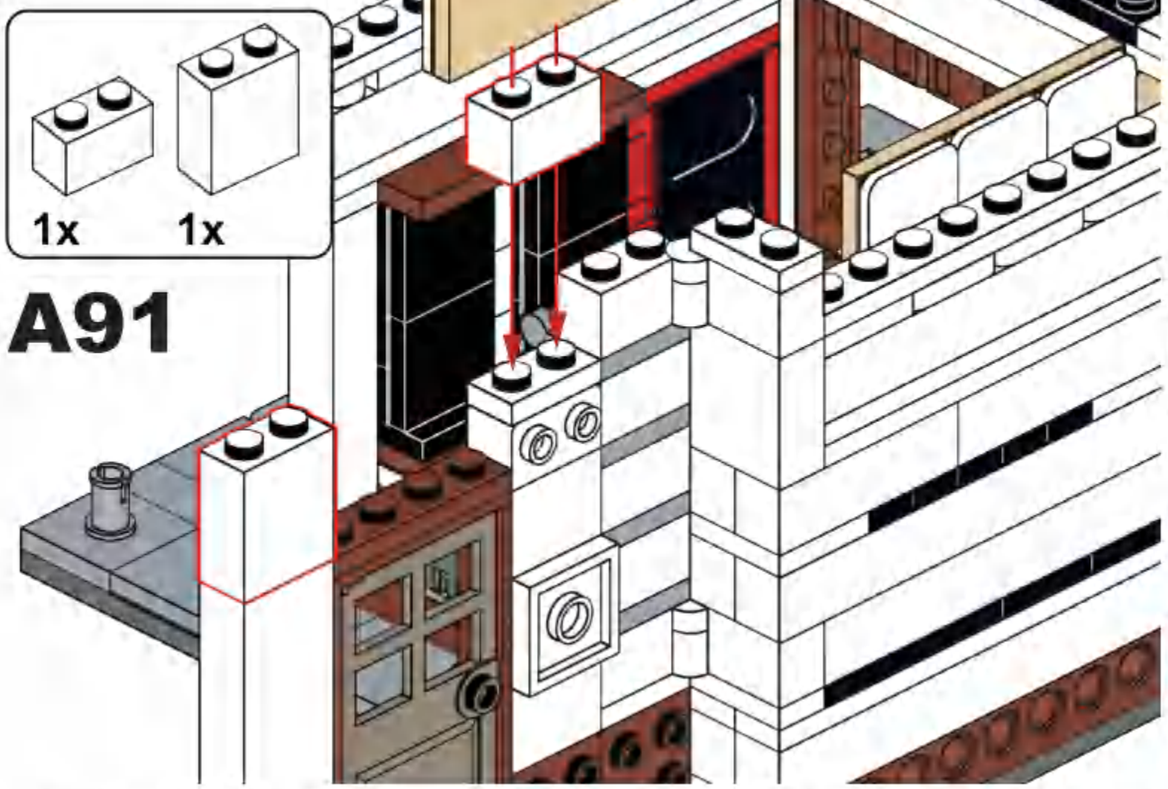

A91

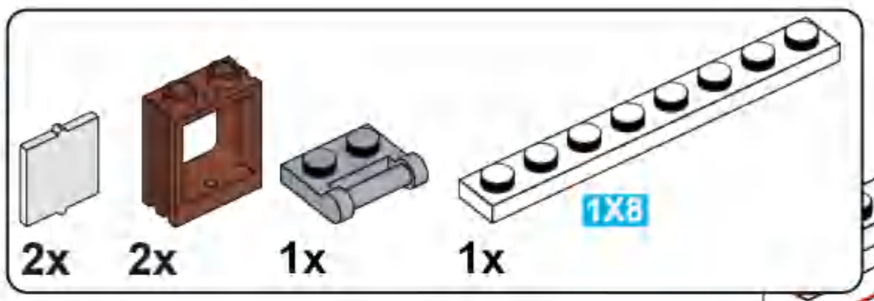

A92

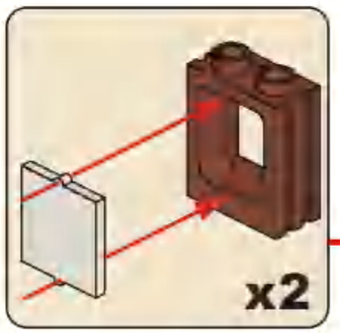

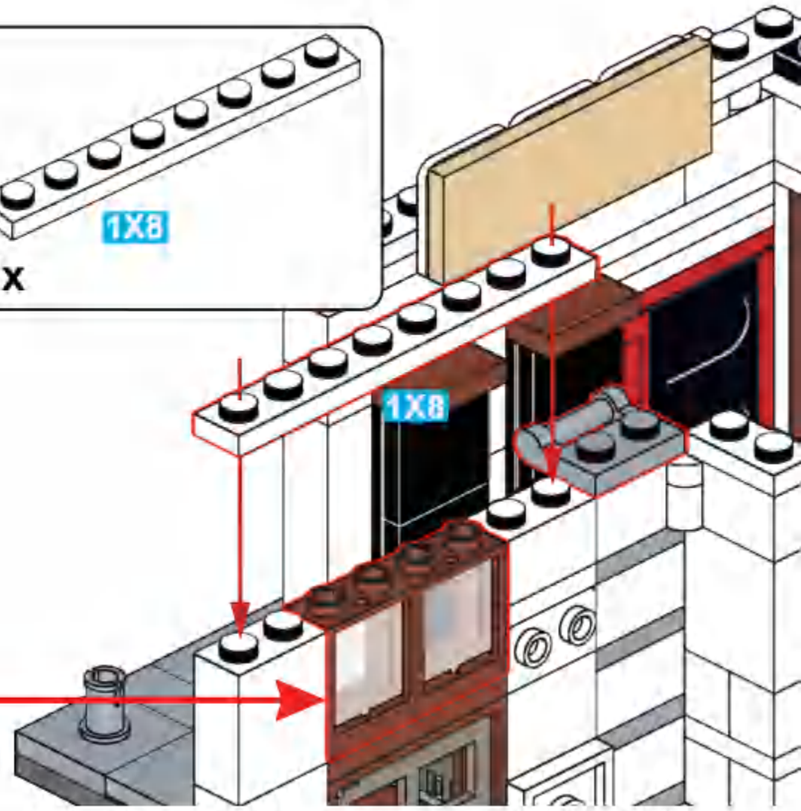

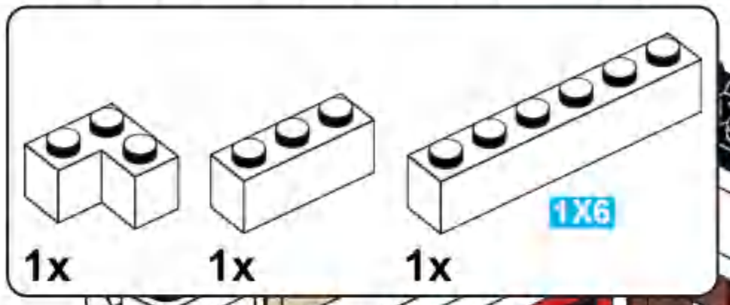

A93

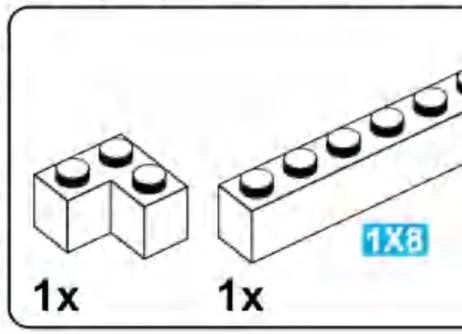

A94

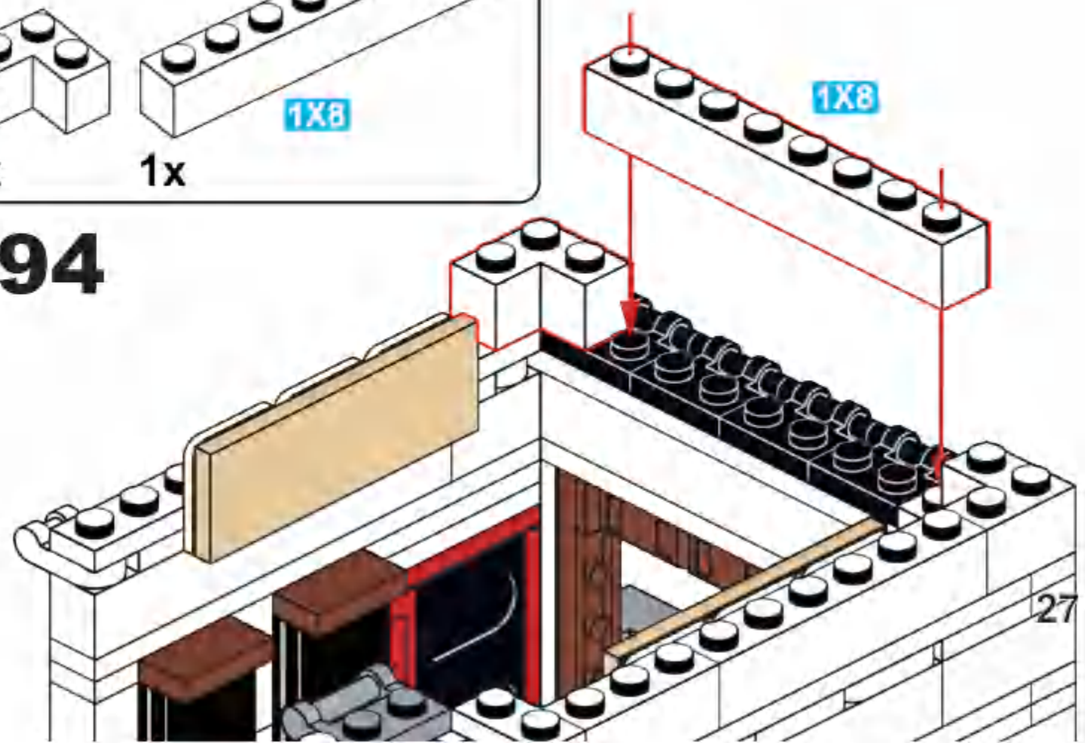

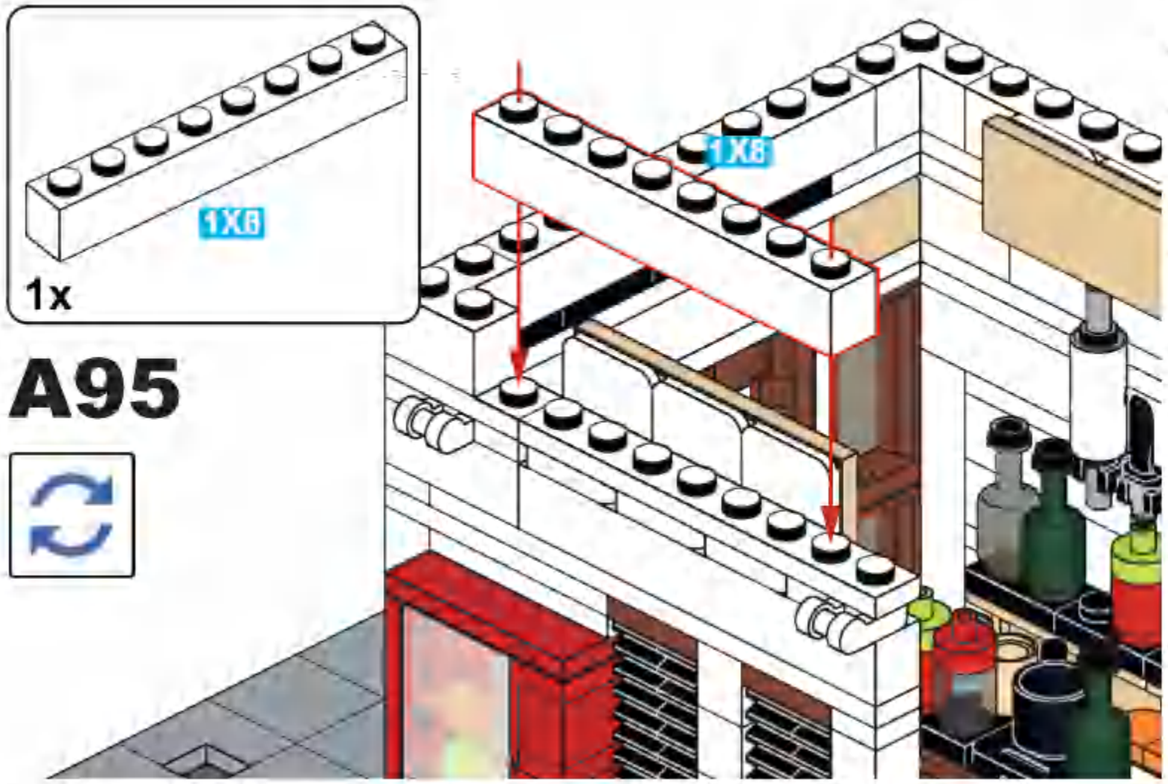

A95

A96

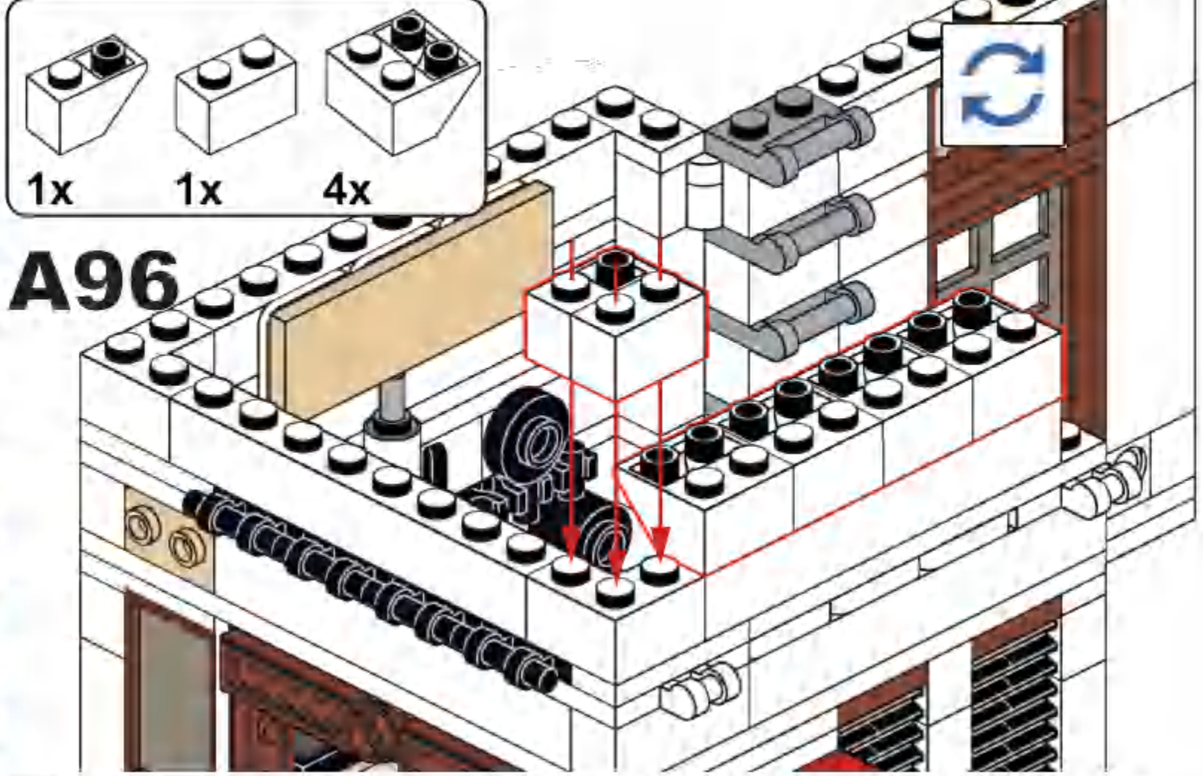

A97

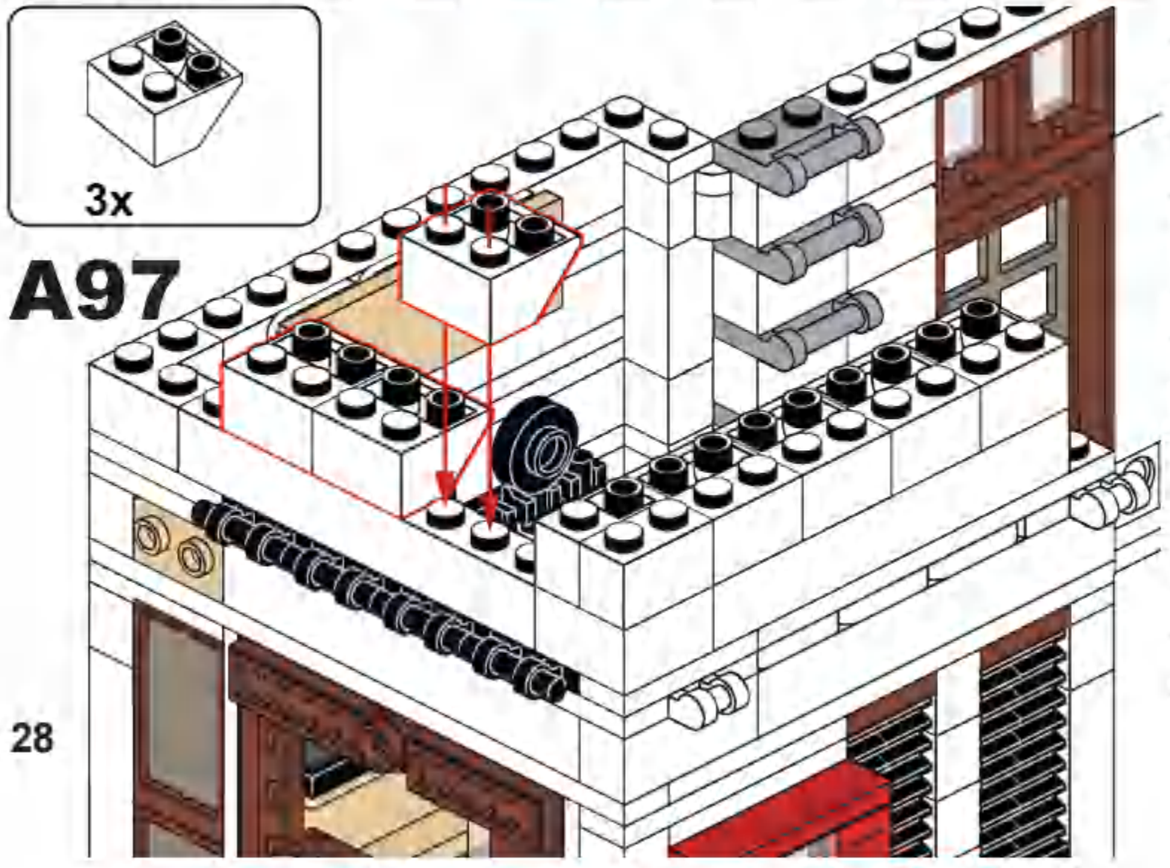

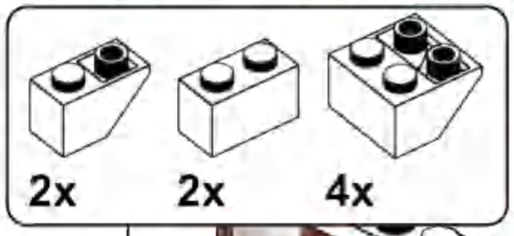

A98

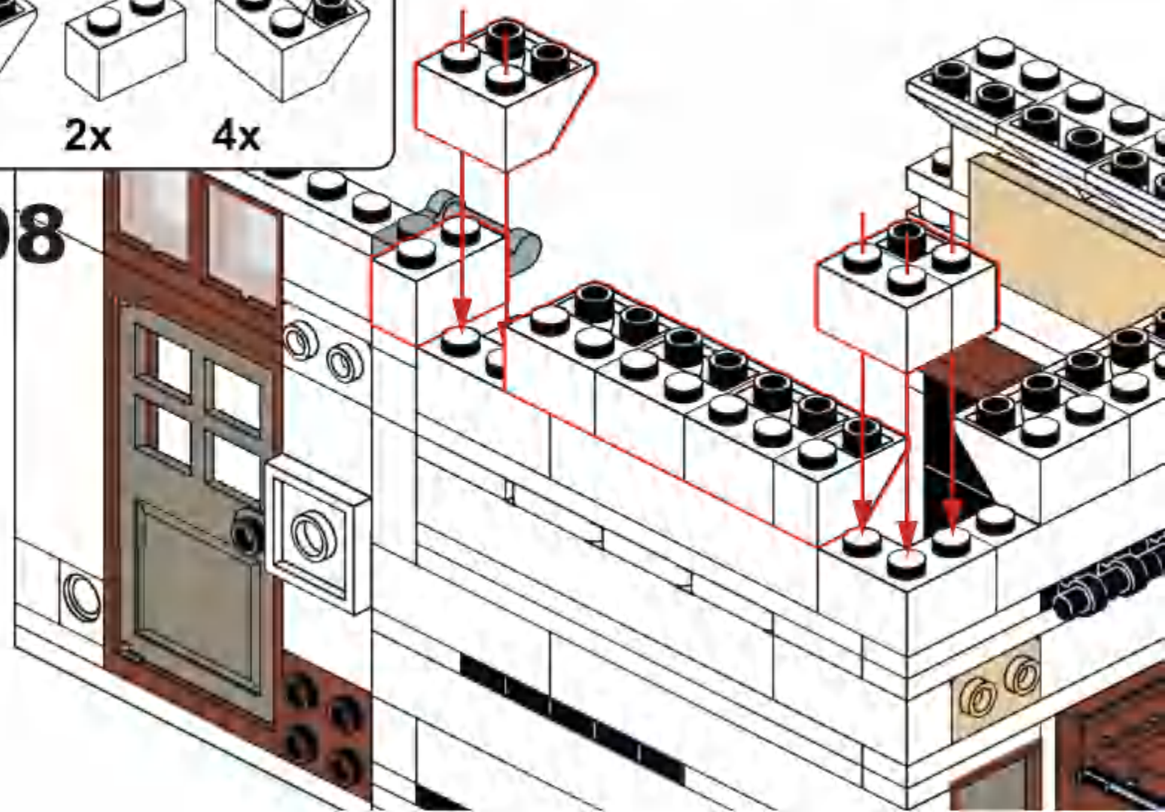

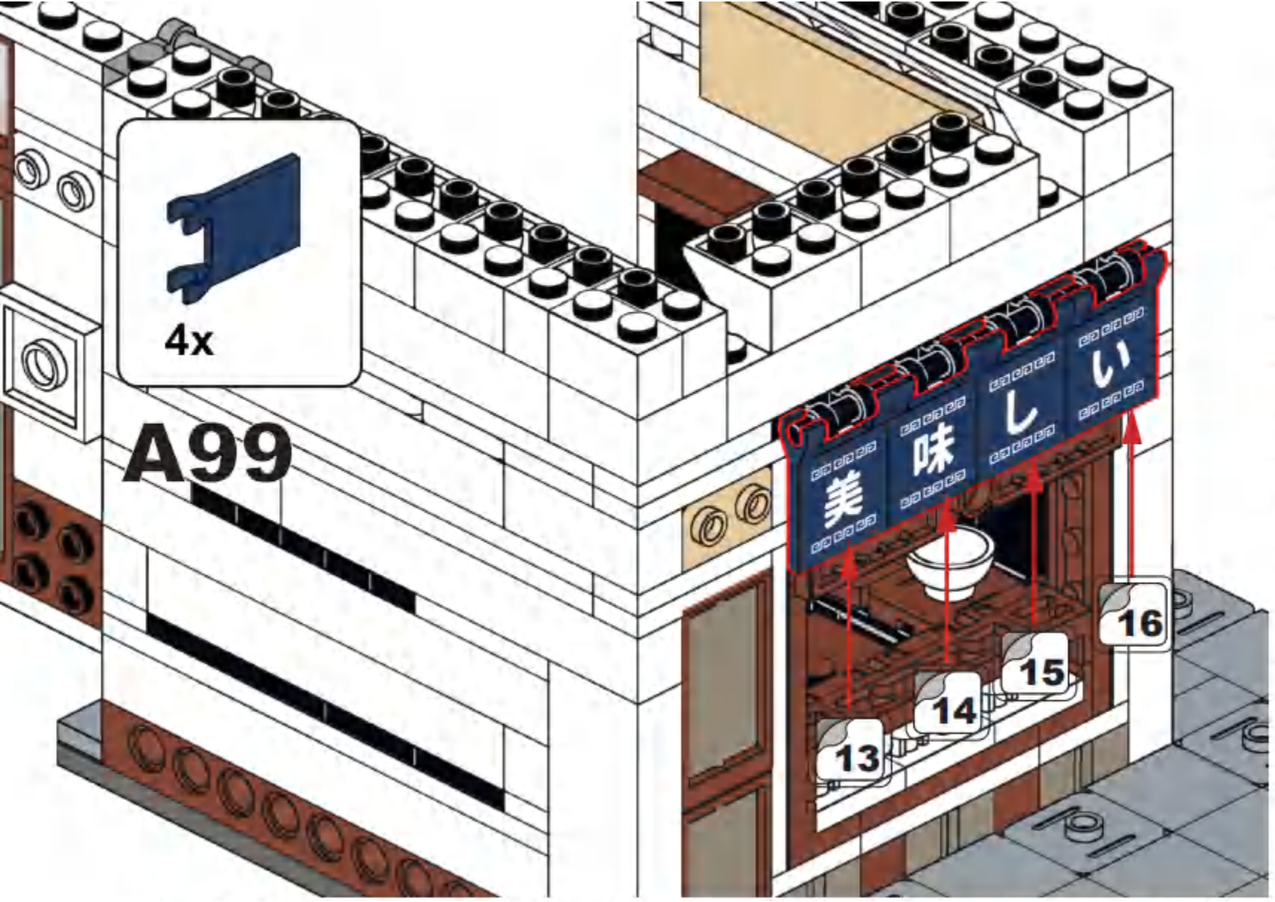

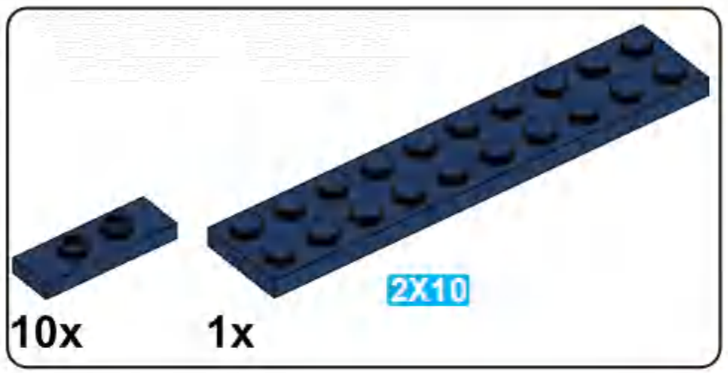

A100

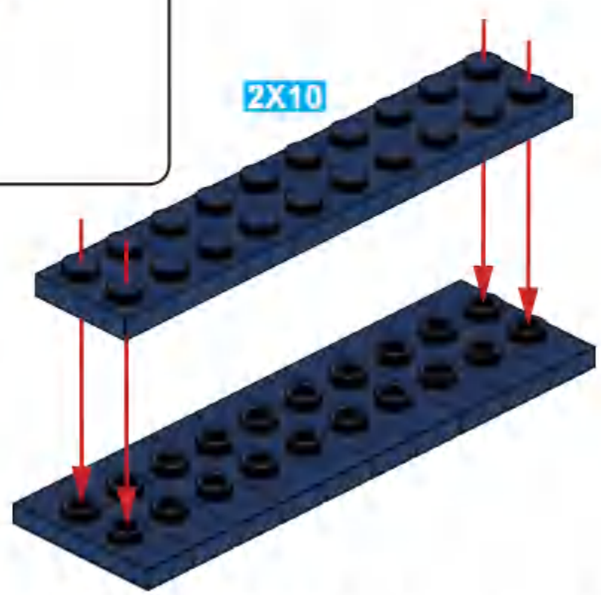

A101

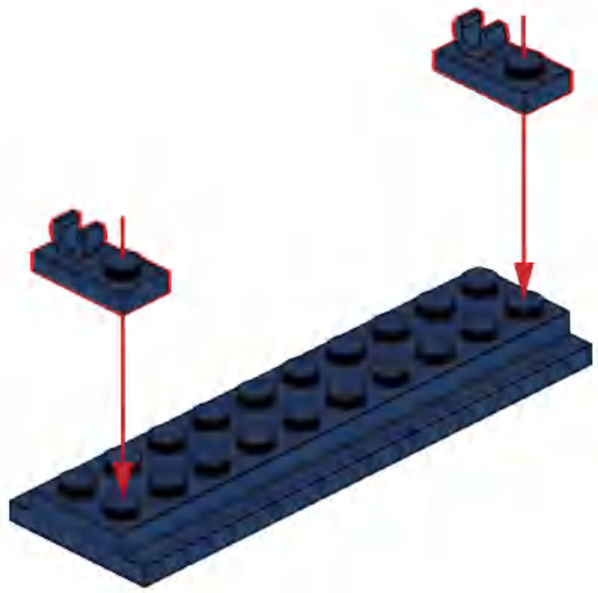

A102

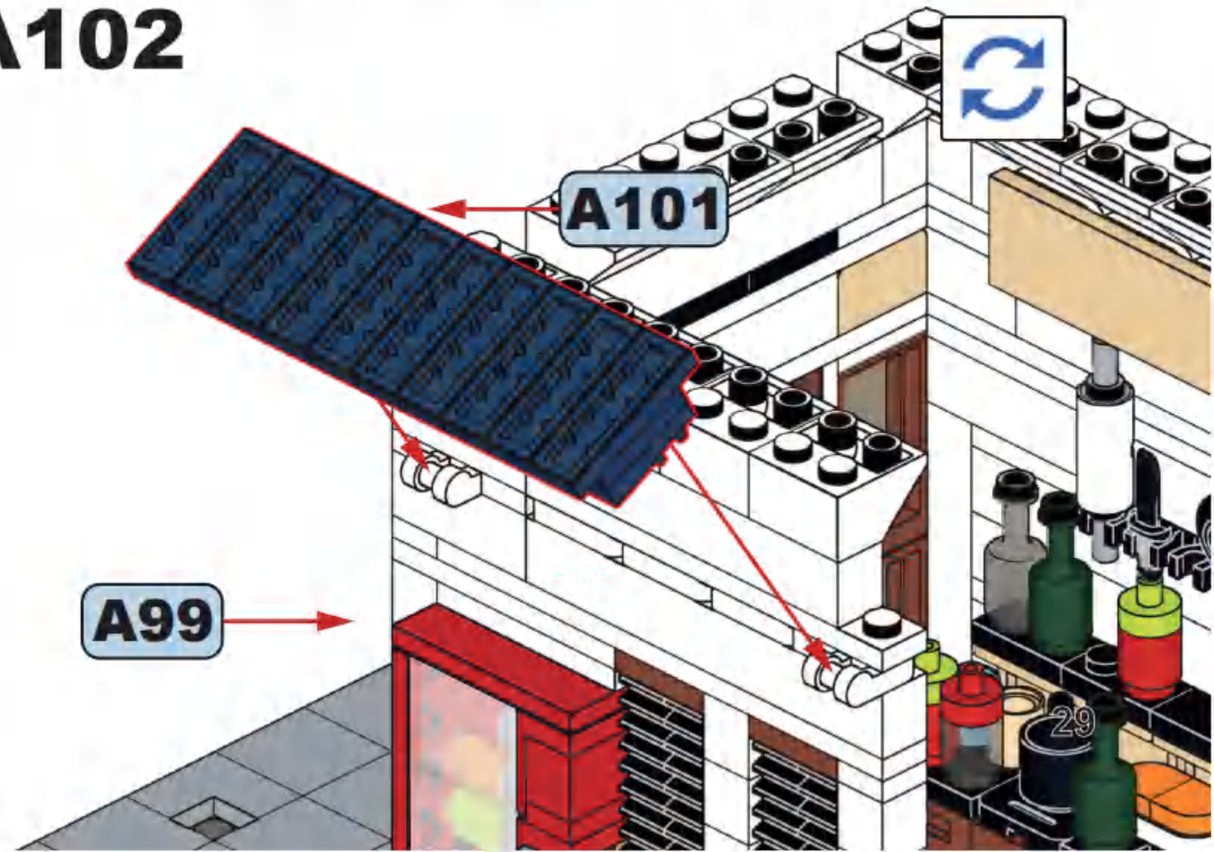

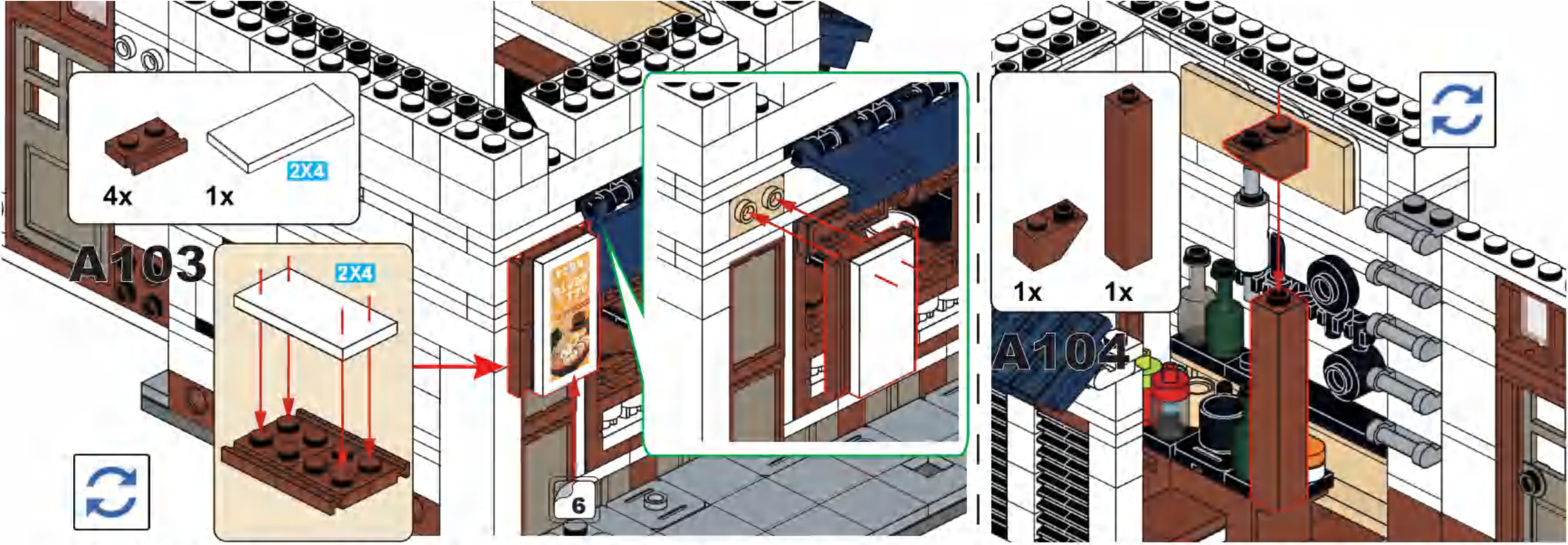

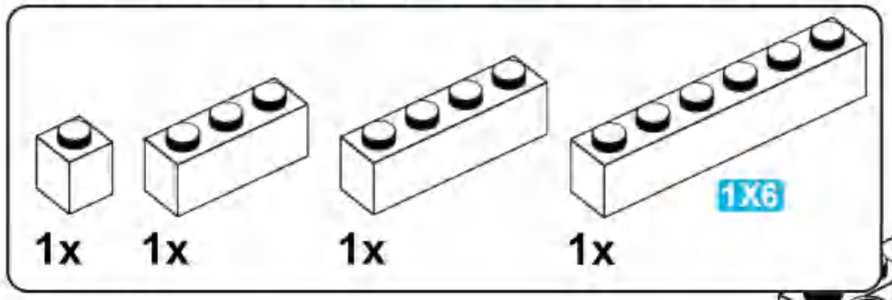

A105

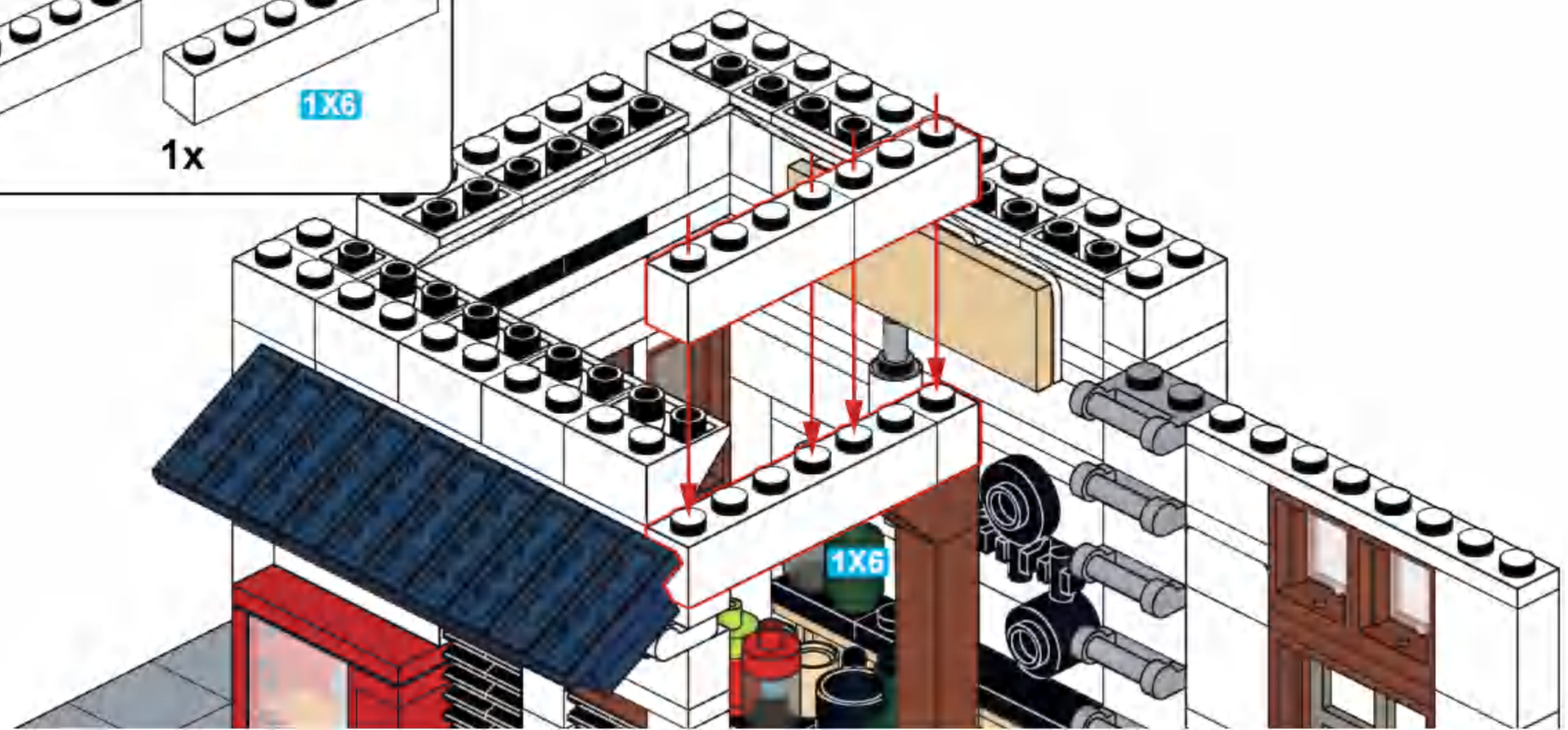

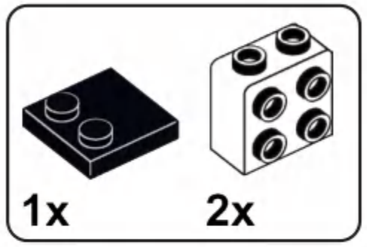

A106

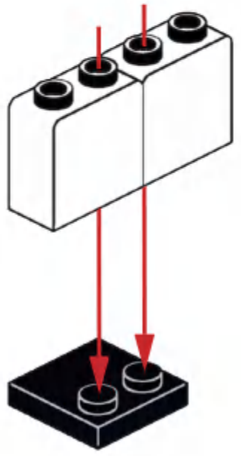

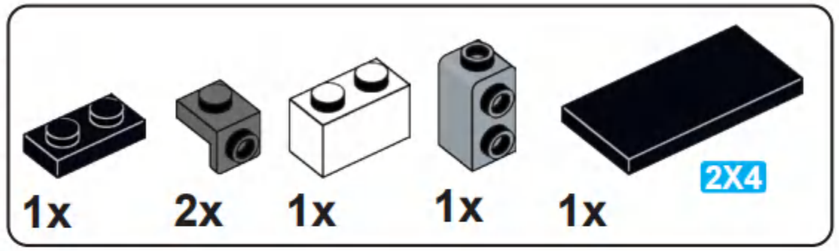

A107

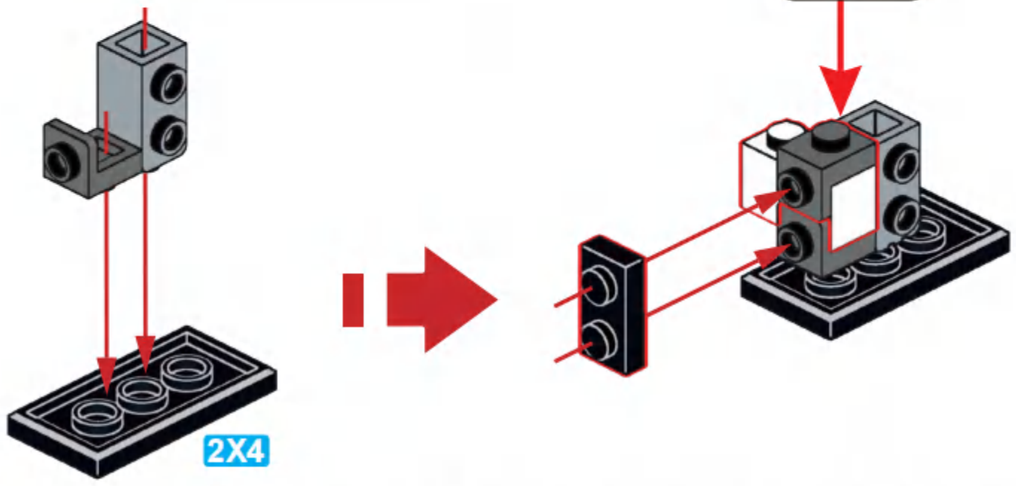

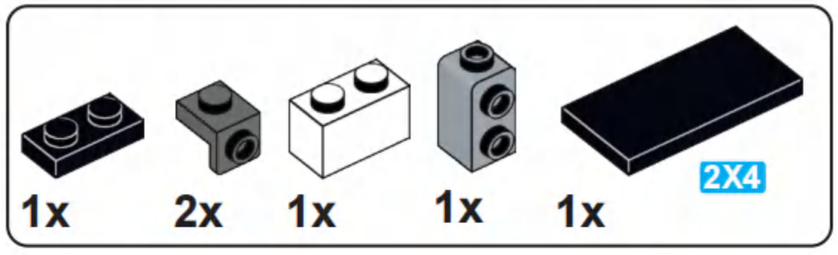

A108

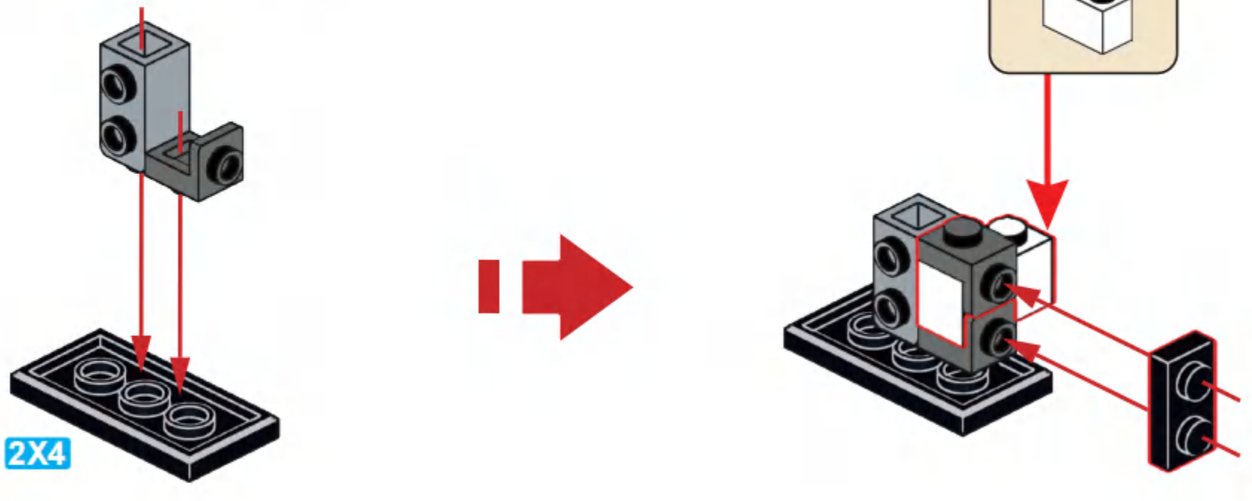

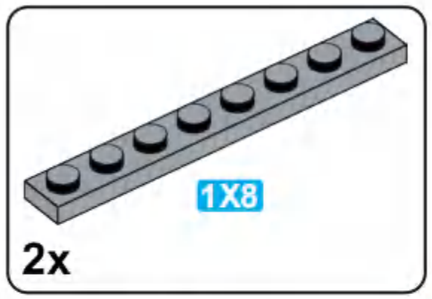

A109

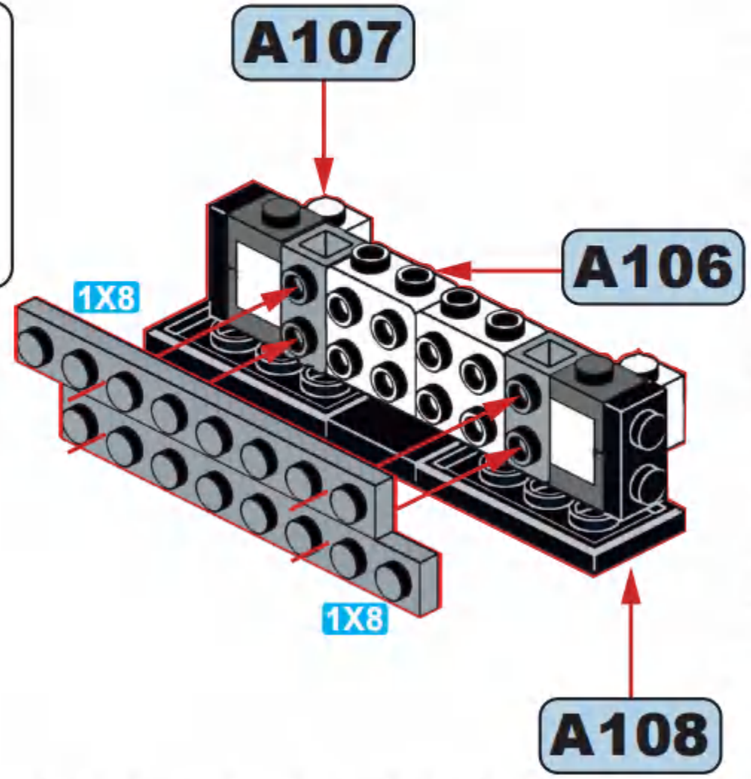

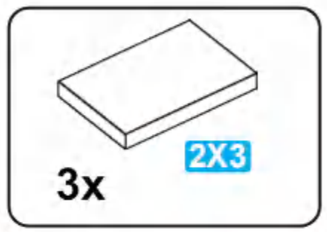

A110

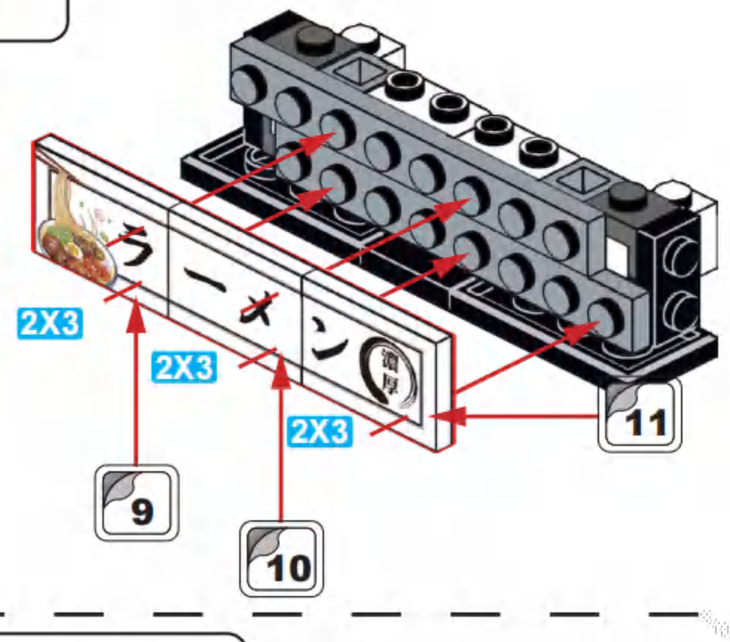

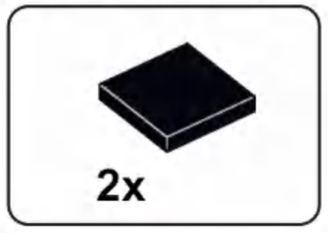

A111

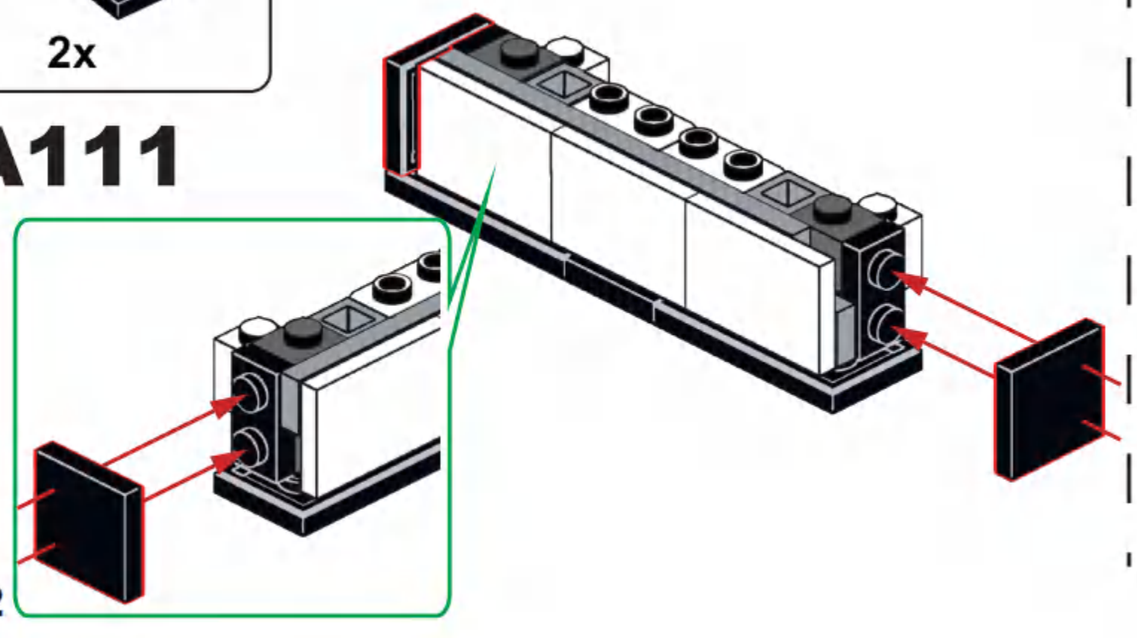

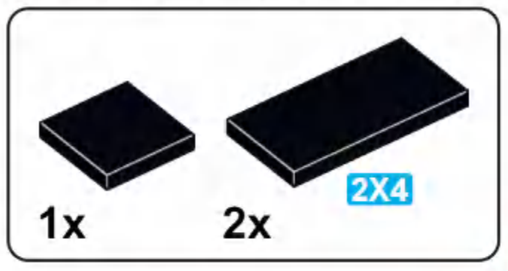

A112

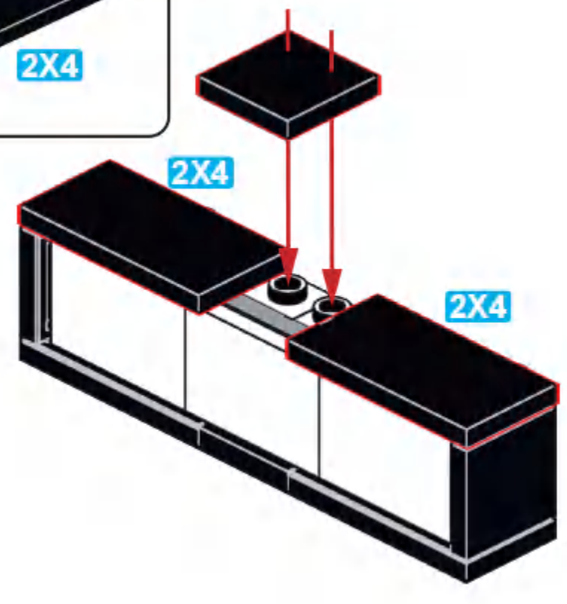

A113

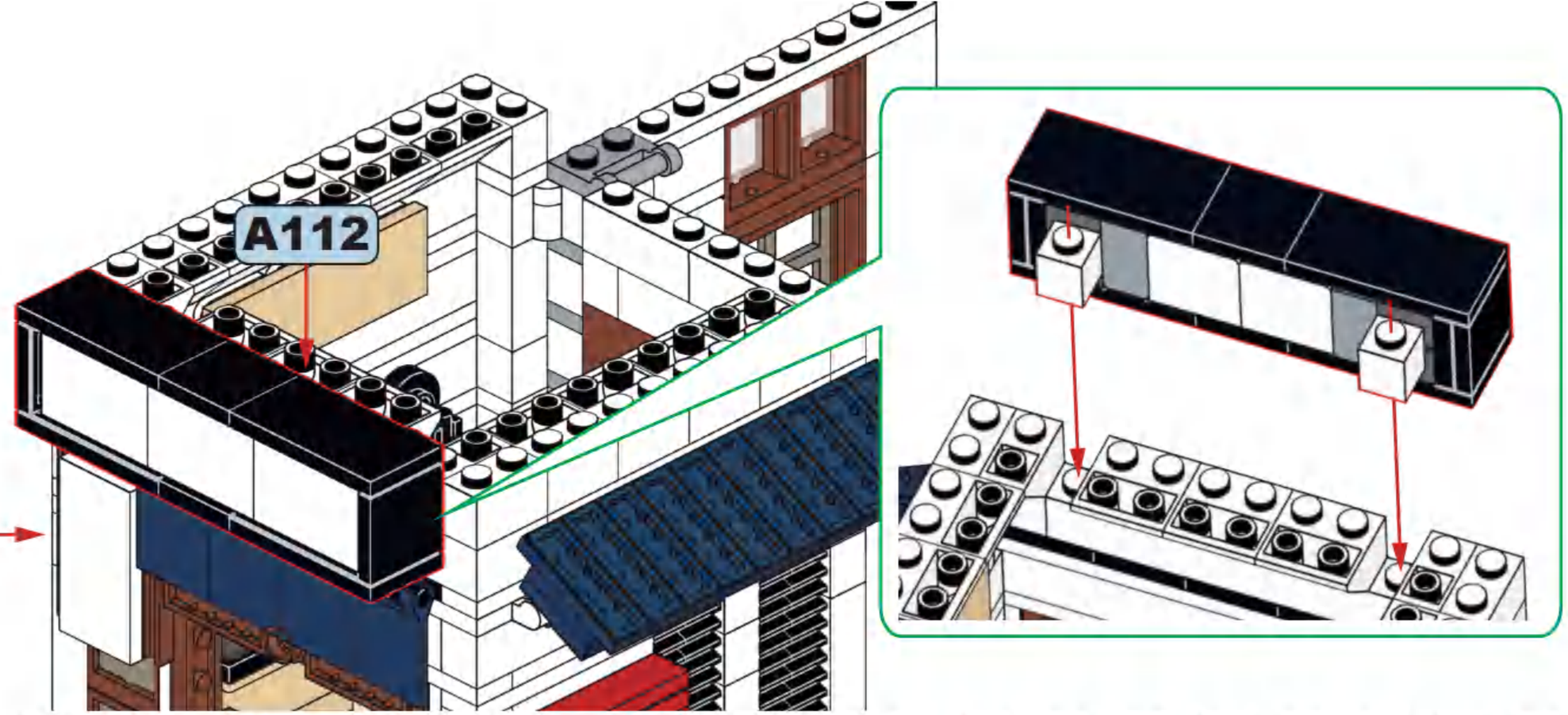

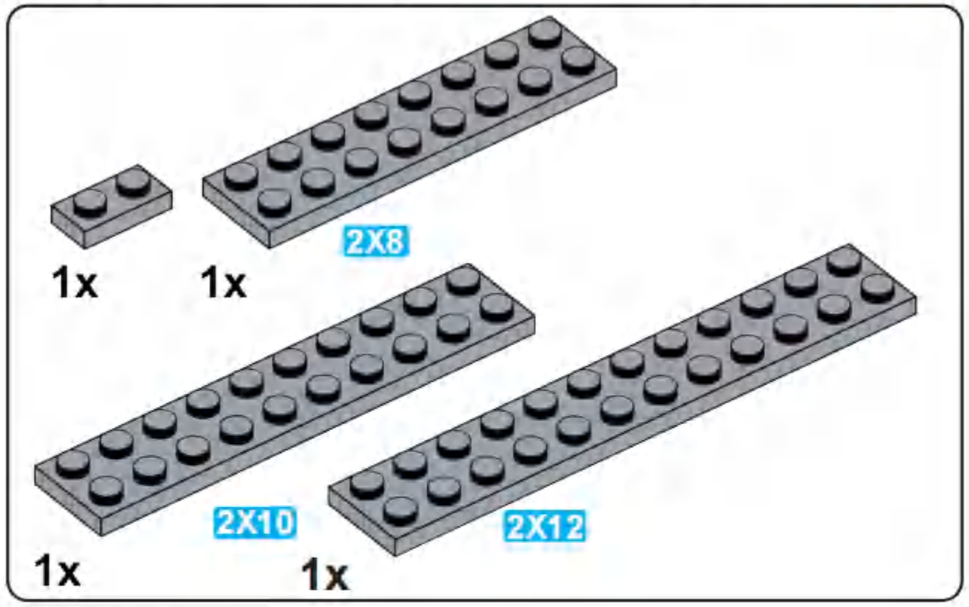

A114

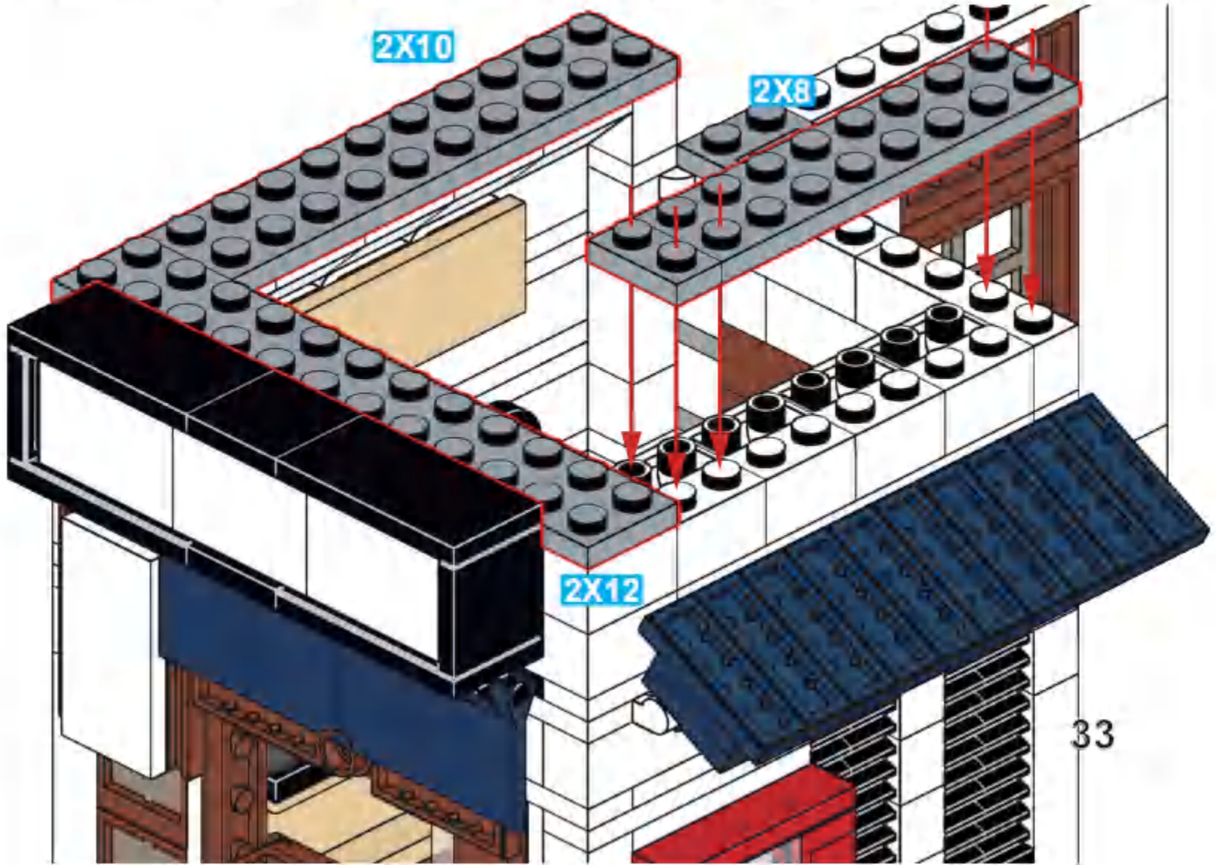

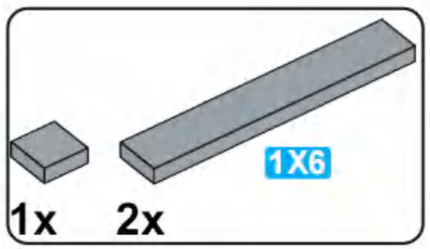
1X6
1x
2x

A115

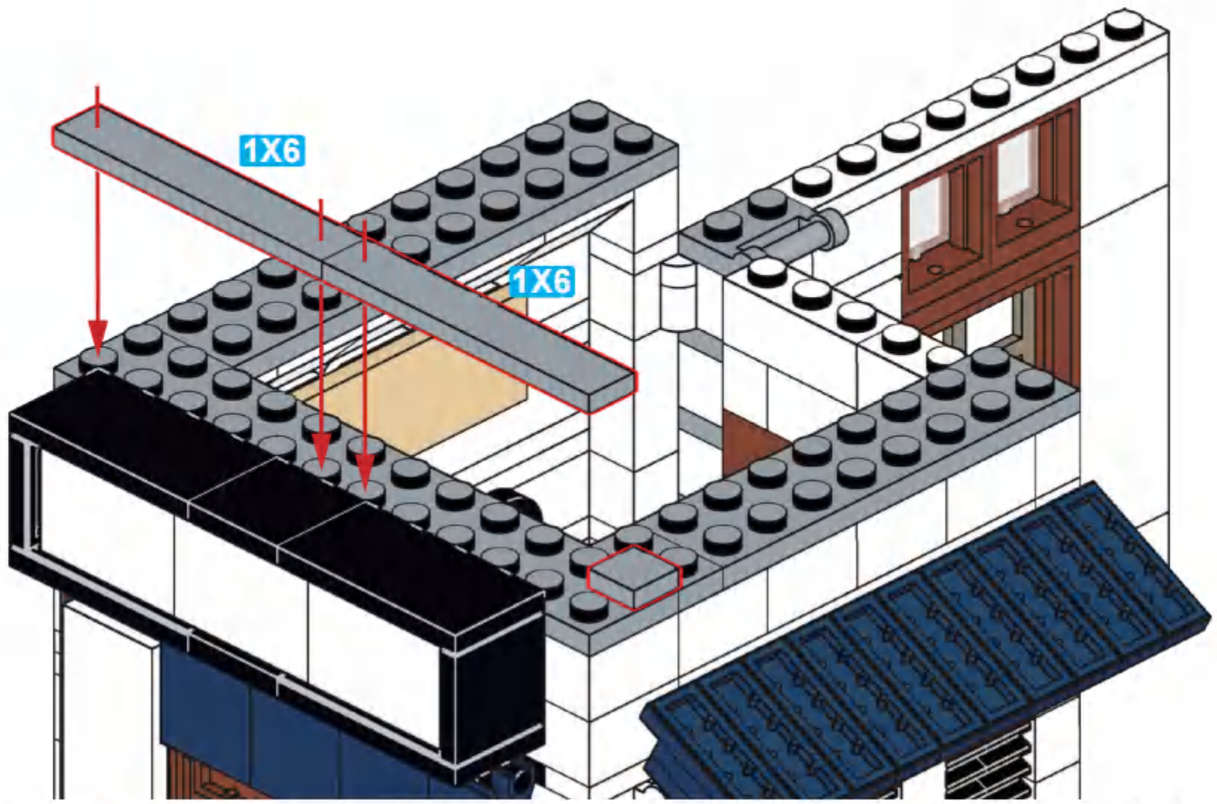
1X6
1X6

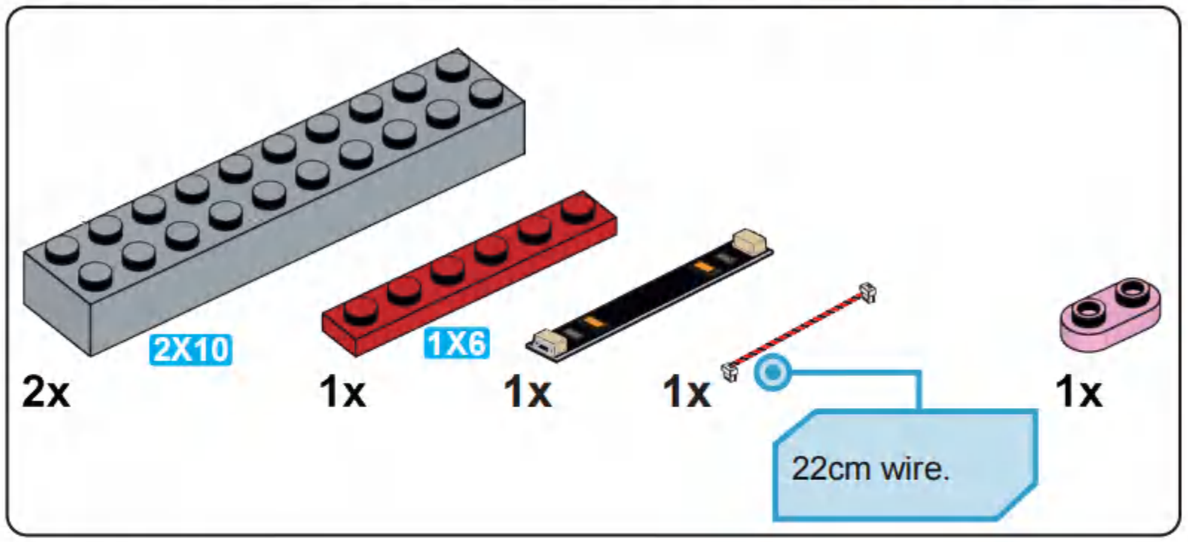
2X10
1X6
2x
1x
1x
1x
22cm wire.
1x

A116

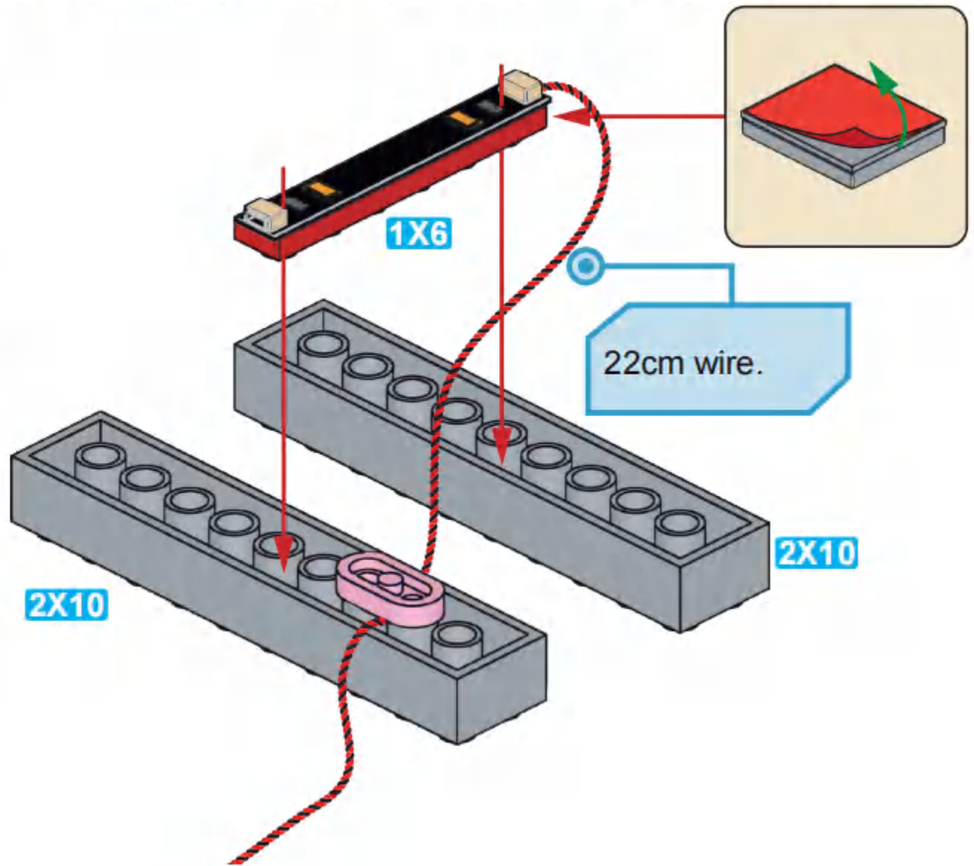
1X6
22cm wire.
2X10
2X10

A117

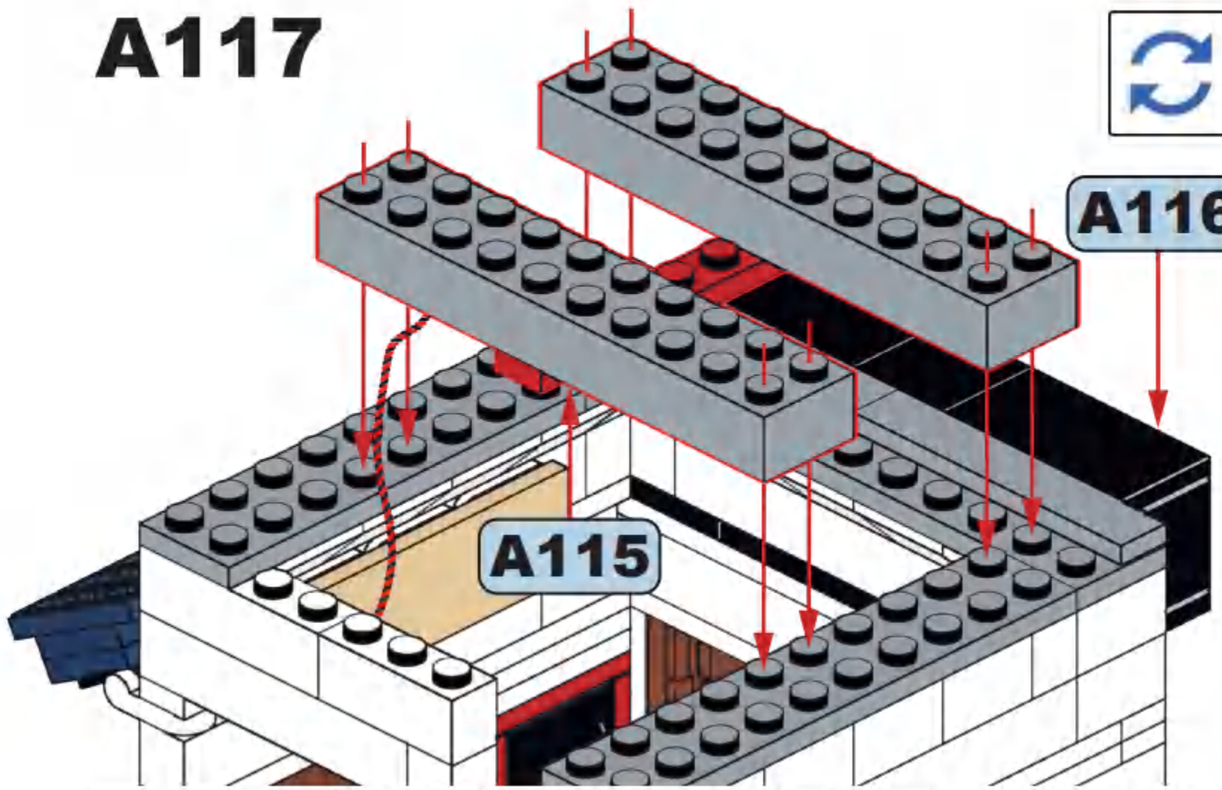

A118

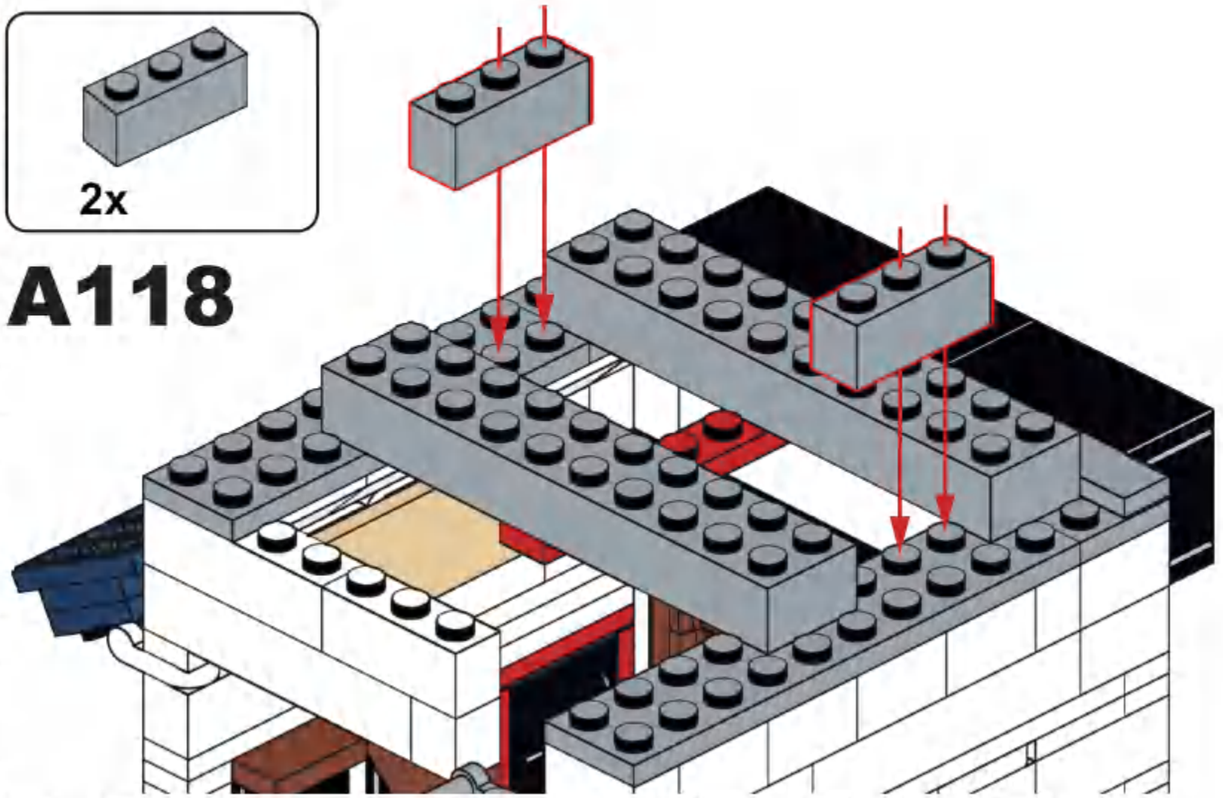

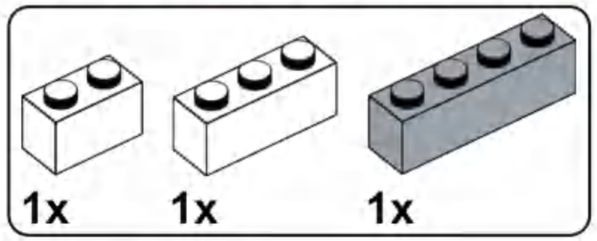

A119

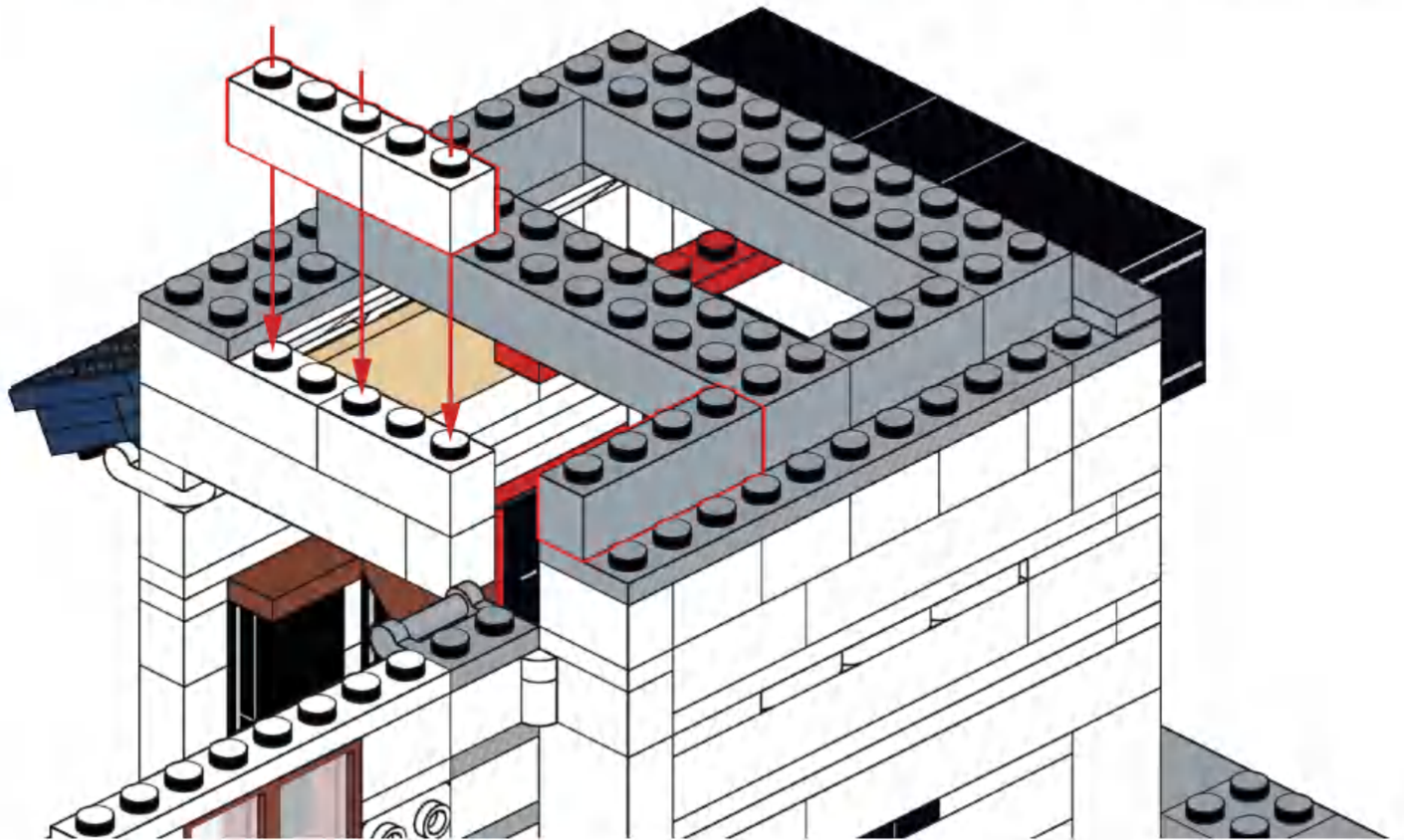

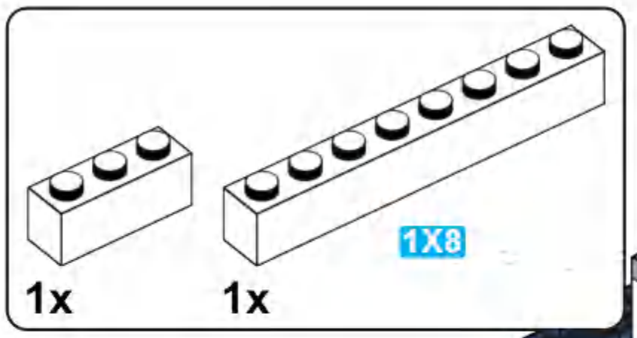

A120

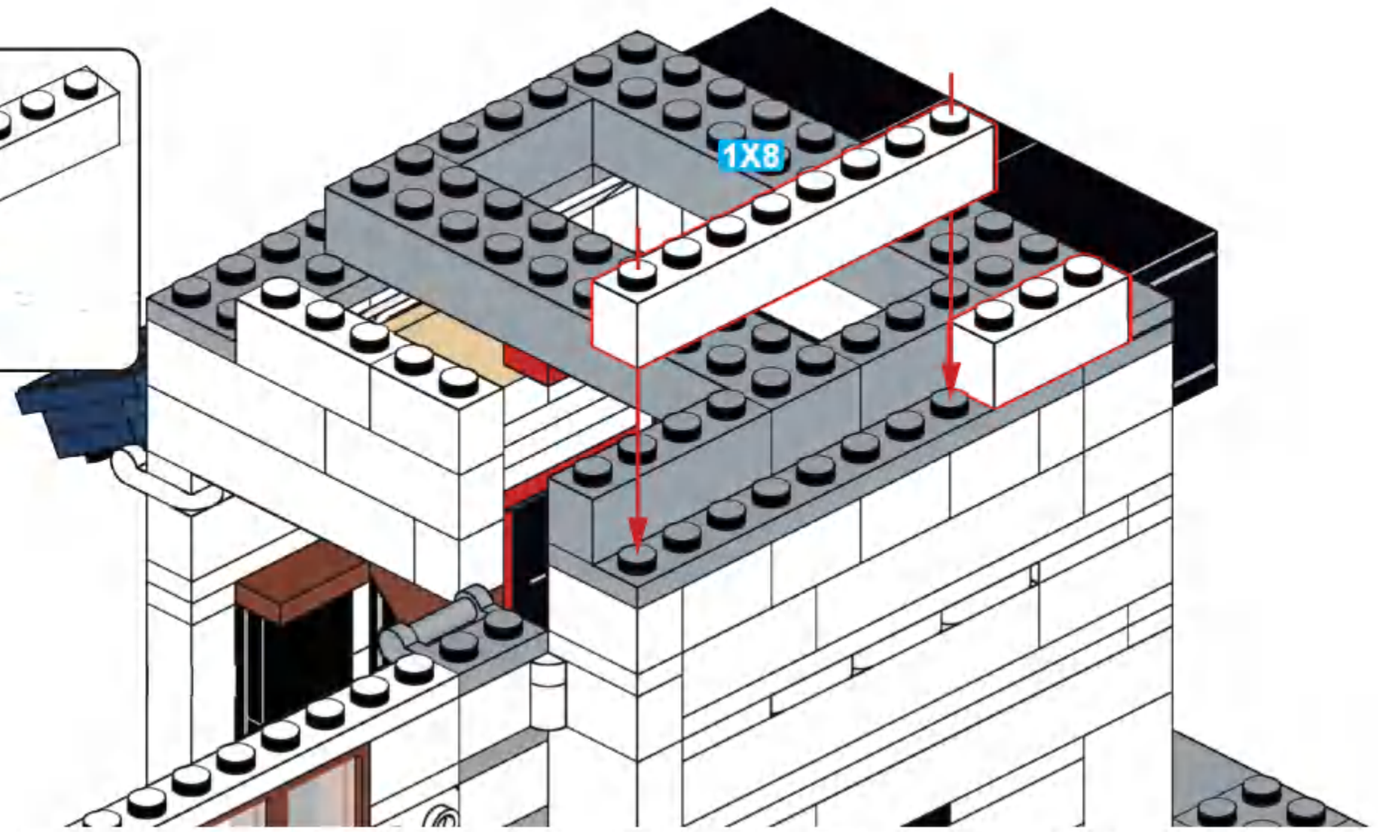

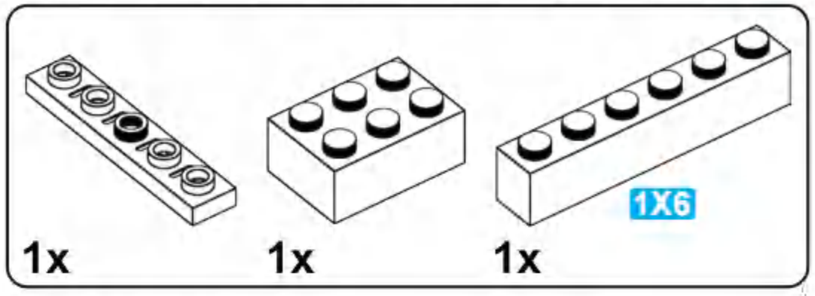

A121

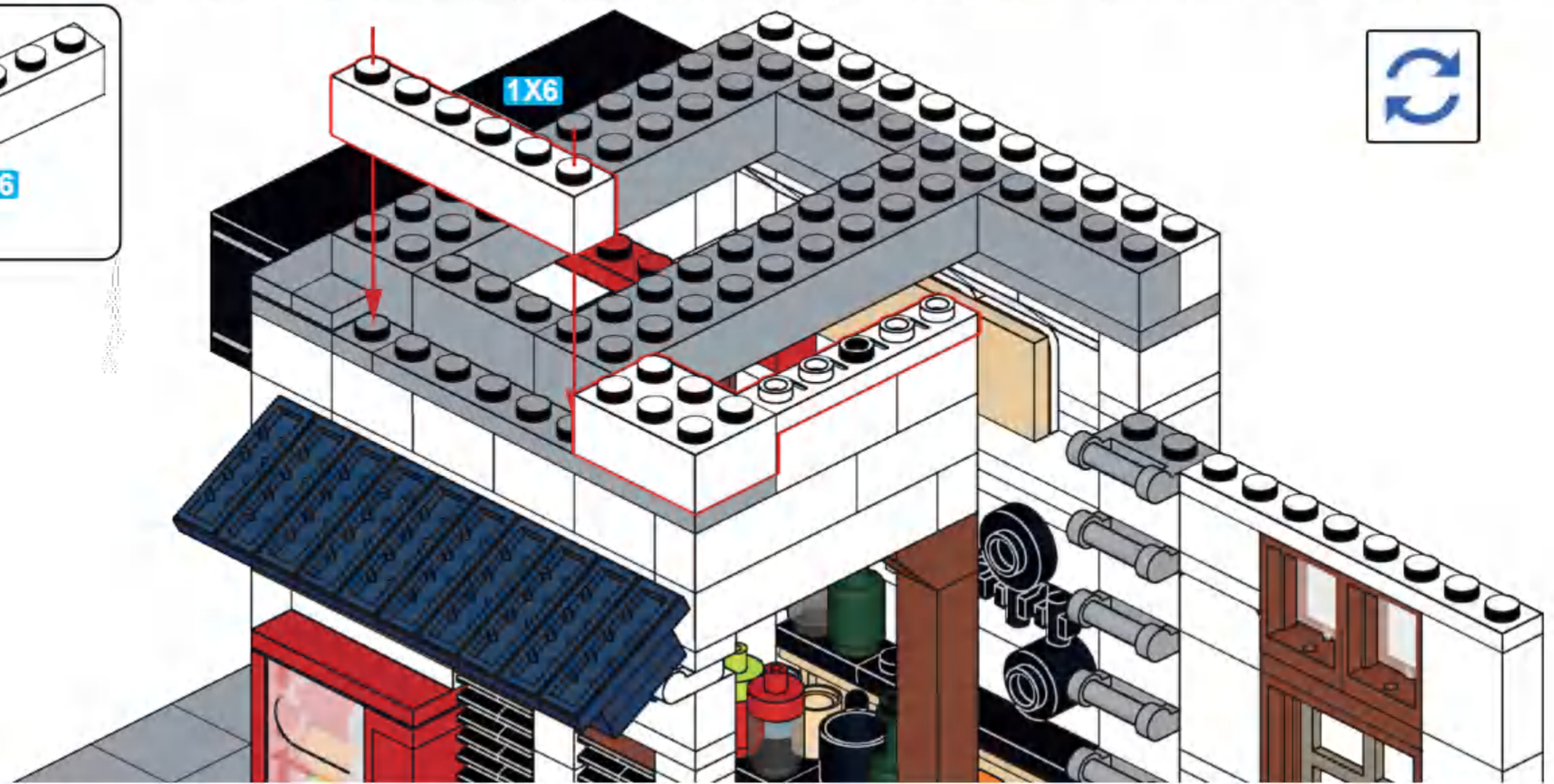

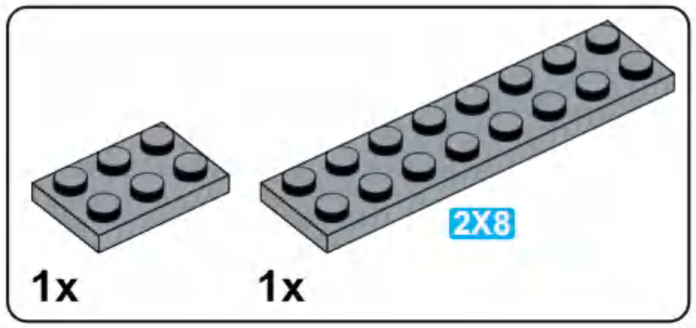

A122

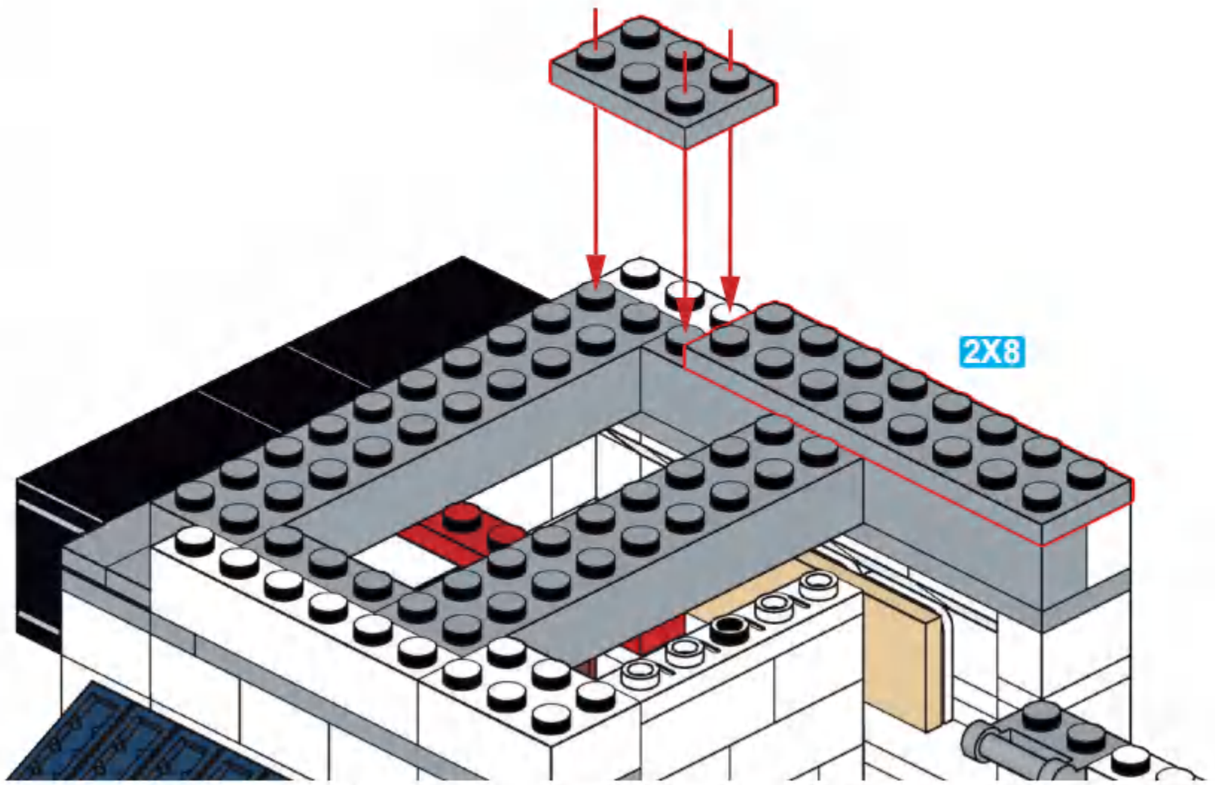

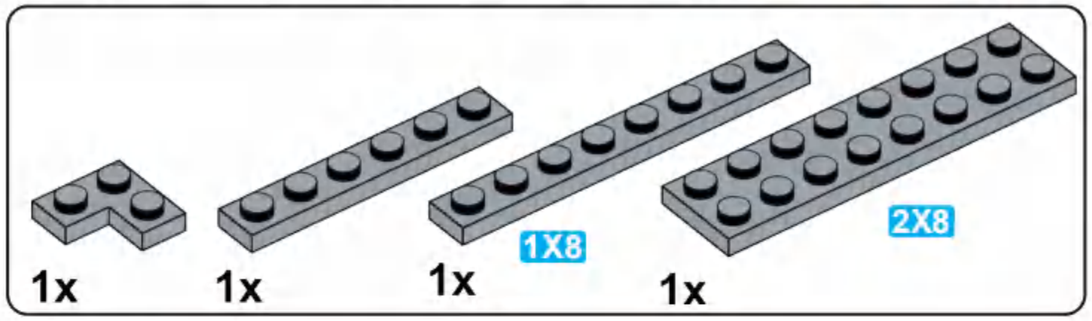

A123

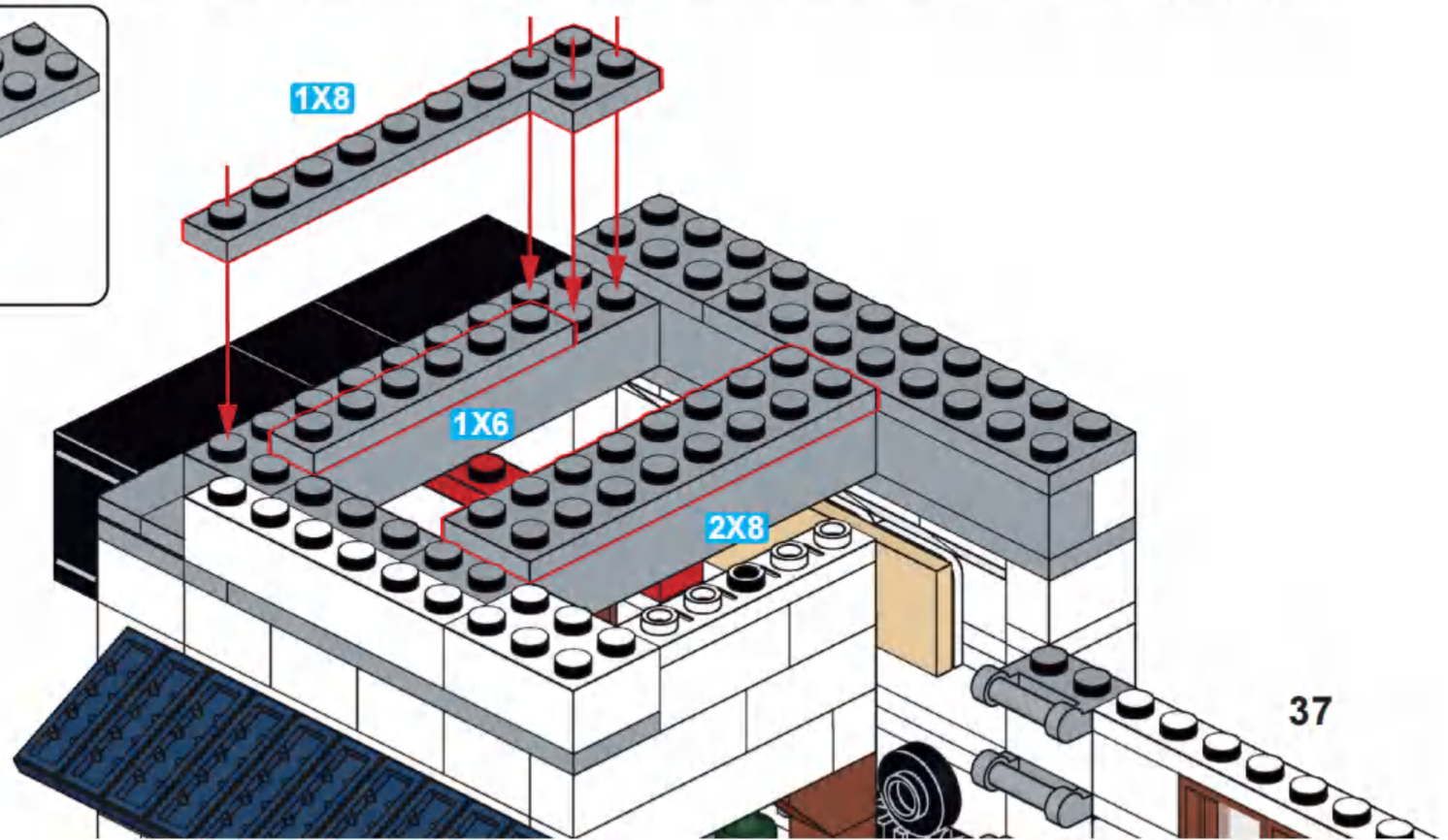

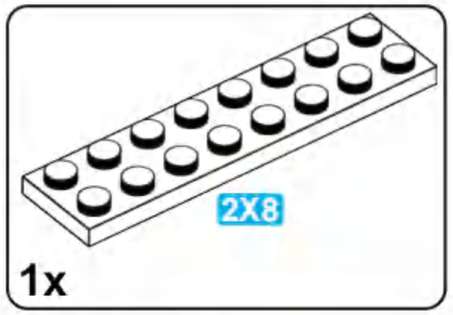

A124

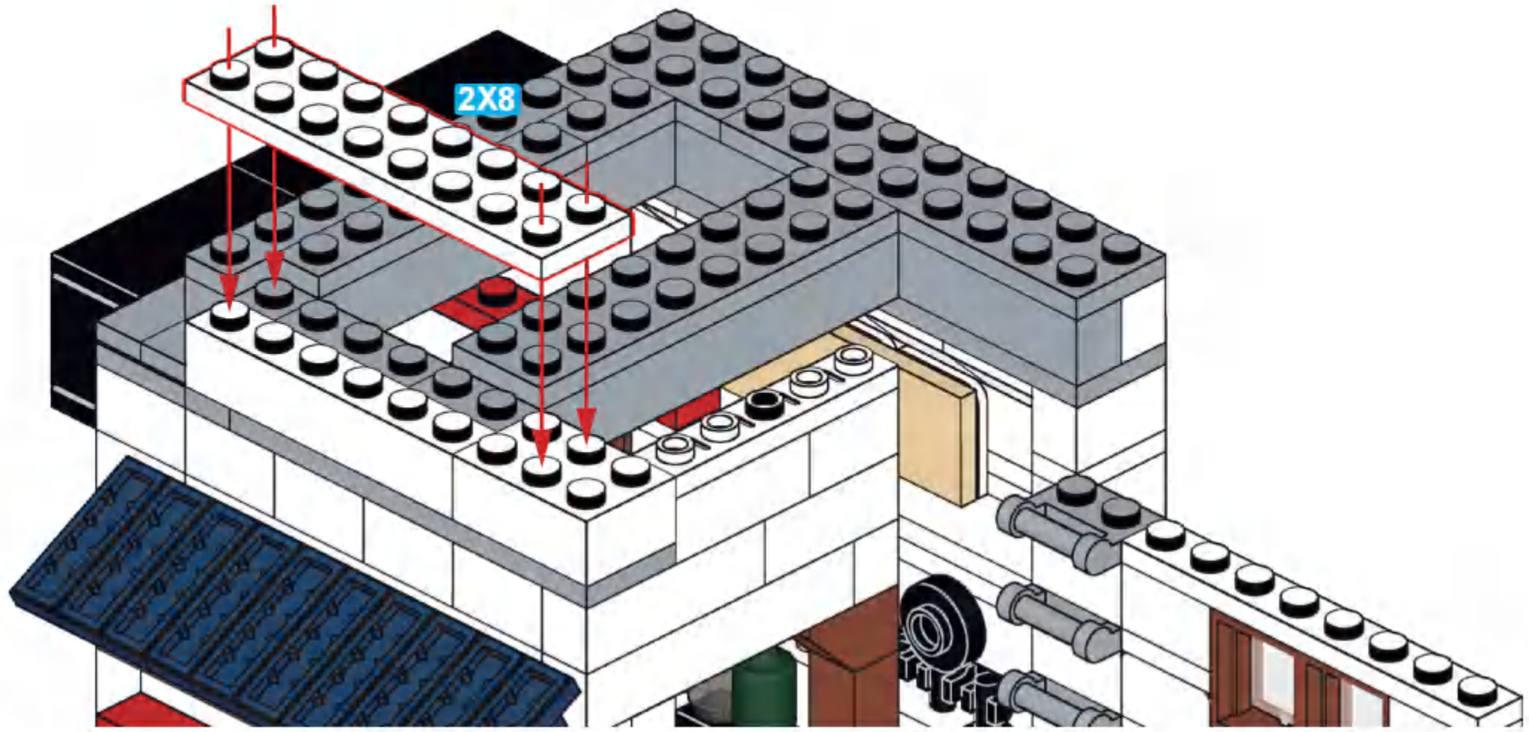

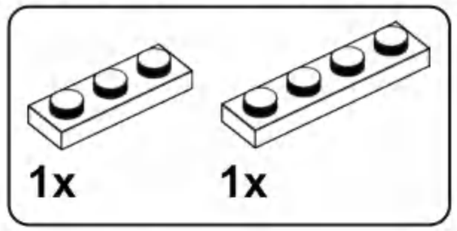

A125

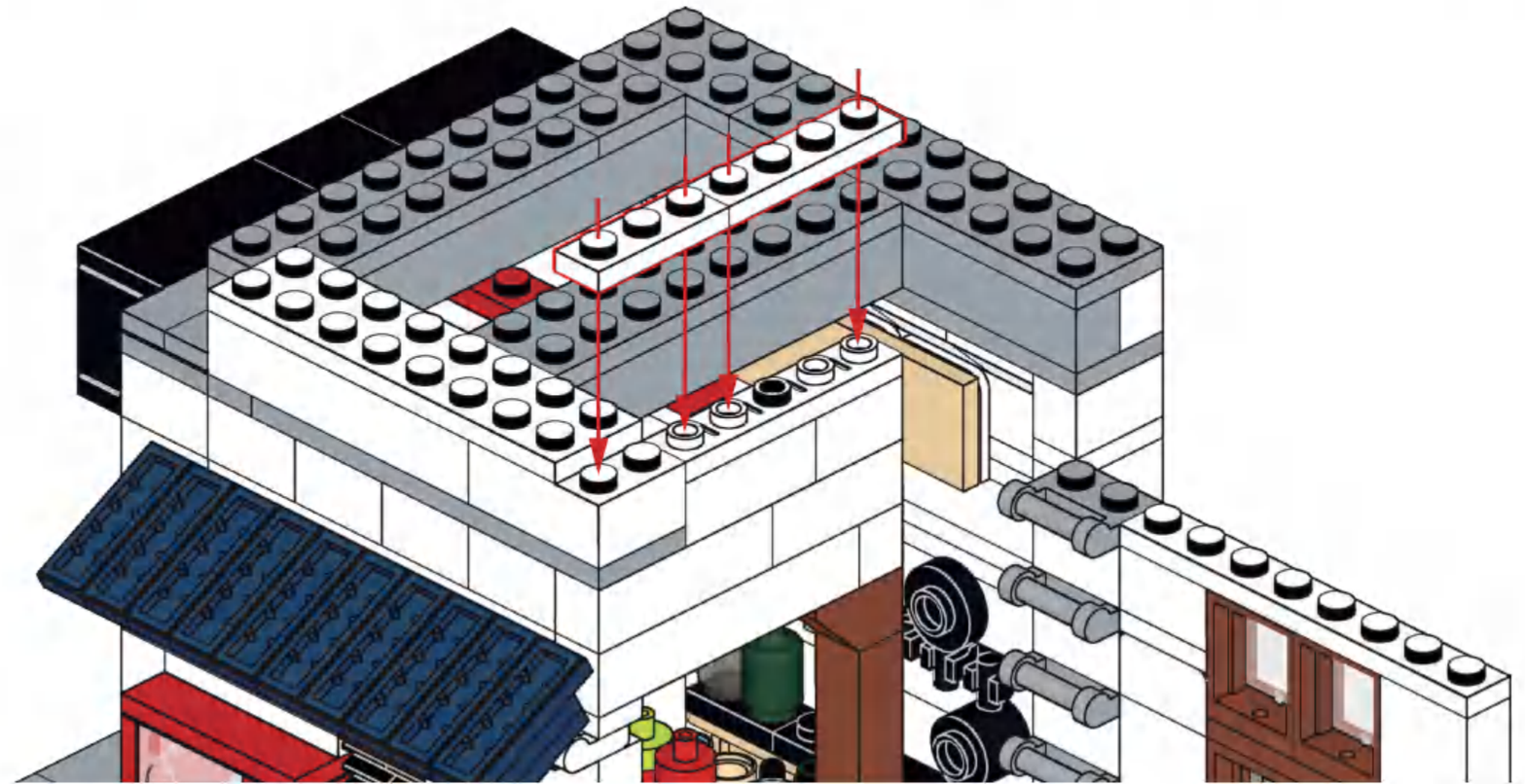

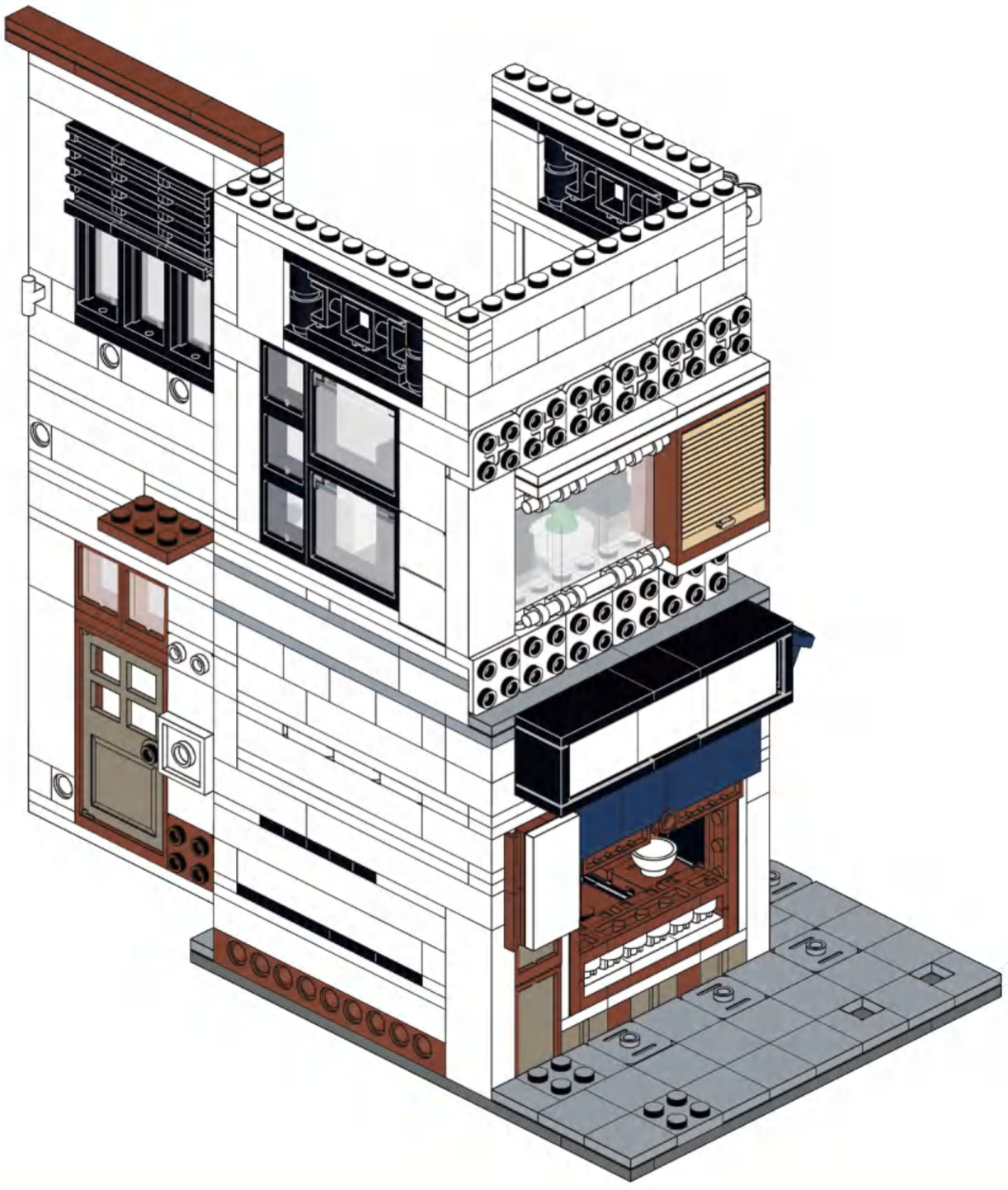

B

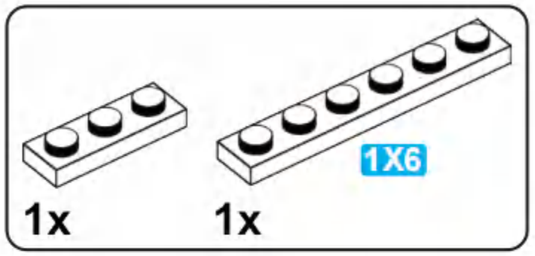

B1

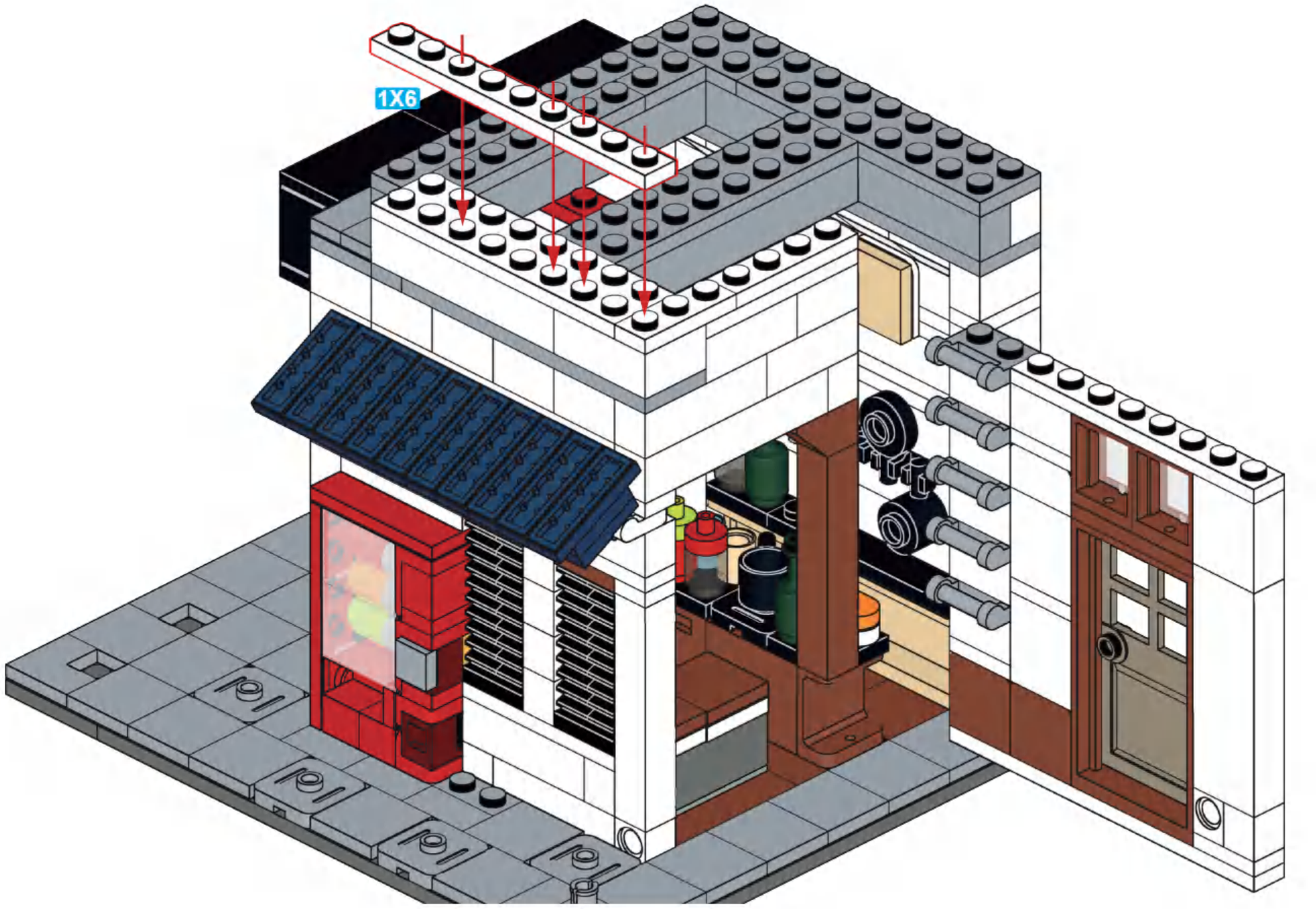

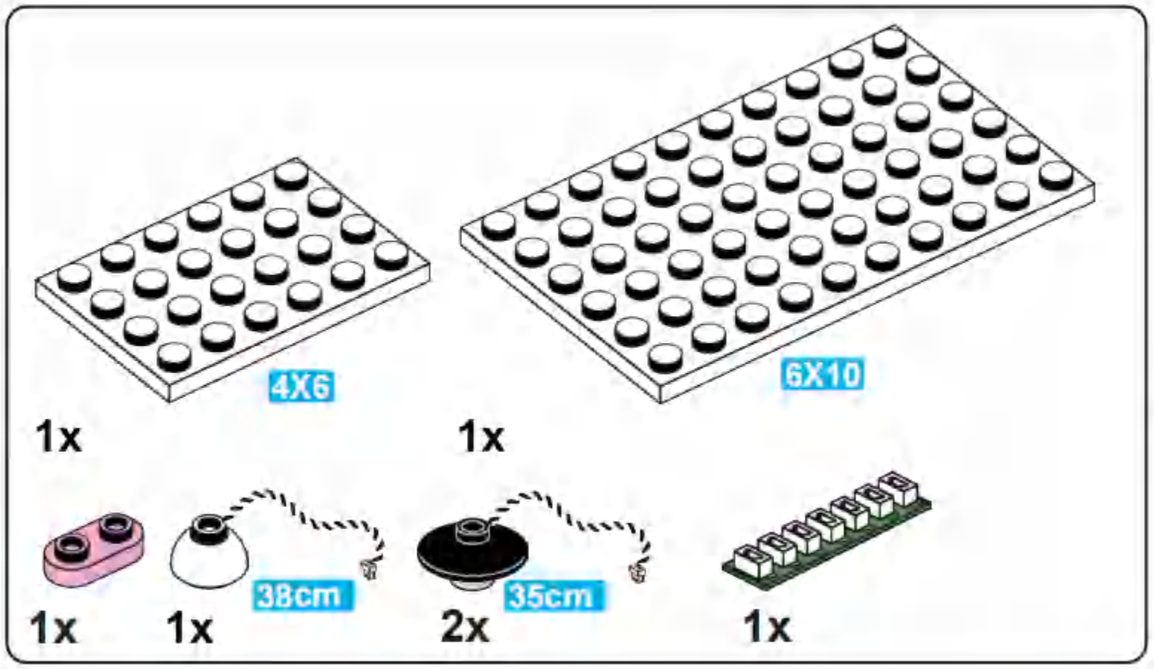

B2

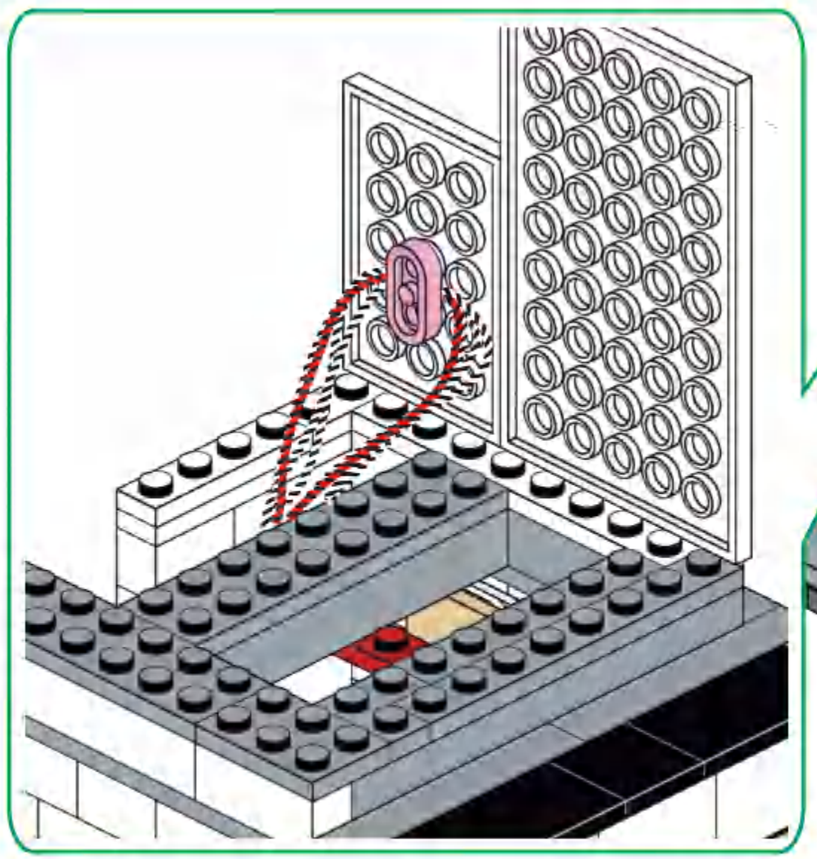

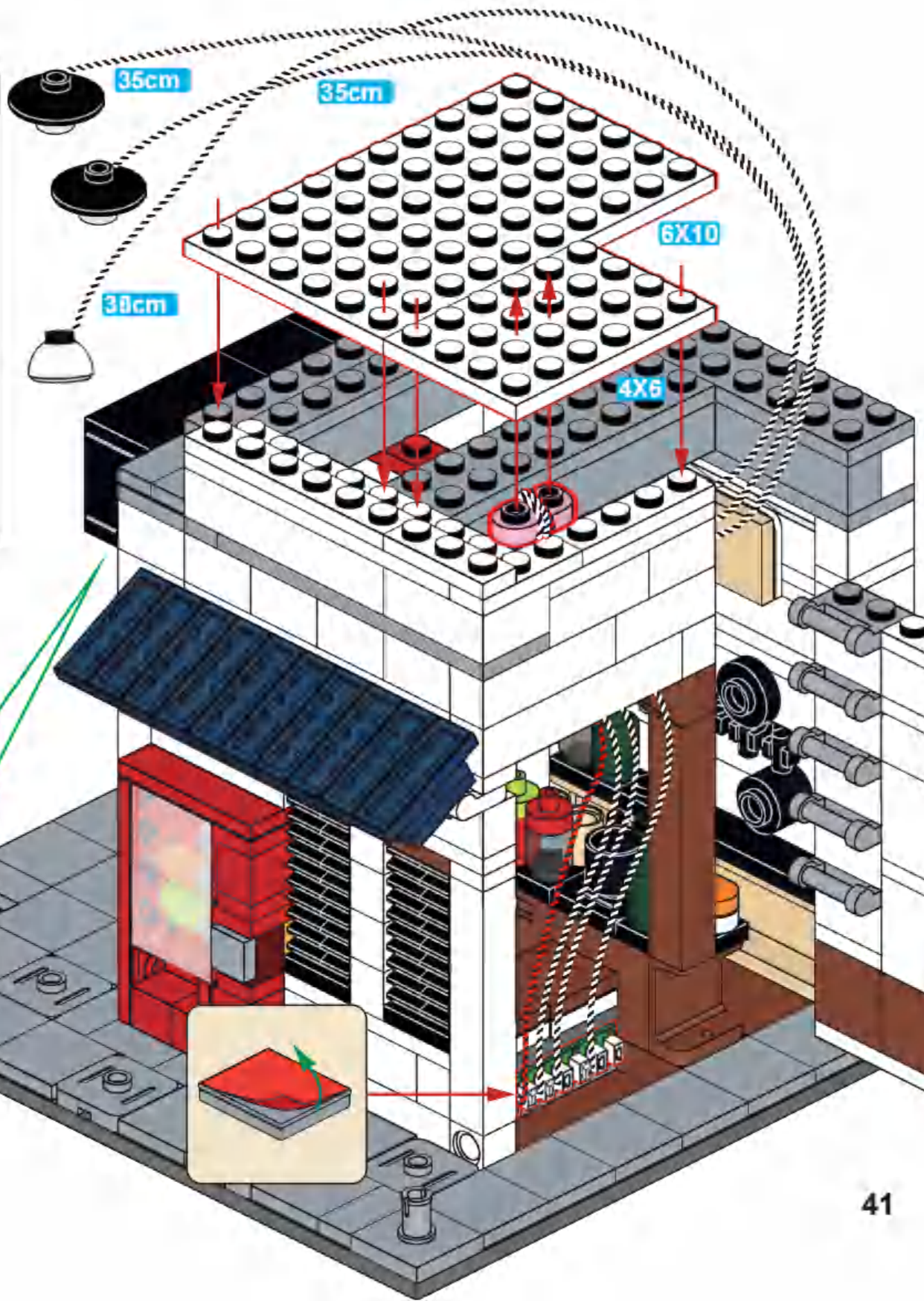

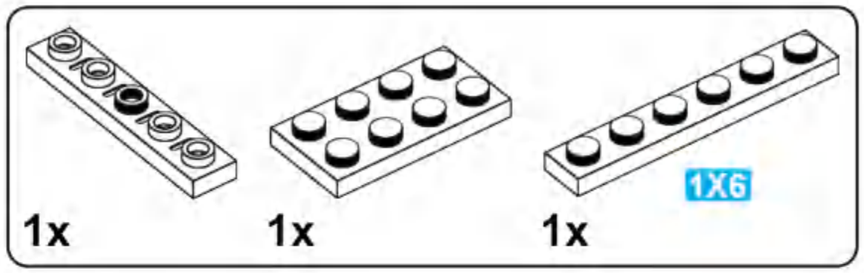

B3

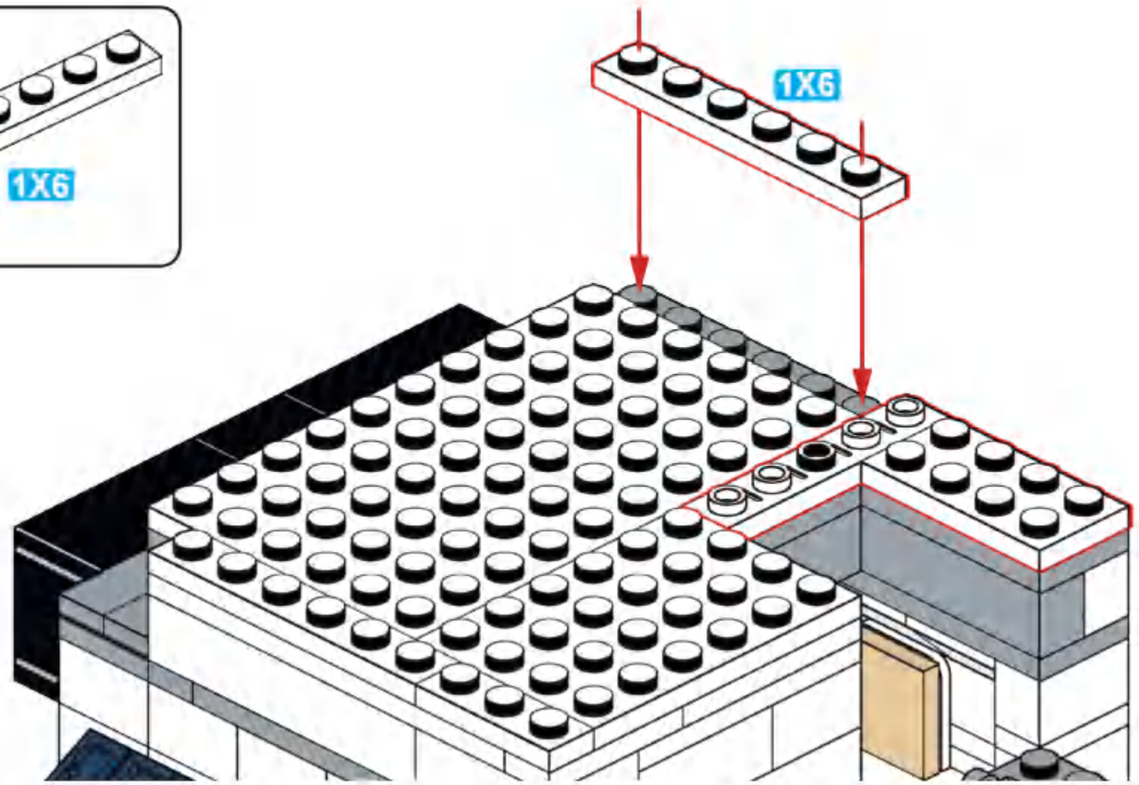

B4

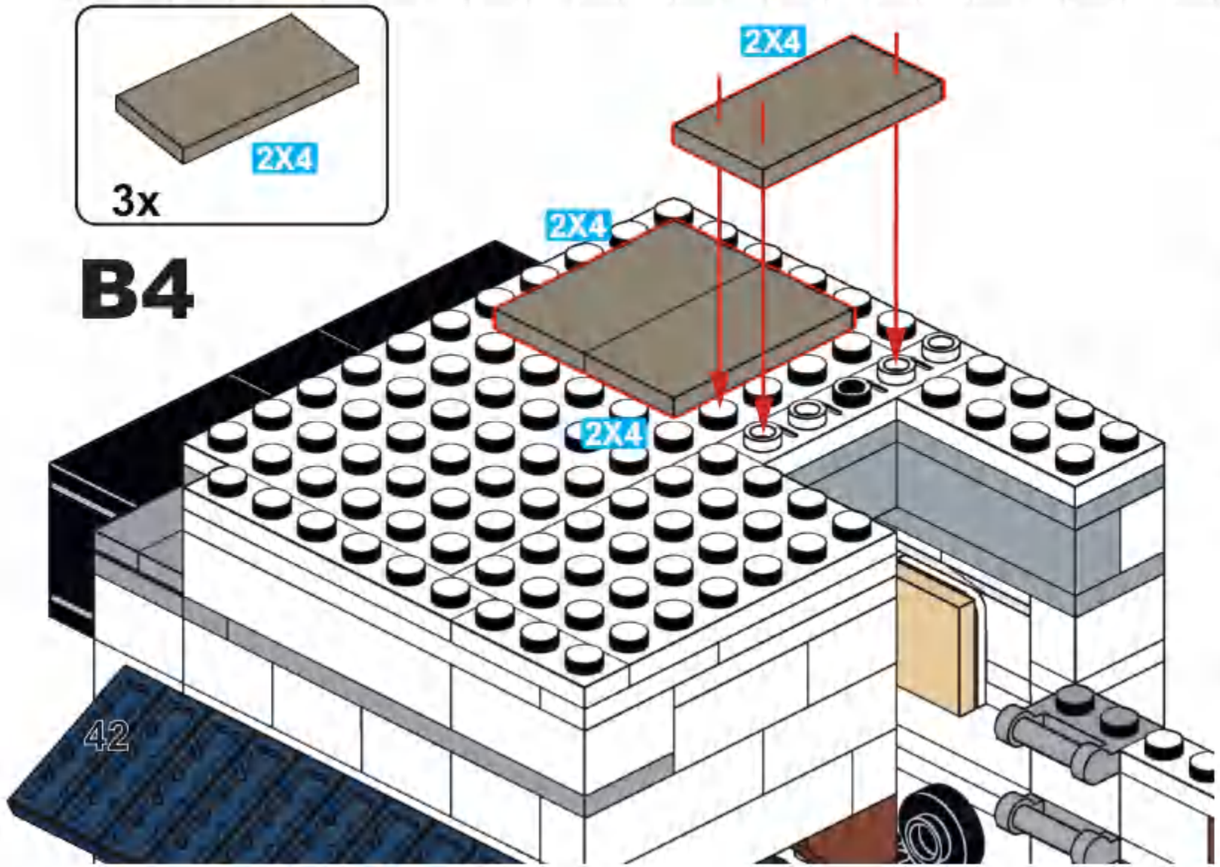

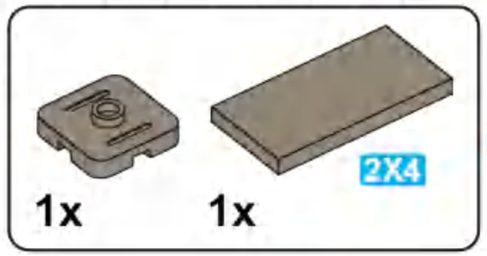

B5

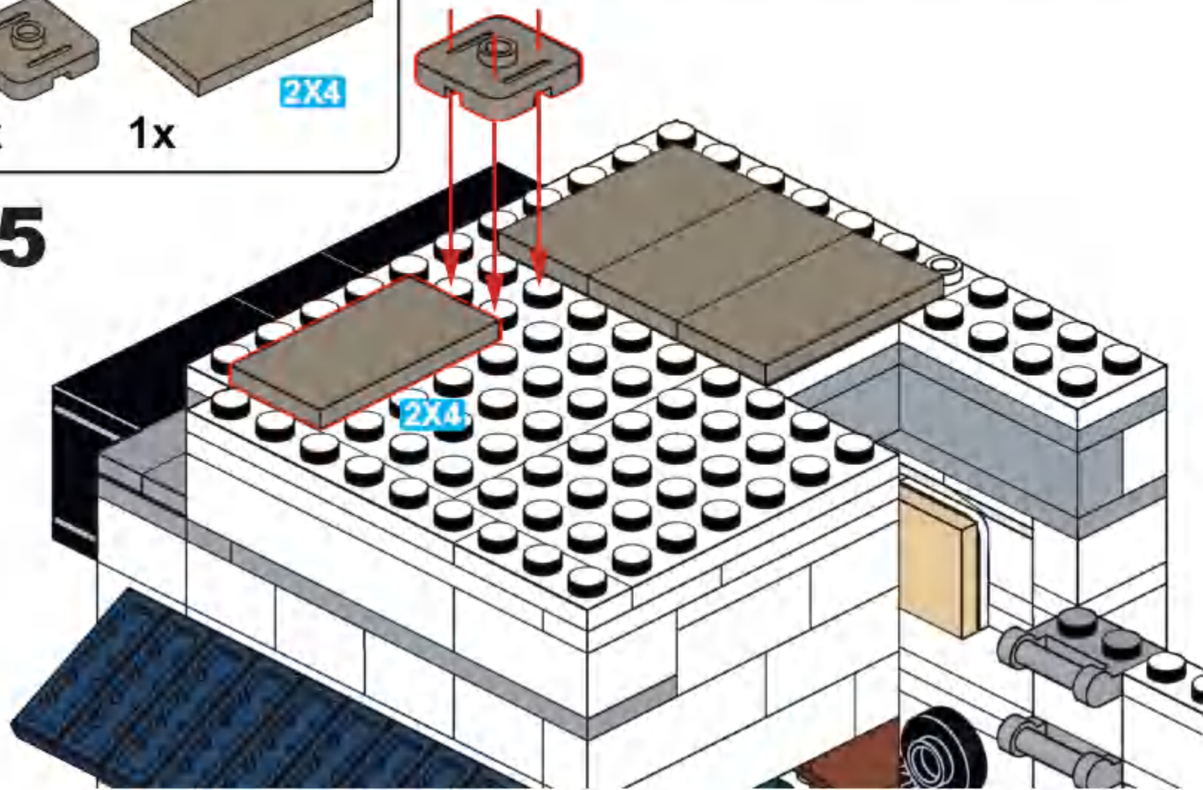

4x 1X3

B6

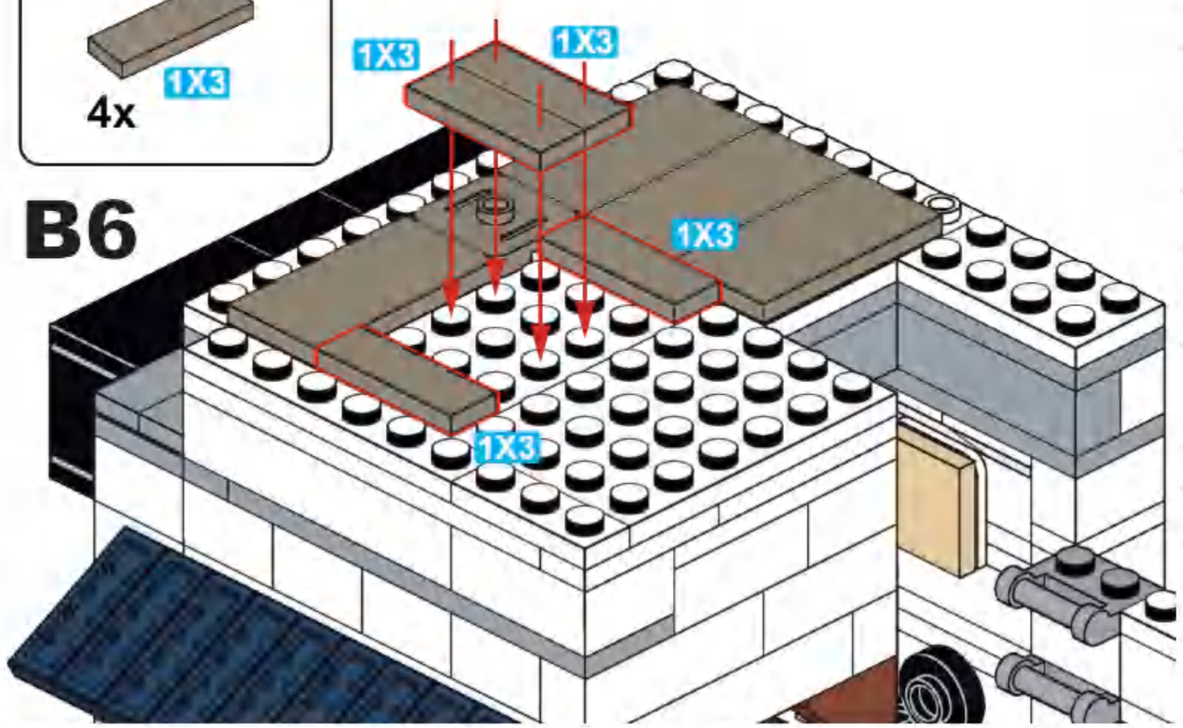

2x 1x 1X3 1x 2x 1X6

B7

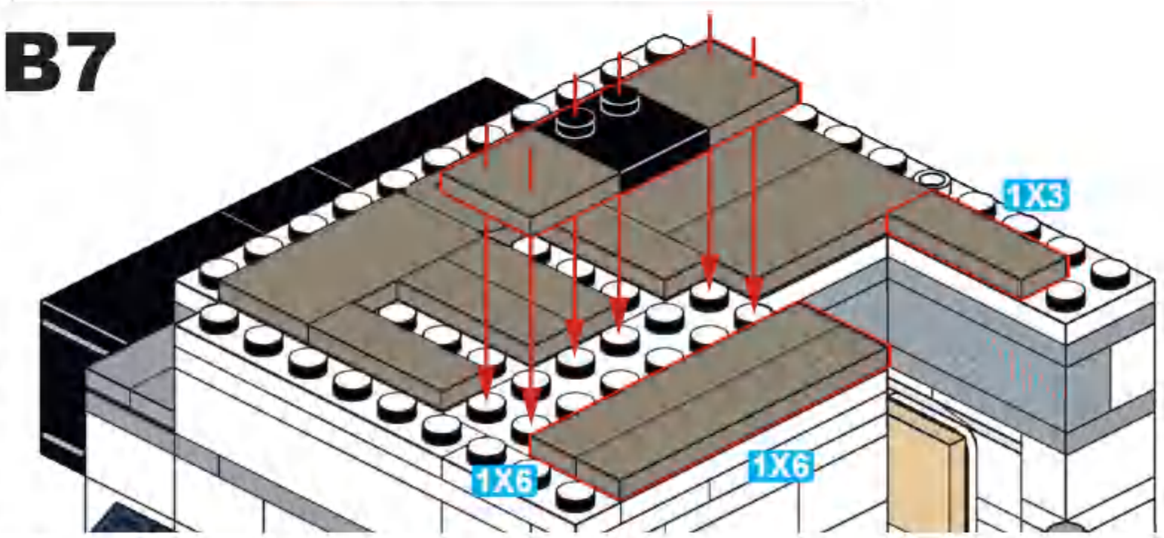

1x 5x

B8

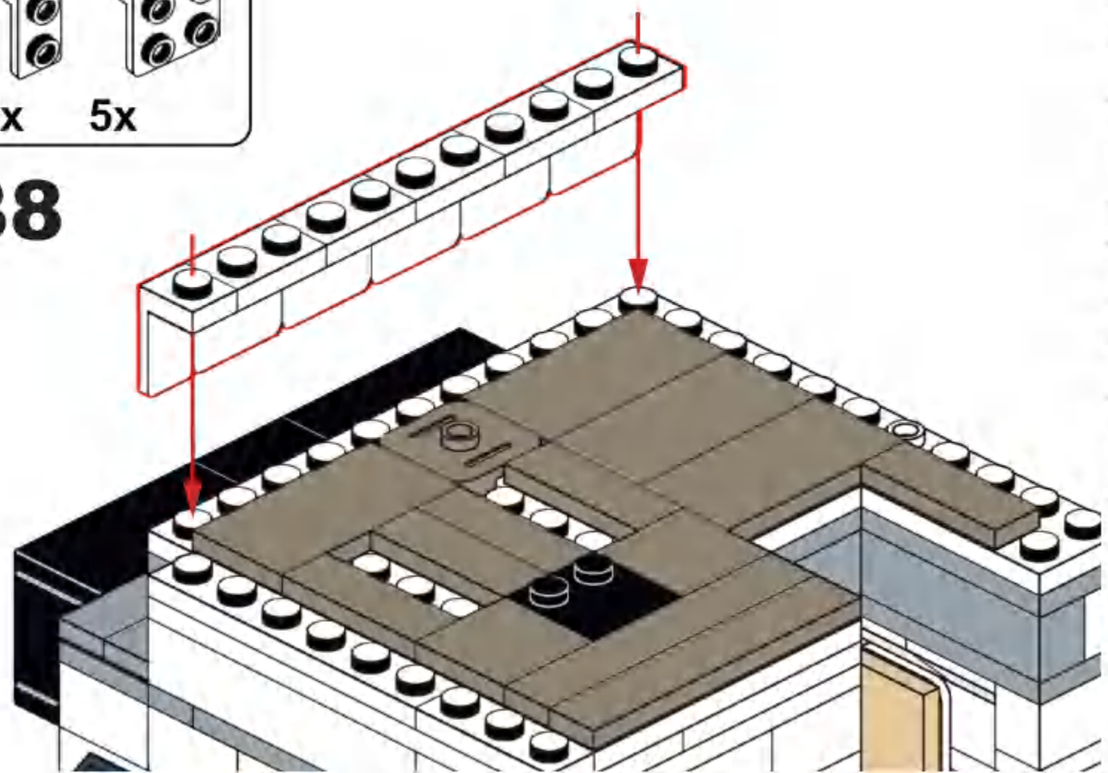

1x 1X10

B9

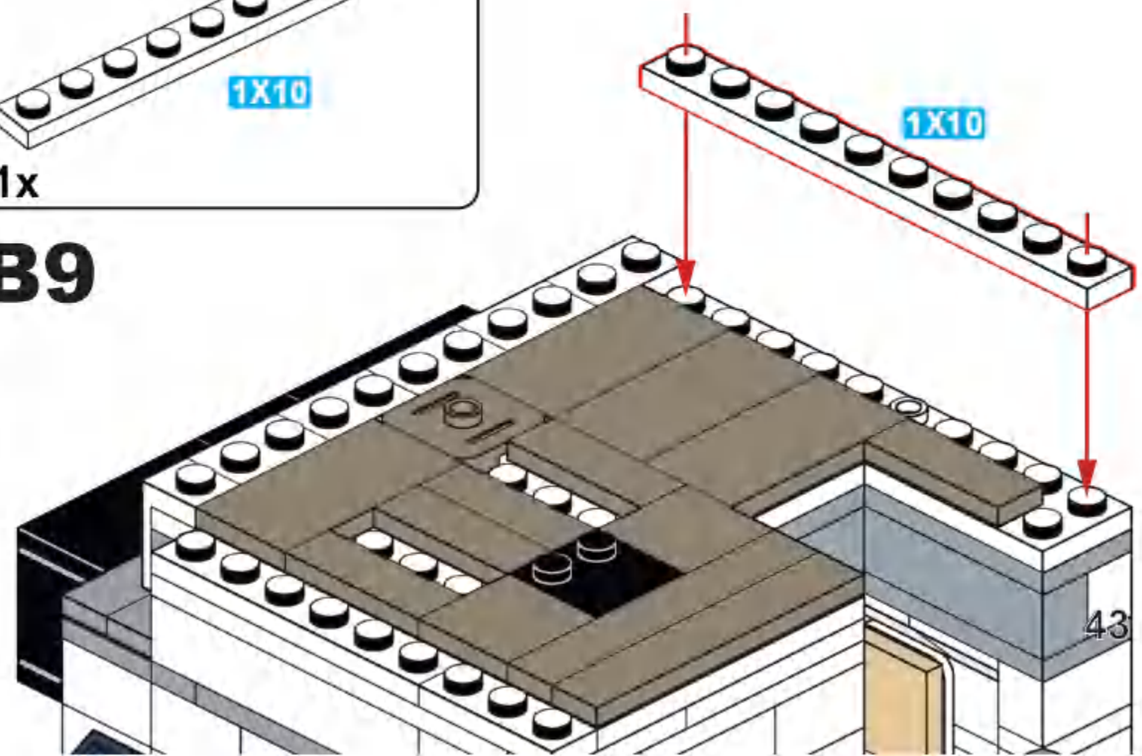

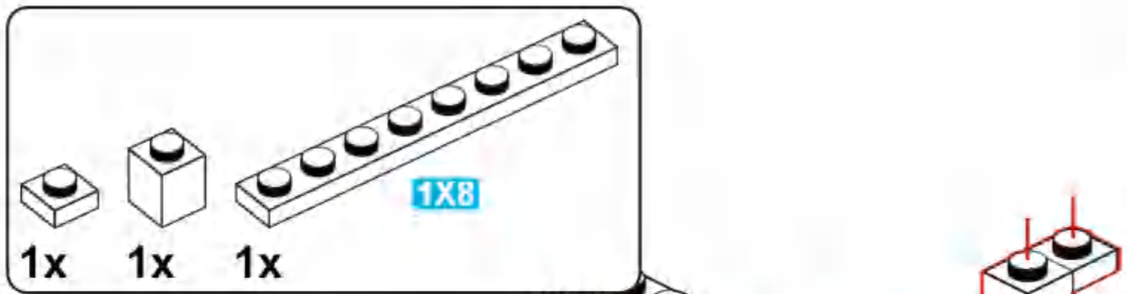

B10

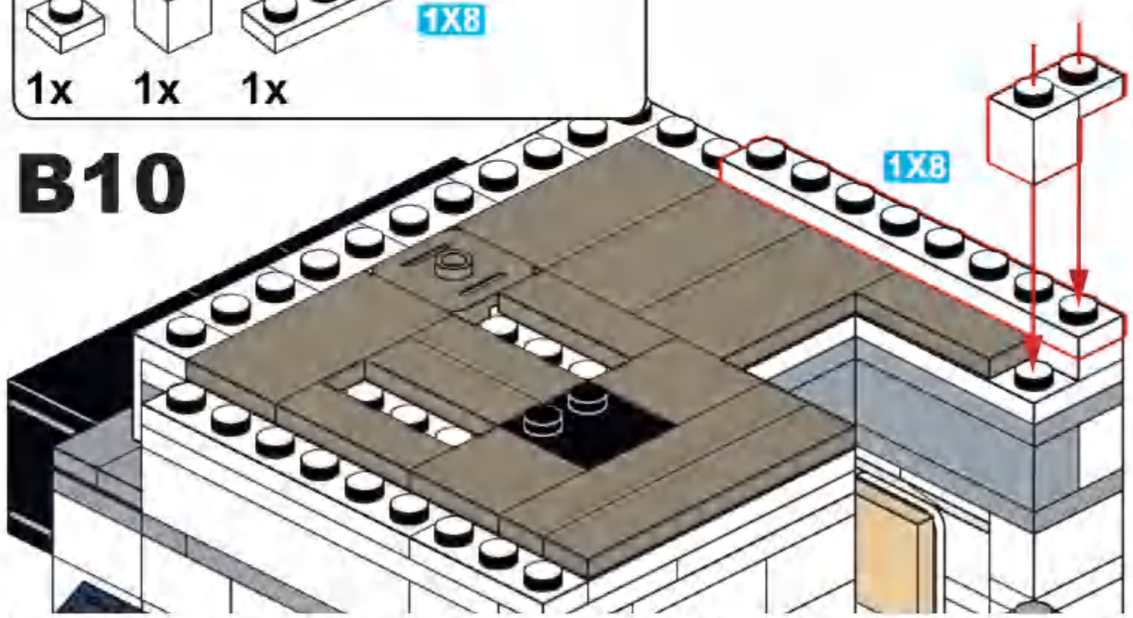

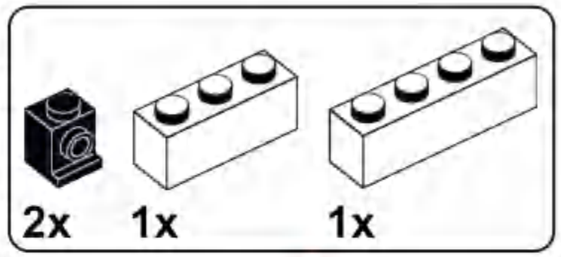

B11

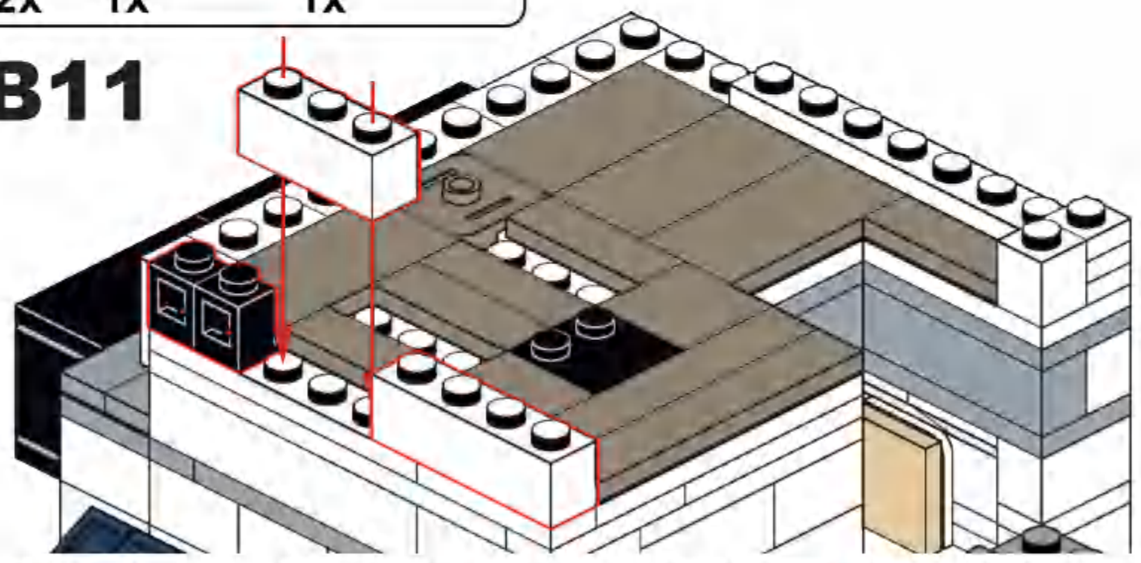

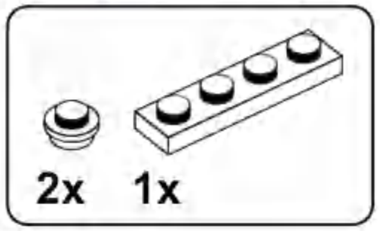

B12

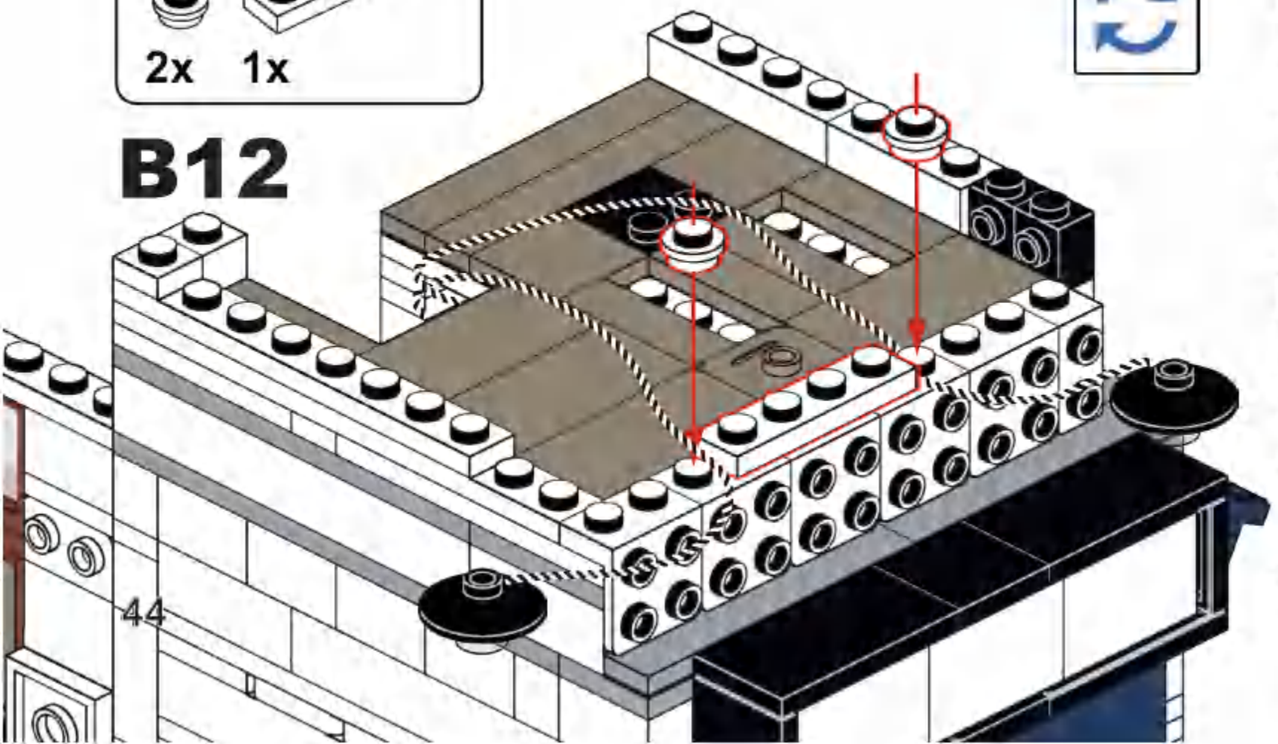

B13

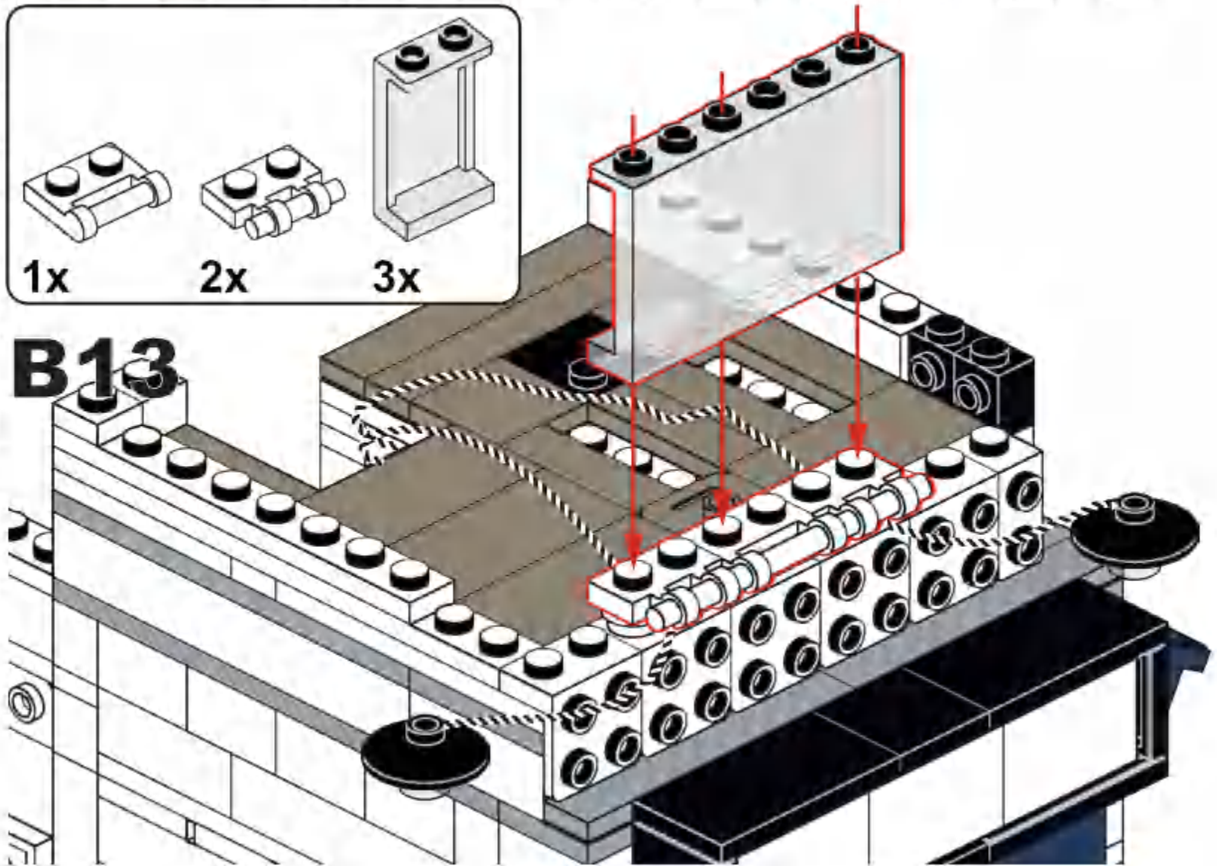

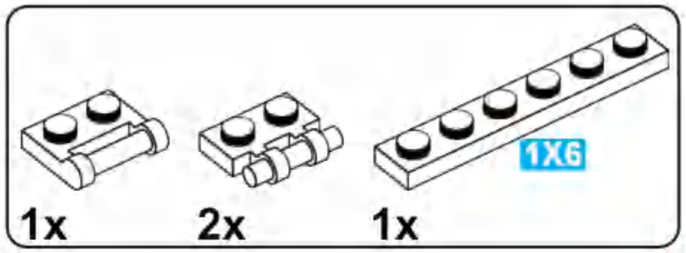

B14

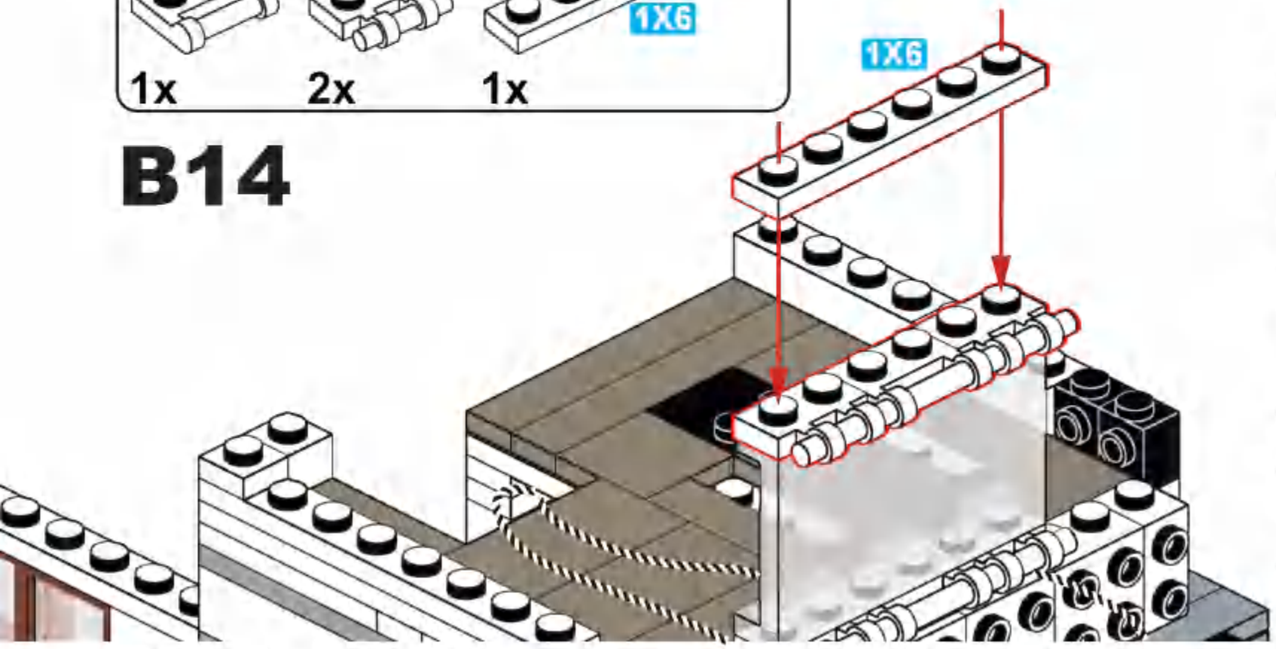

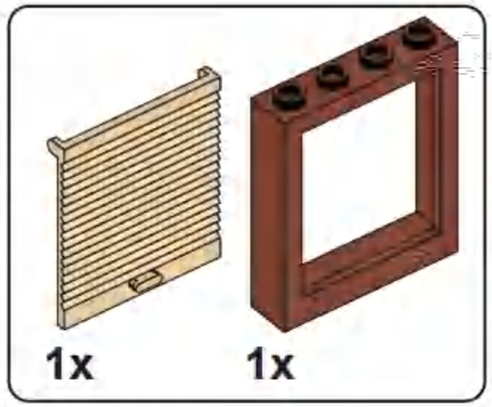

B15

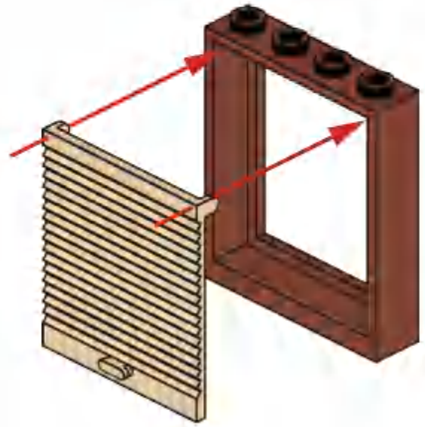

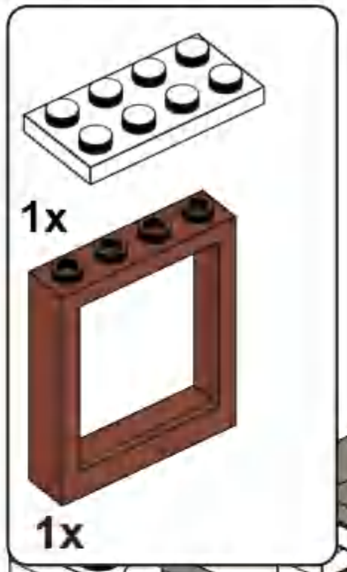

B16

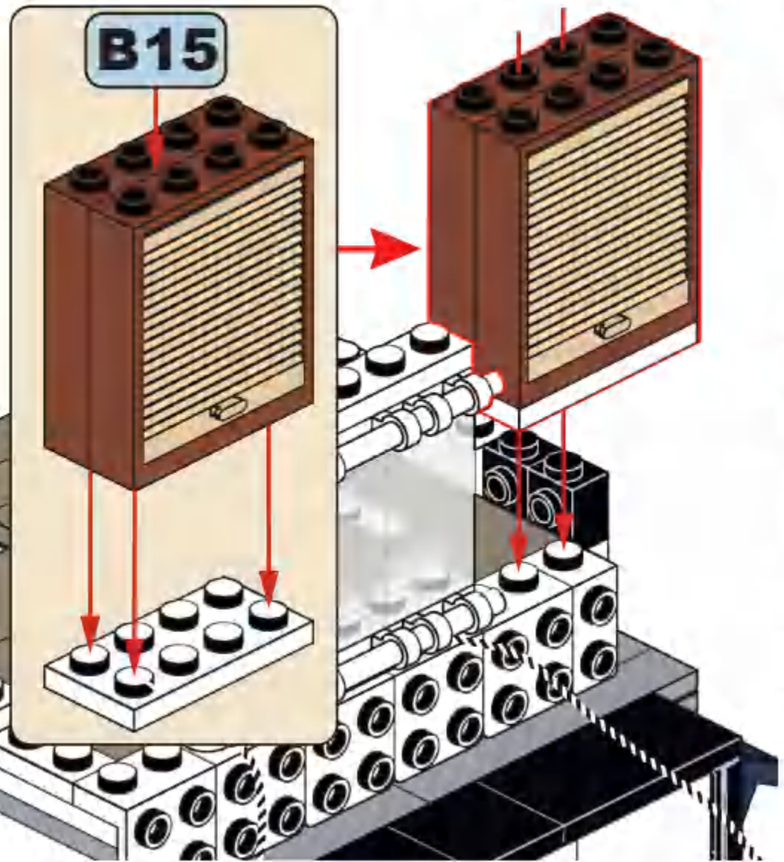

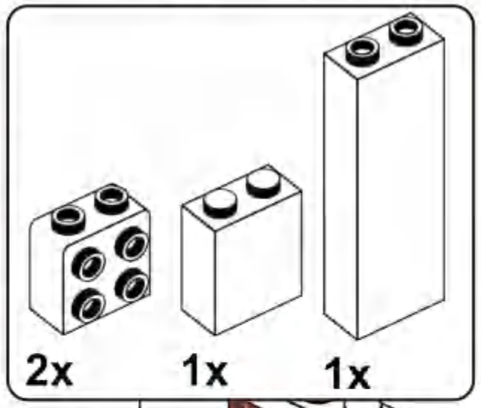

B17

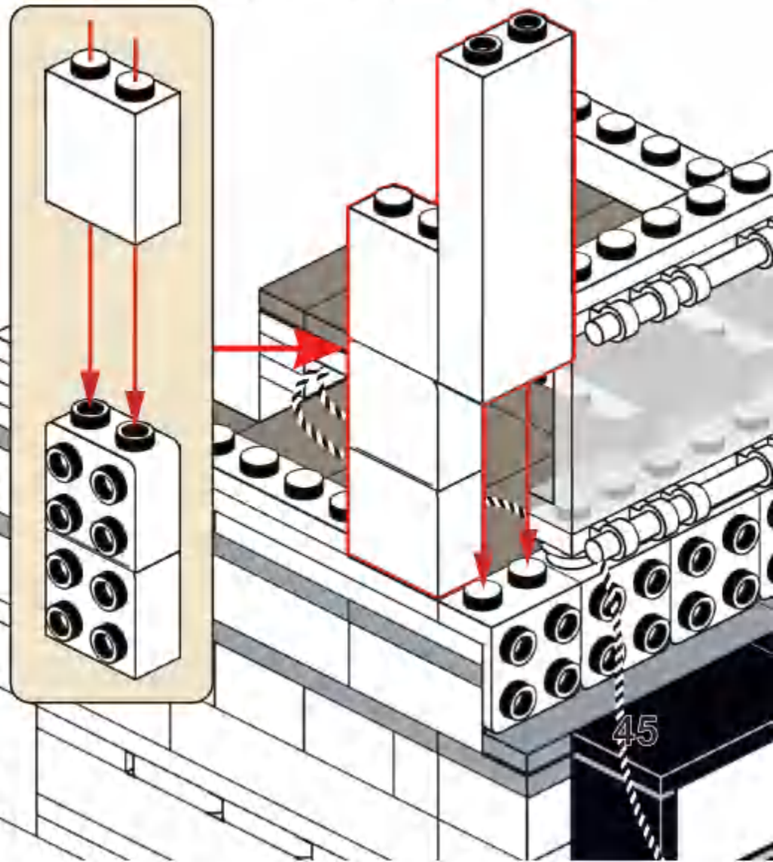

2x 2x

B18

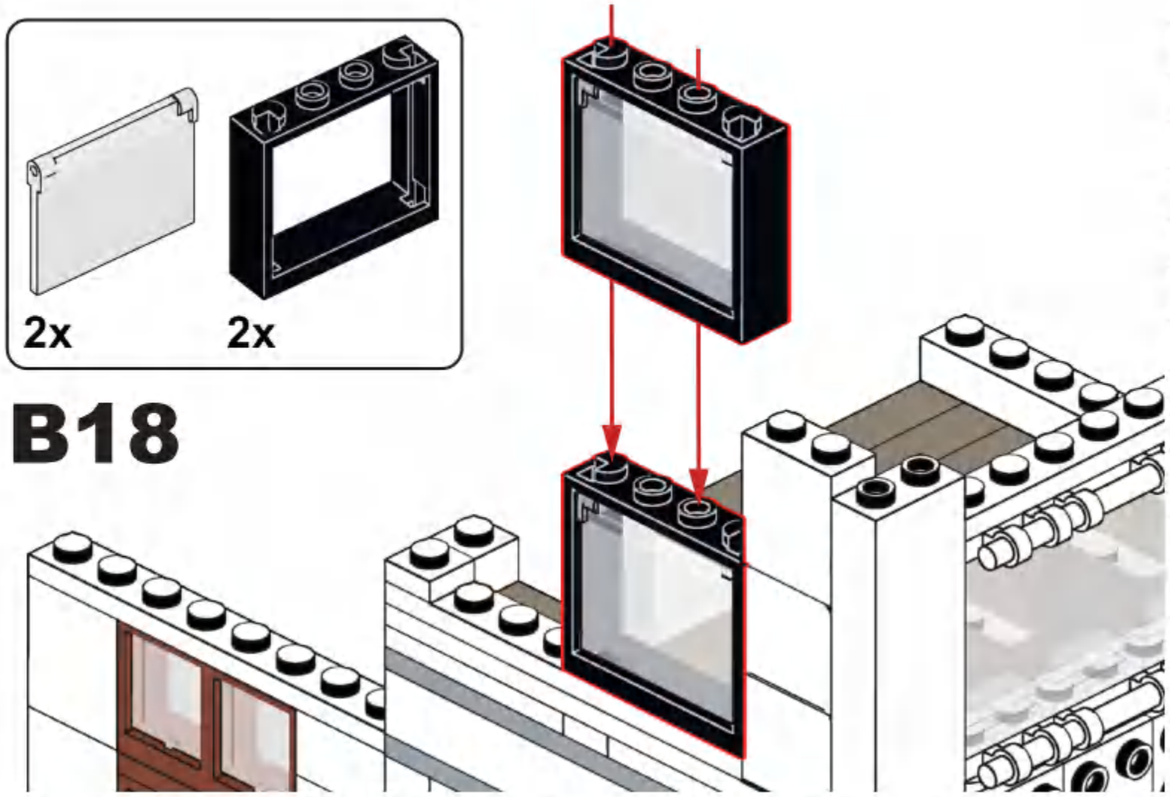

3x 3x

B19

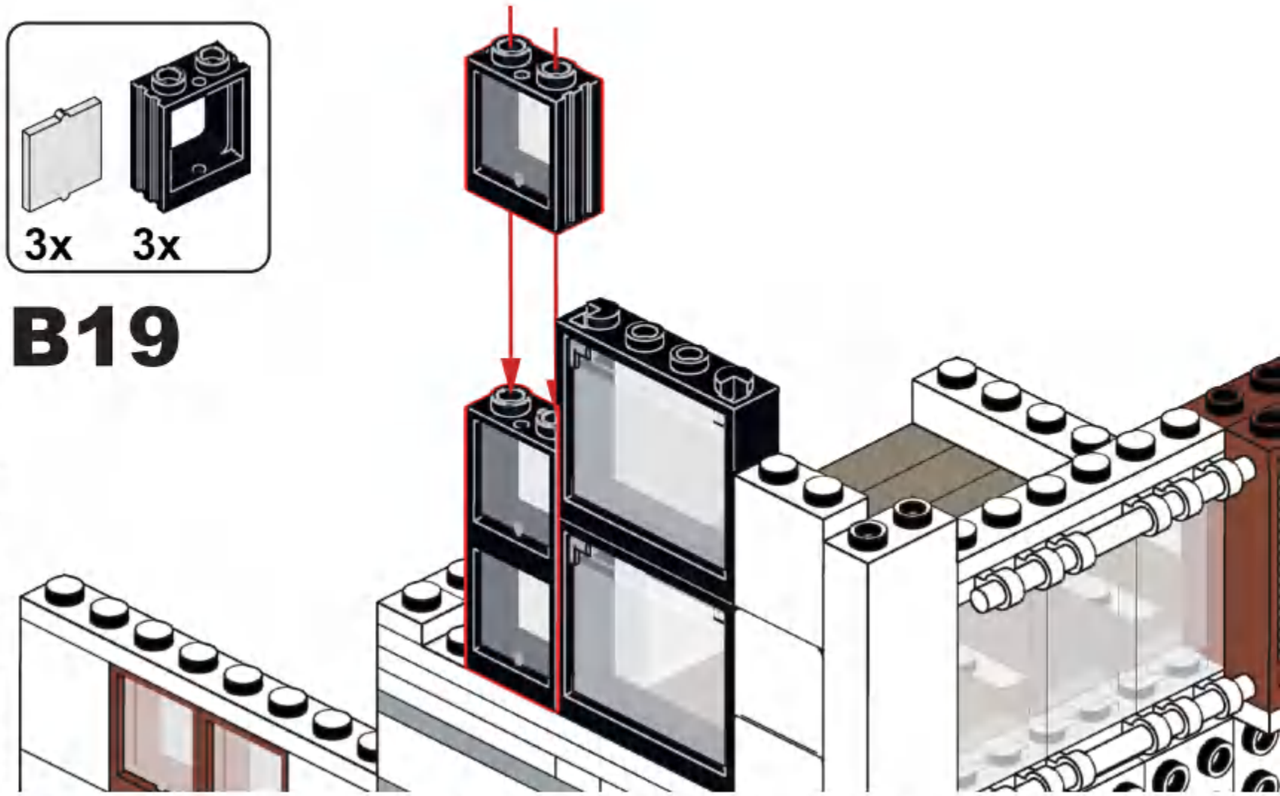

1x

B20

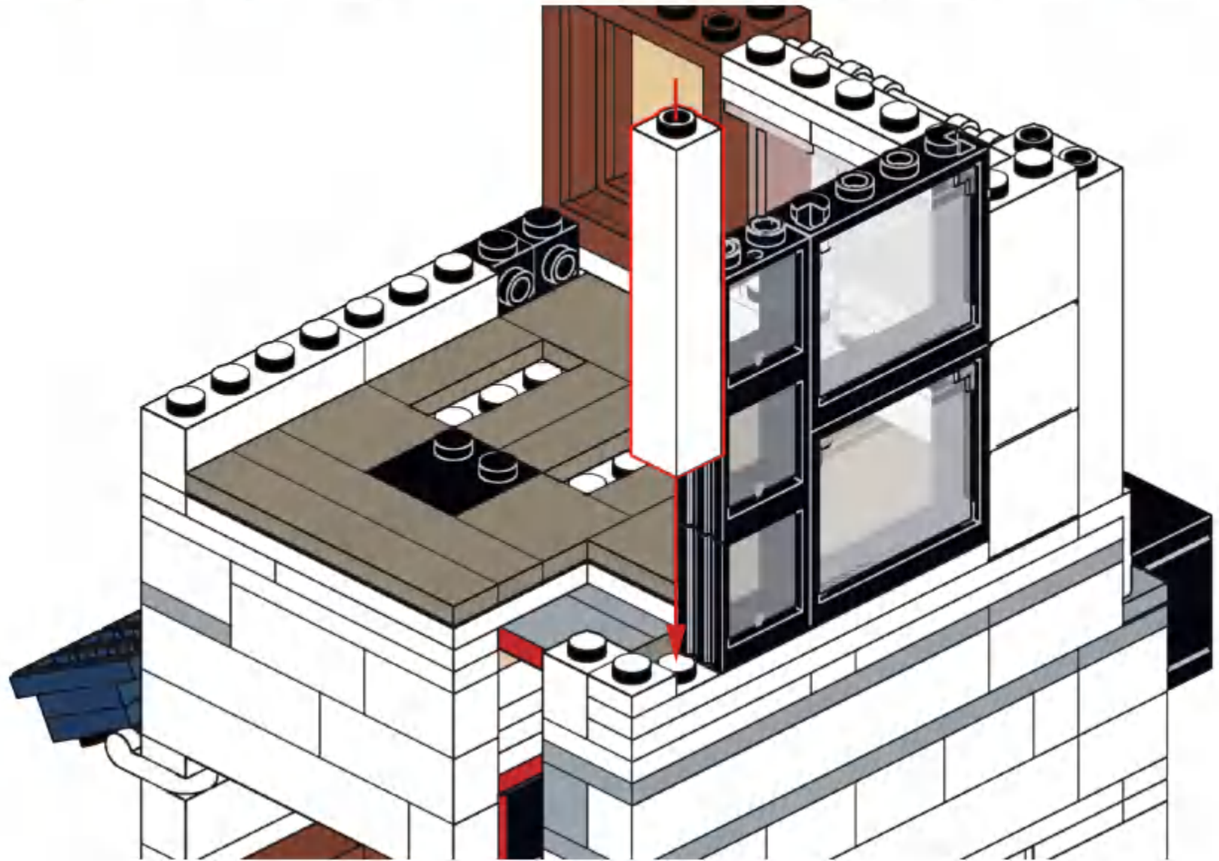

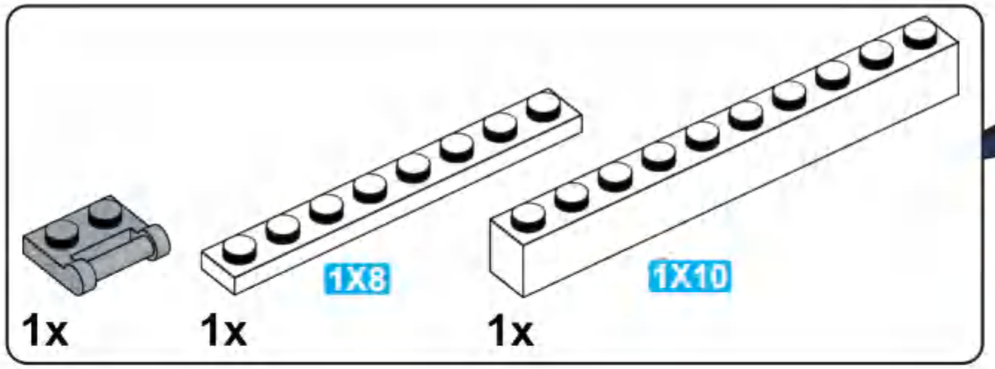

B21

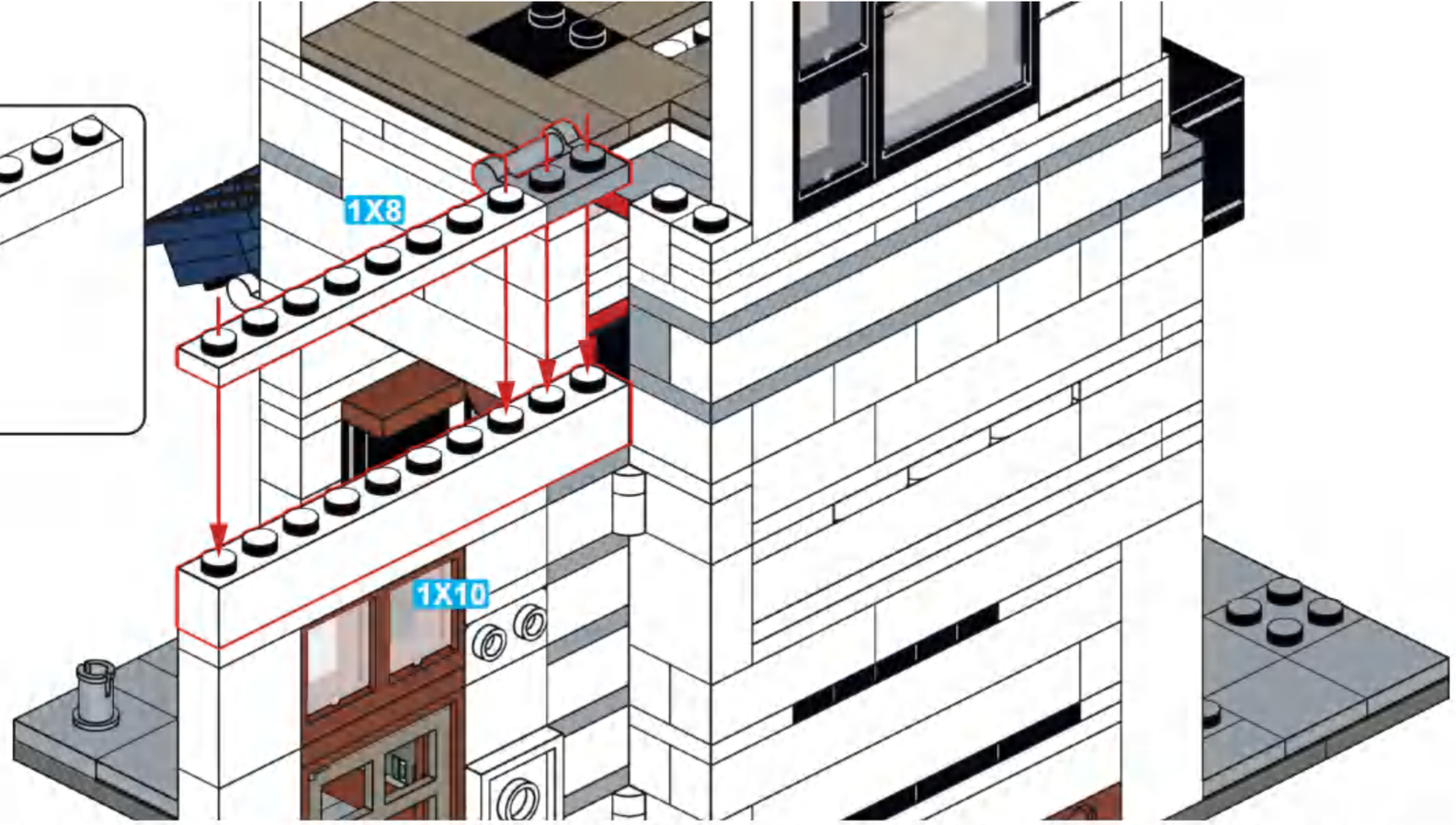

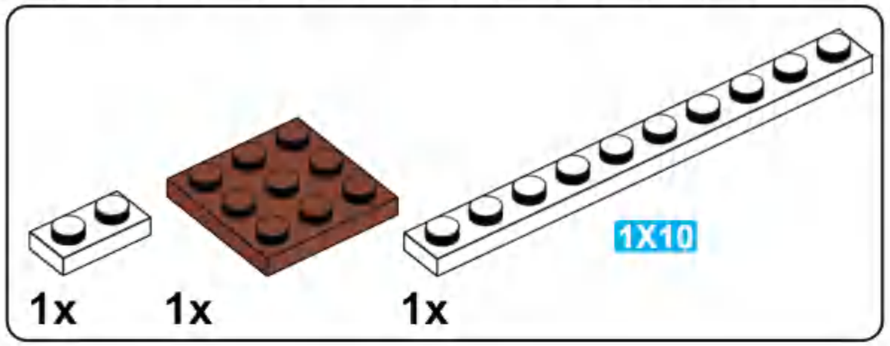

B22

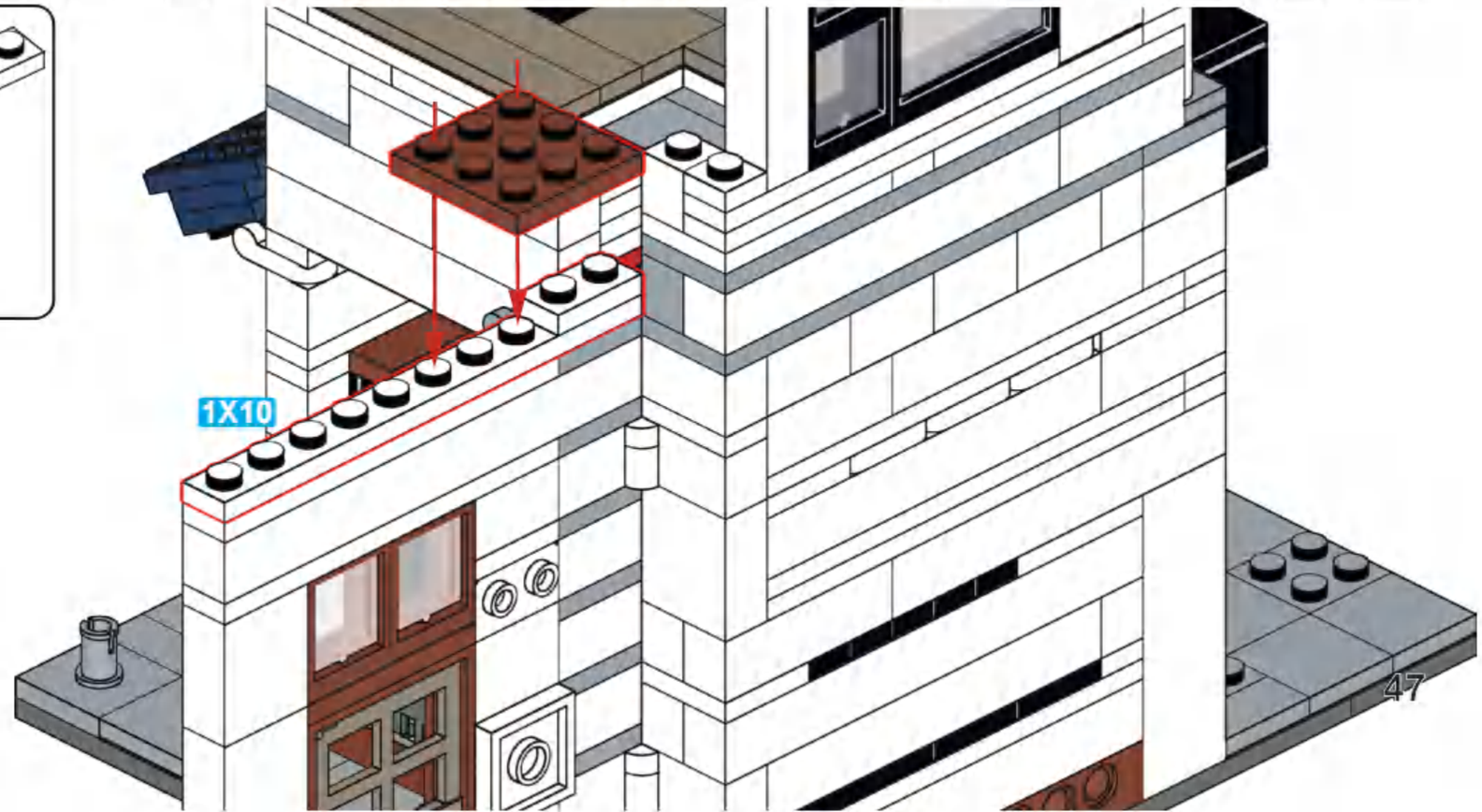

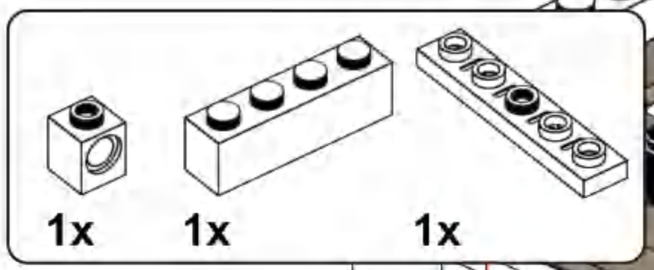

B23

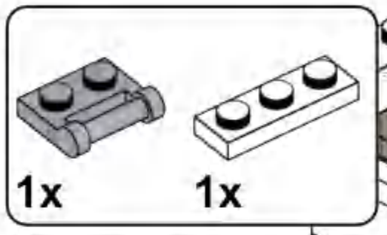

B24

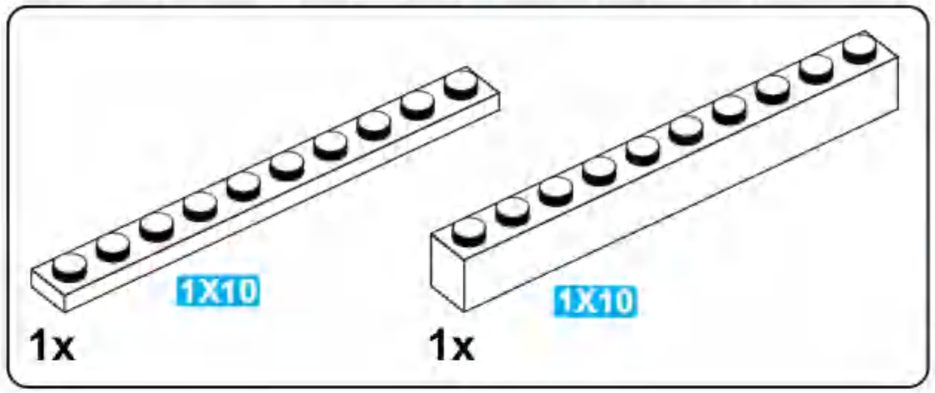

B25

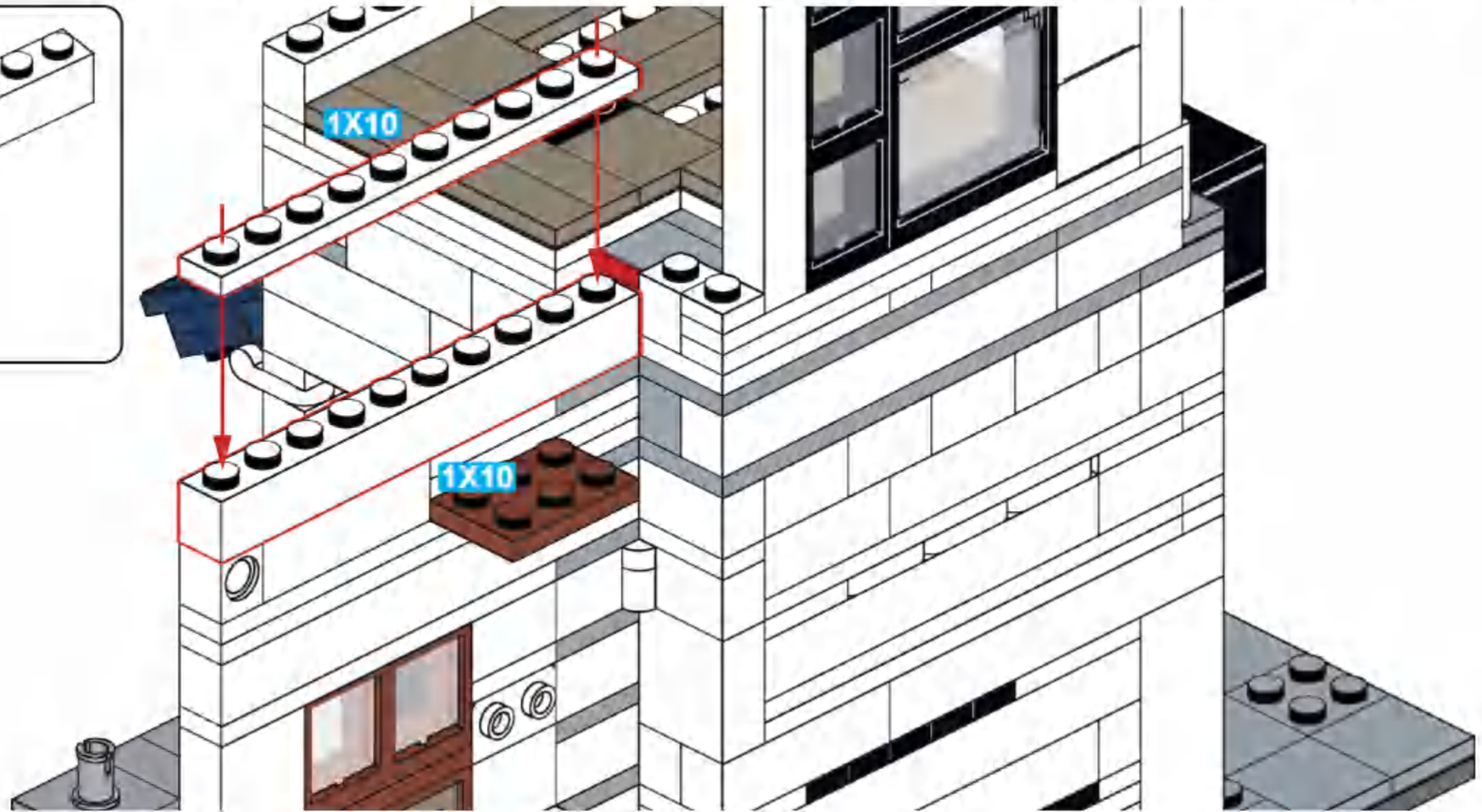

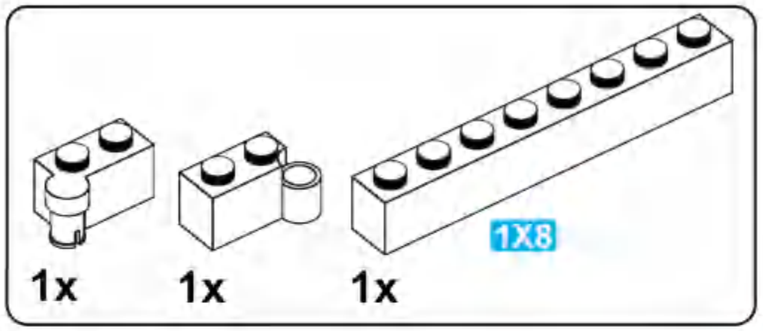

B26

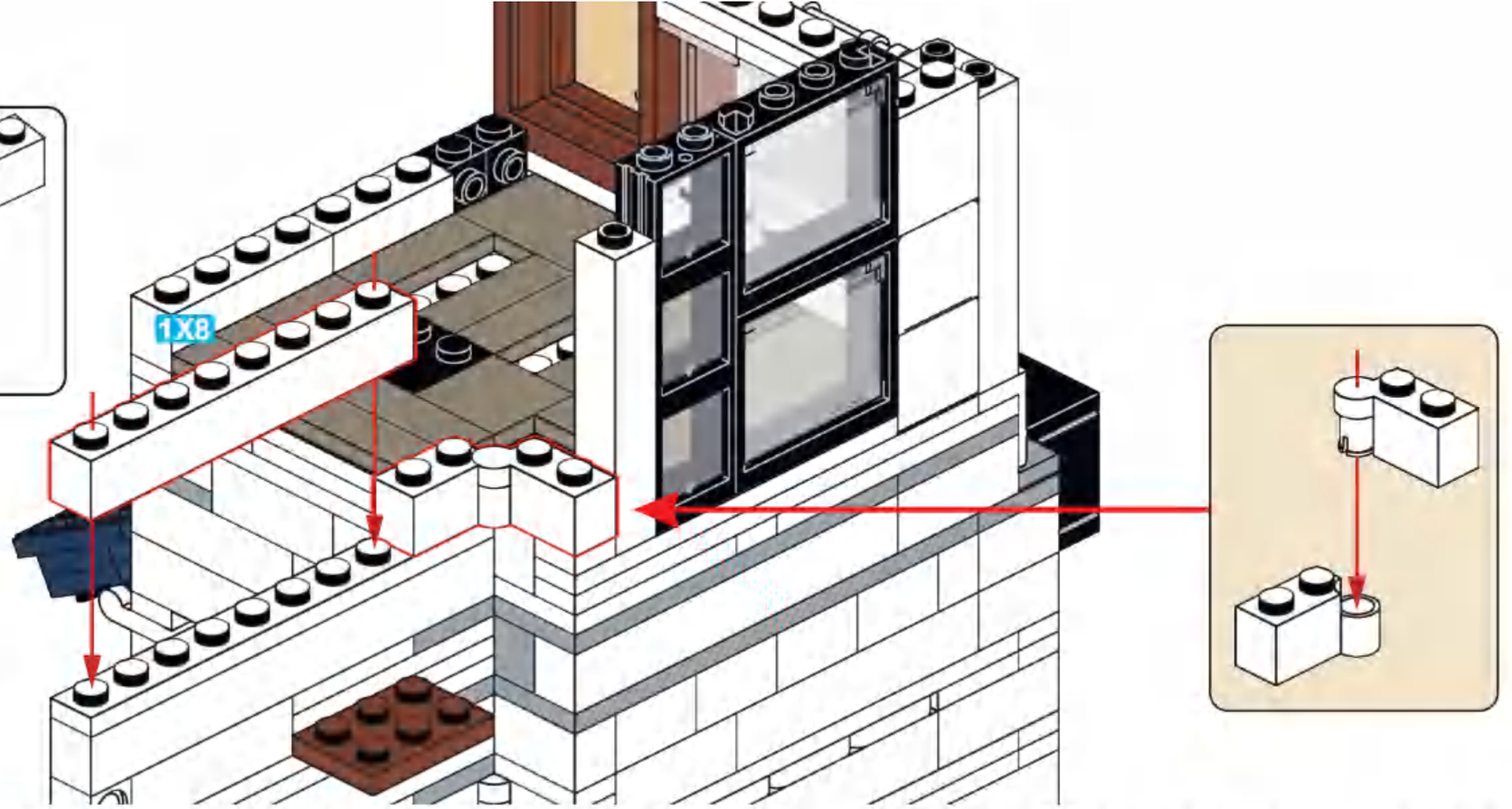

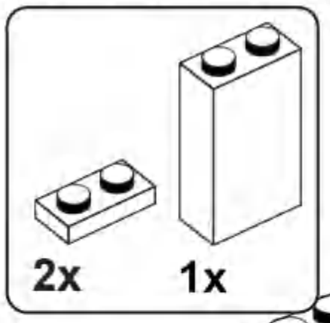

B27

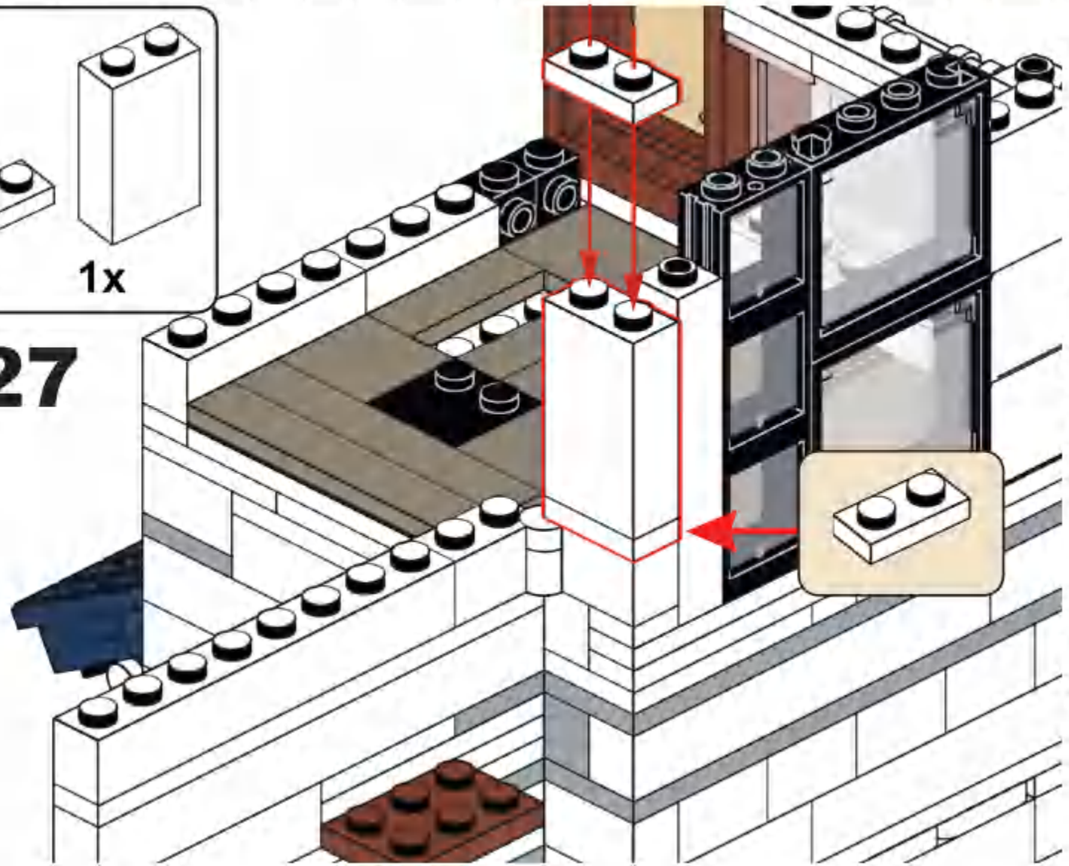

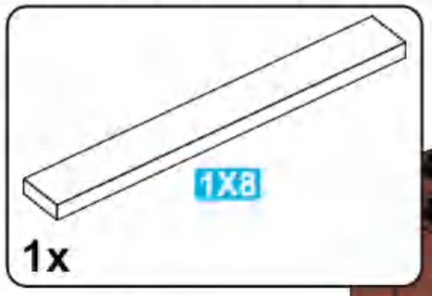

B28

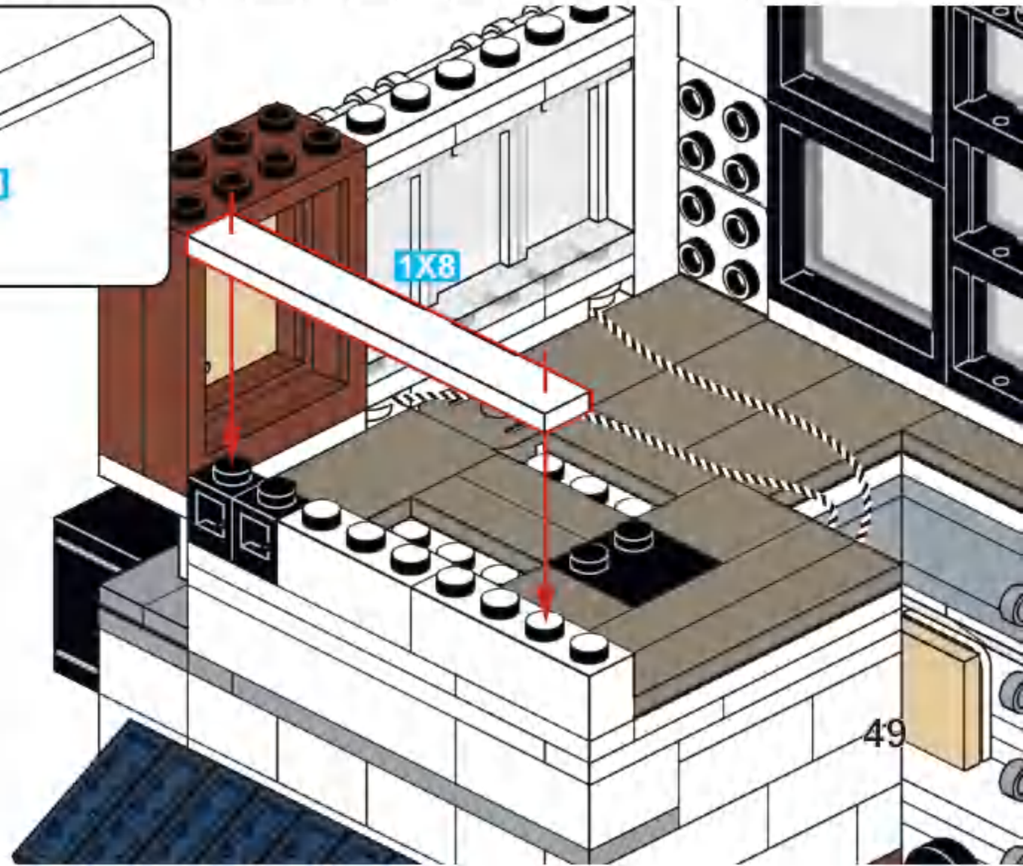

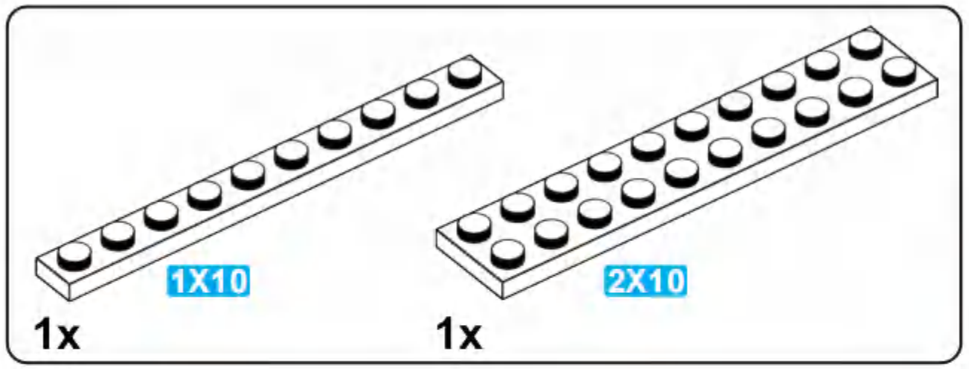

B29

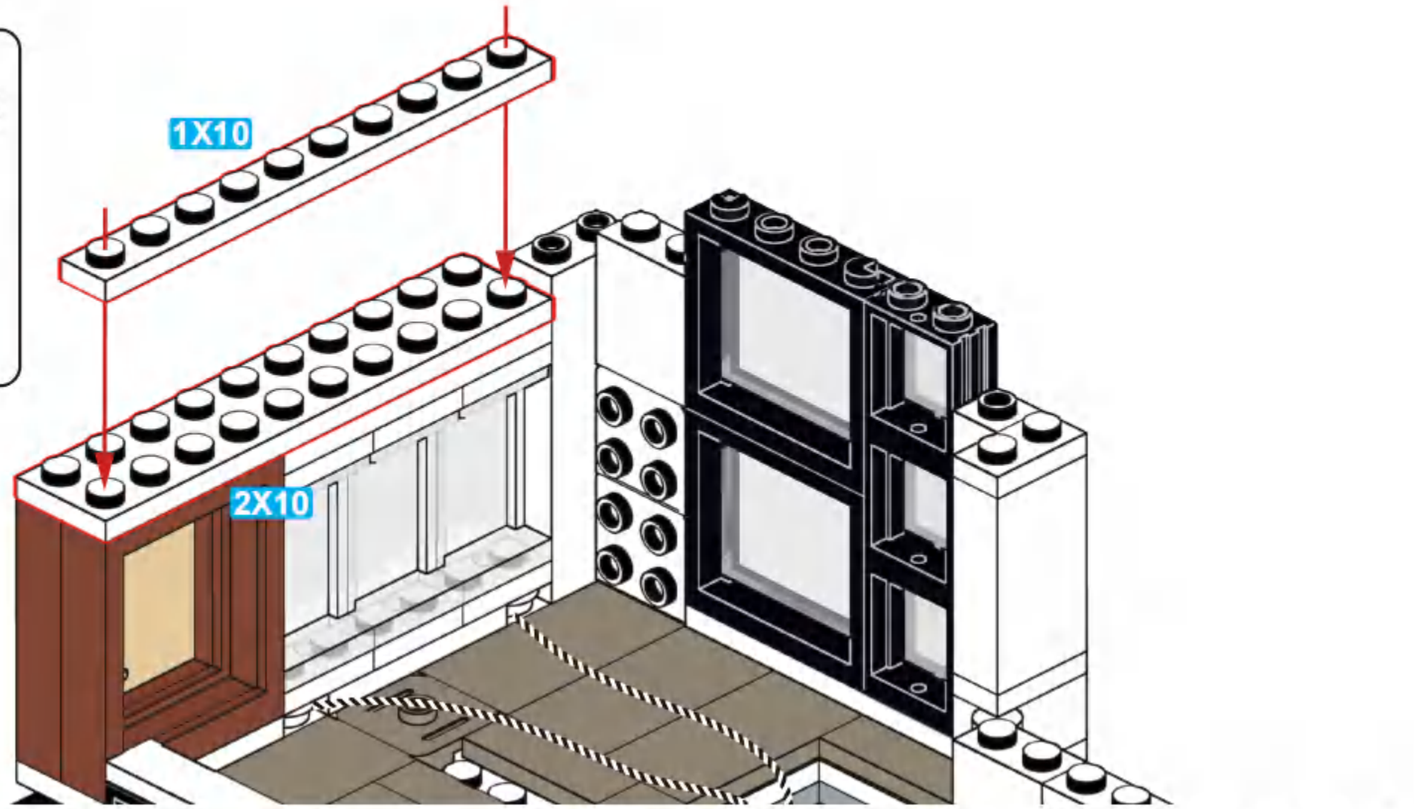

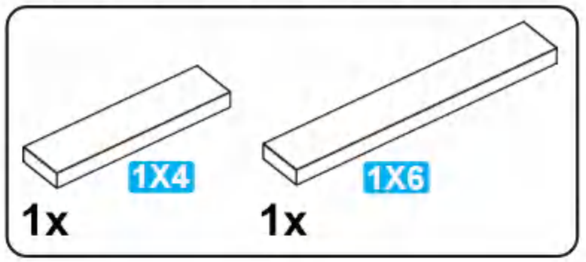

B30

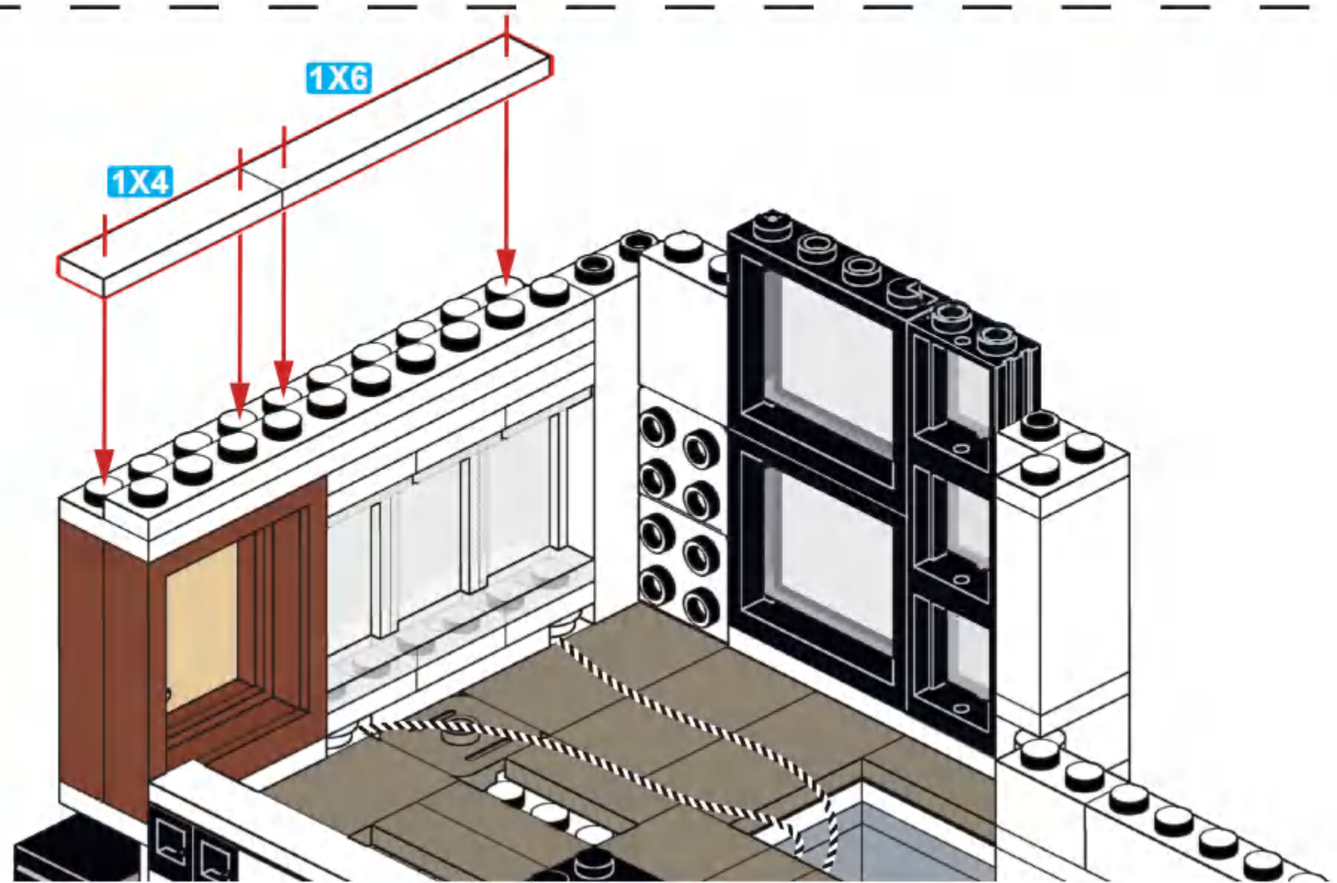

6x

B31

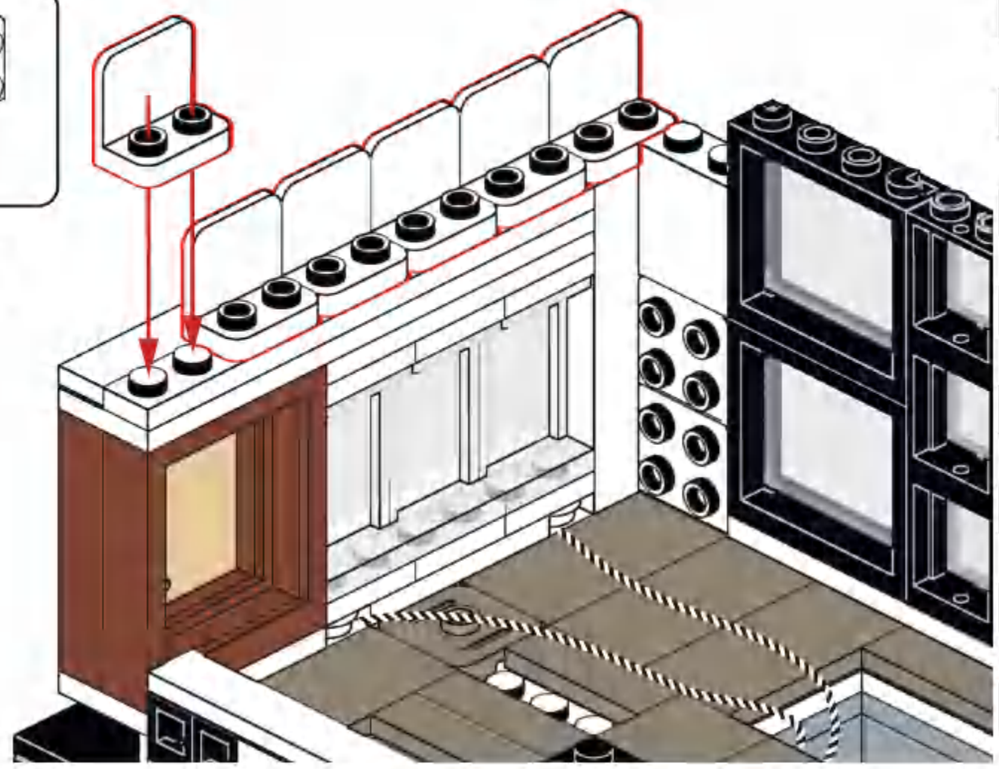

1x 1x

B32

1X8

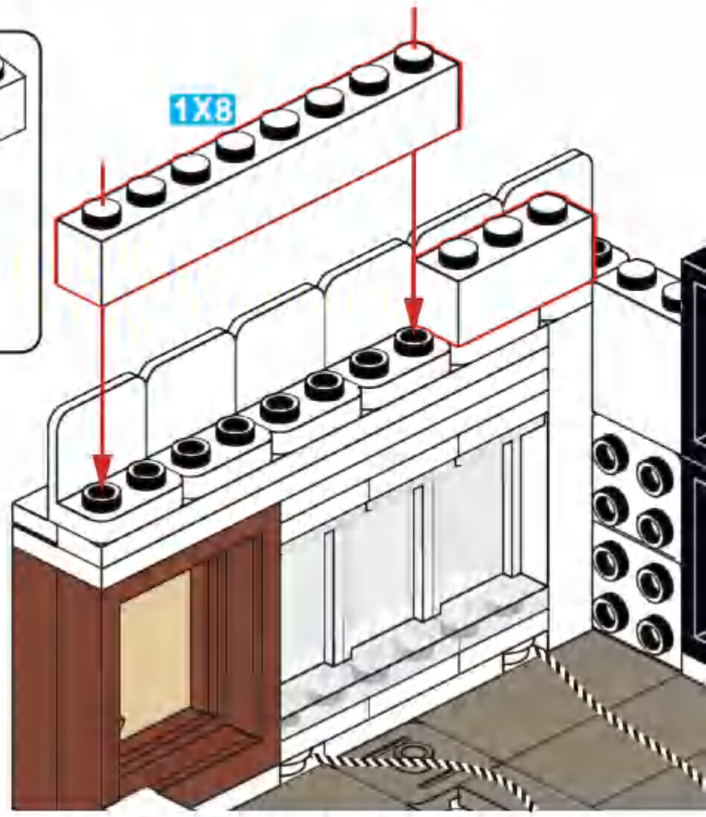

1x 1x 1x

B33

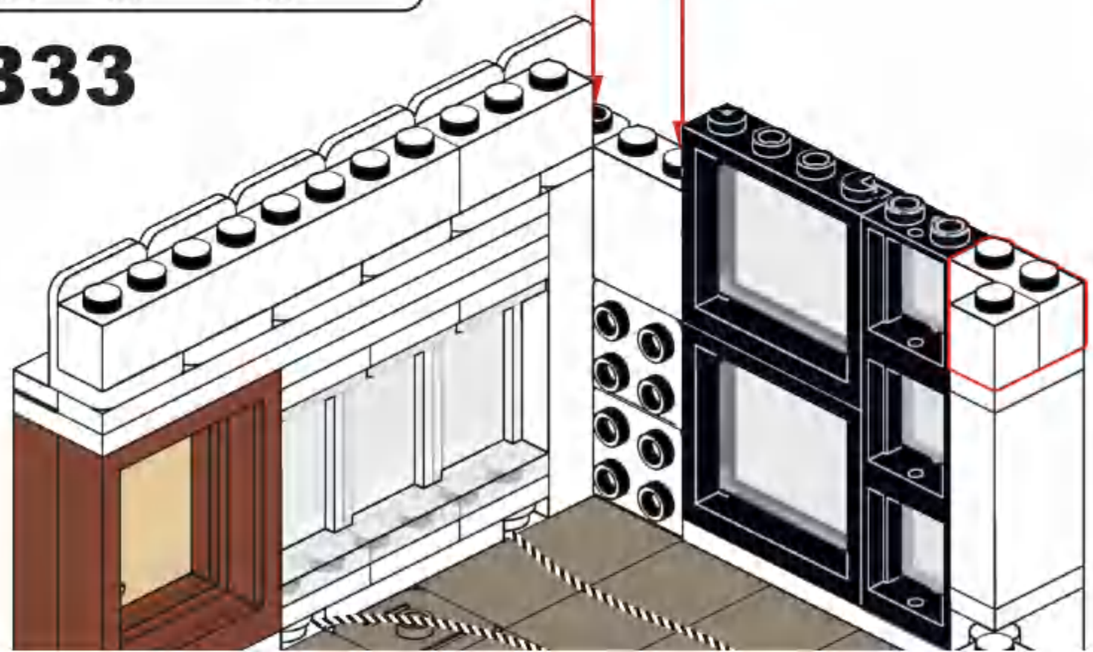

1x

1X10

1x 1x

1X8

B34

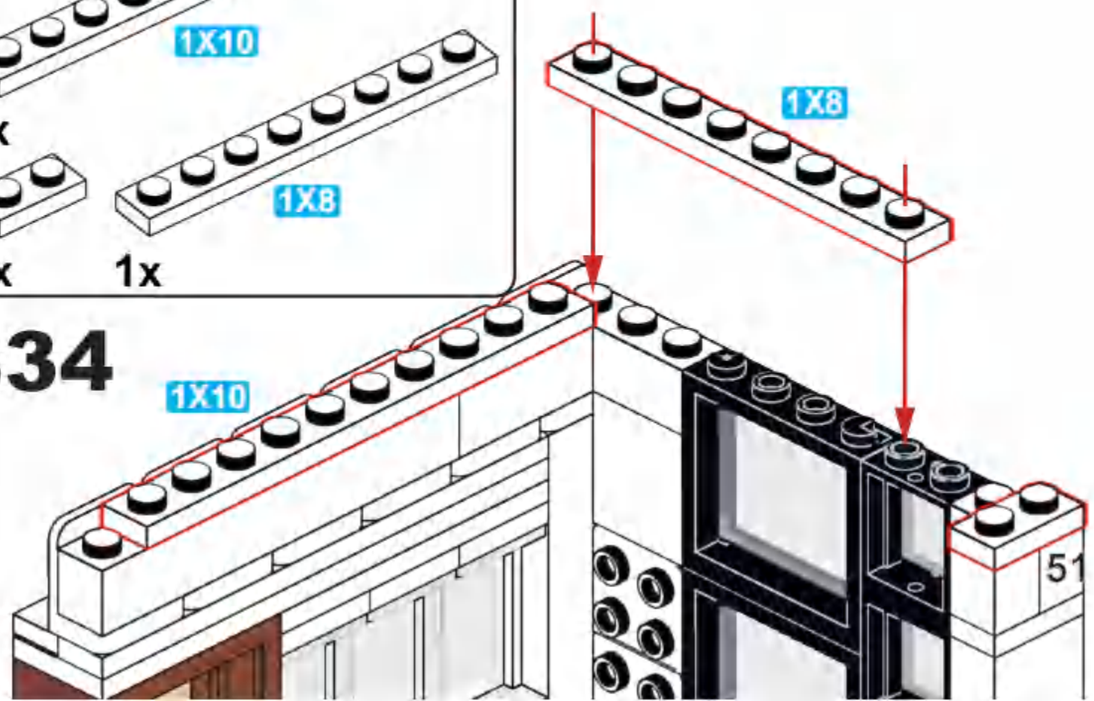

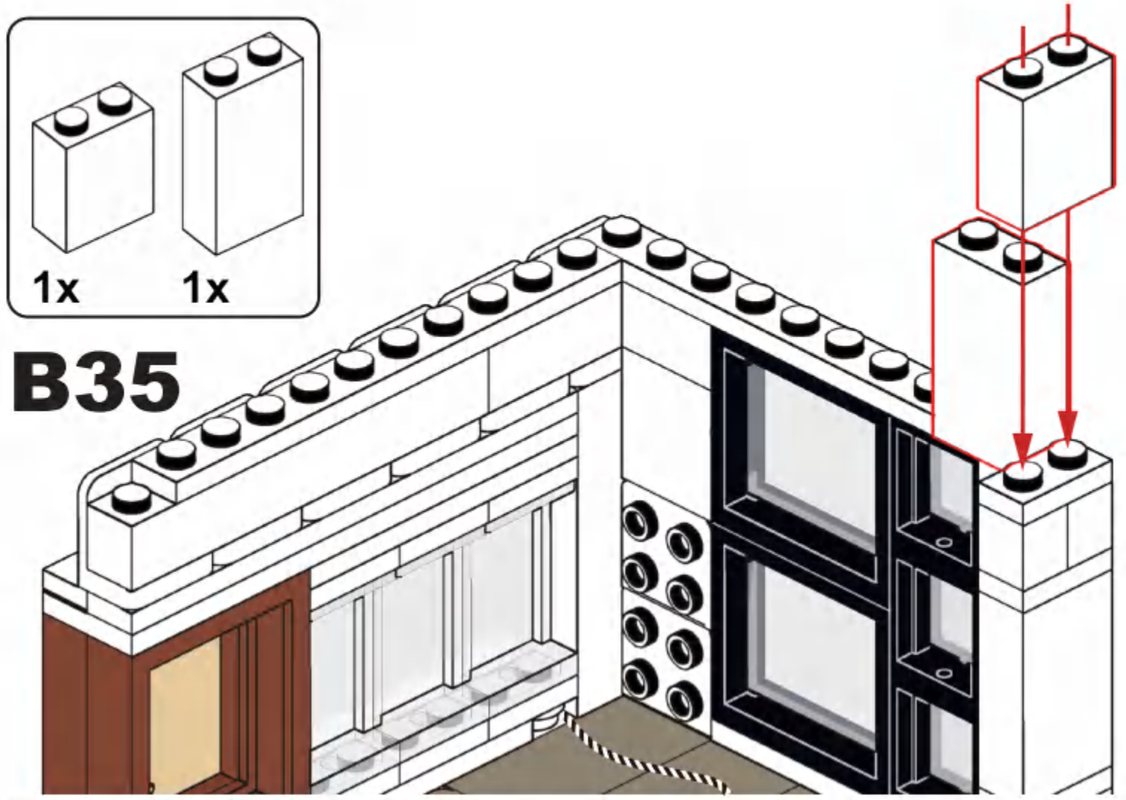

B35

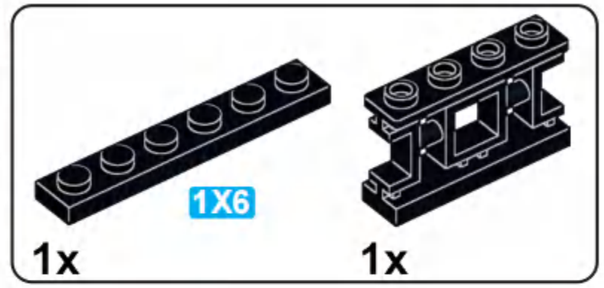

B36

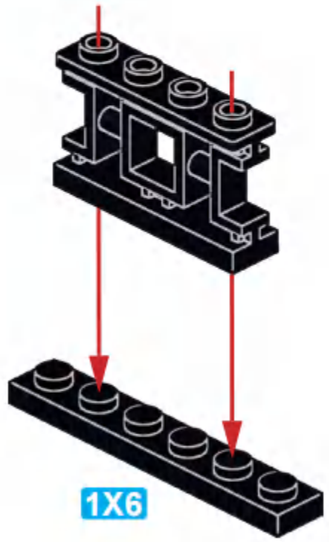

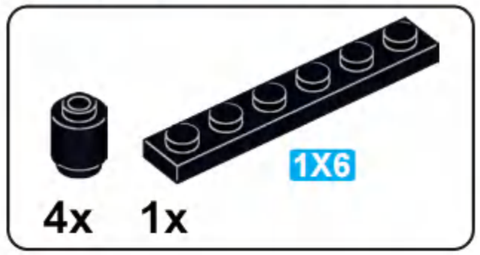

B37

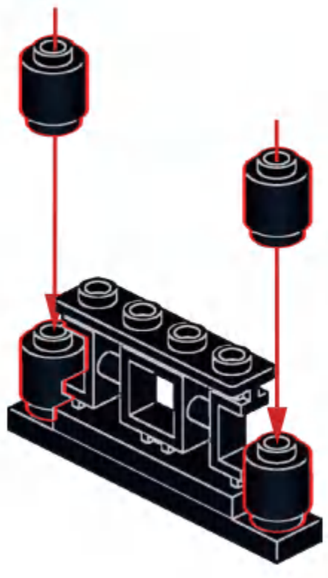

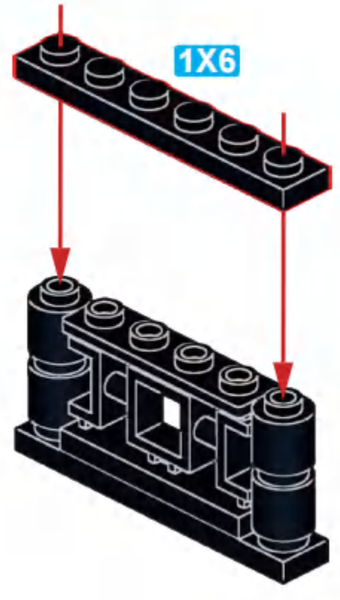

B38

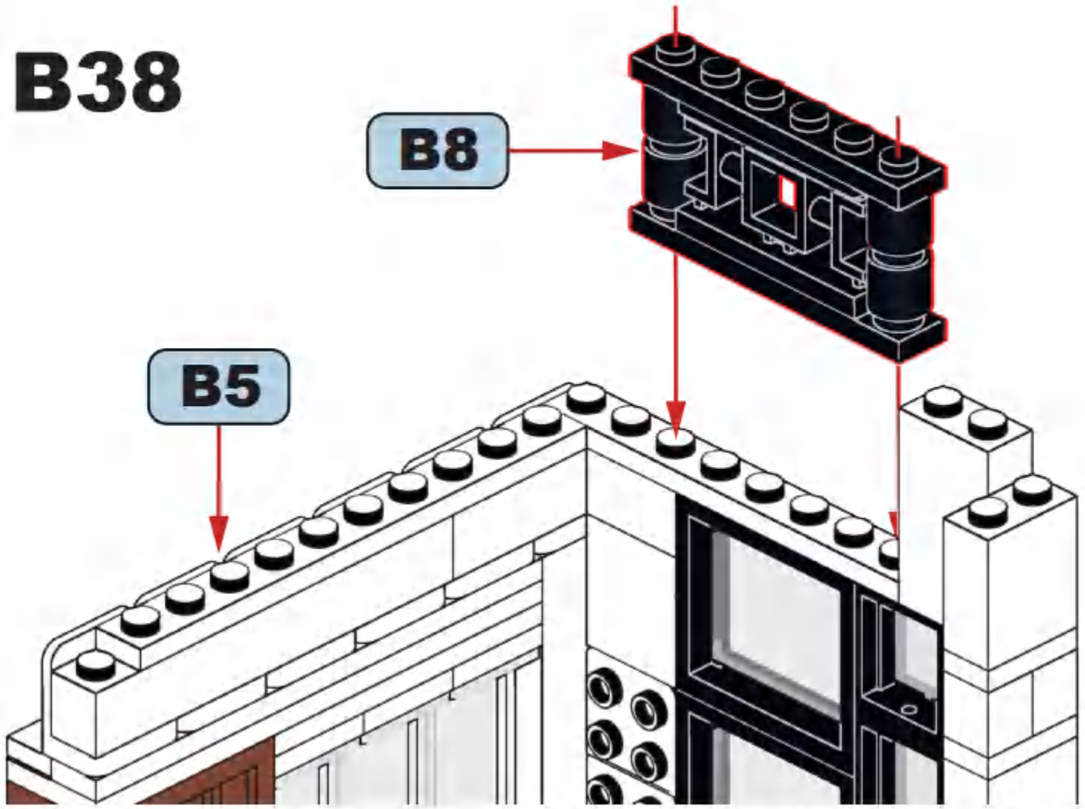

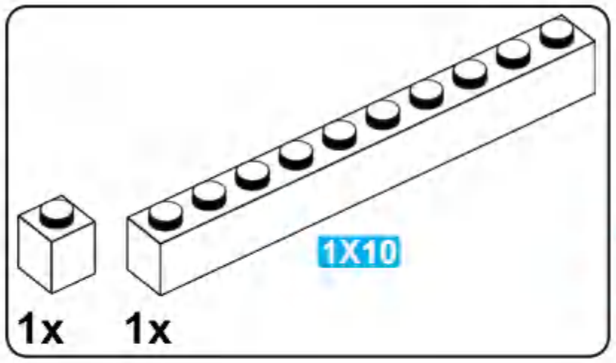

B39

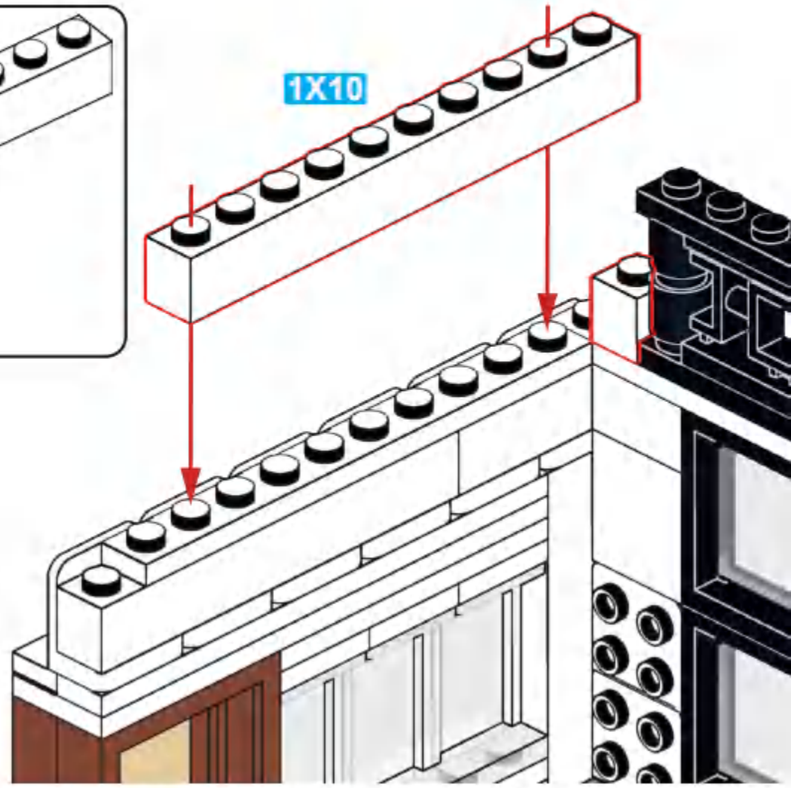

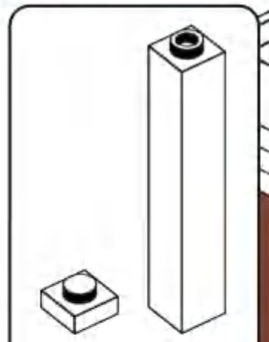

B40

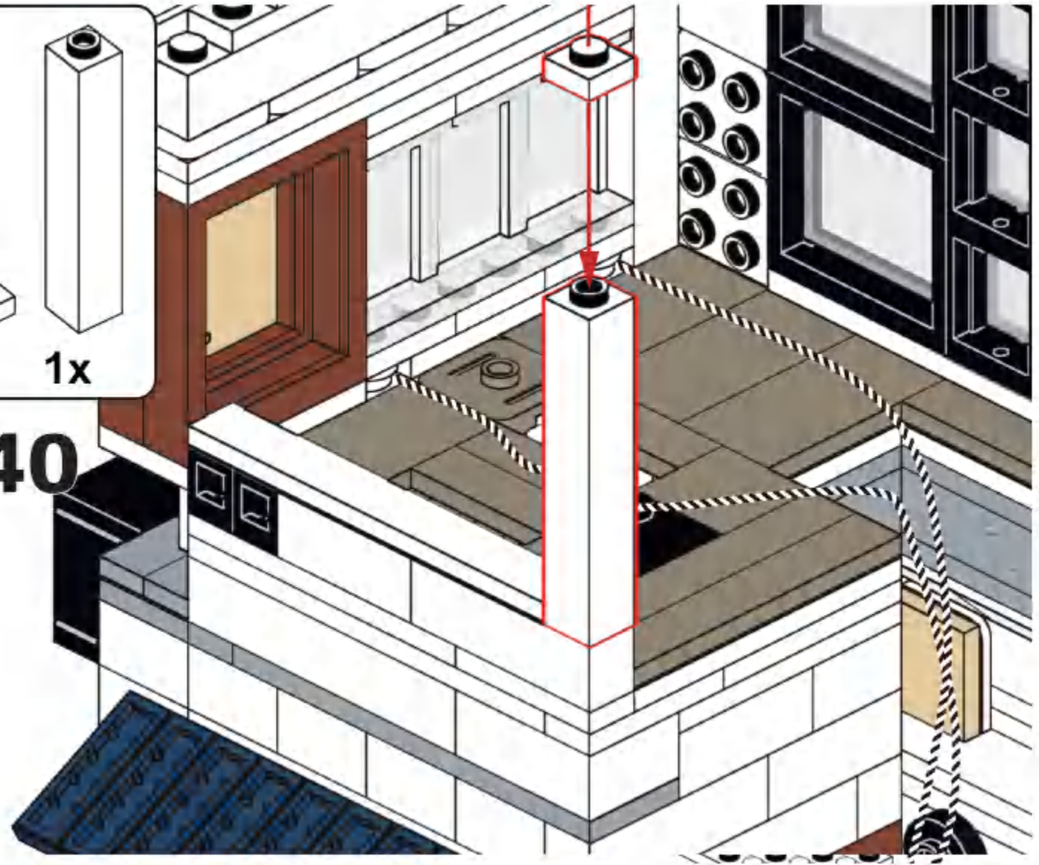

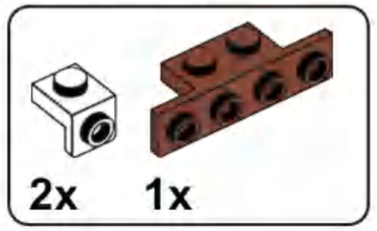

B41

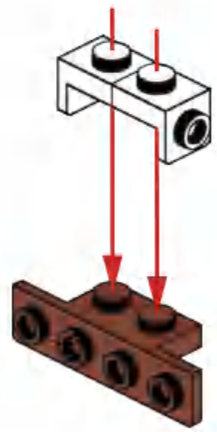

2x

B42

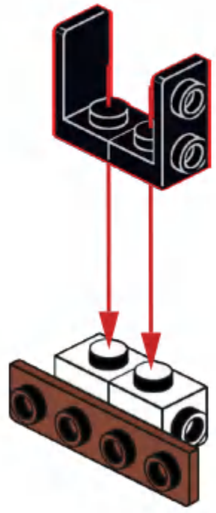

1x 1x 1x

B43

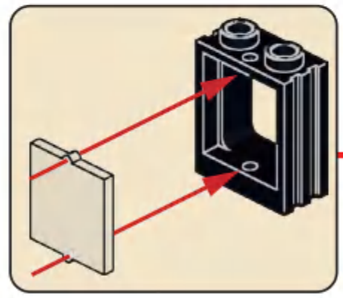

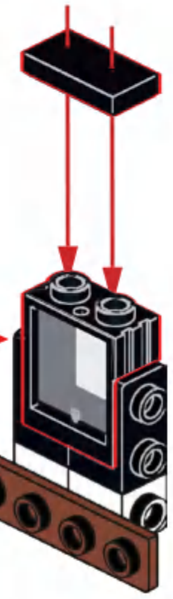

1x 2x 2x

B44

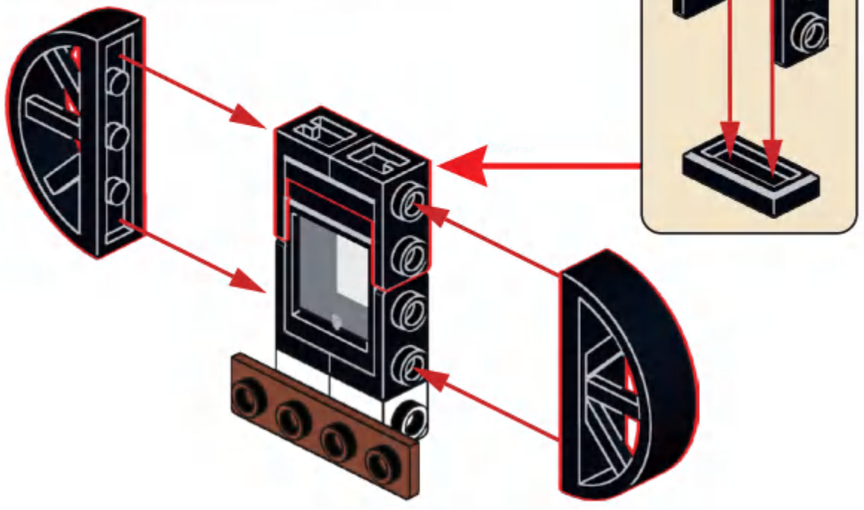

2x

B45

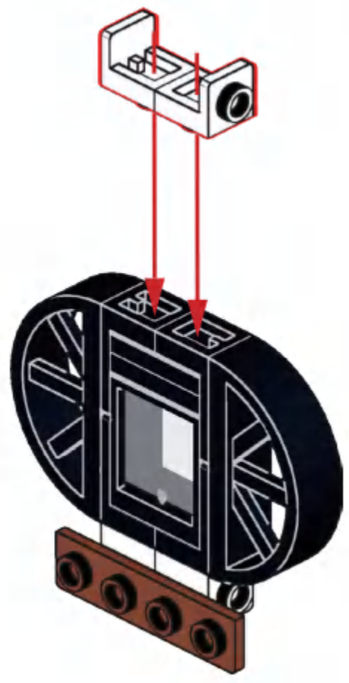

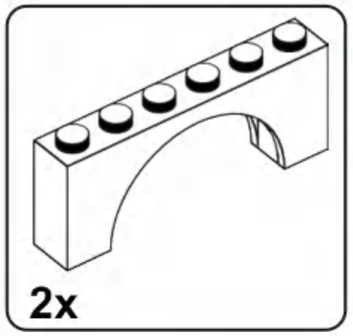

B46

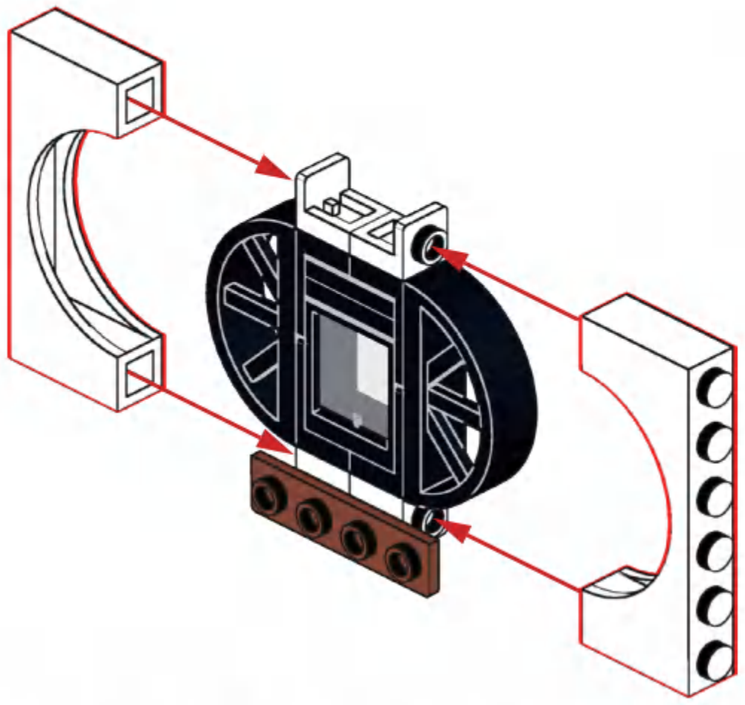

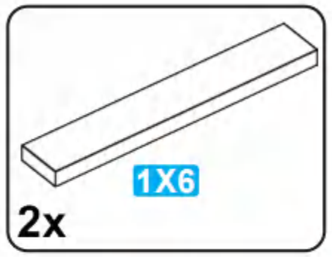

B47

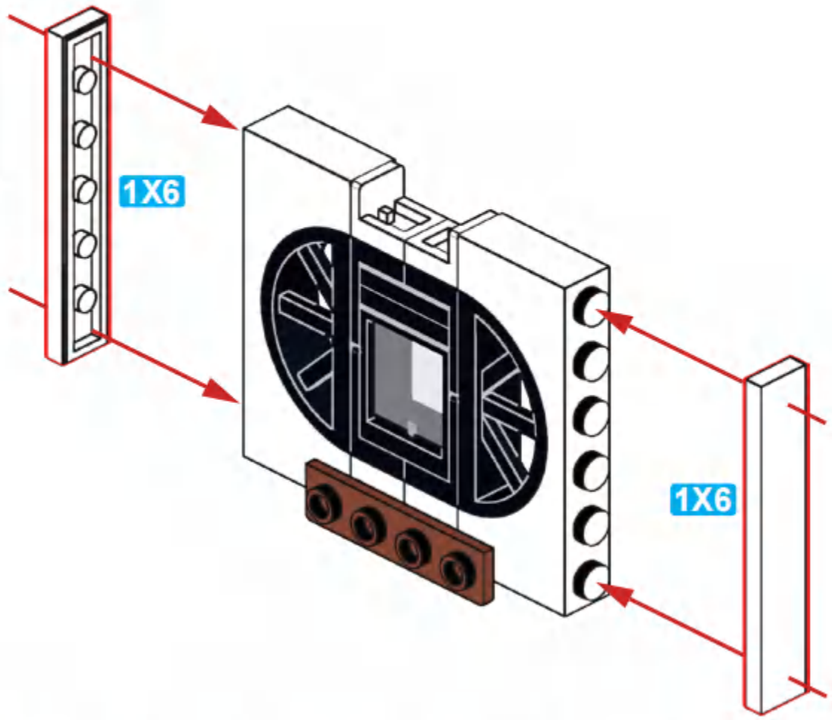

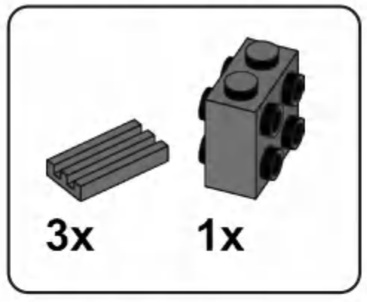

B48

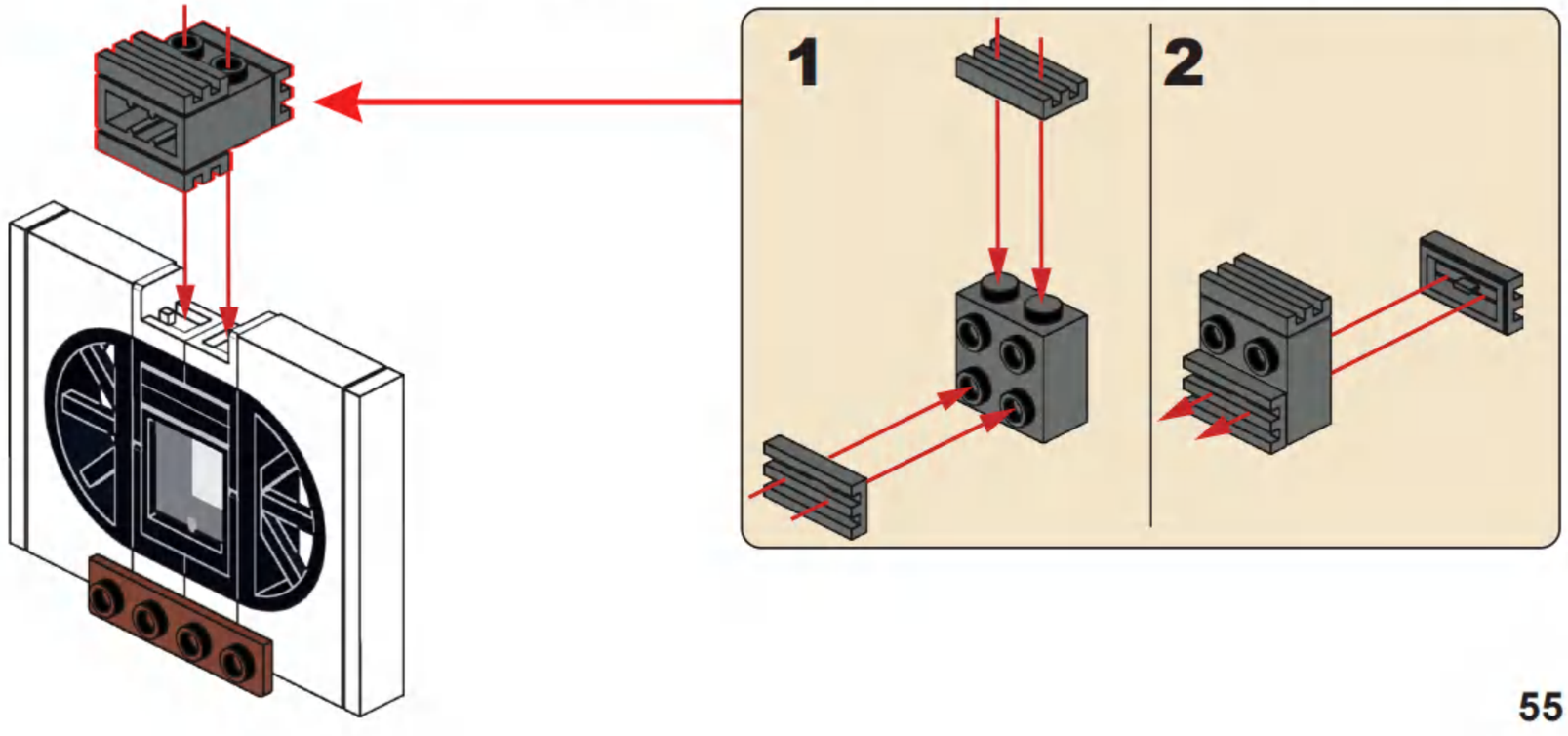

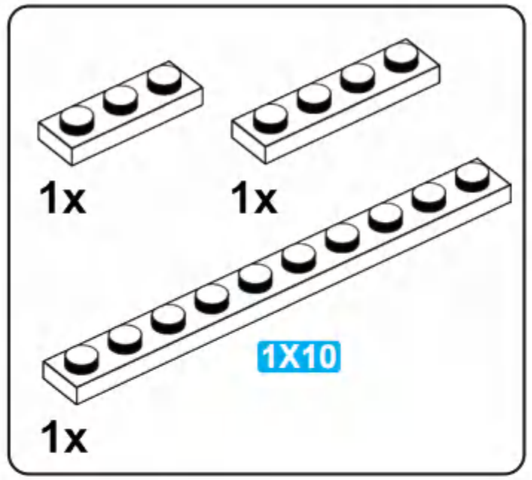

B49

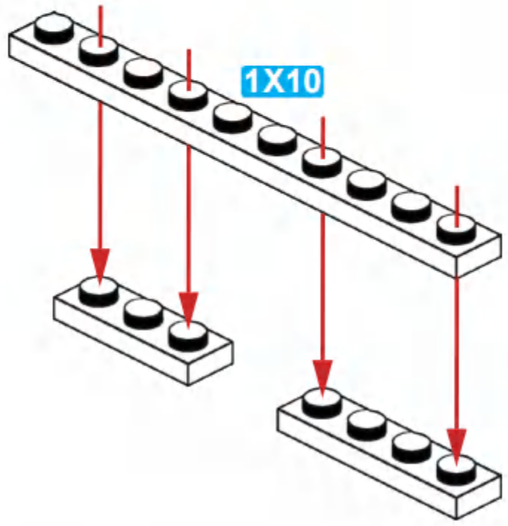

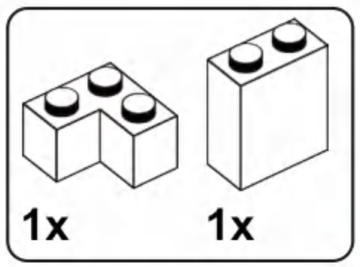

B50

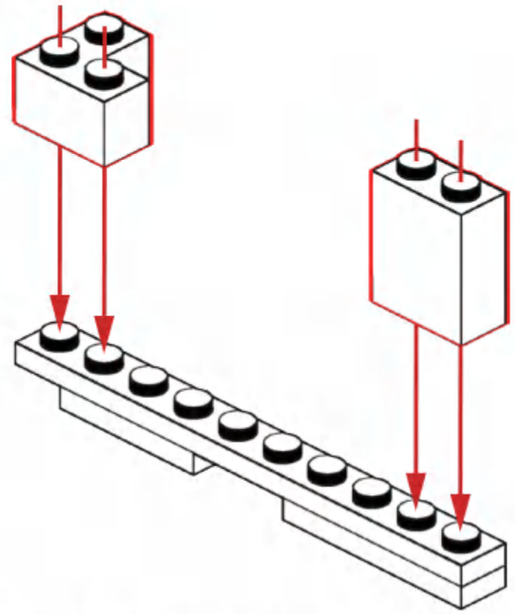

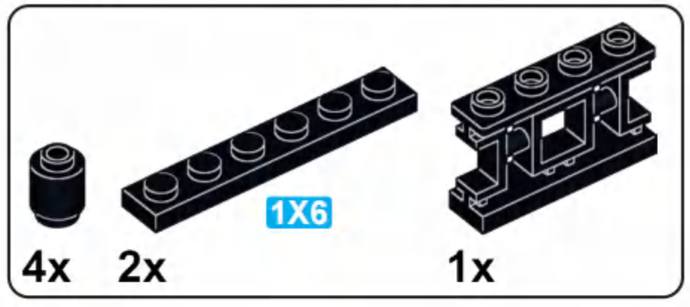

B51

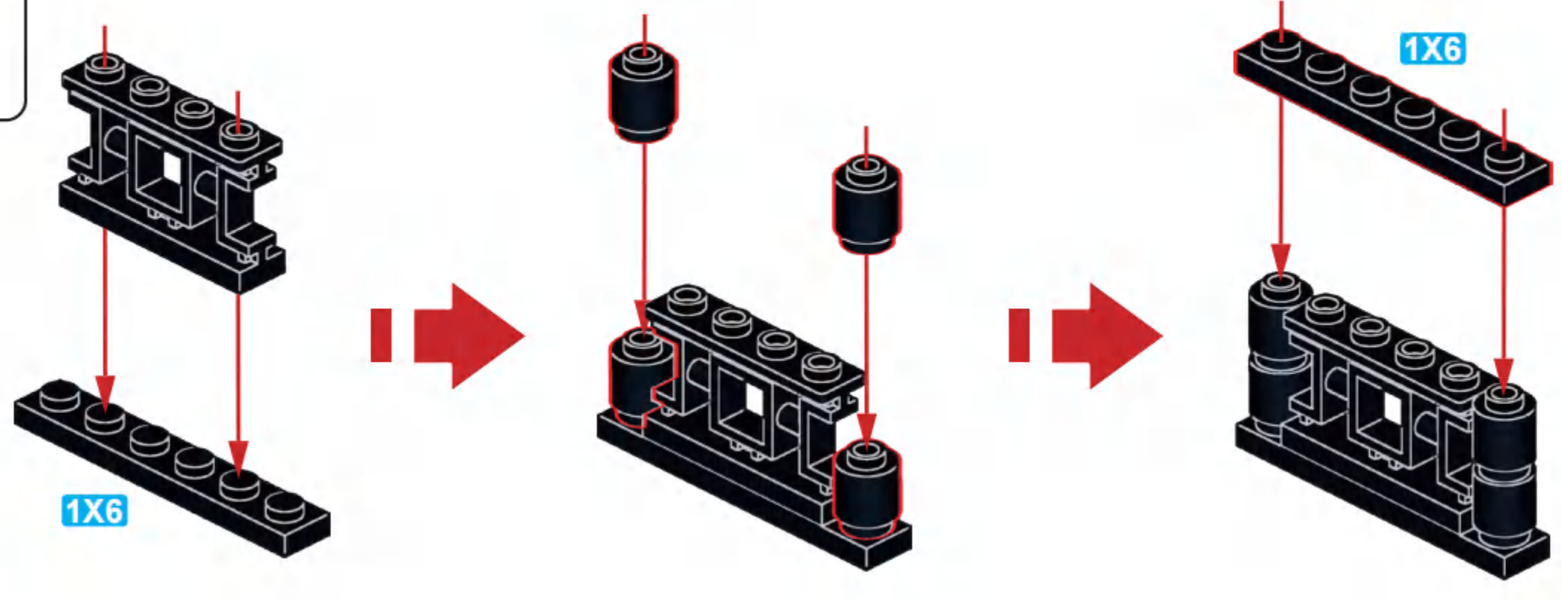

B52

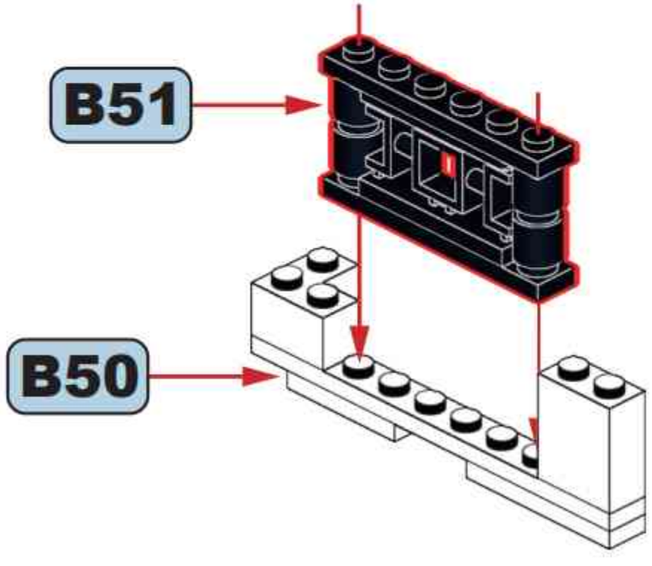

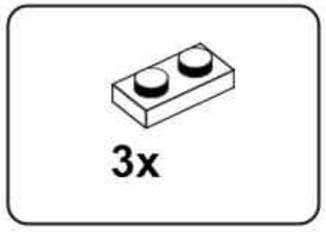

B53

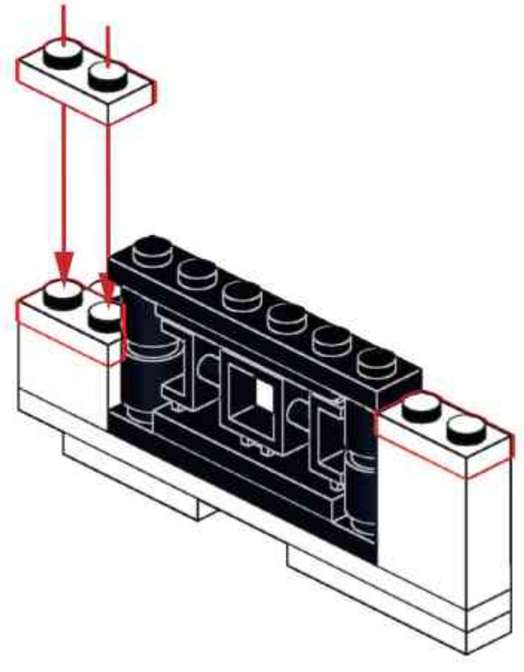

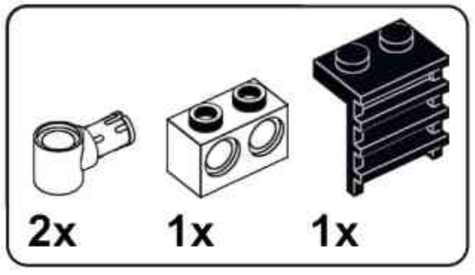

B54

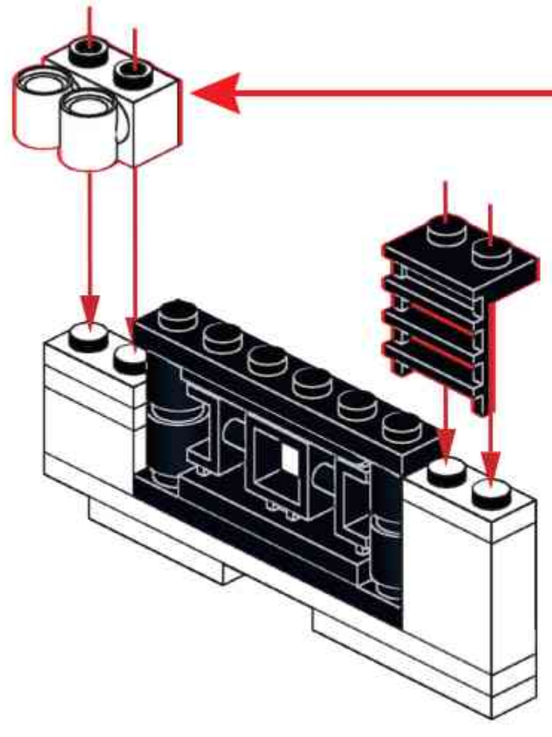

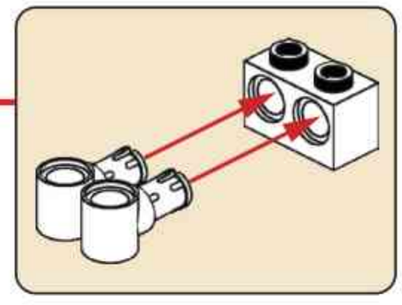

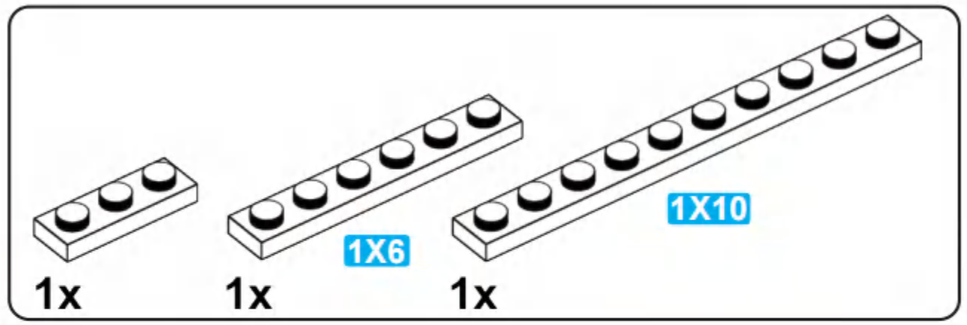

B55

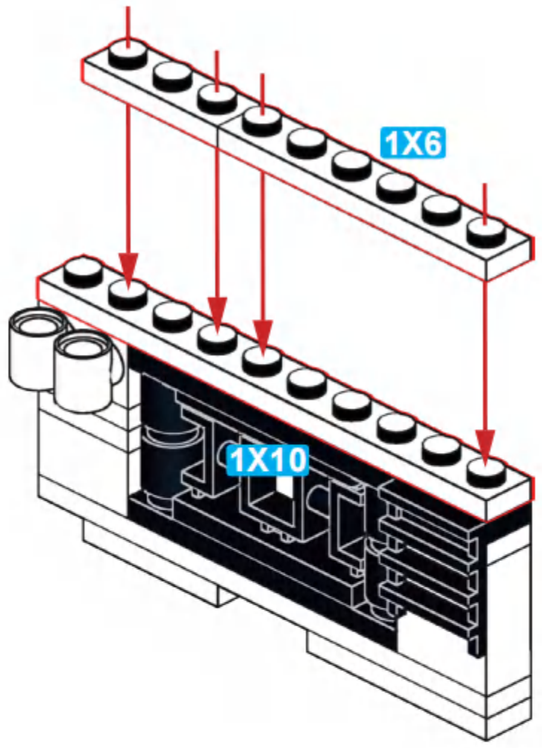

B56

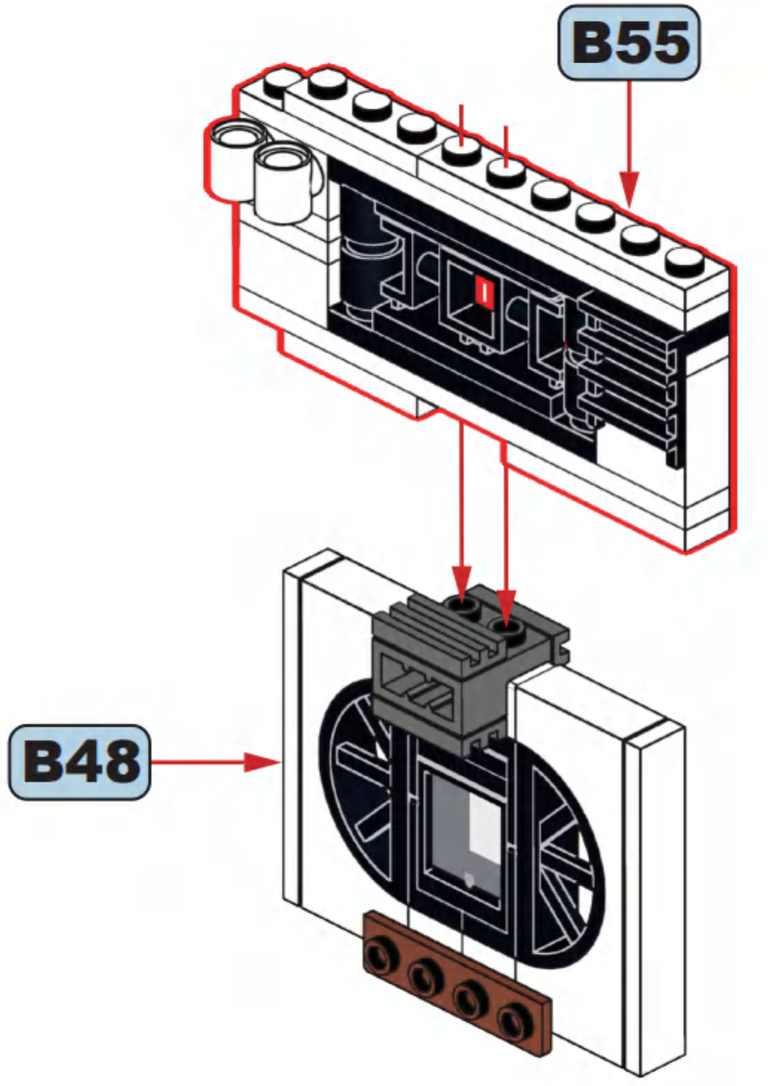

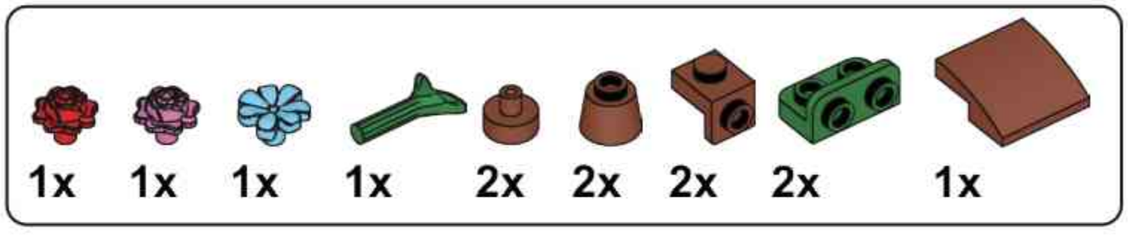

B57

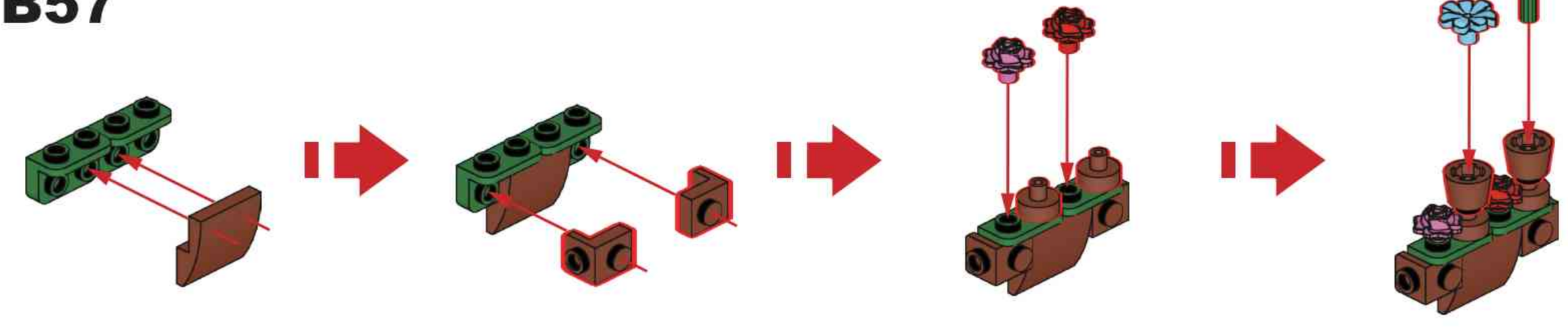

B58

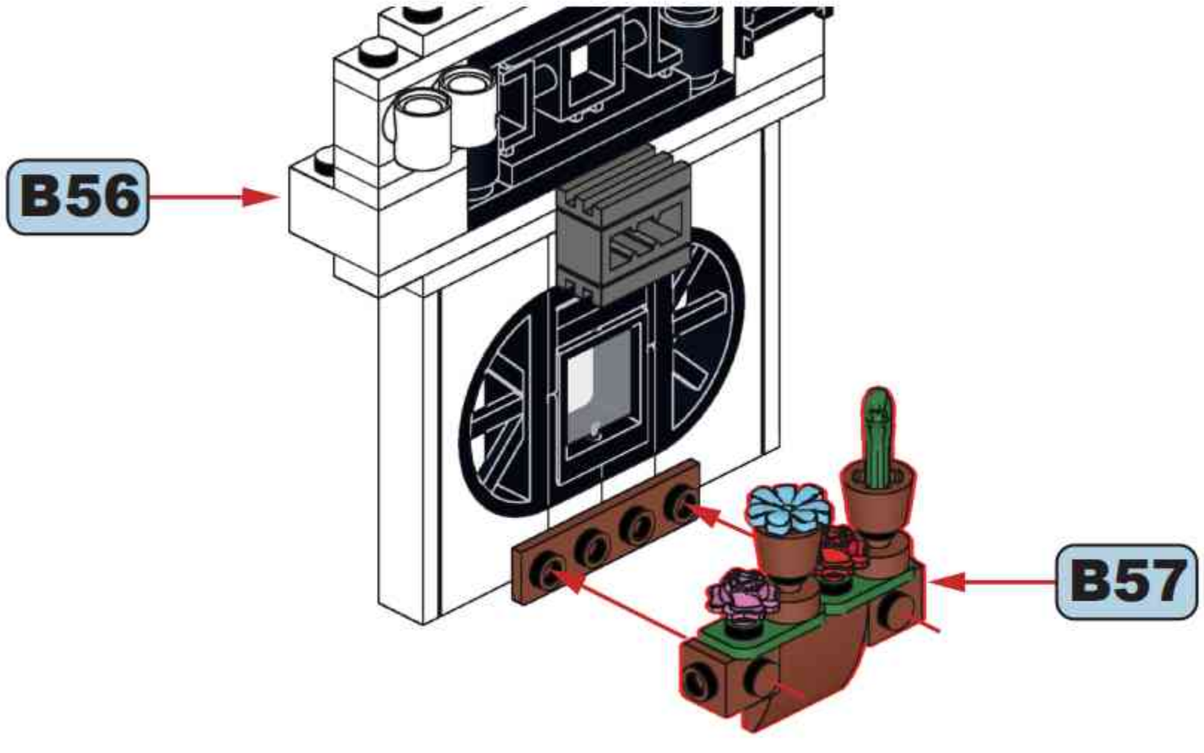

B59

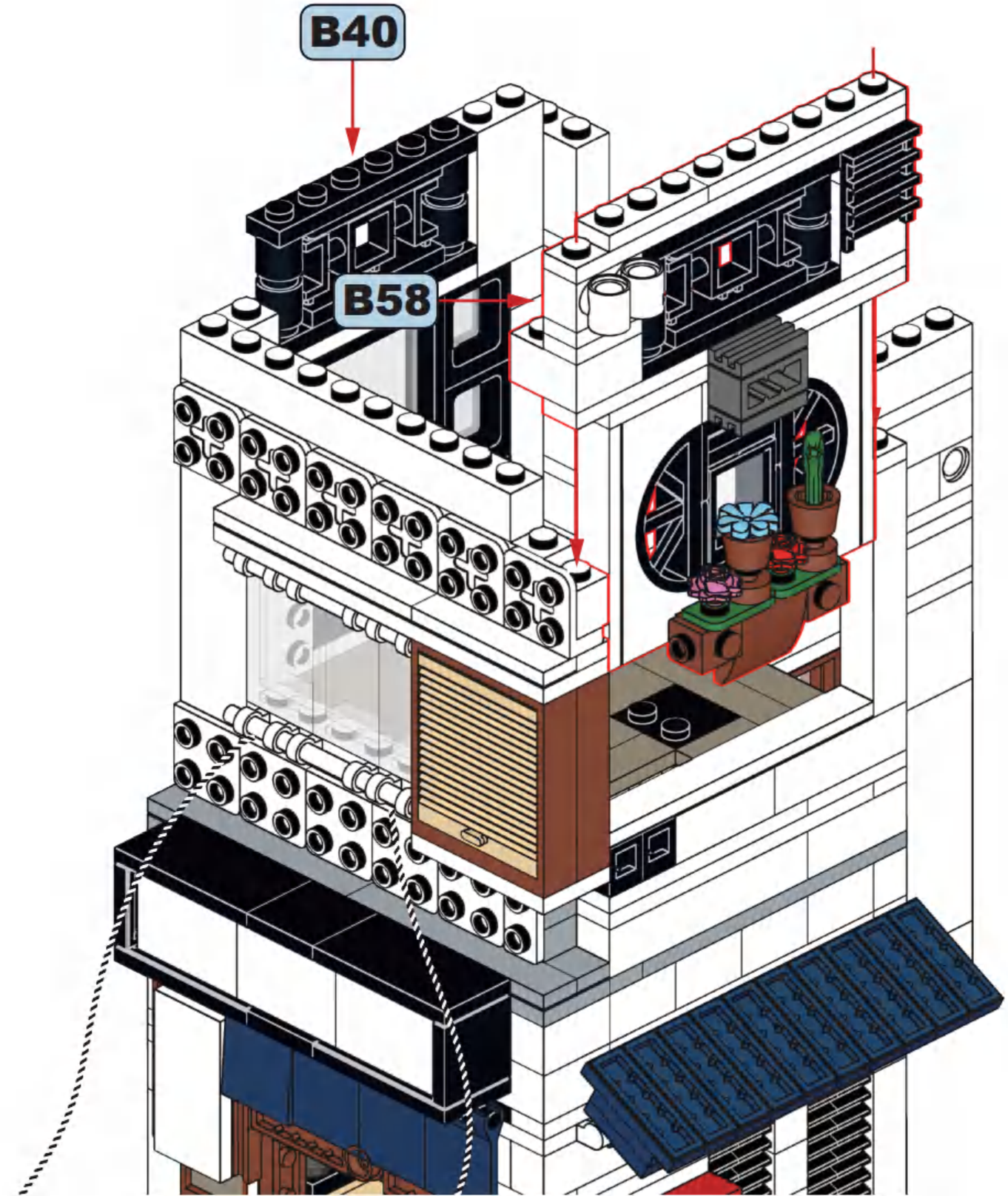

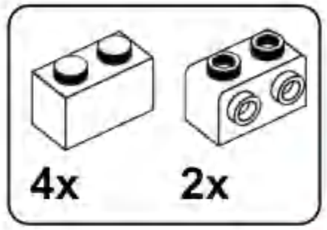

B60

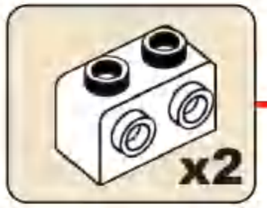

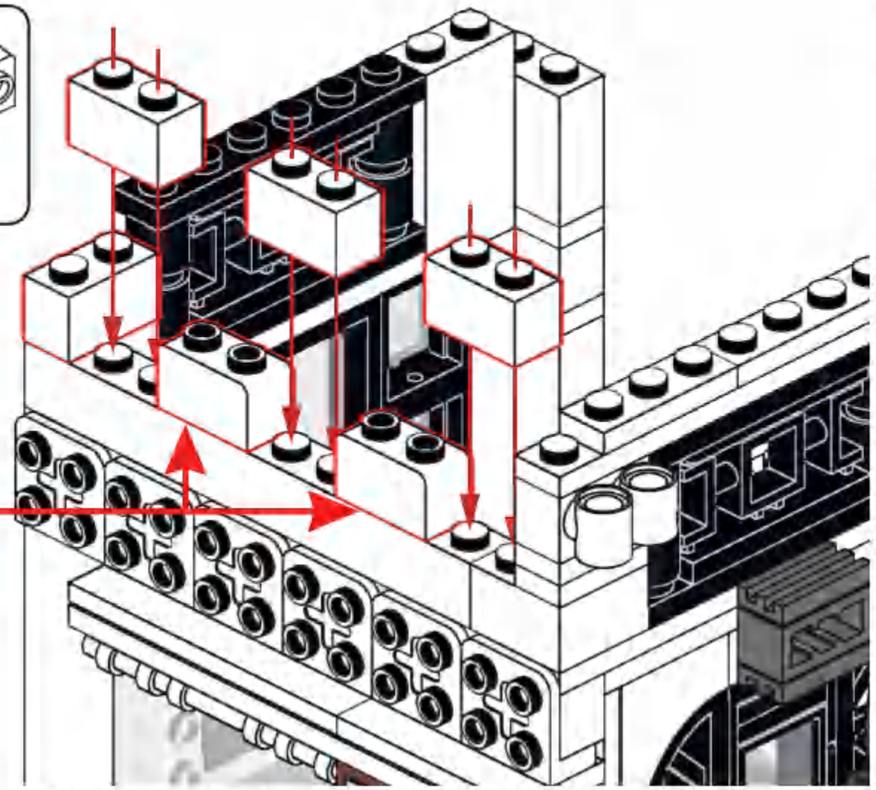

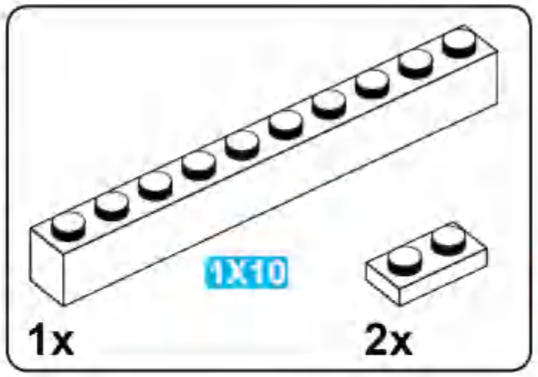

B61

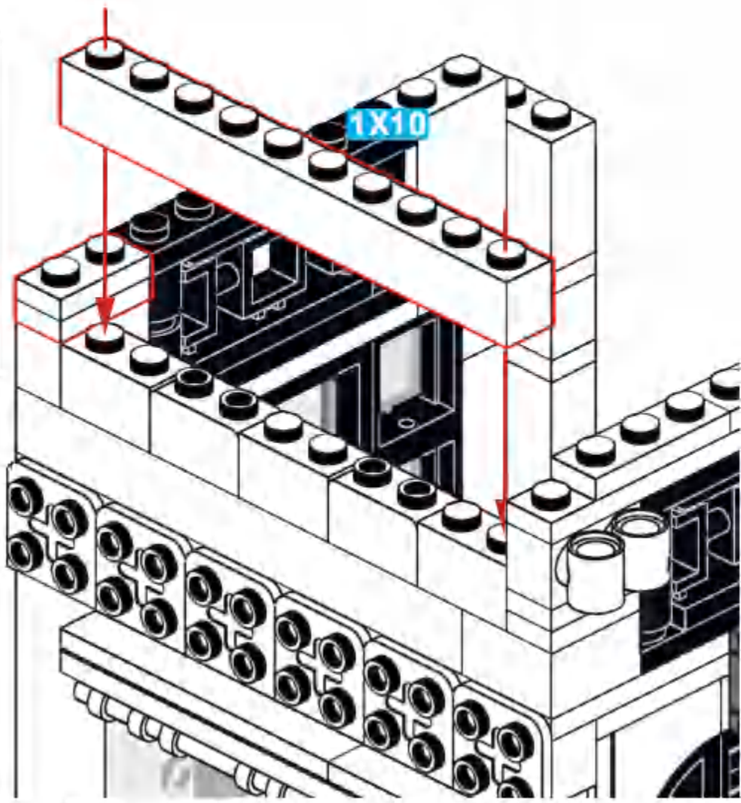

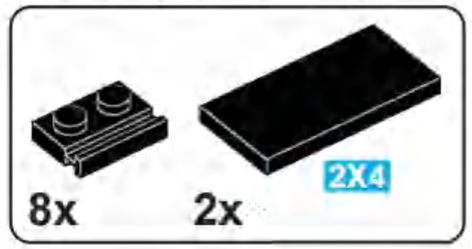

B62

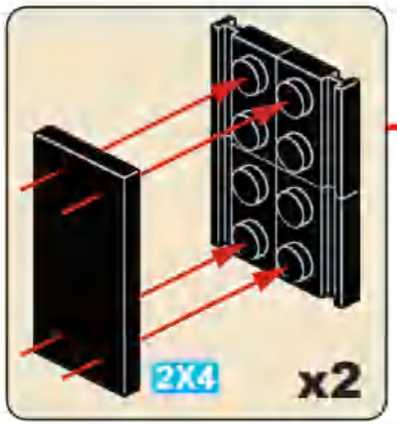

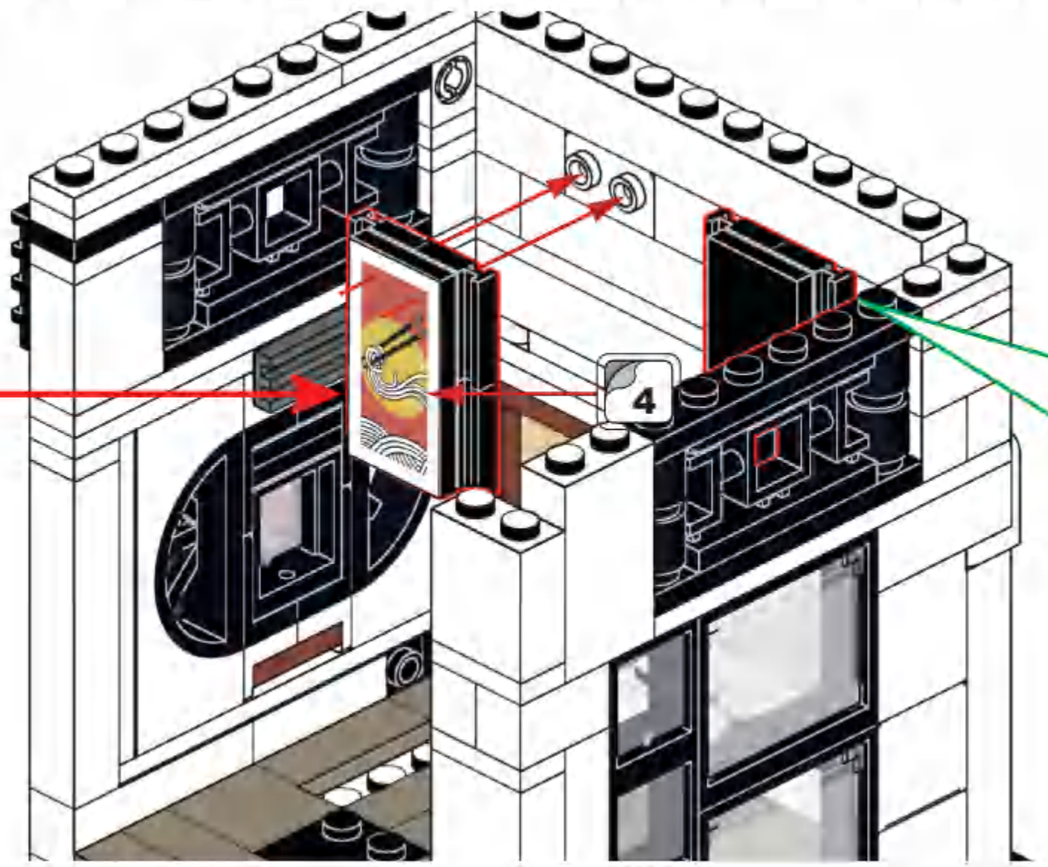

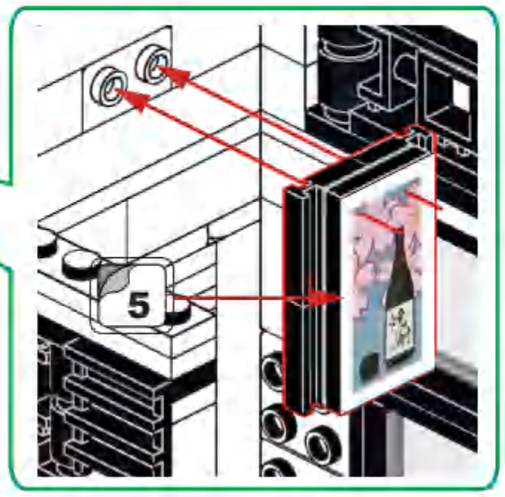

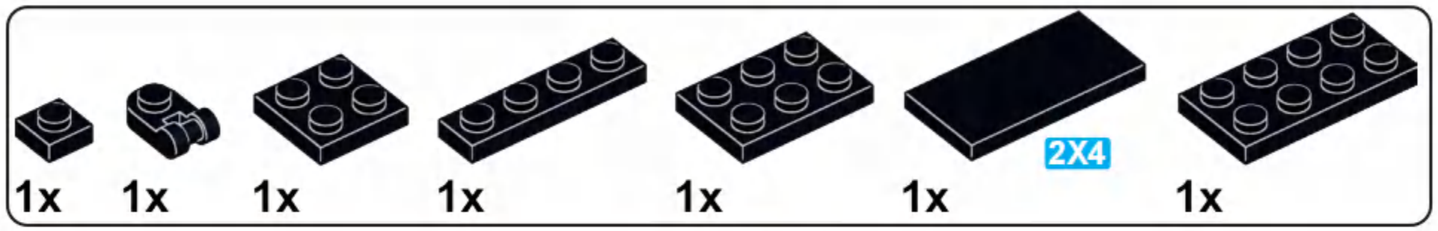

B63

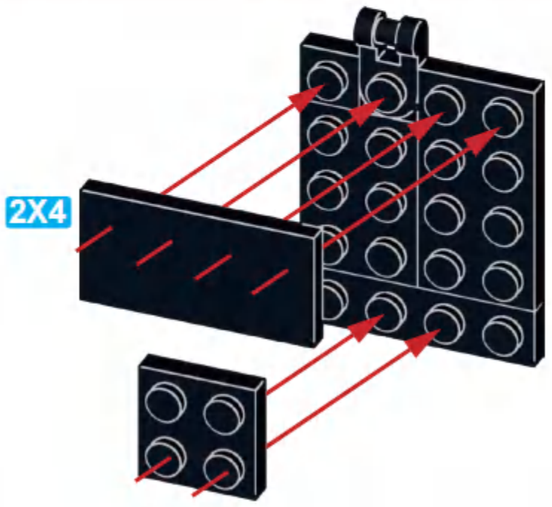

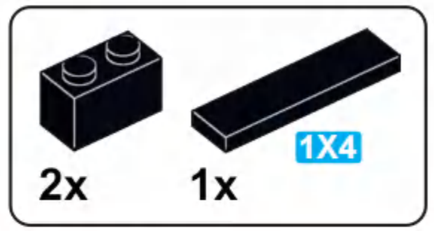

B64

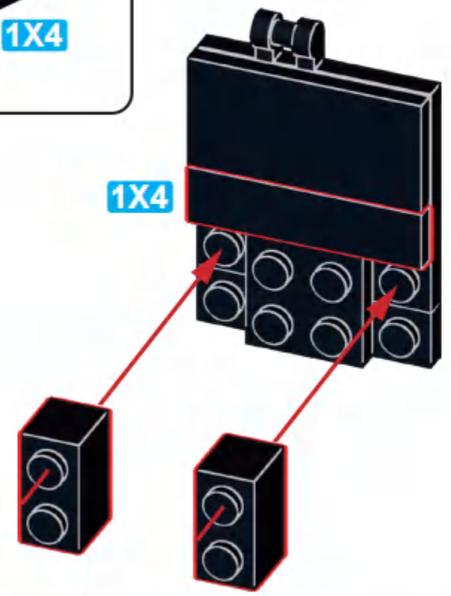

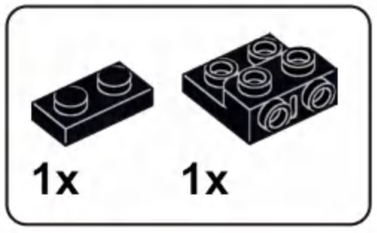

B65

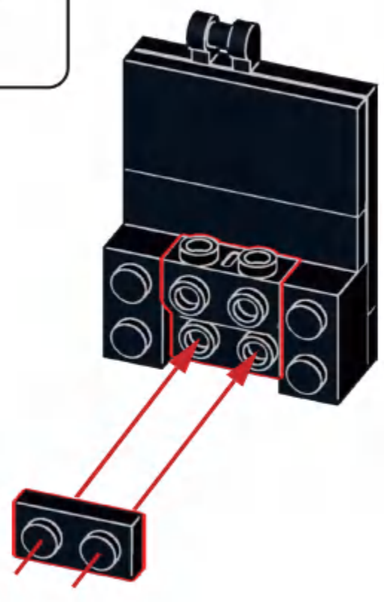

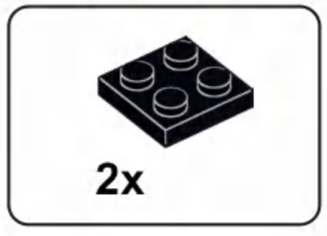

B66

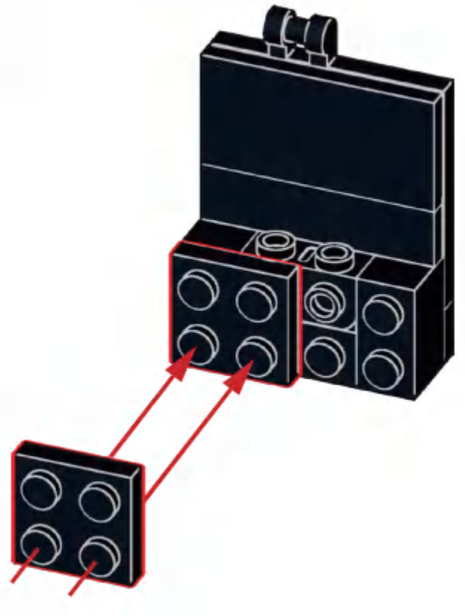

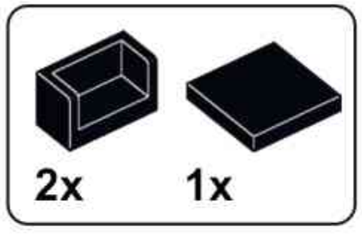

B67

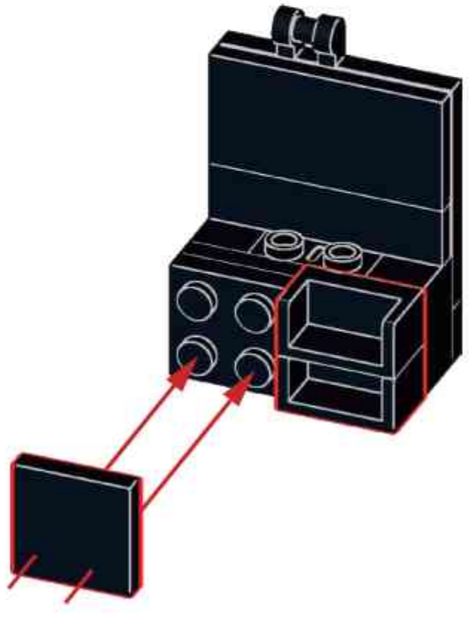

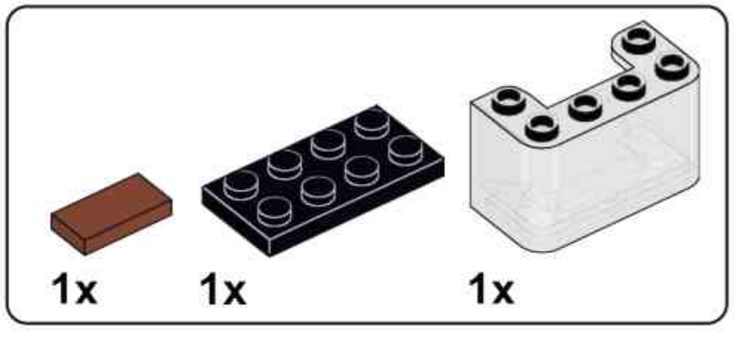

B68

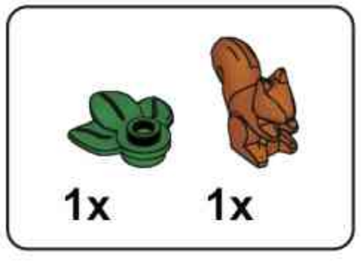

B69

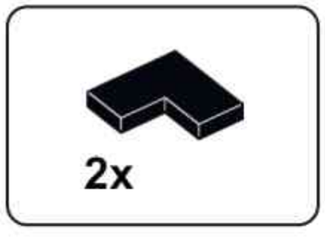

B70

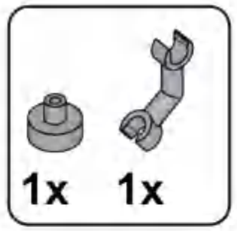

B71

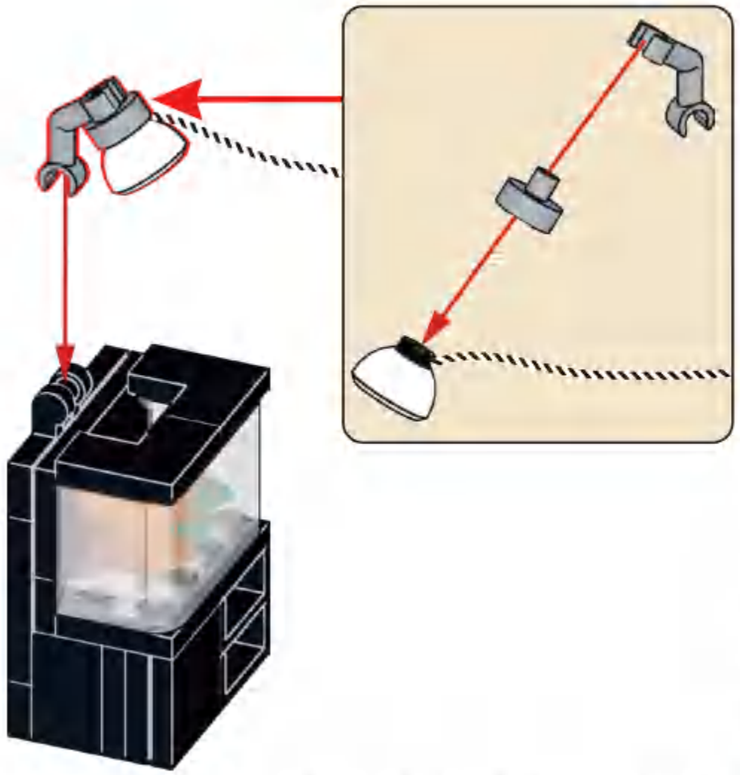

B72

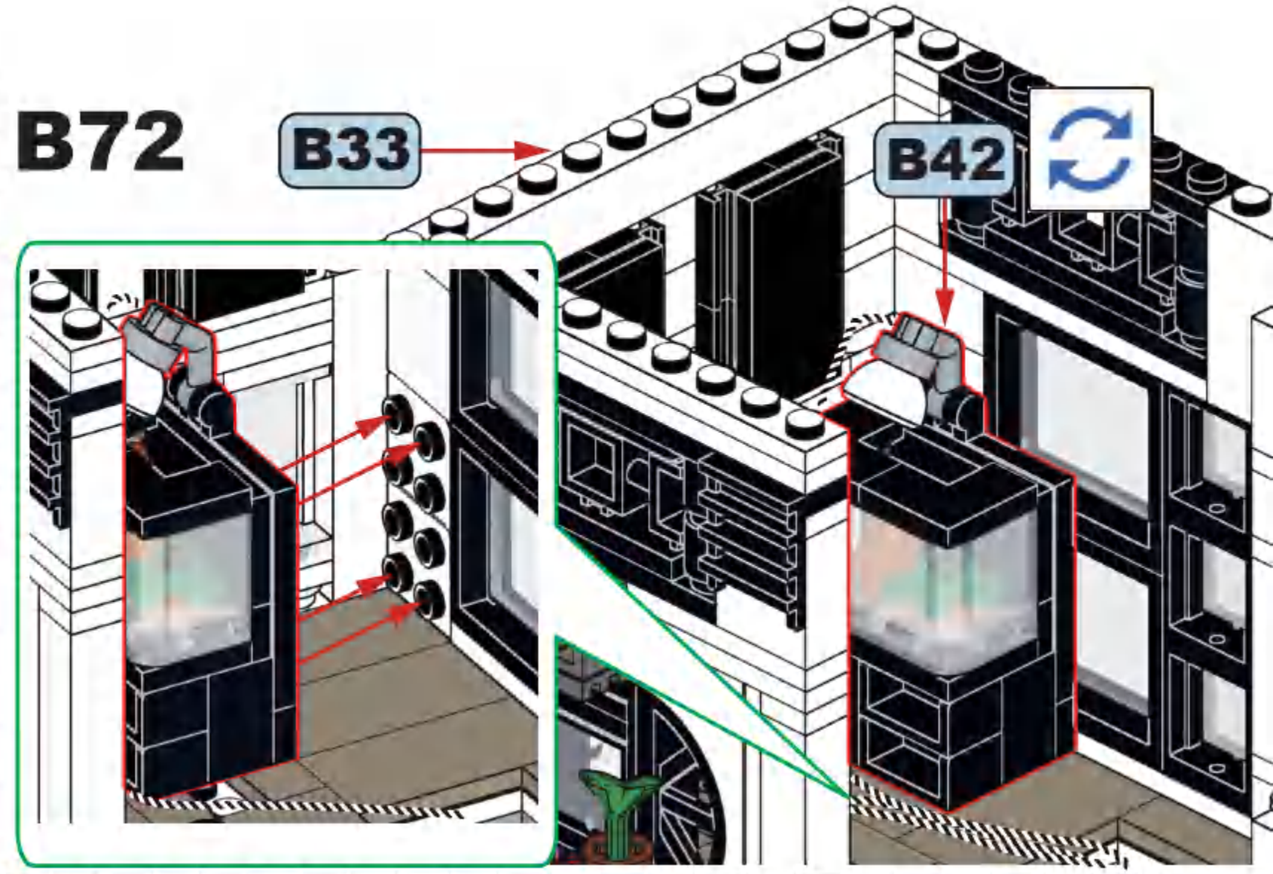

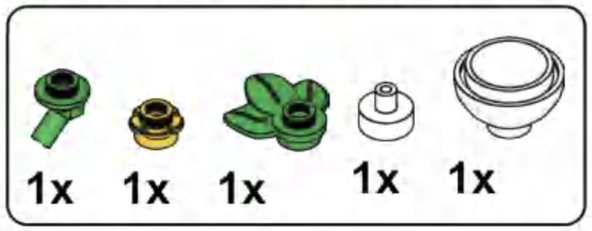

B73

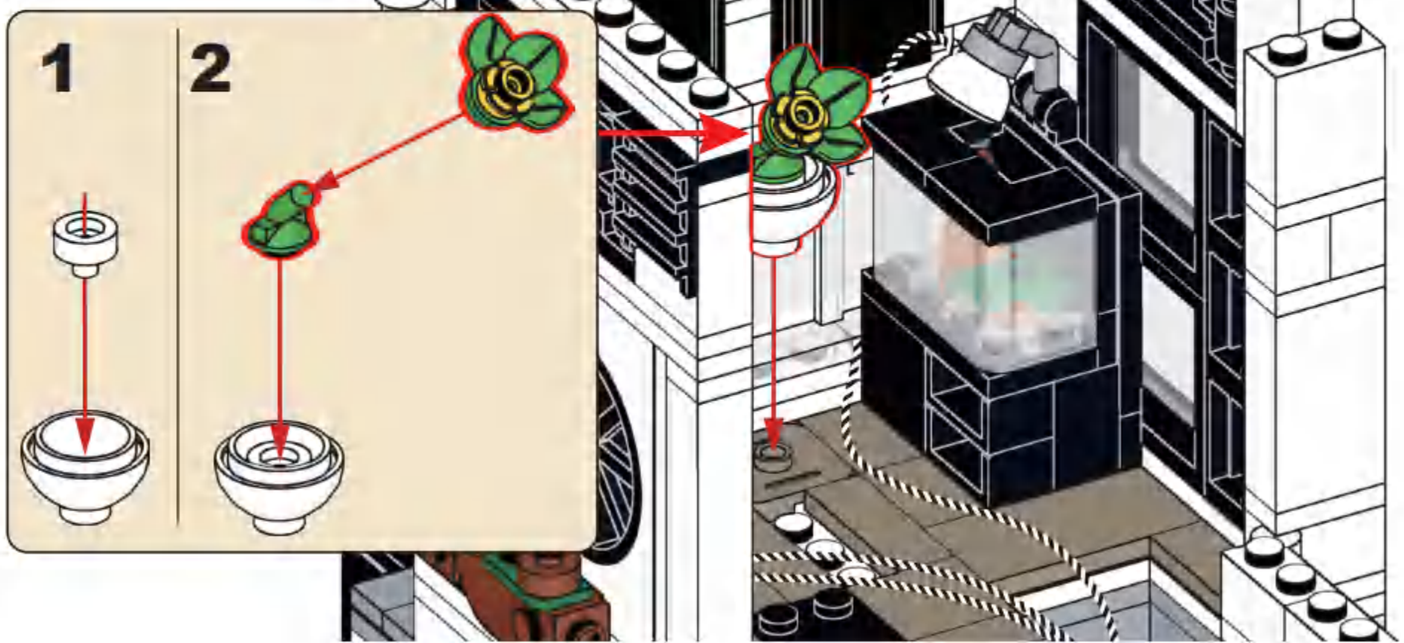

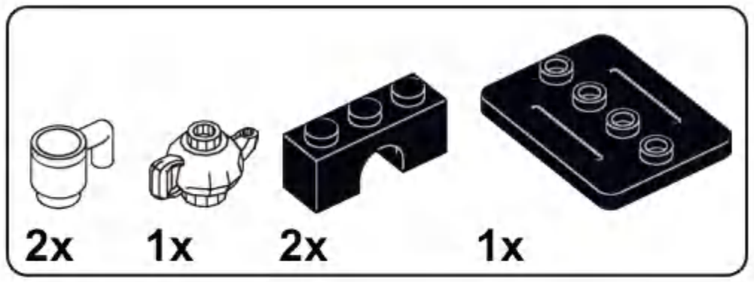

B74

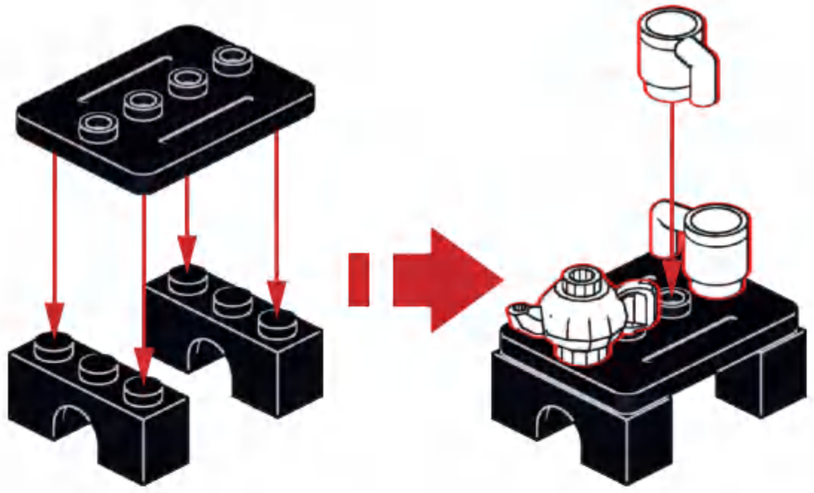

B75

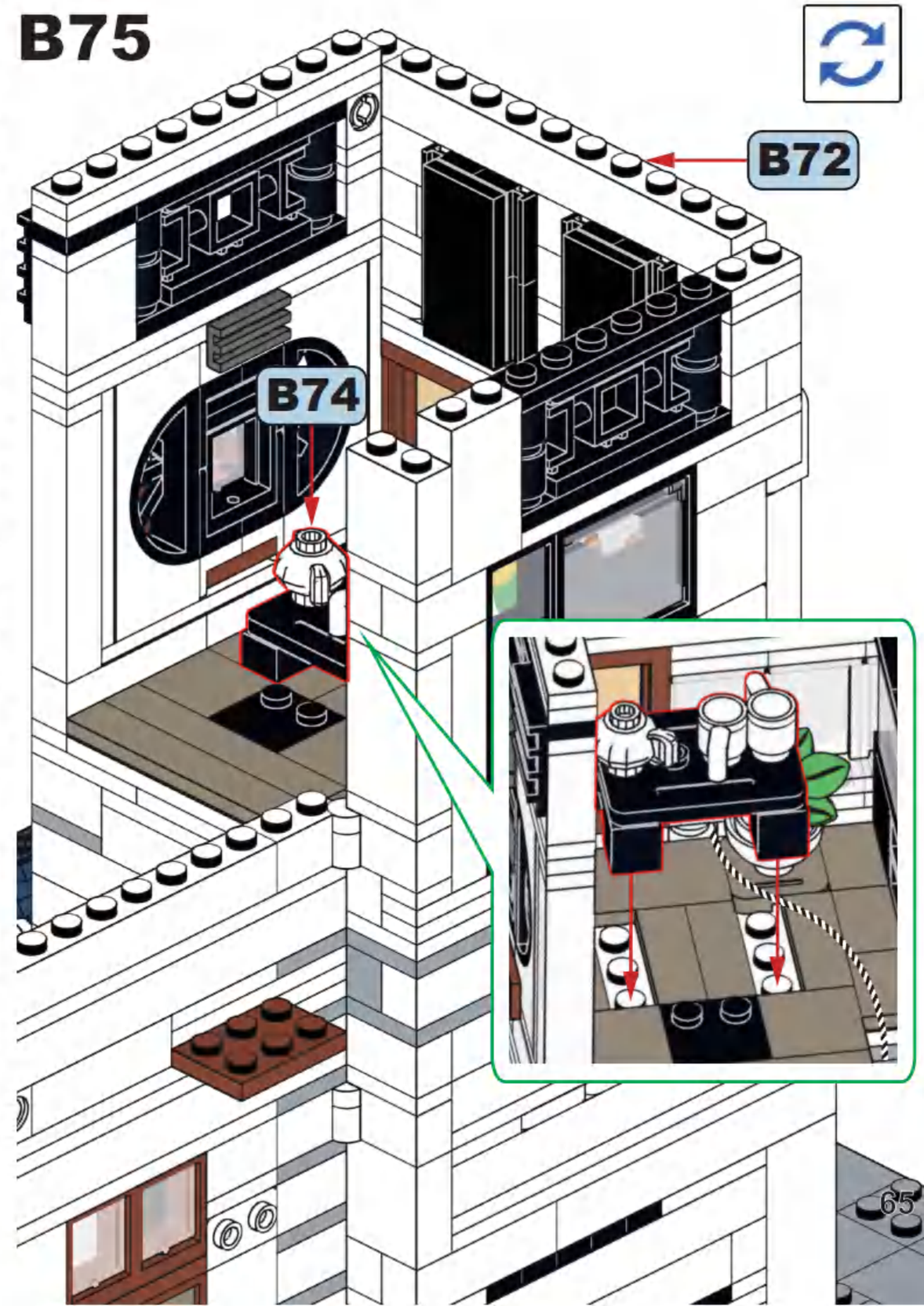

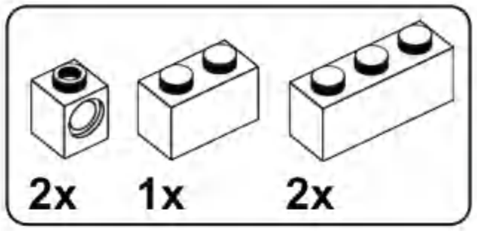

B76

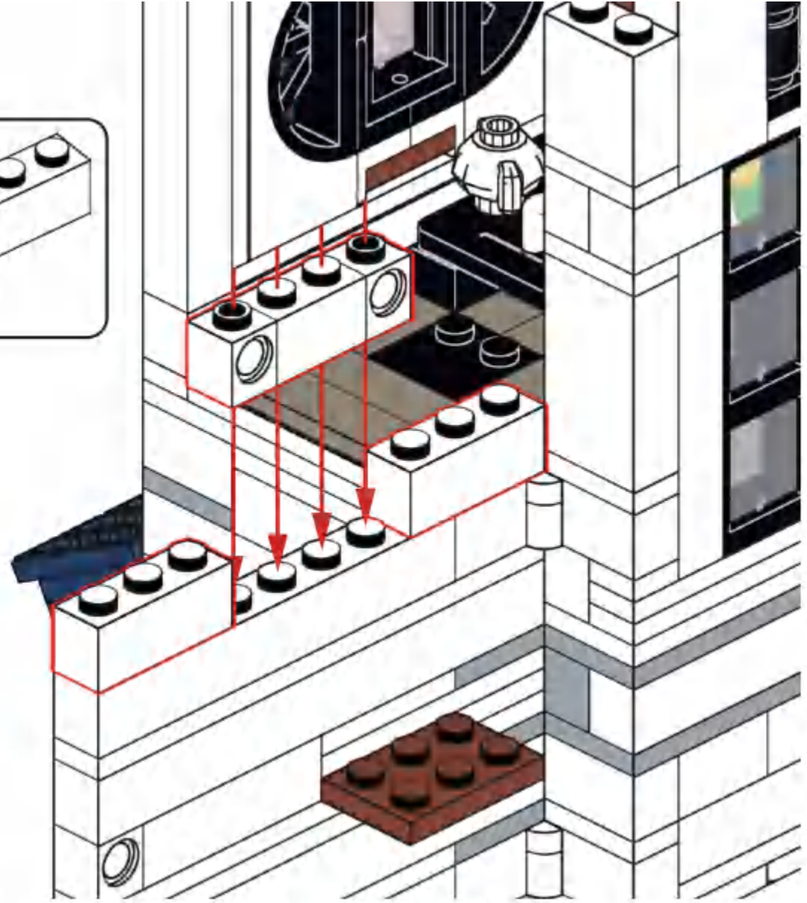

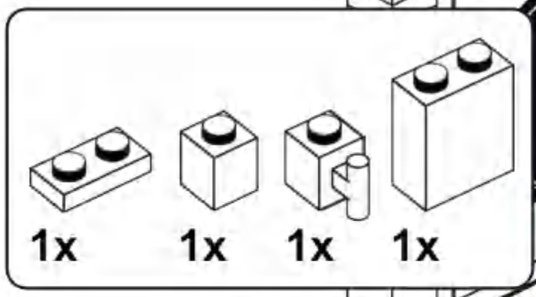

B77

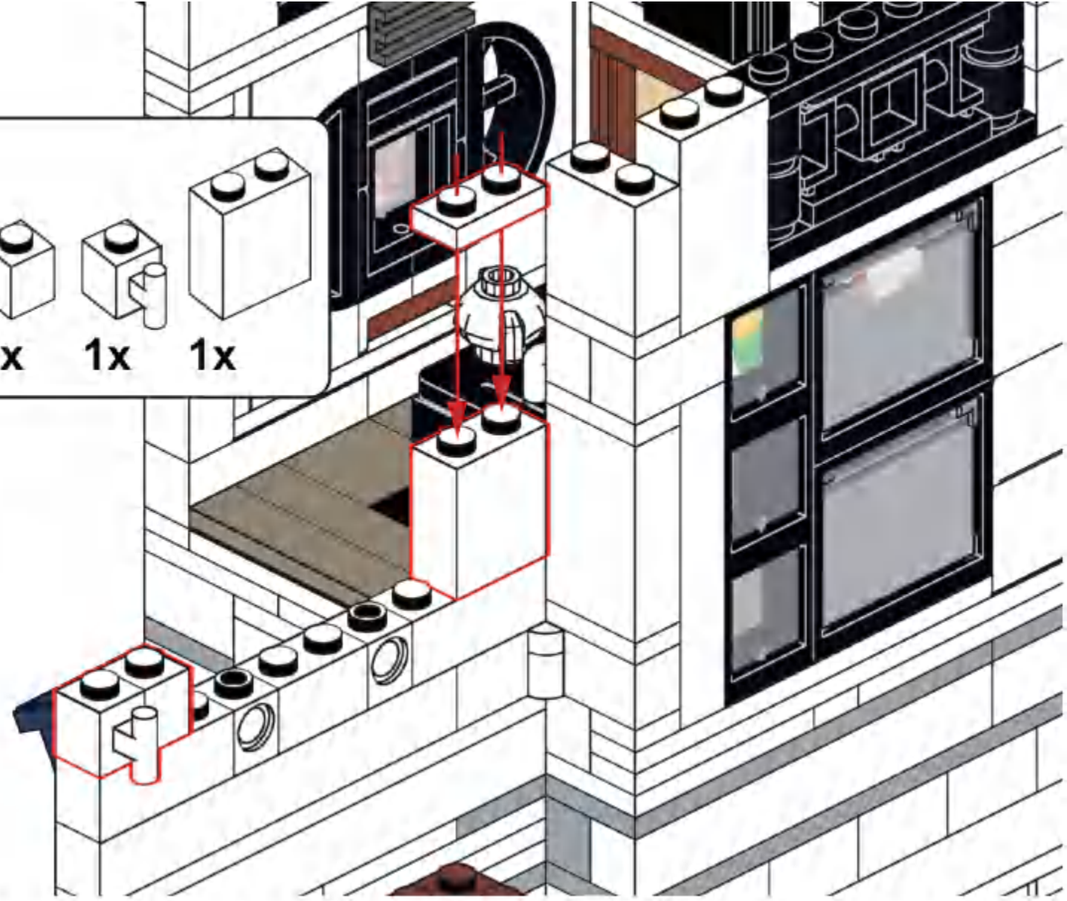

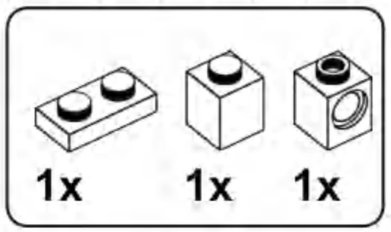

B78

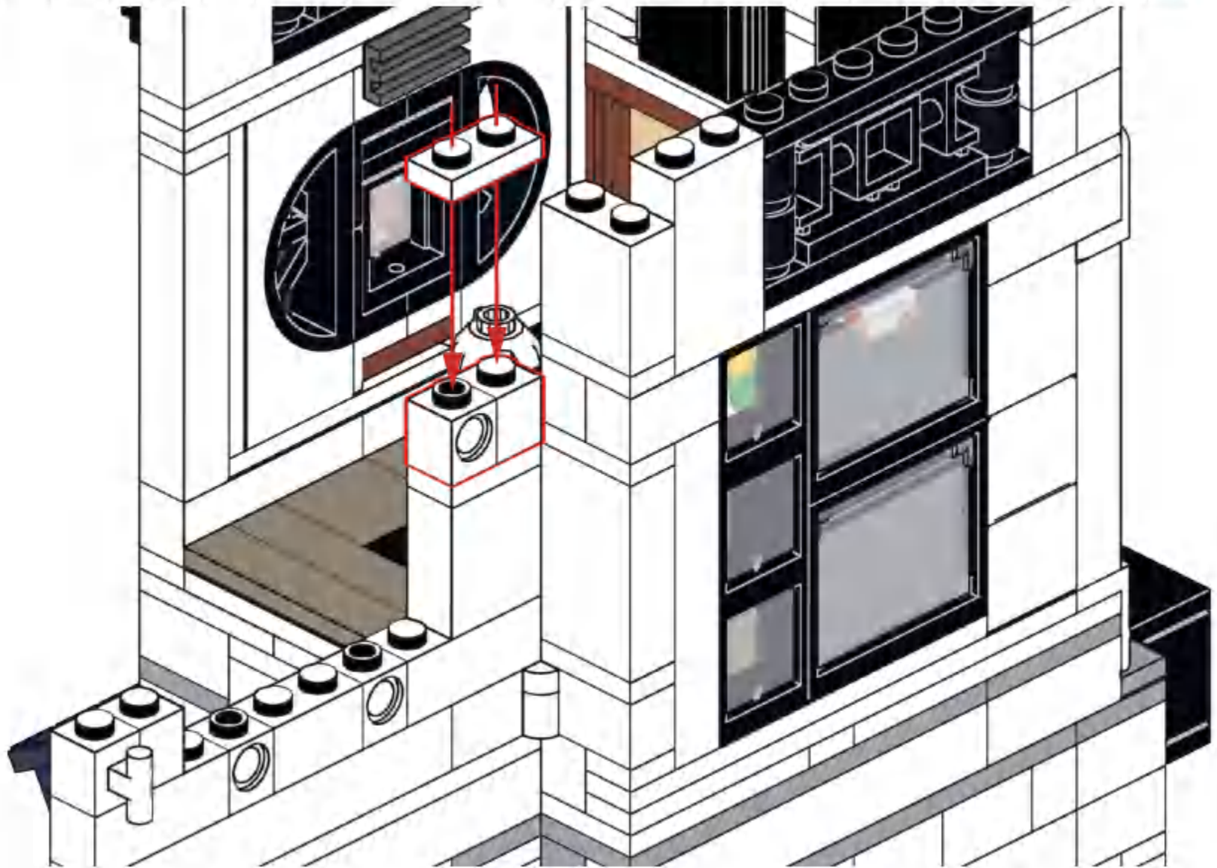

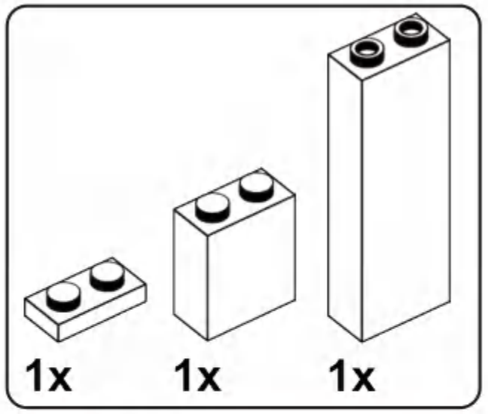

B79

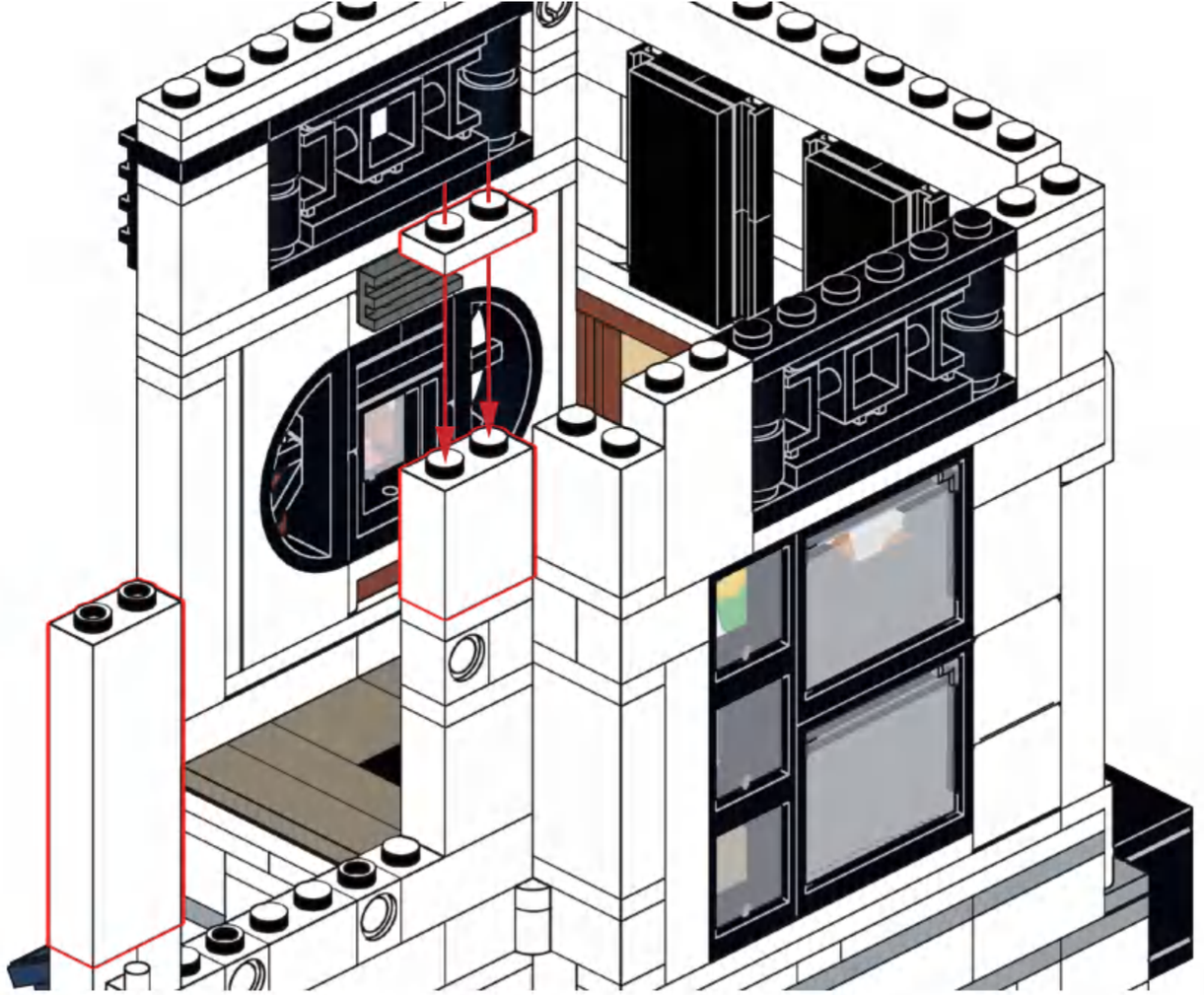

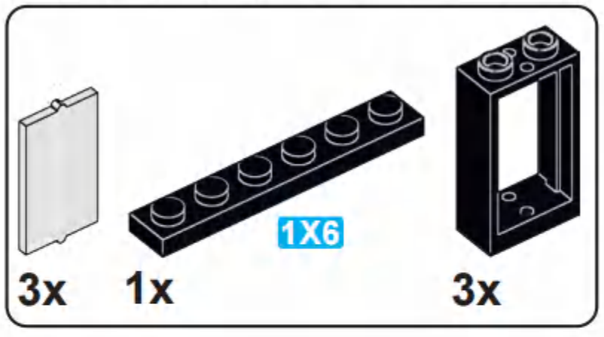

B80

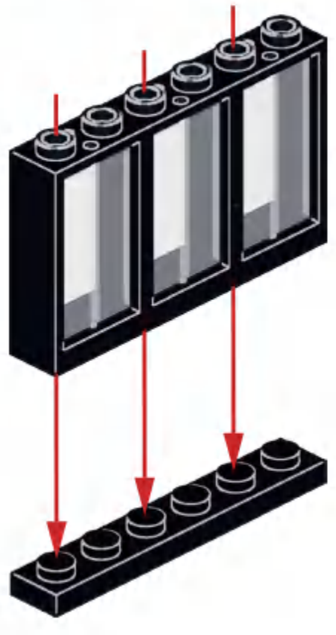

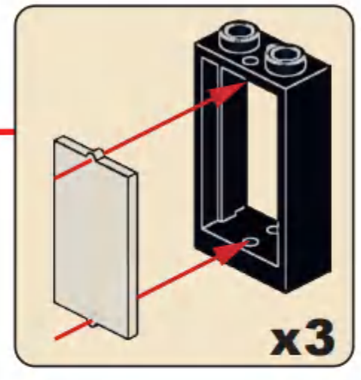

3x

B81

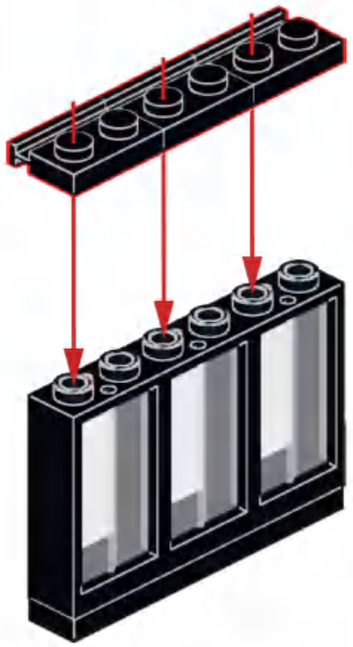

3x 3x

B82

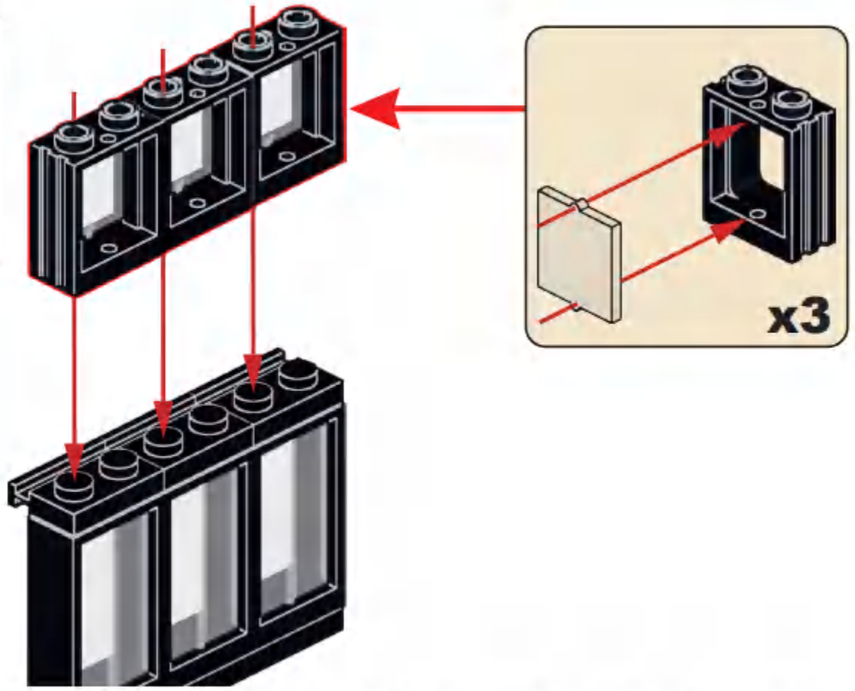

3x

B83

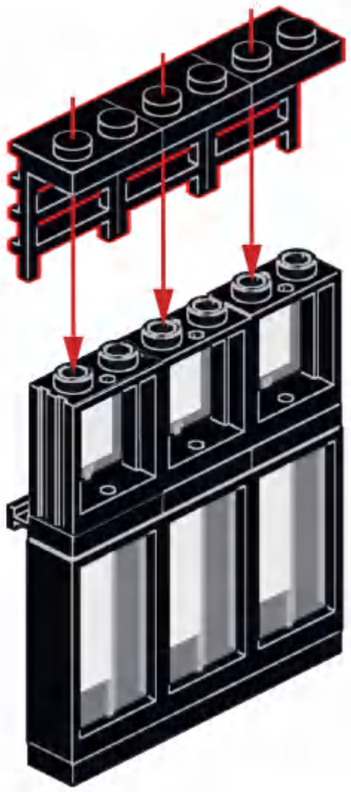

B84

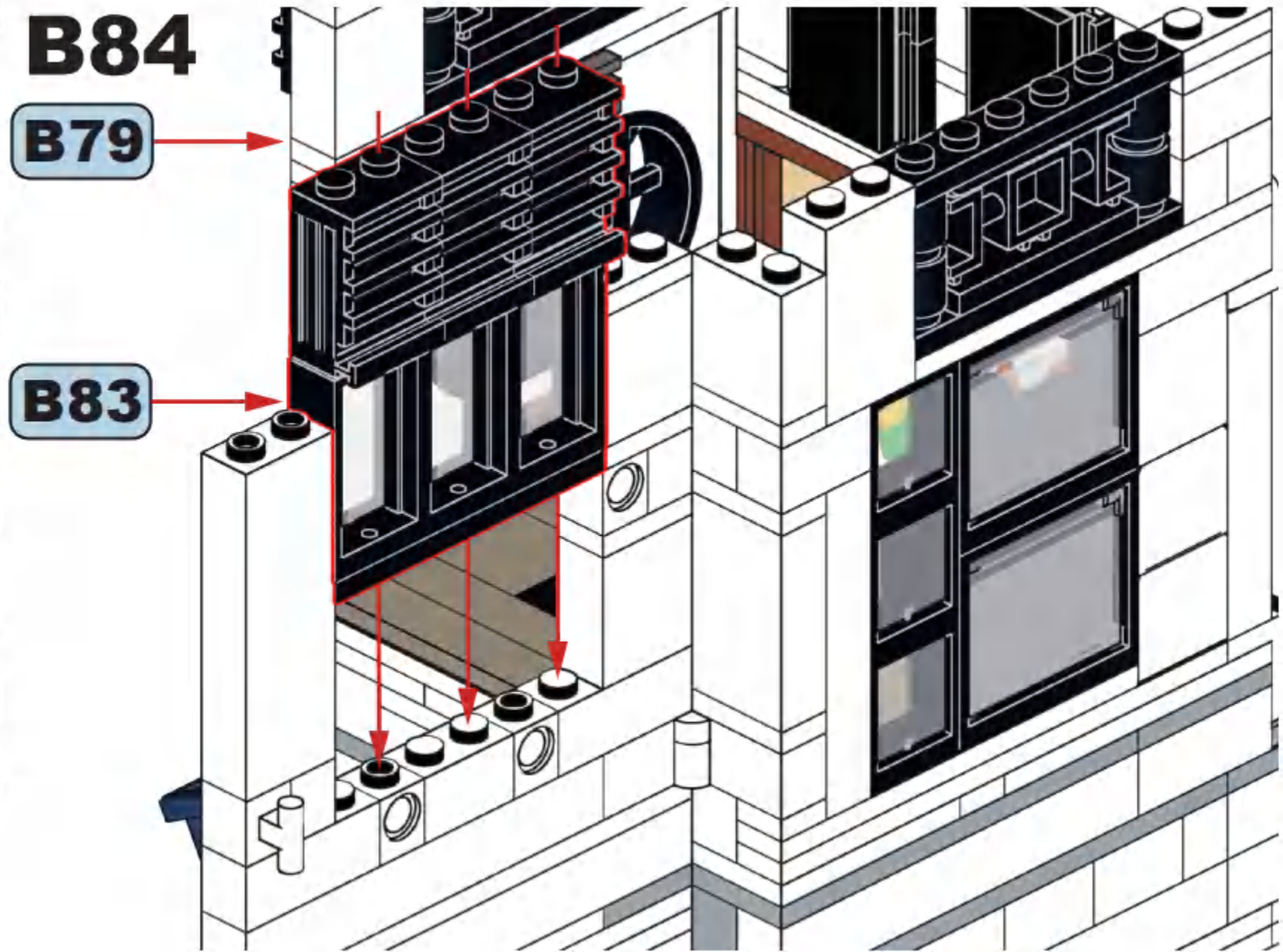

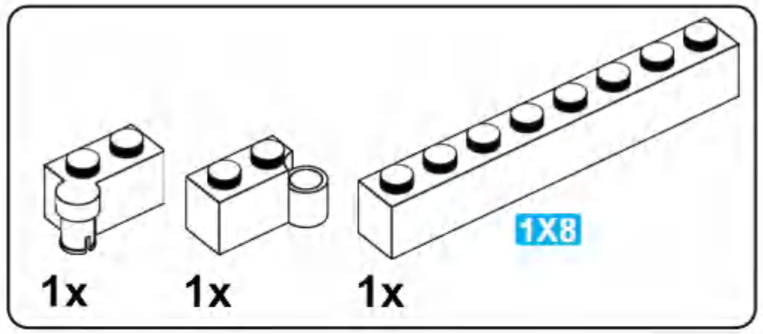

B85

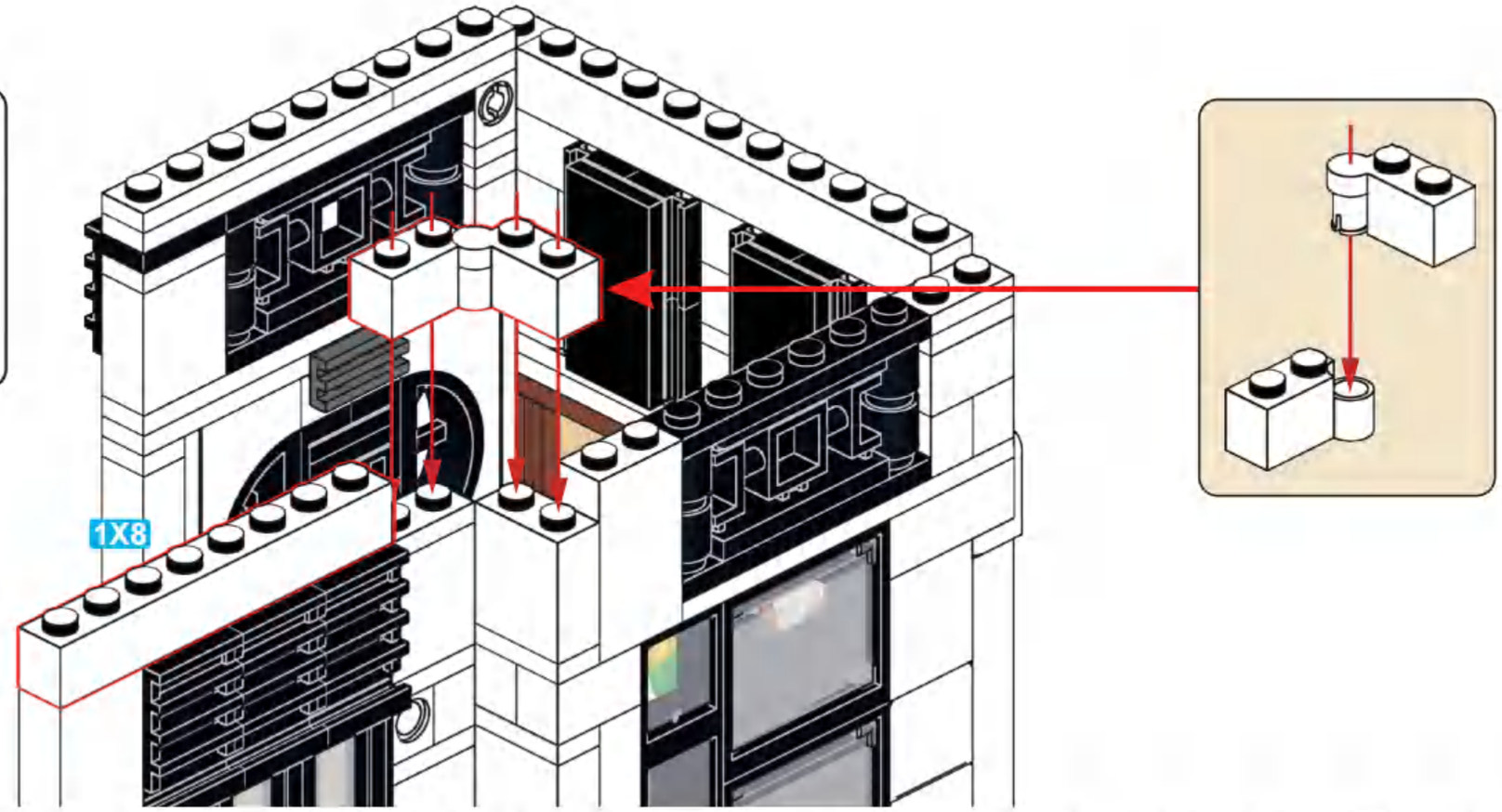

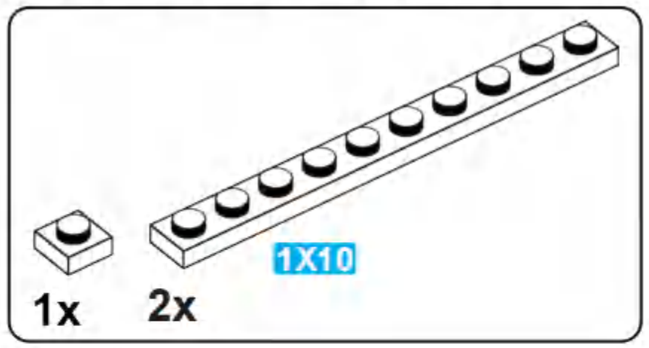

B86

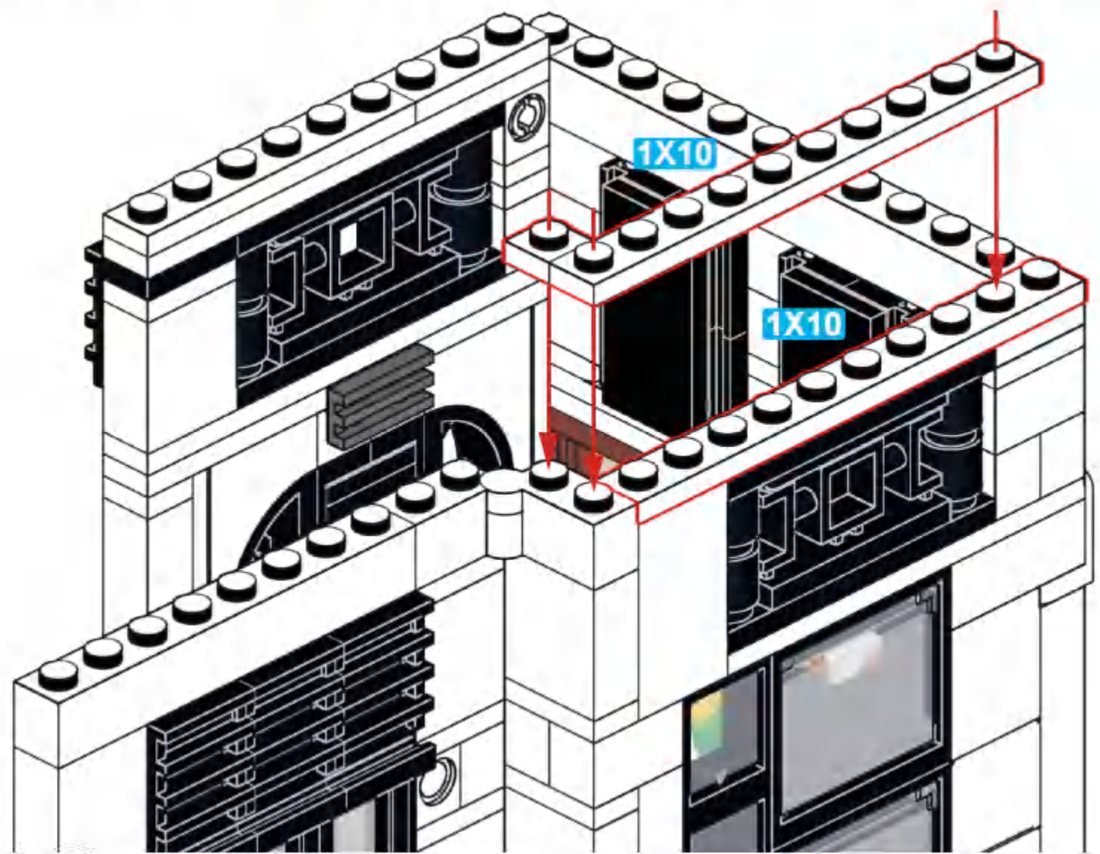

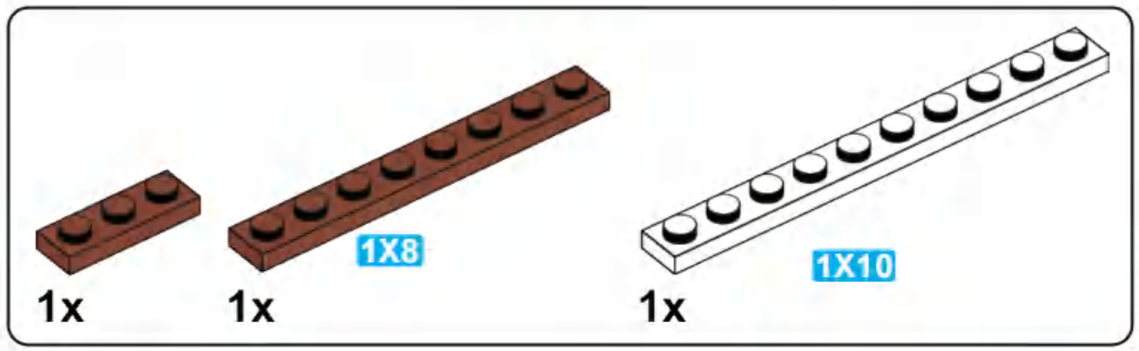

B87

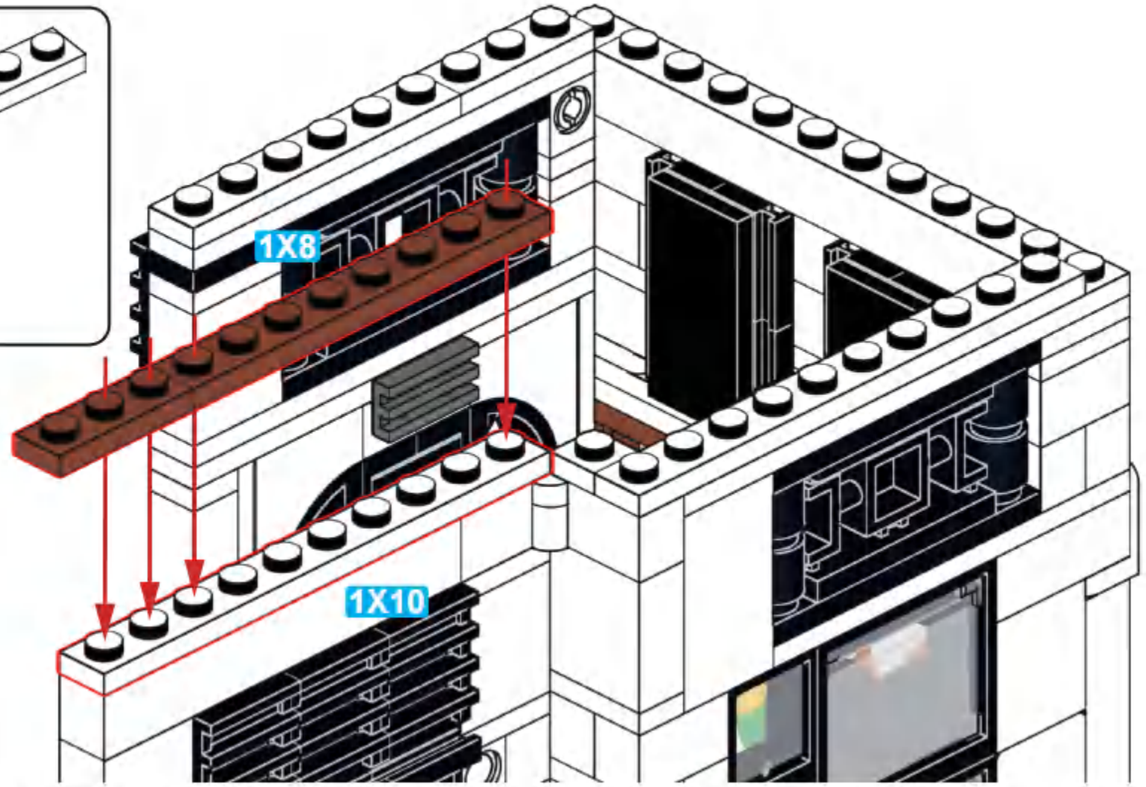

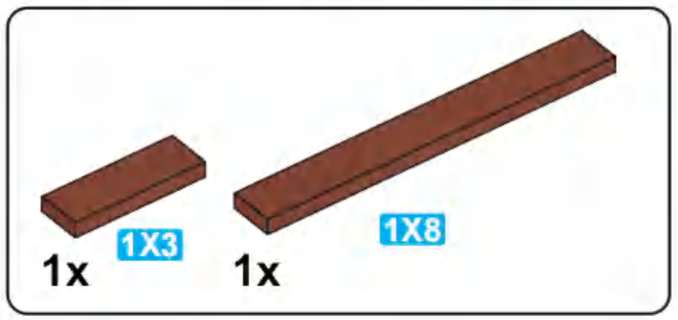

B88

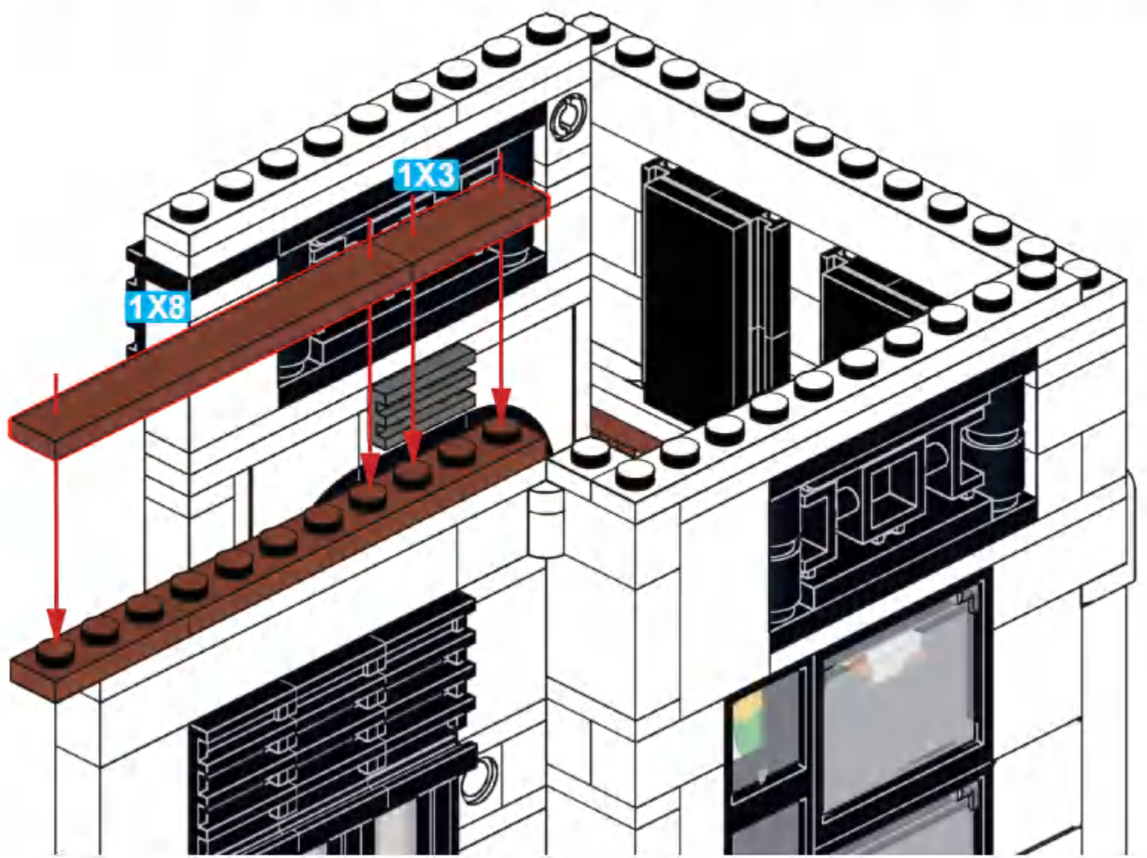

C

6x

C1

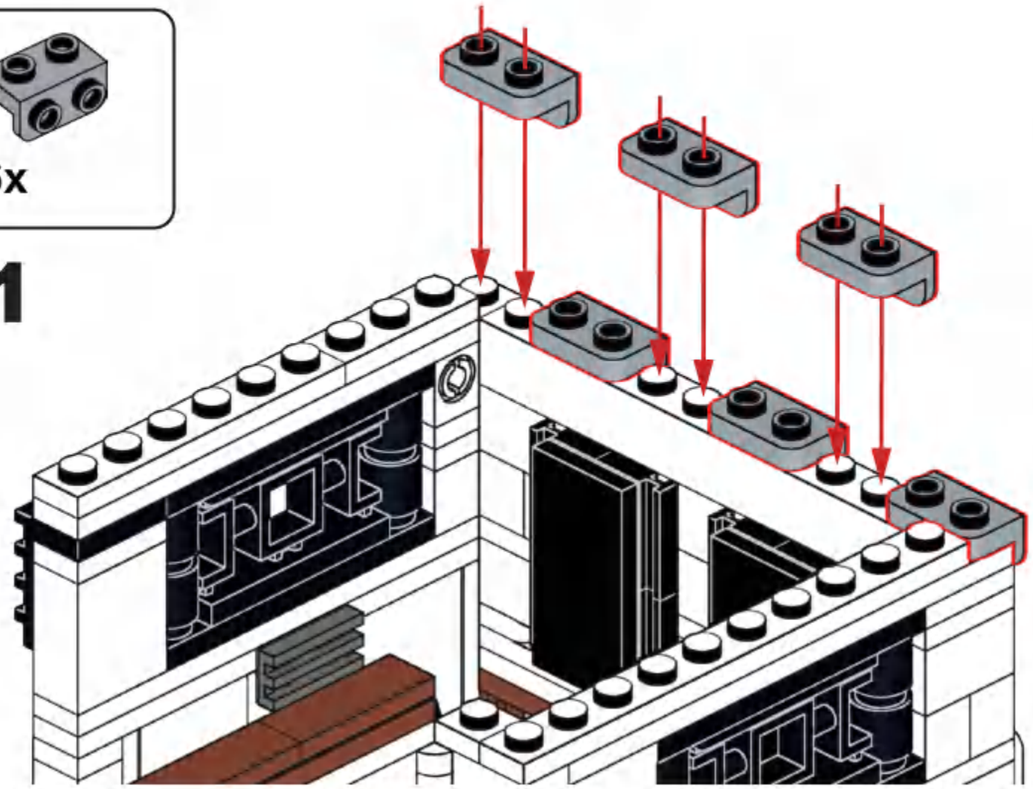

1x 1x

2X10

C2

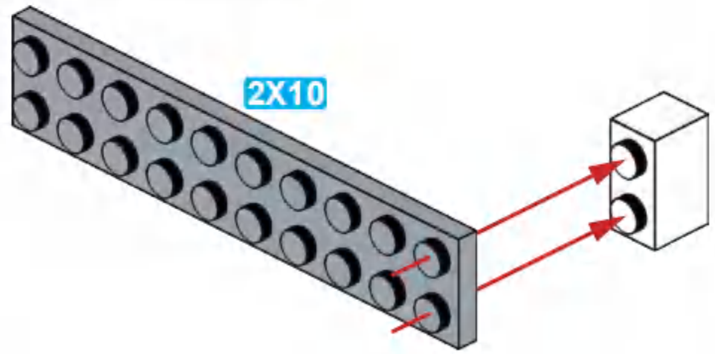

1x 1x 4x

C3

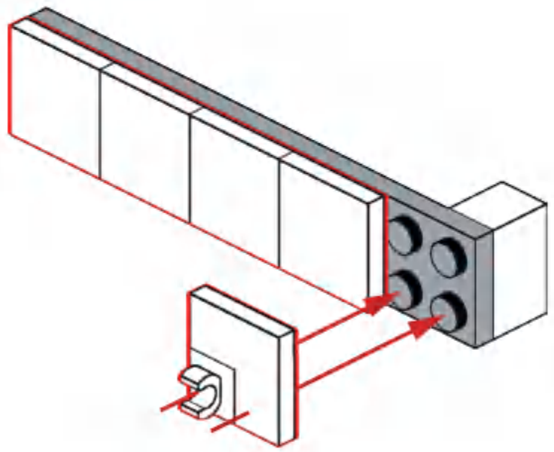

C4

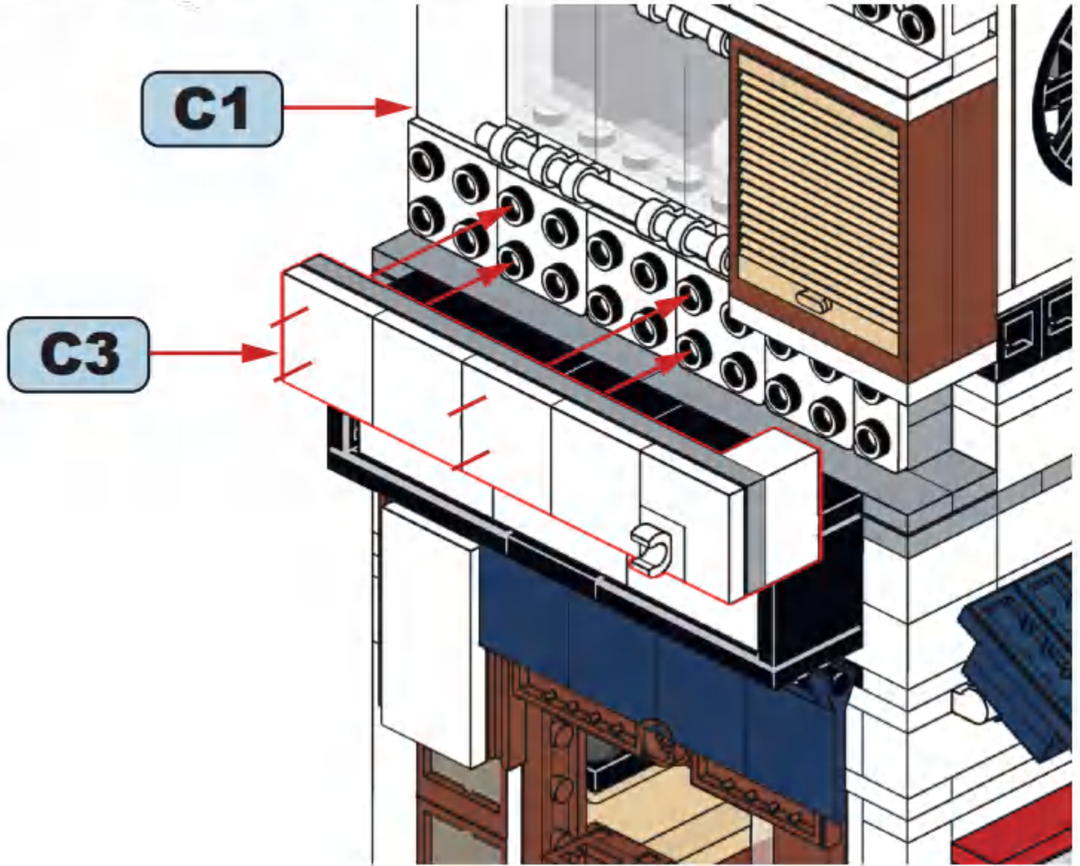

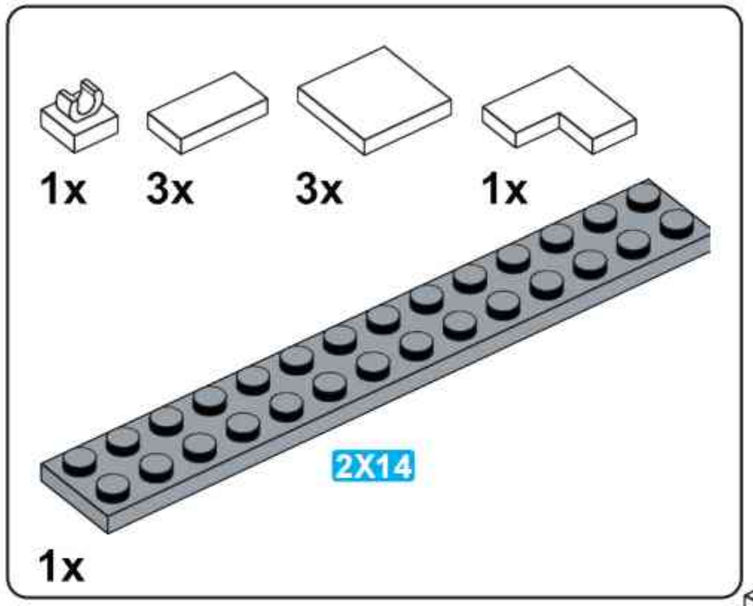

C5

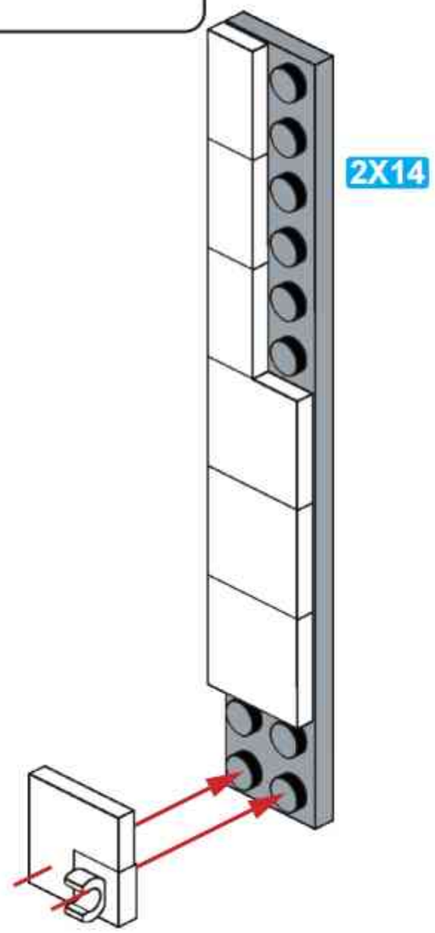

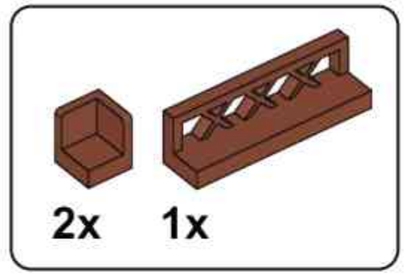

C6

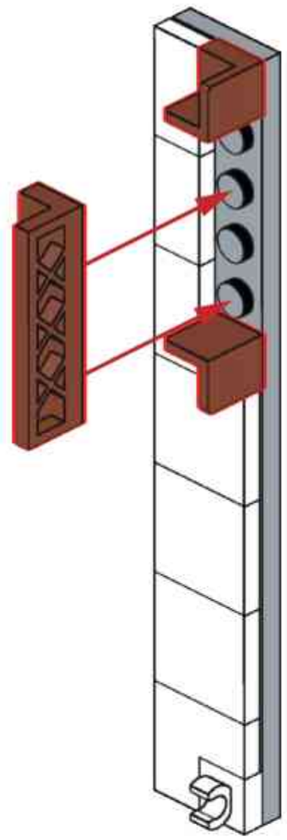

C7

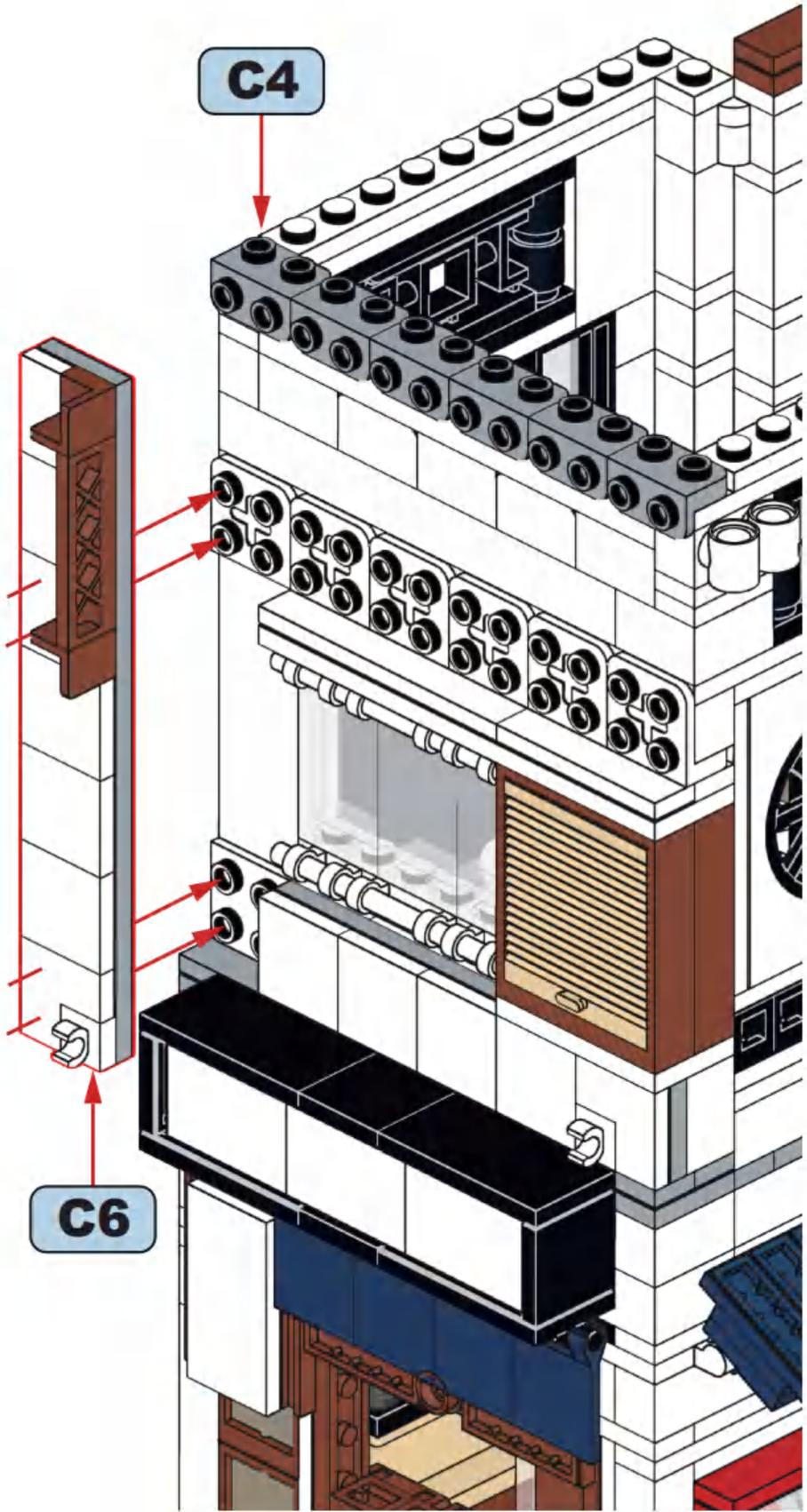

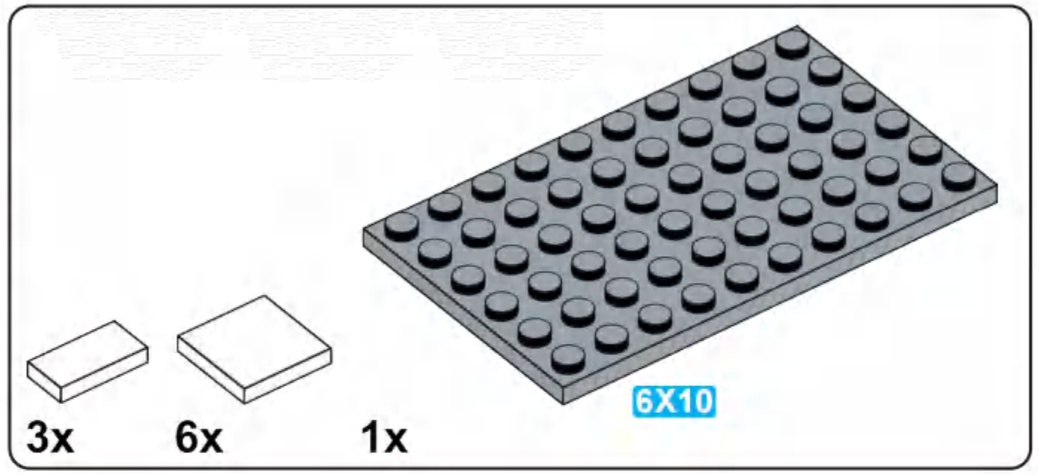

C8

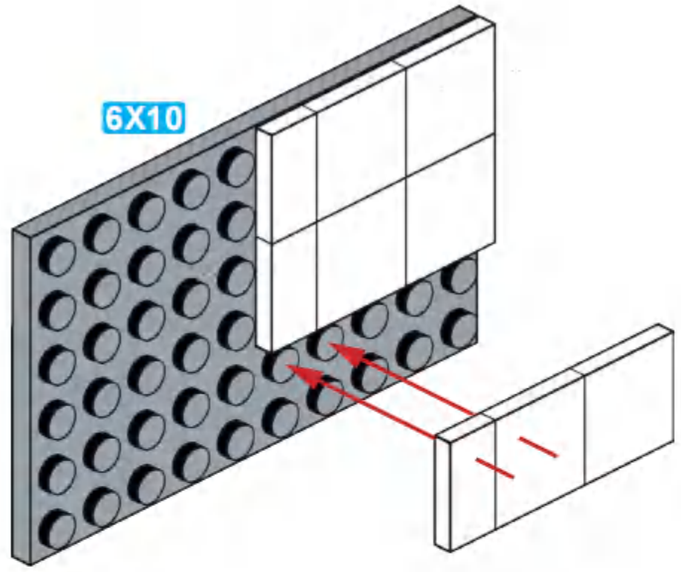

1x

C9

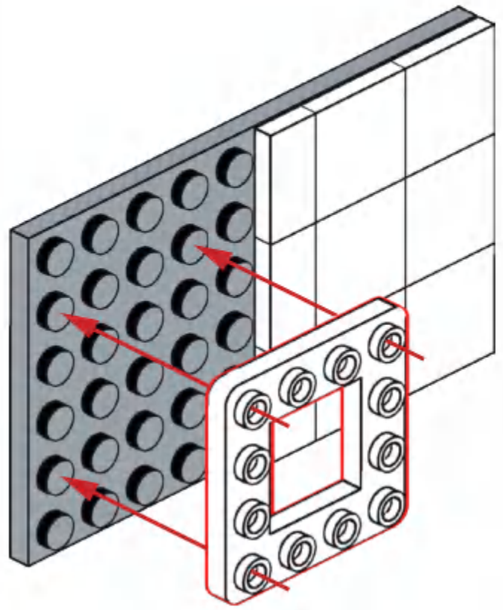

2x 1x

C10

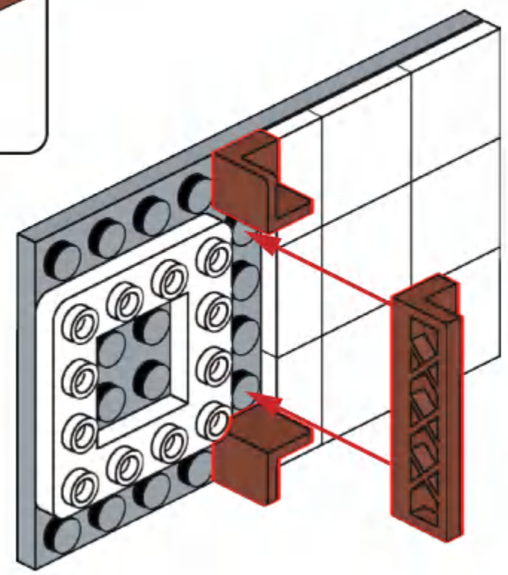

1x

C11

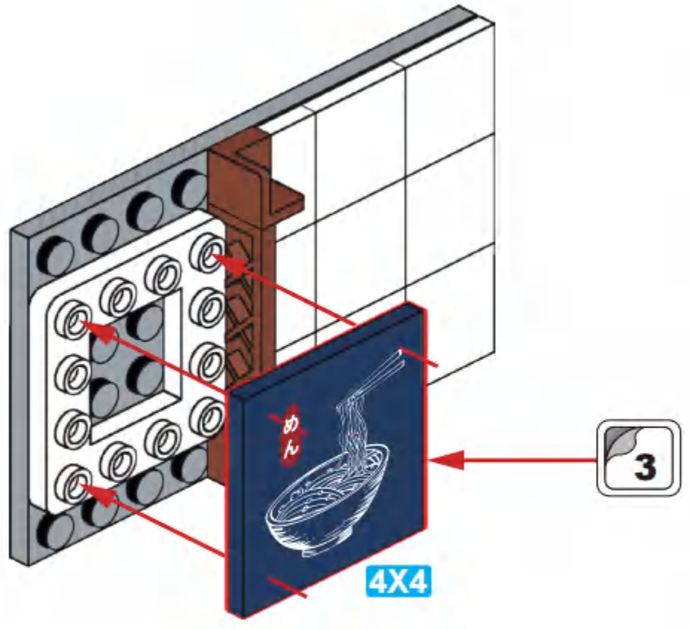

2x

C12

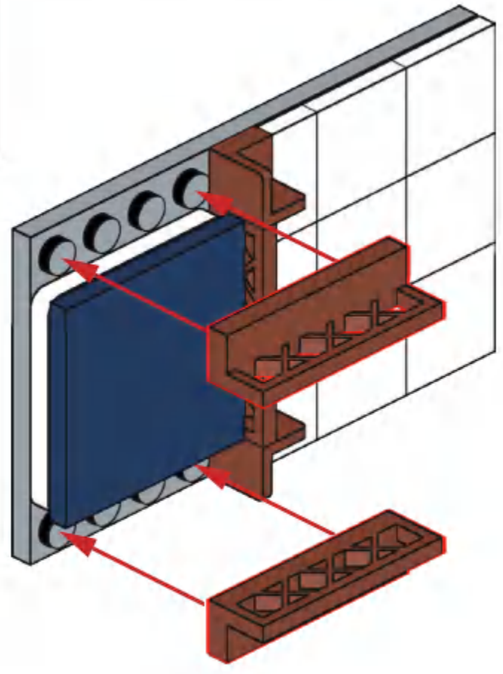

C13

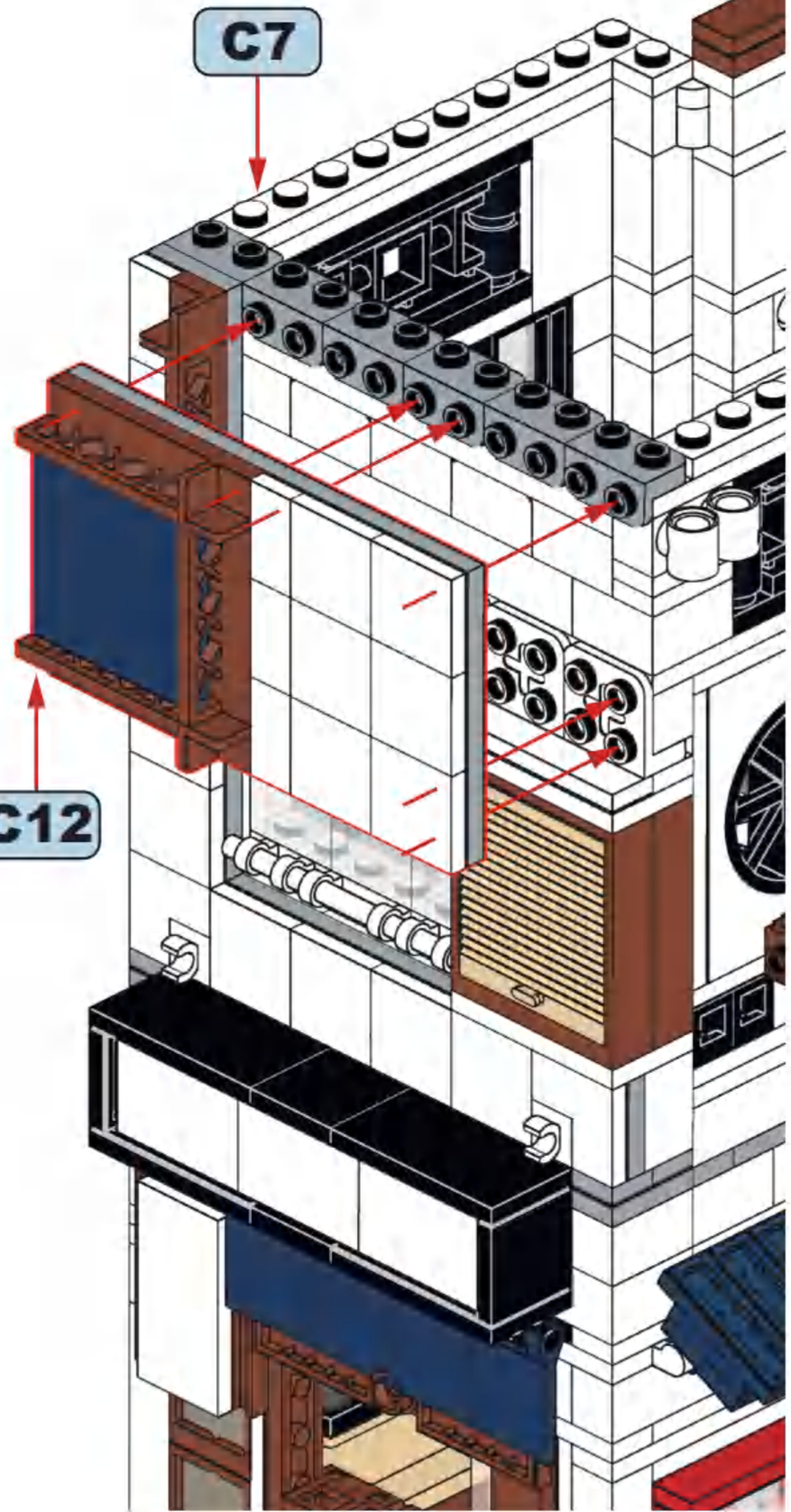

C14

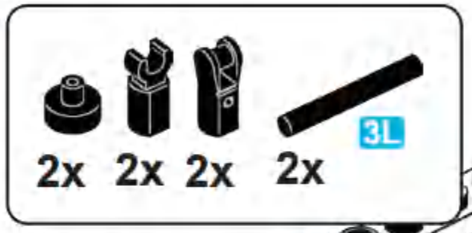

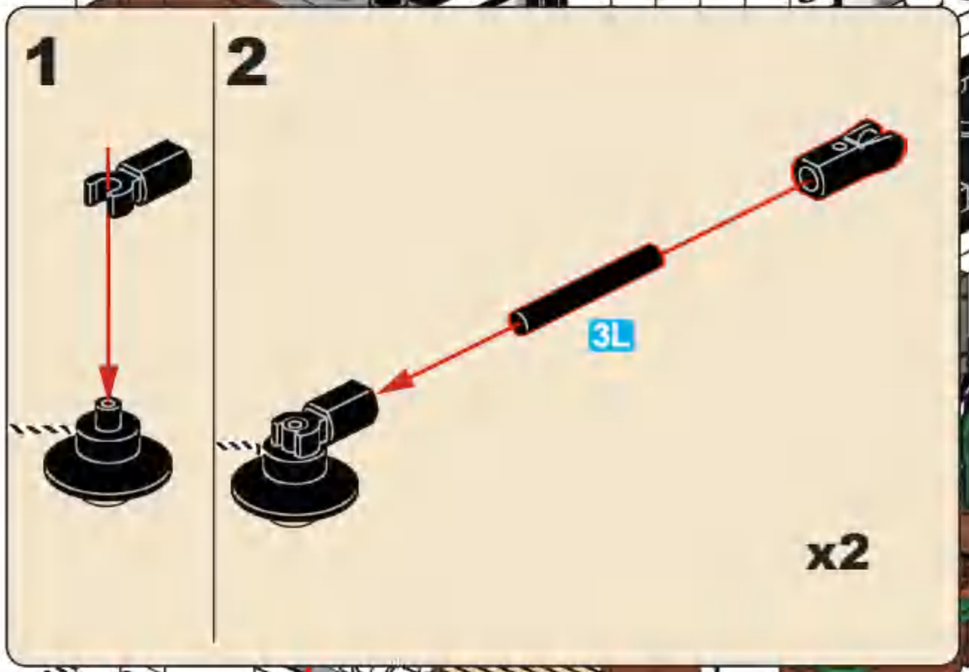

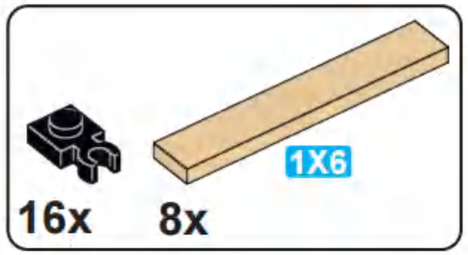

C15

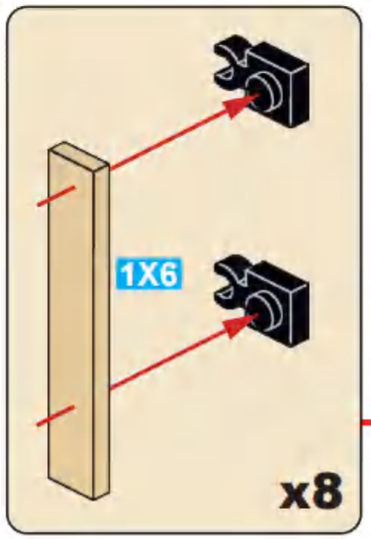

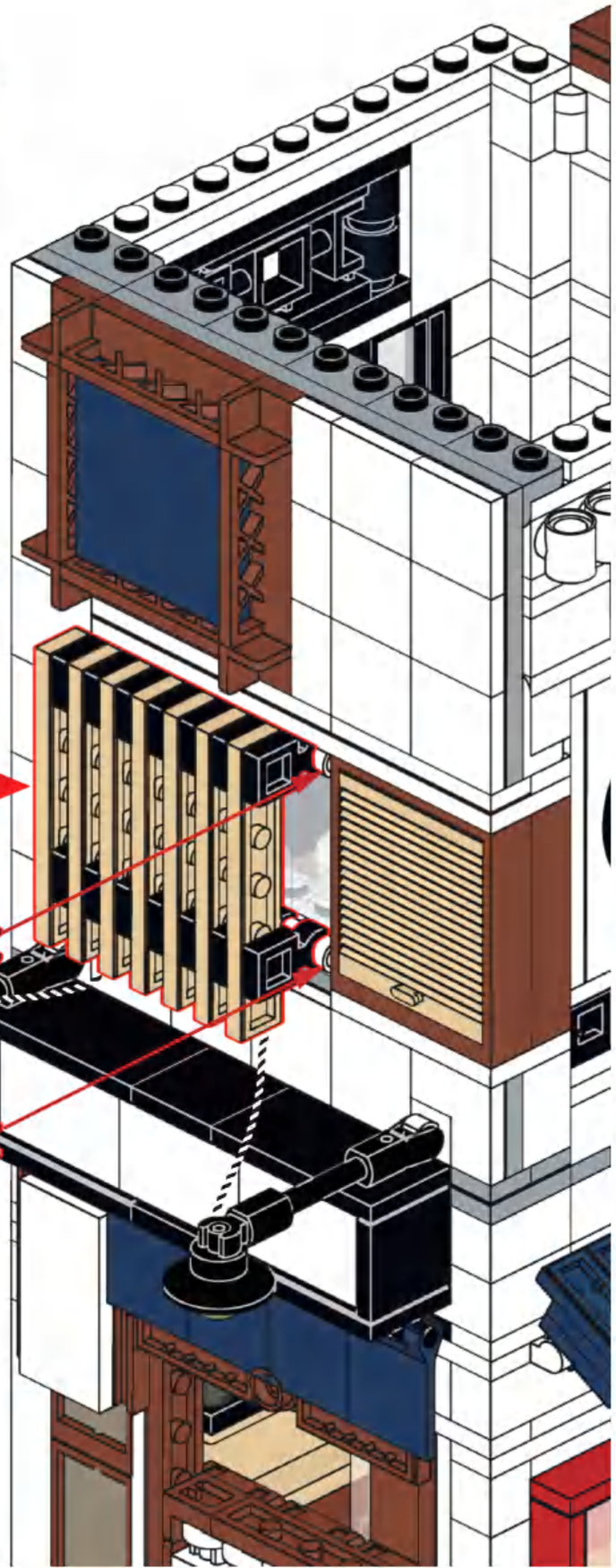

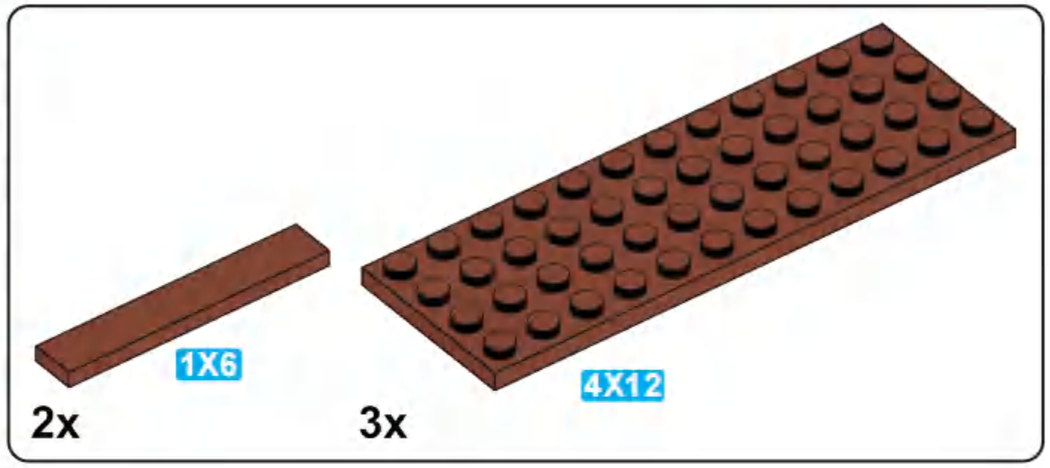

C16

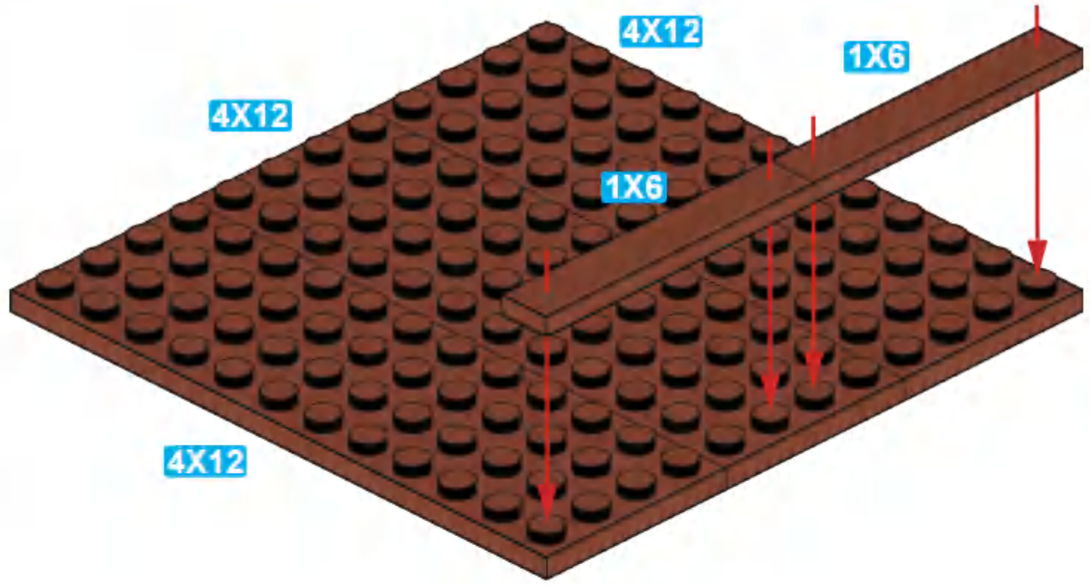

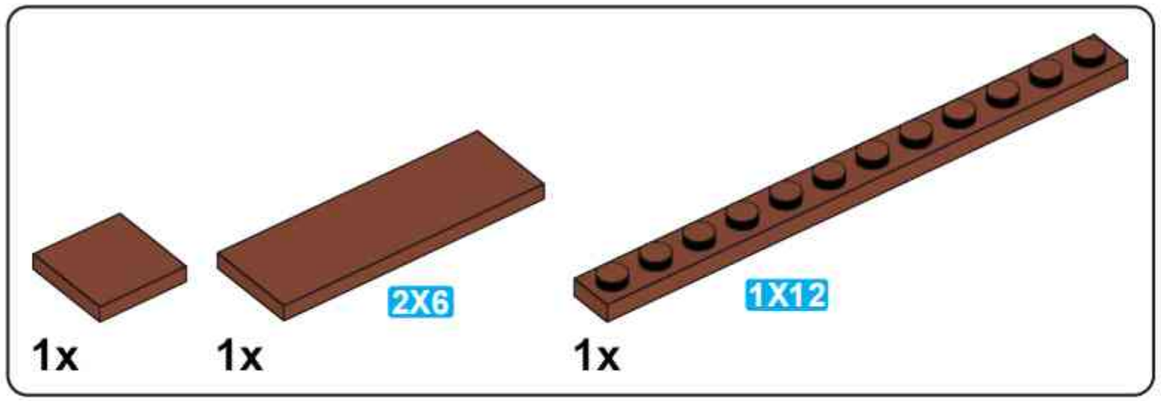

C17

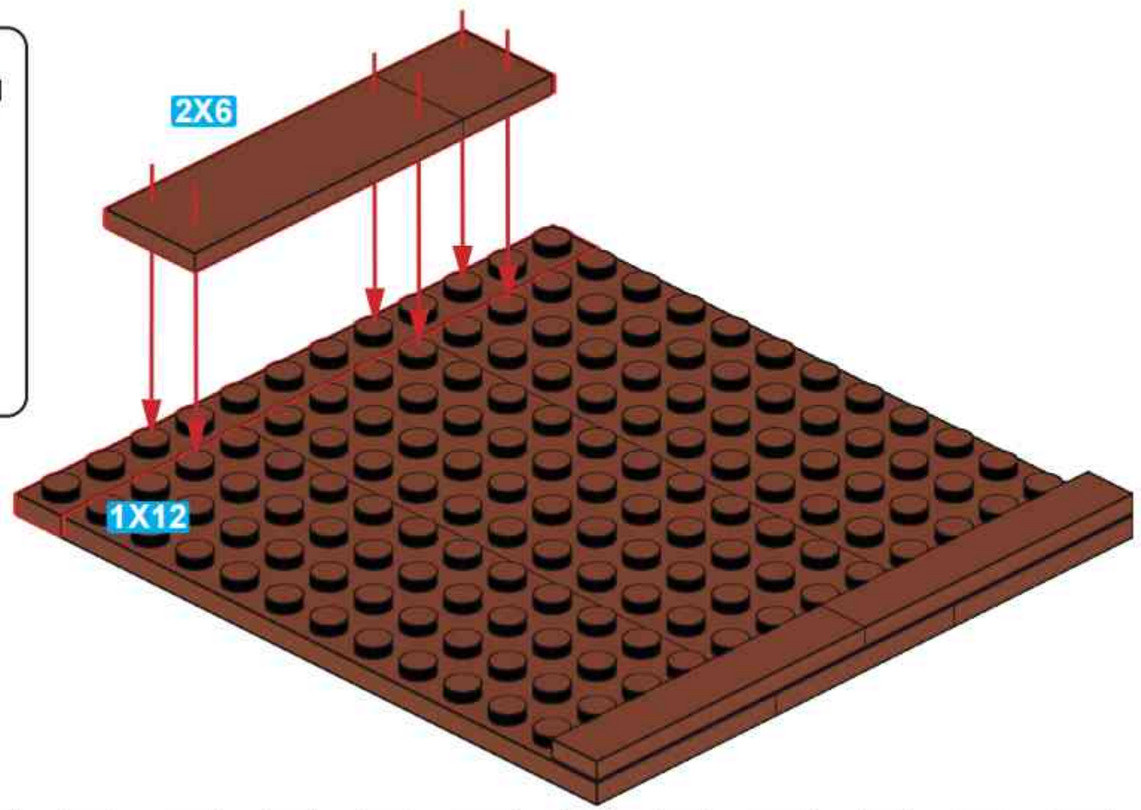

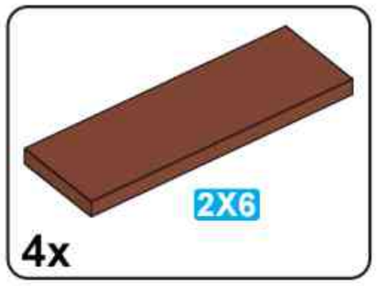

C18

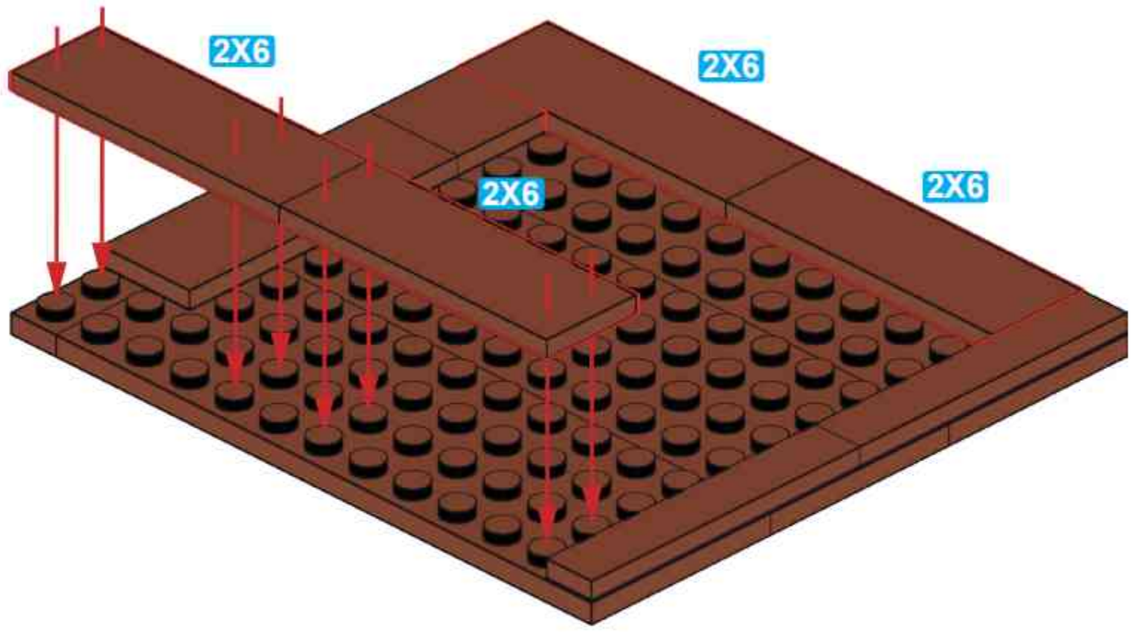

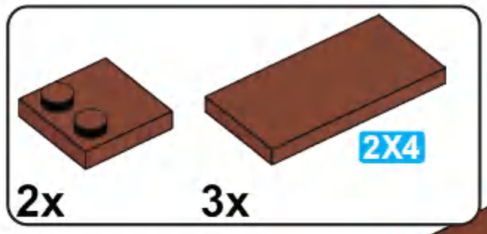

C19

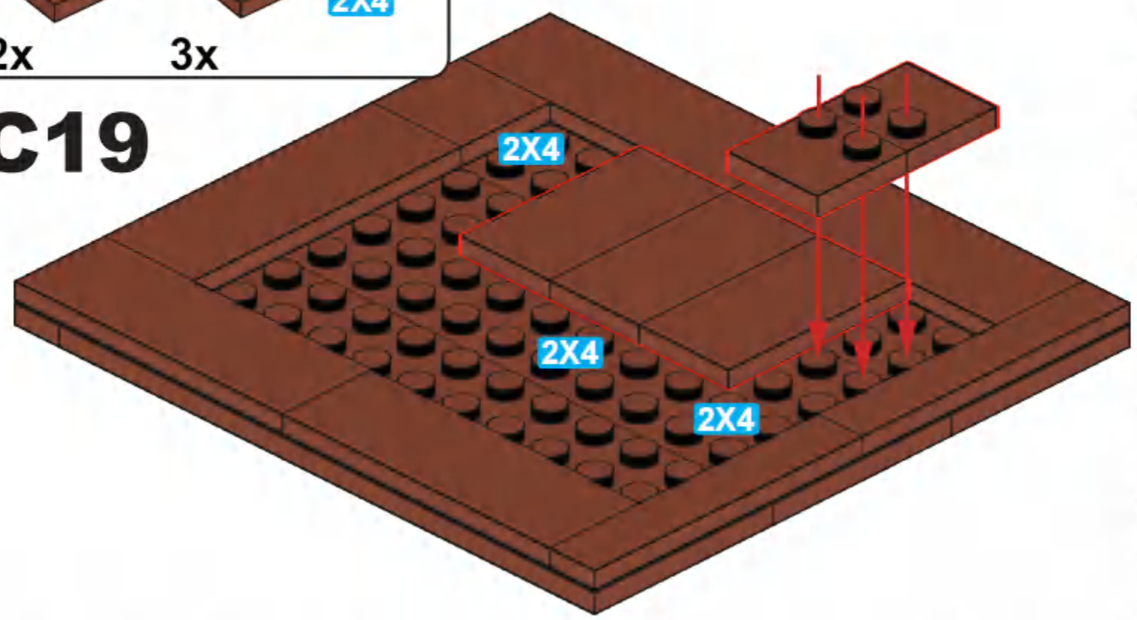

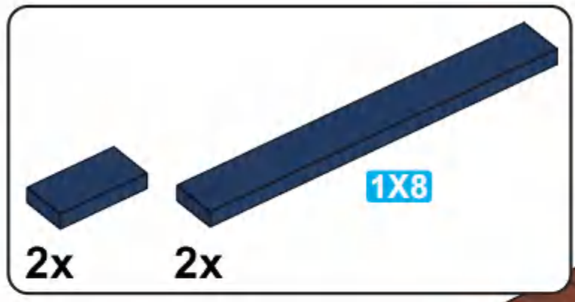

C20

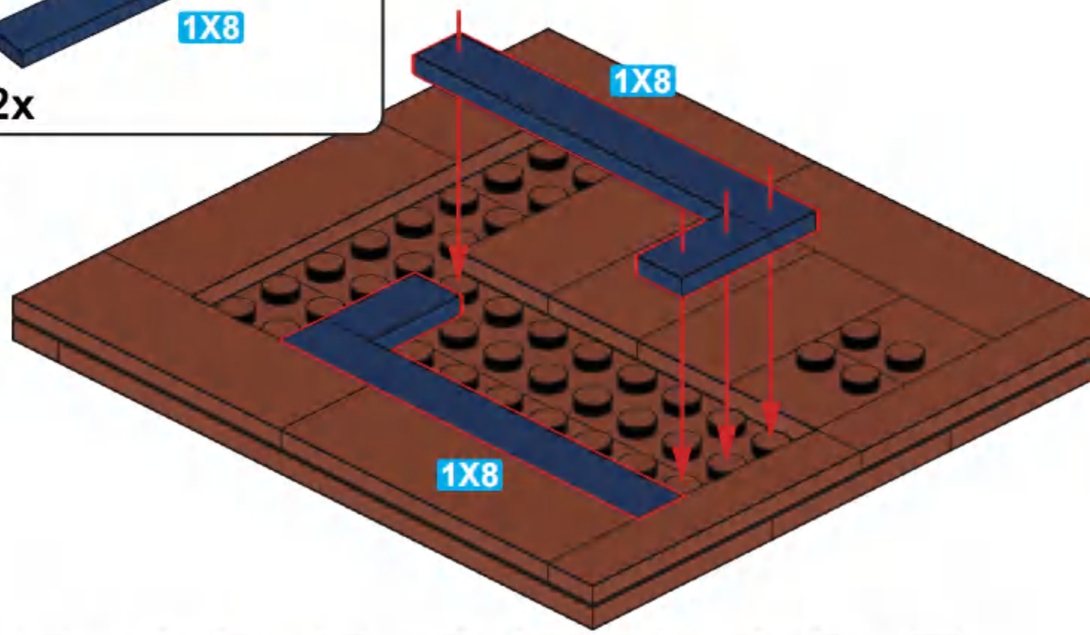

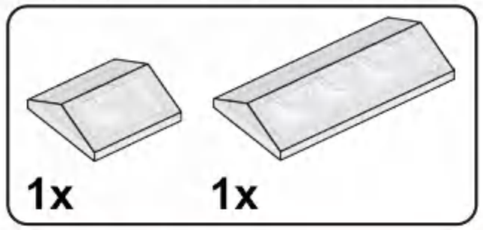

C21

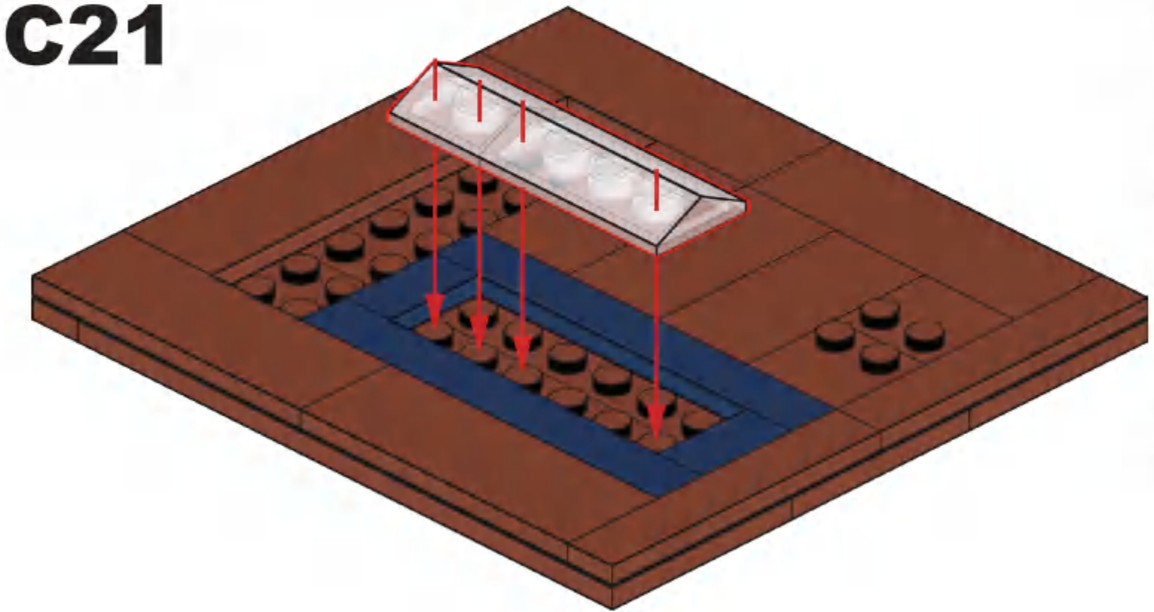

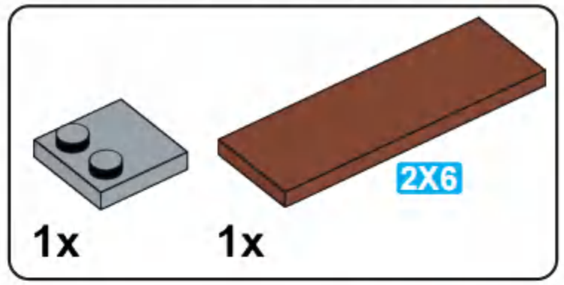

C22

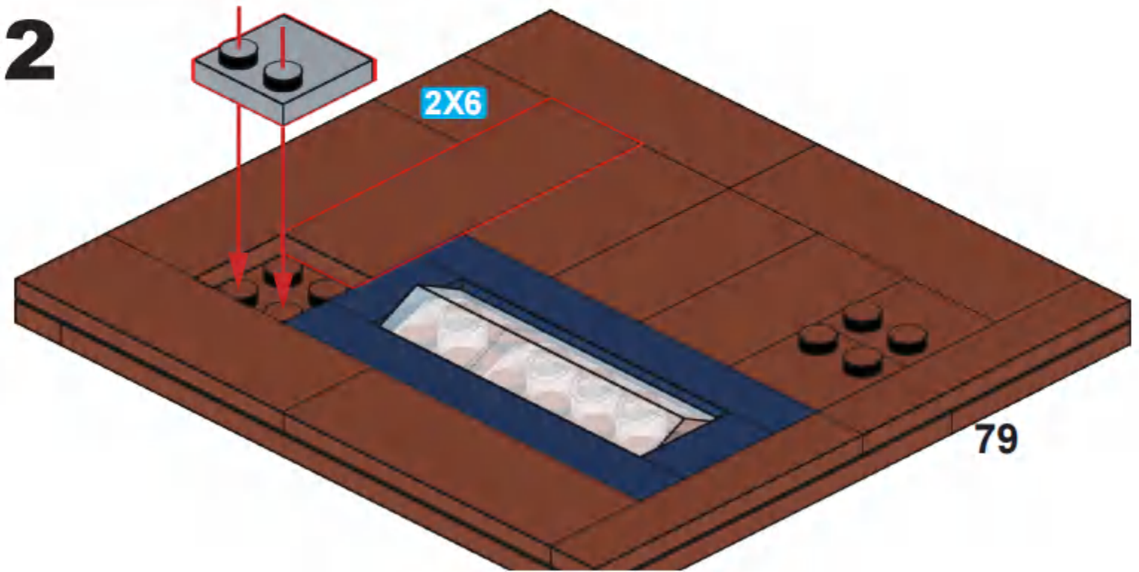

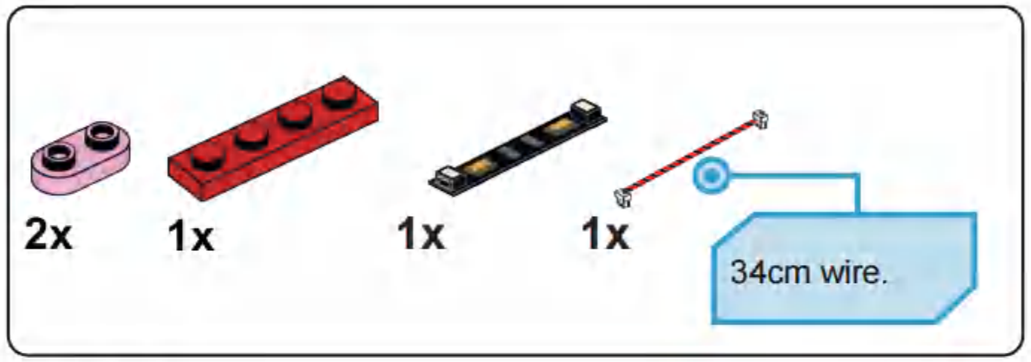

C23

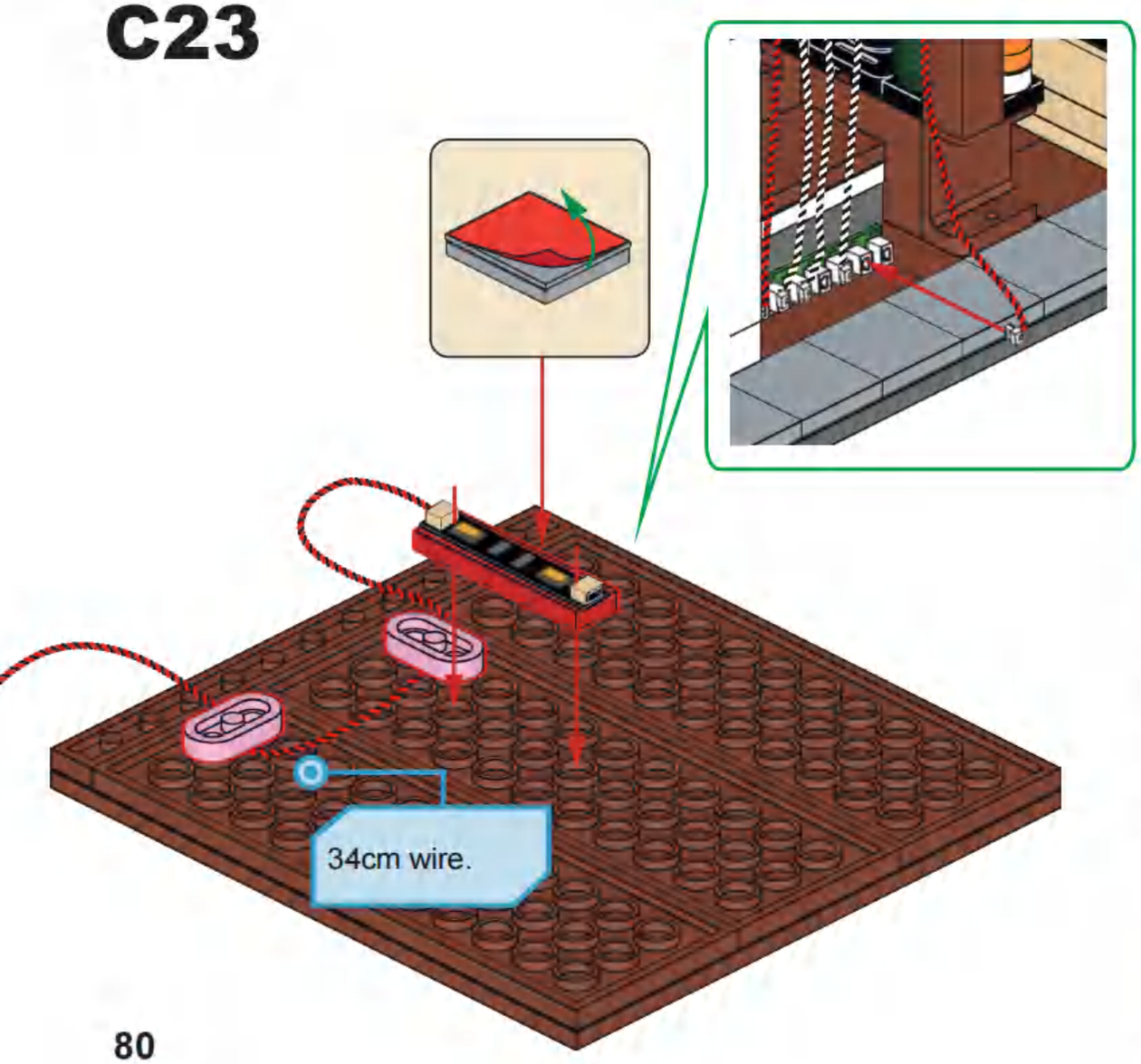

C24

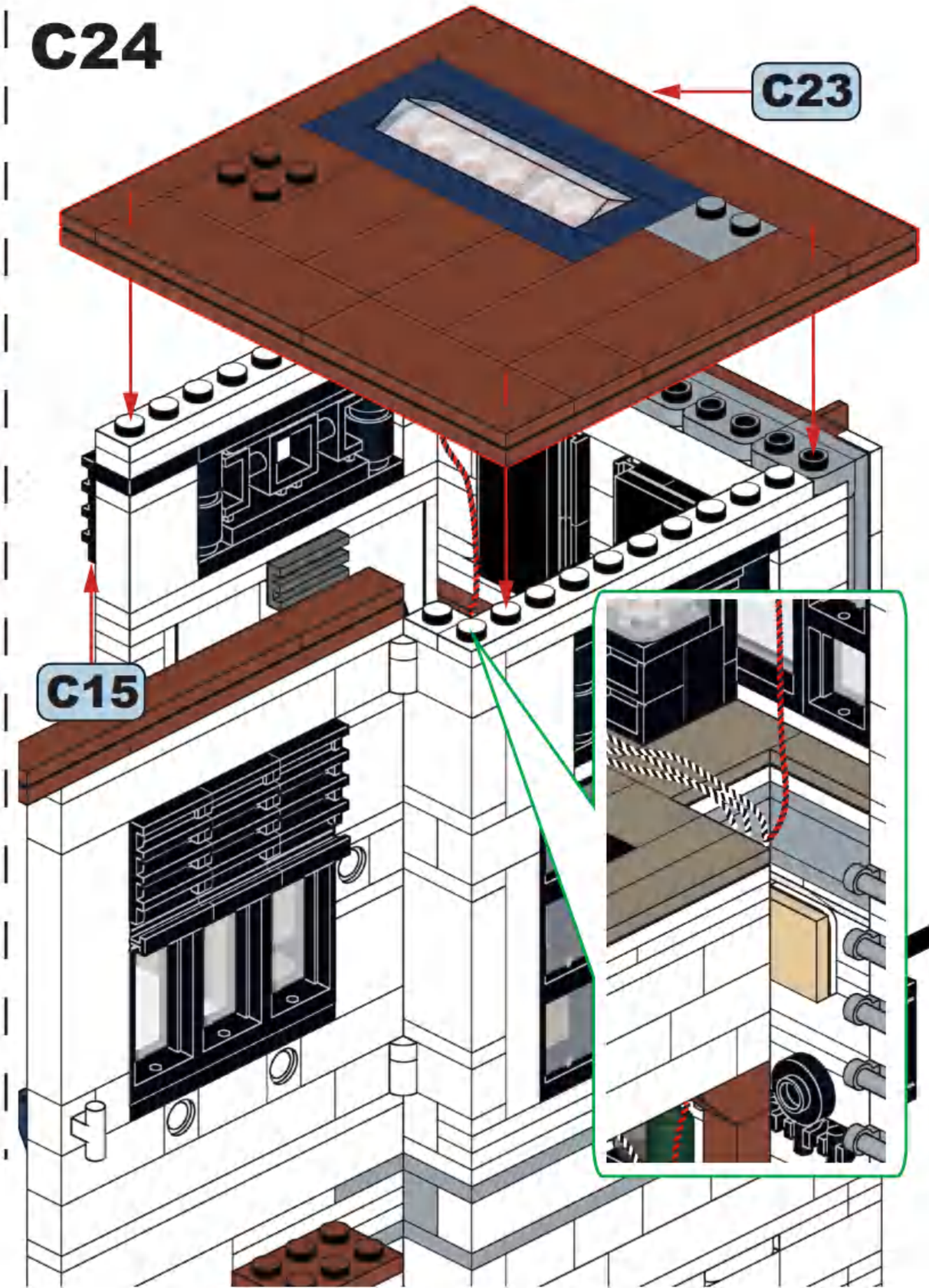

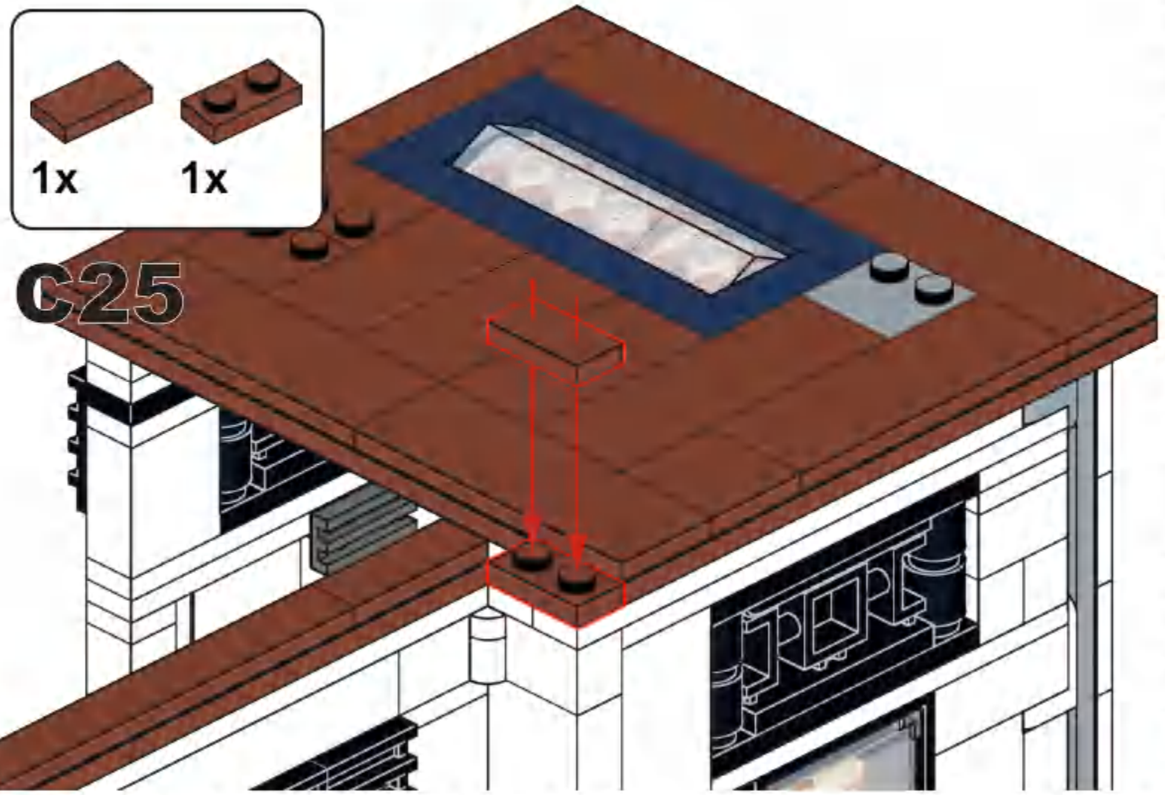

C25

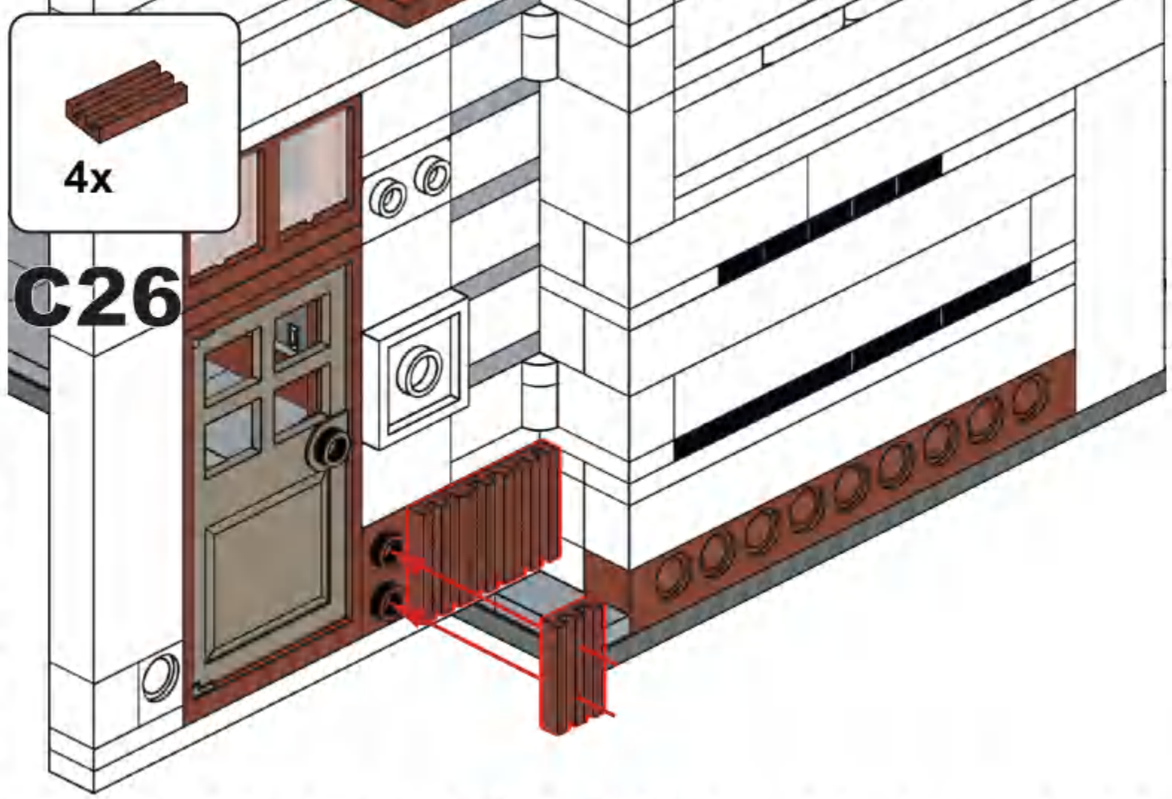

C26

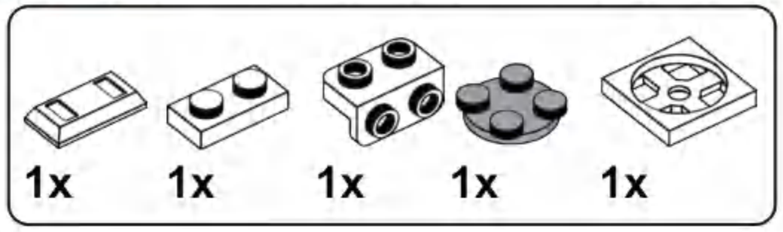

C27

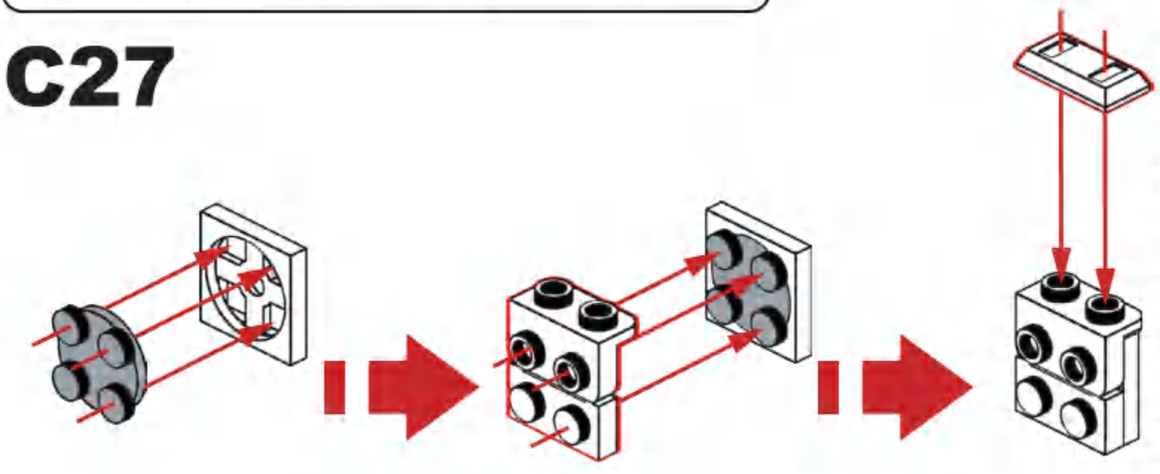

C28

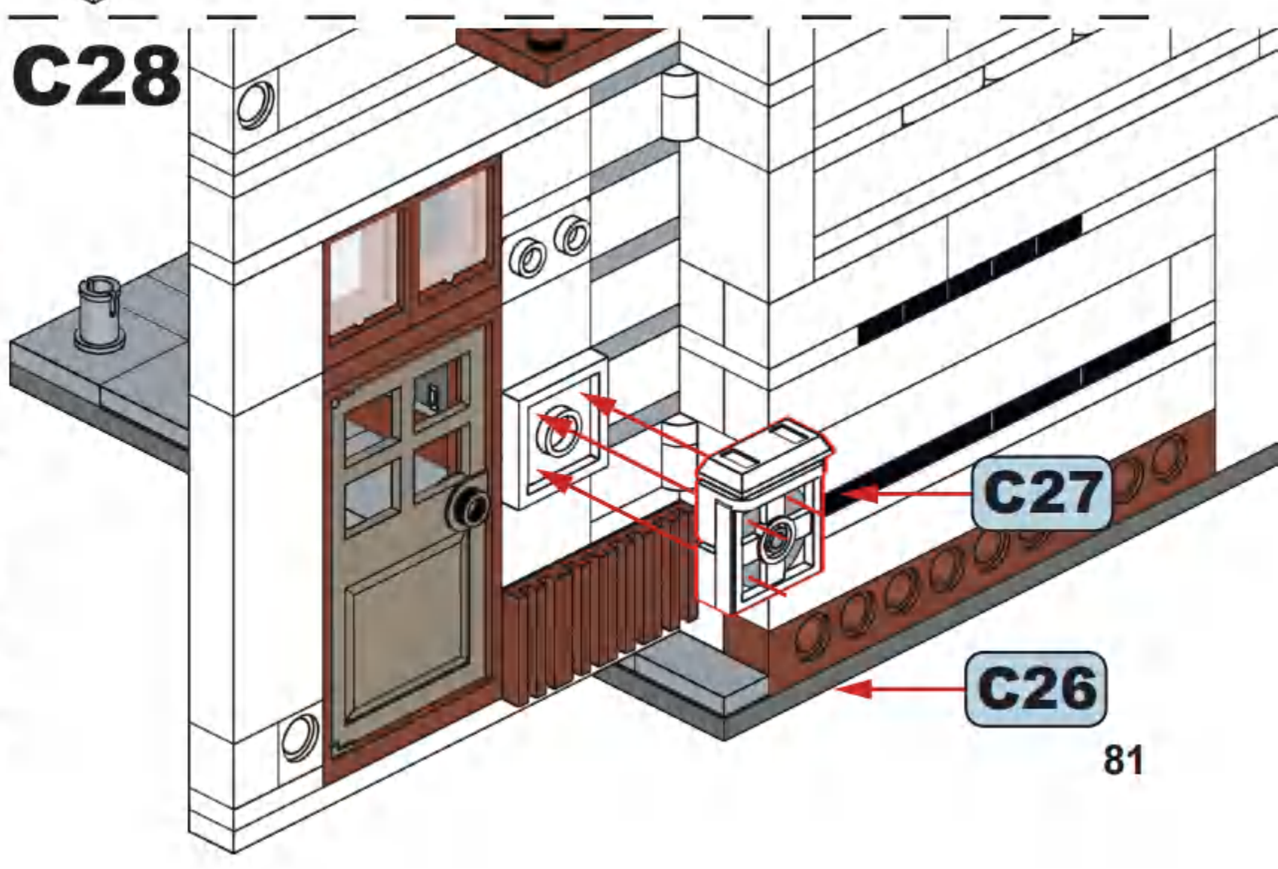

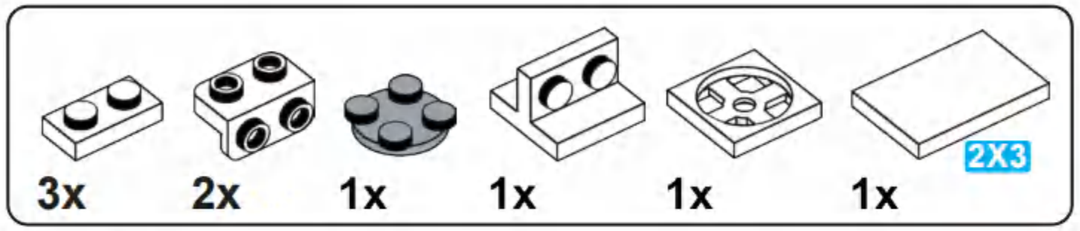

C29

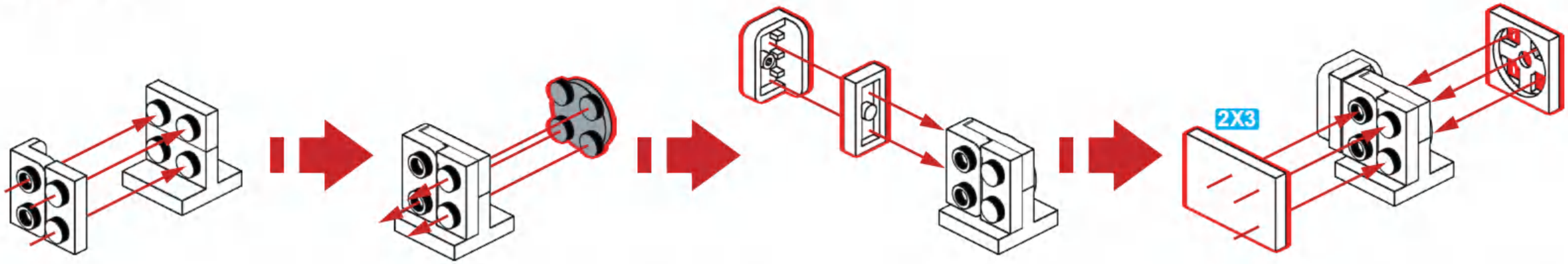

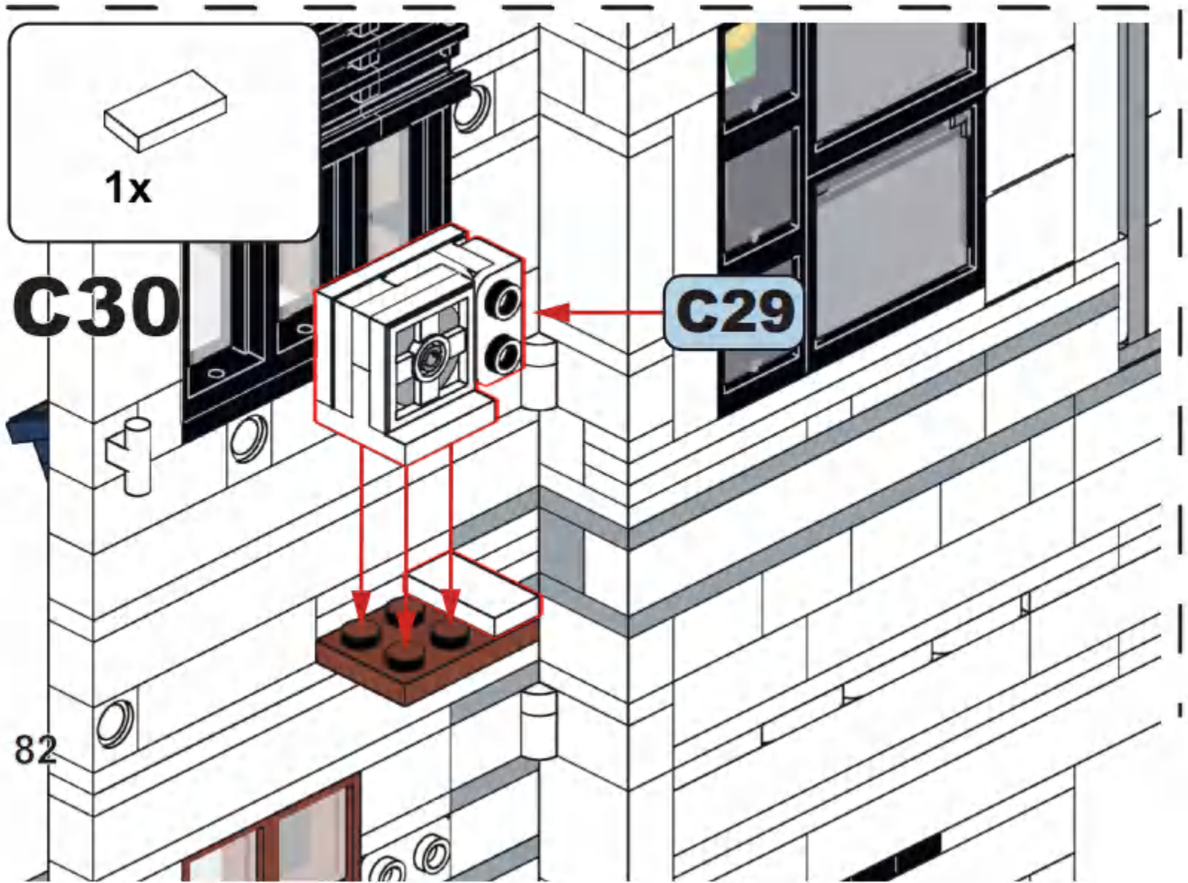

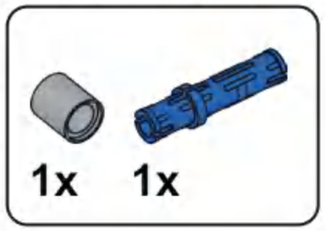

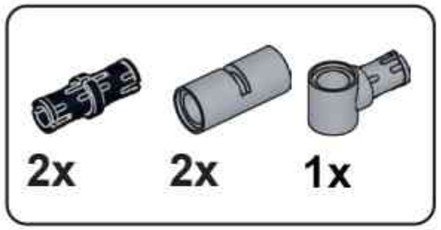

C32

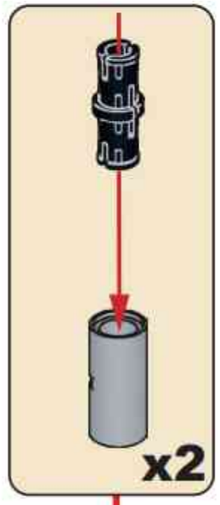

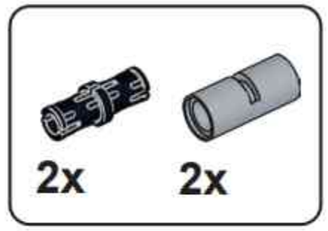

C33

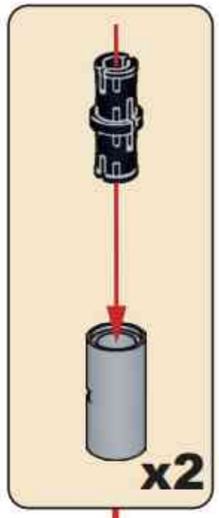

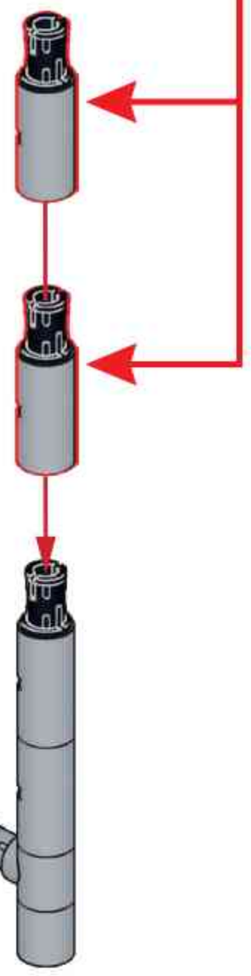

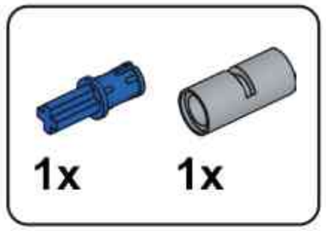

C34

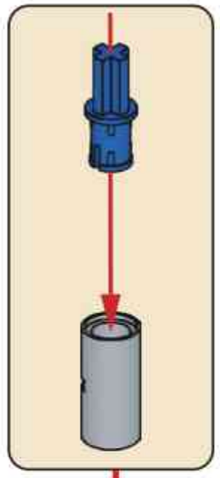

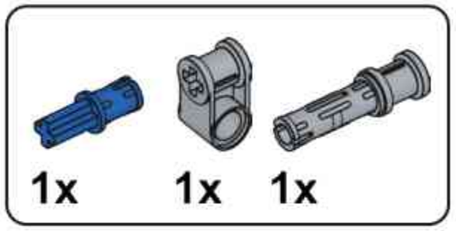

C35

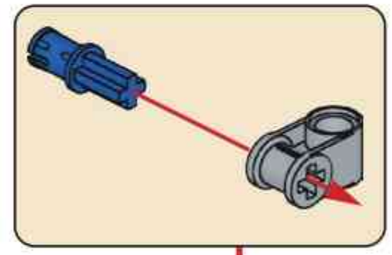

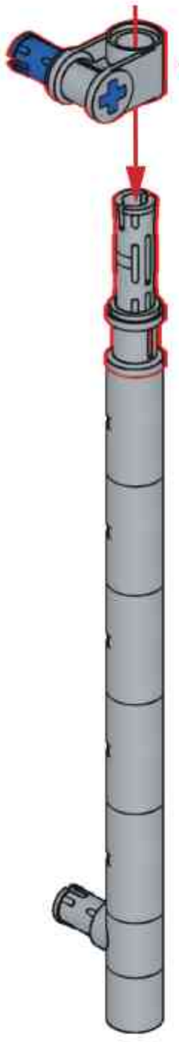

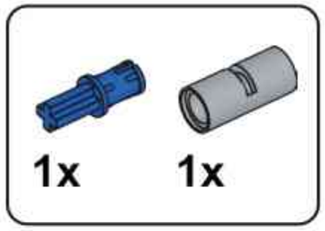

C36

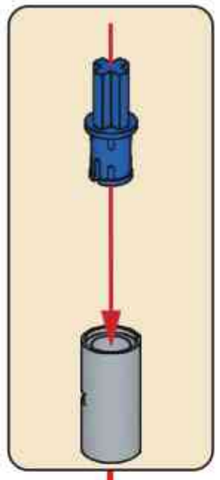

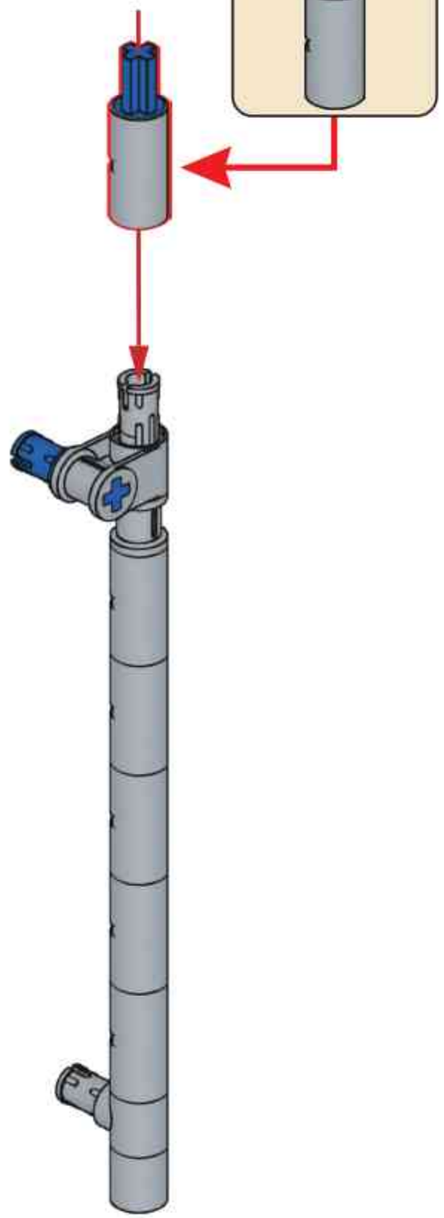

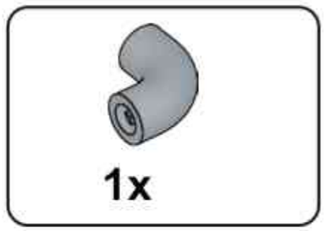

C37

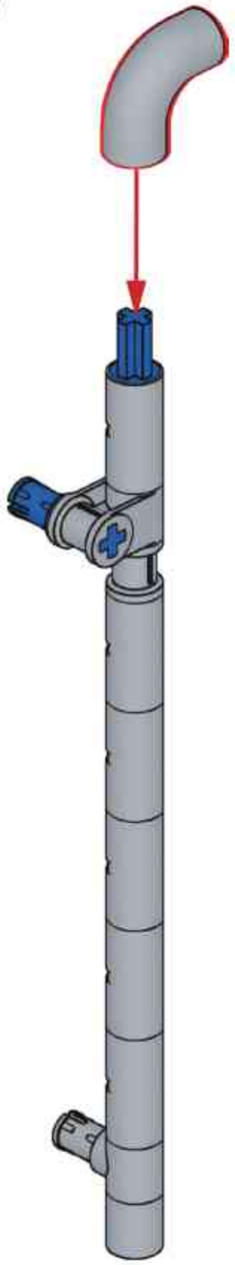

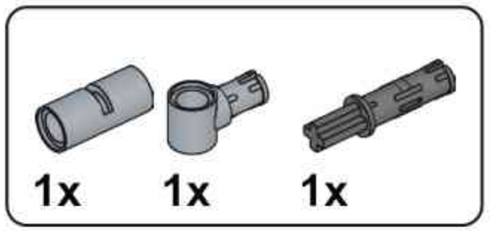

C38

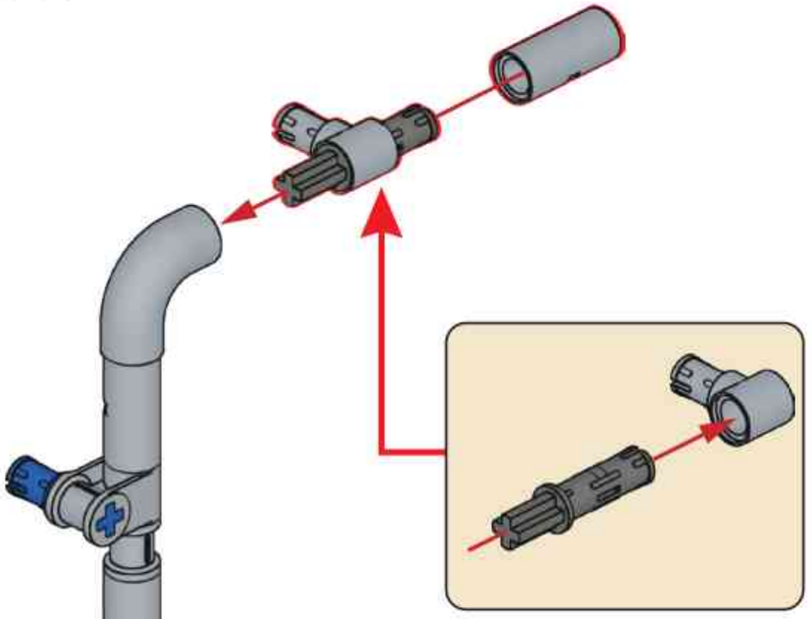

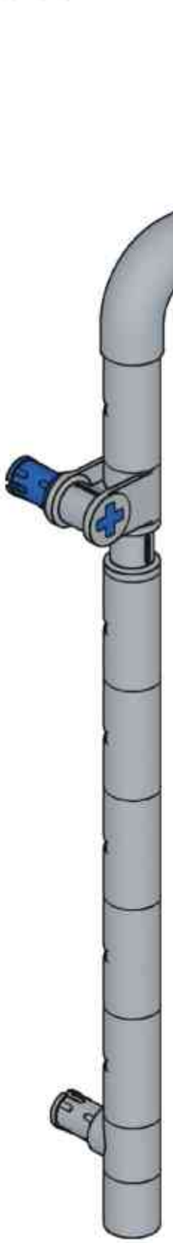

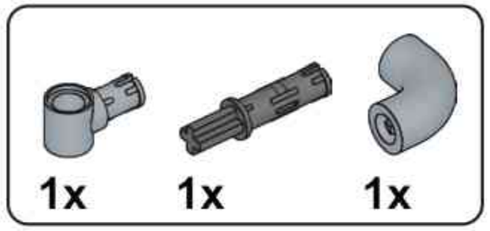

C39

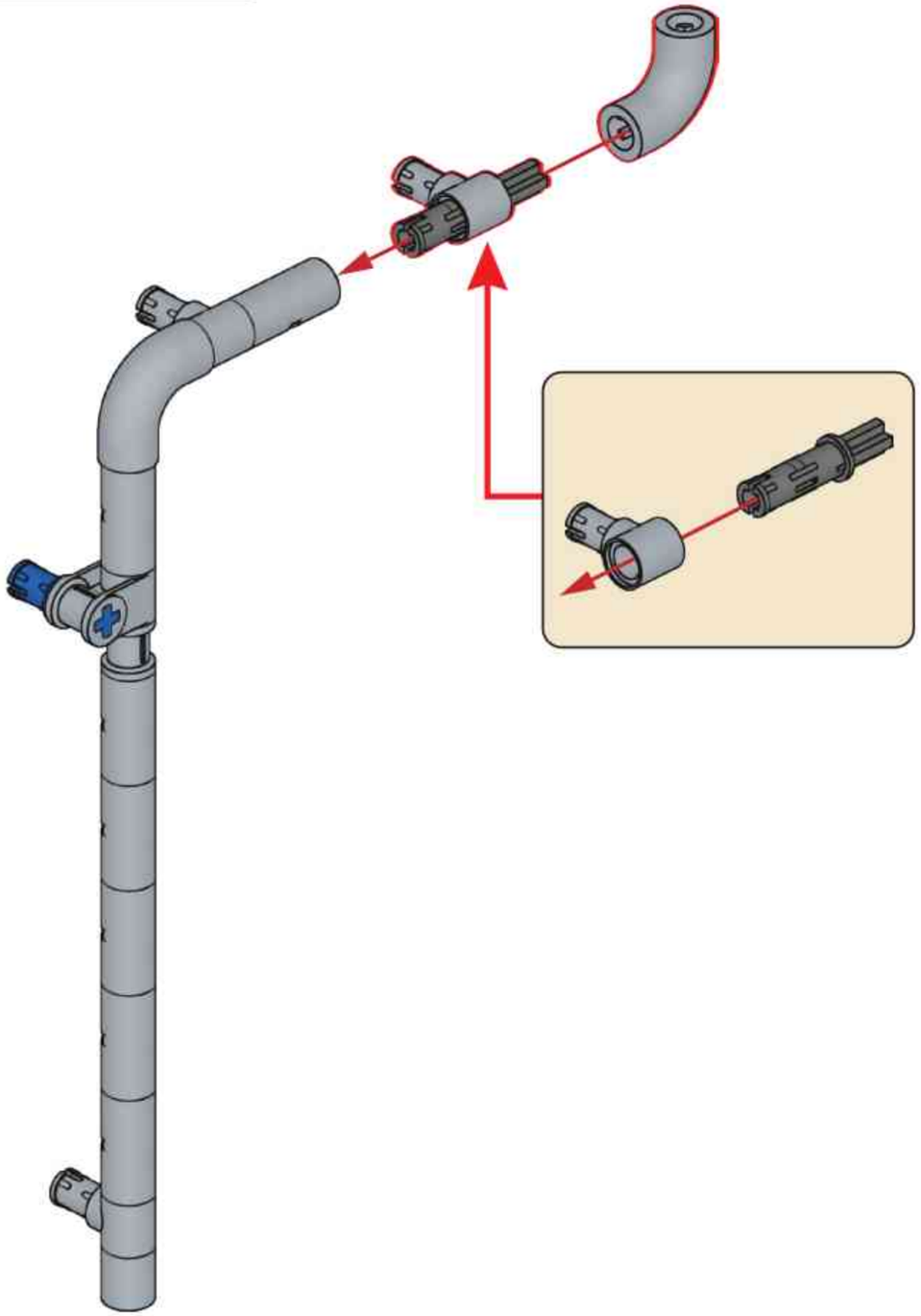

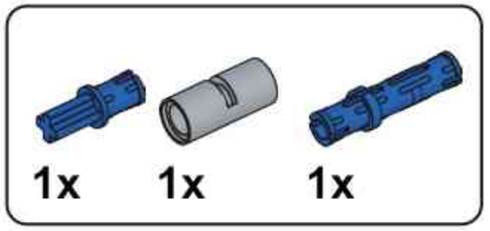

C40

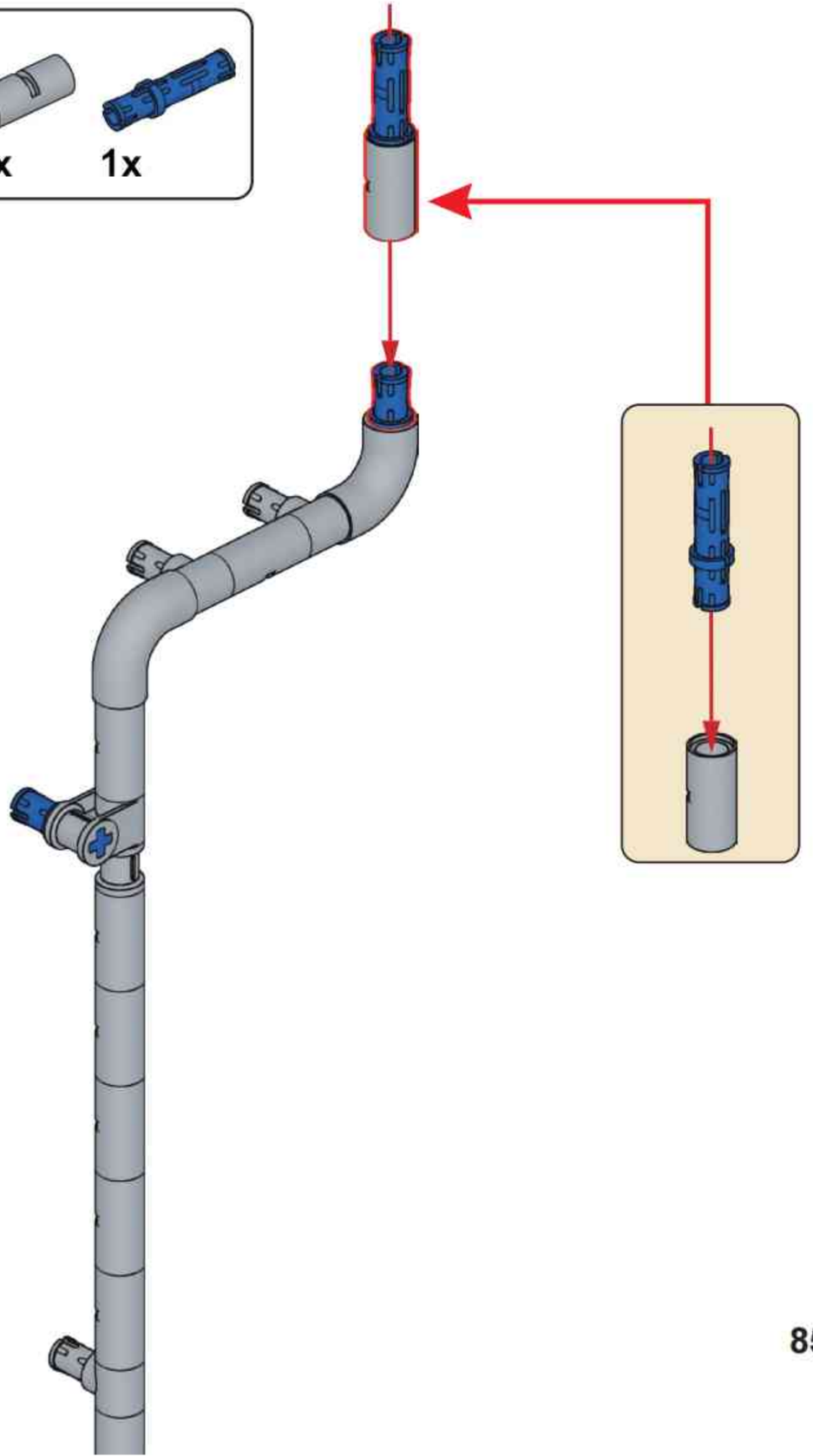

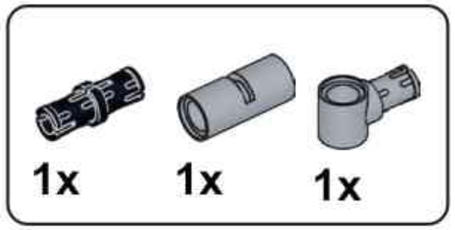

C41

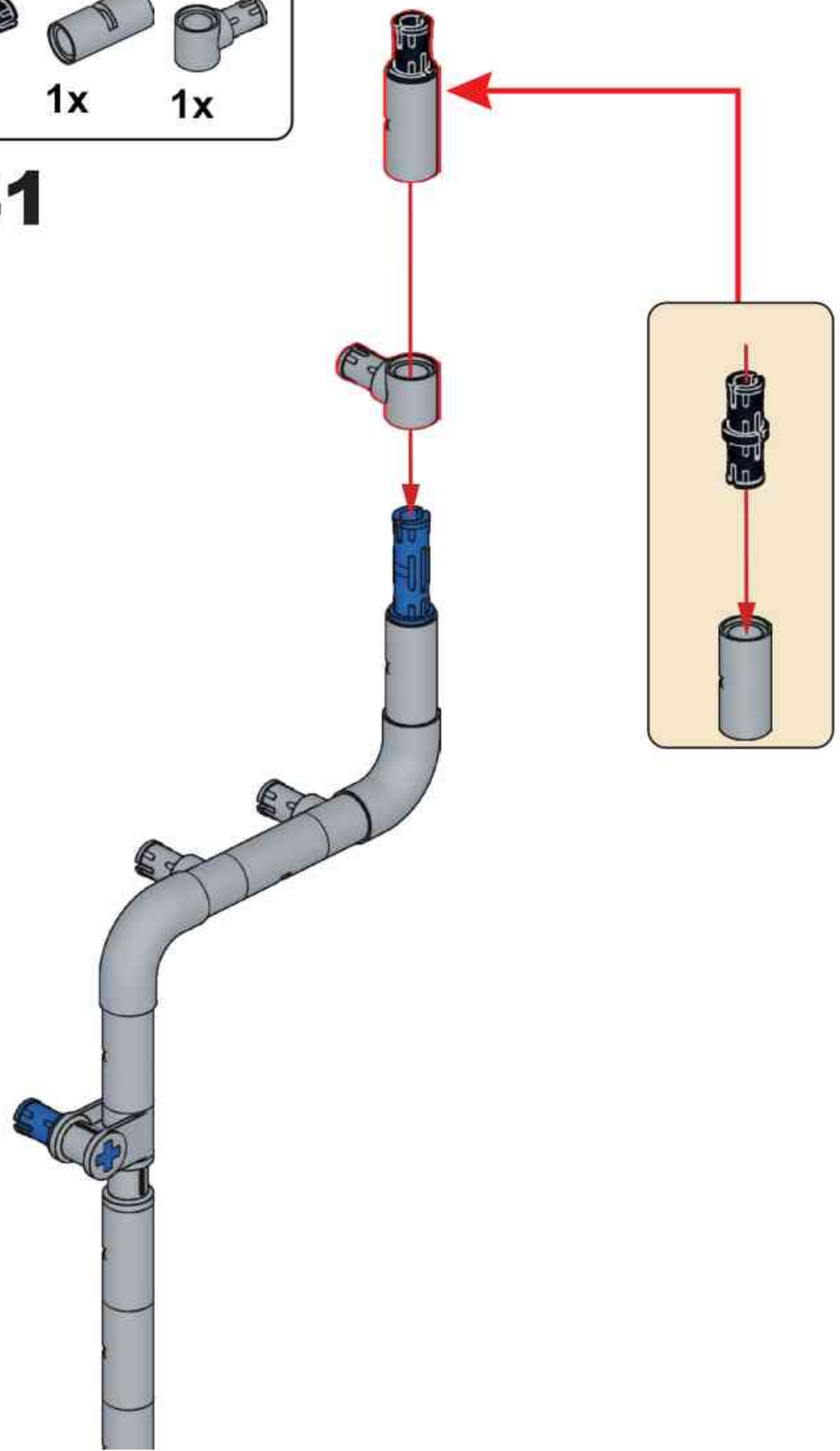

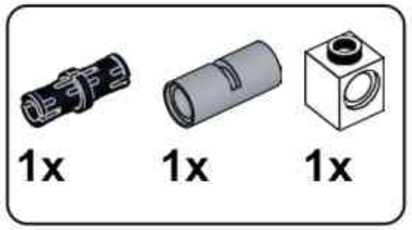

C42

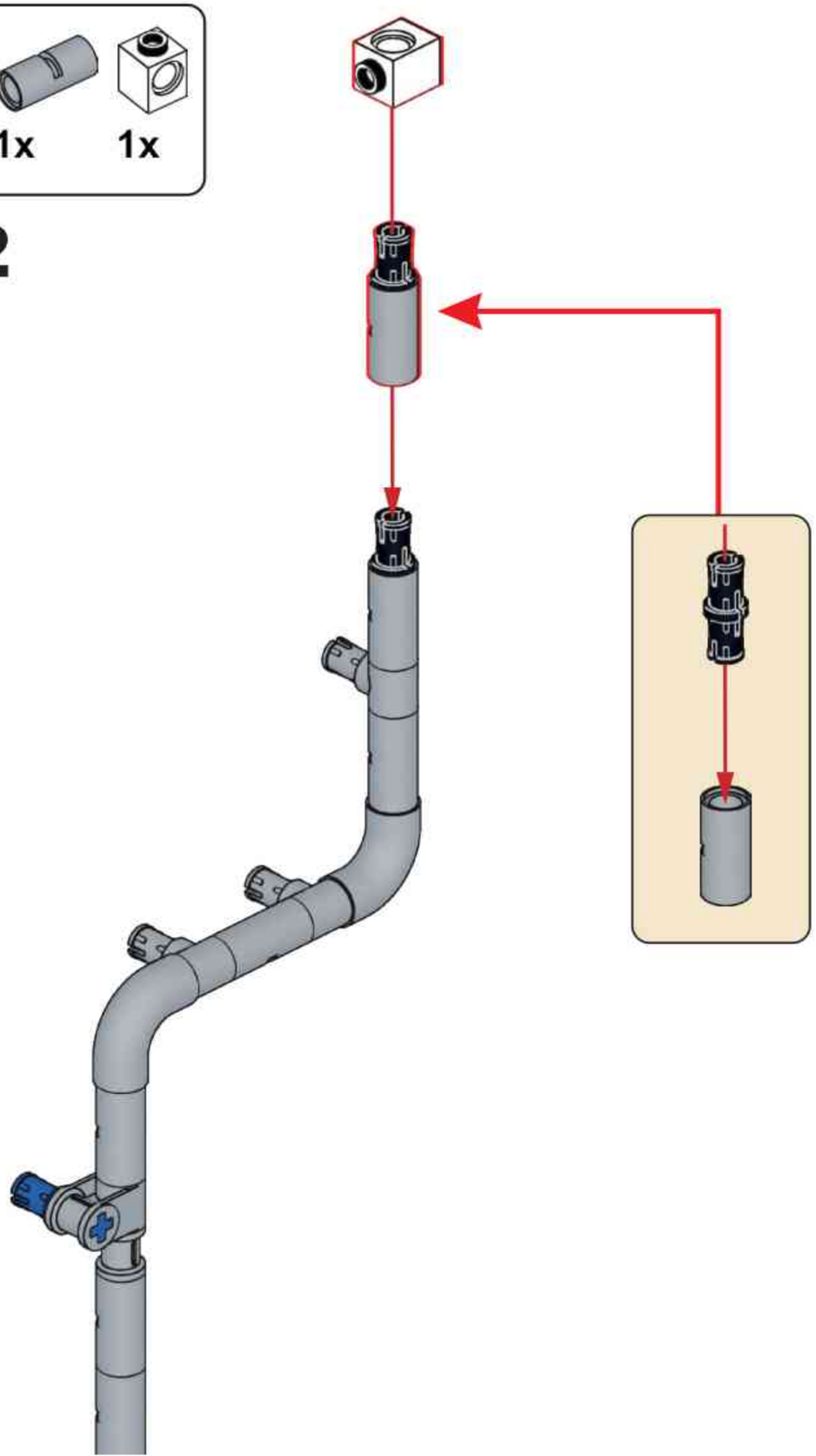

C43

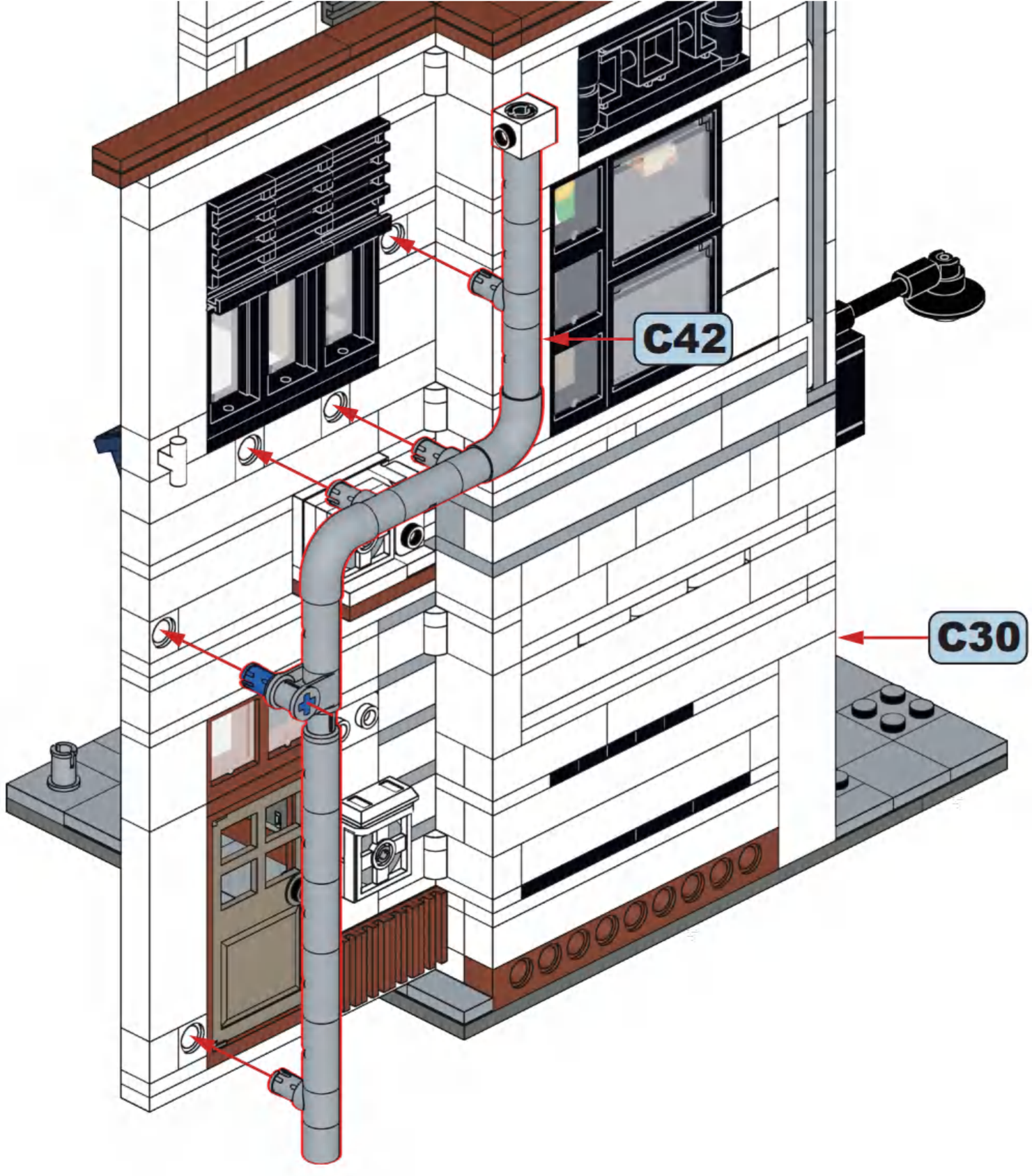

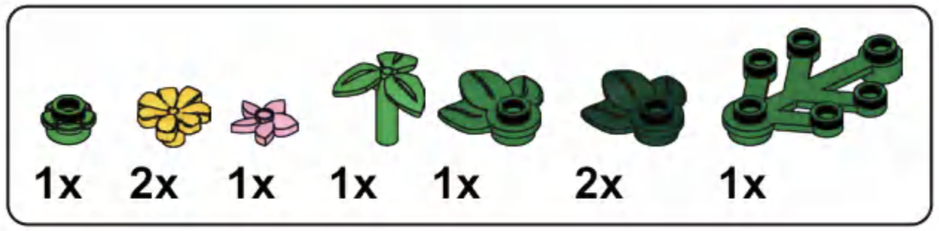

C44

C45

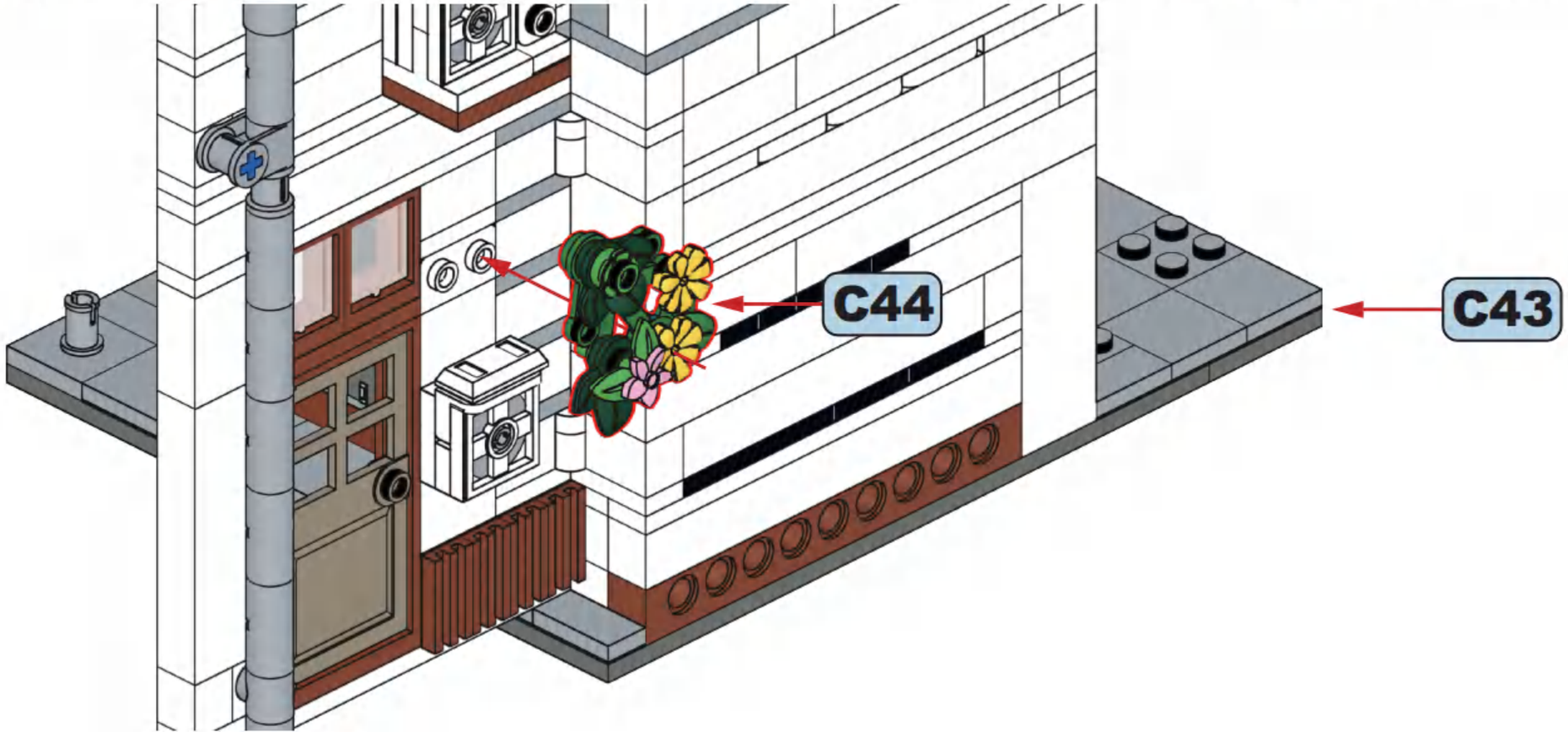

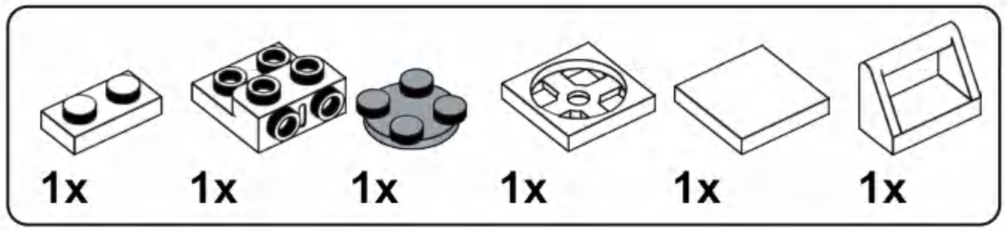

C46

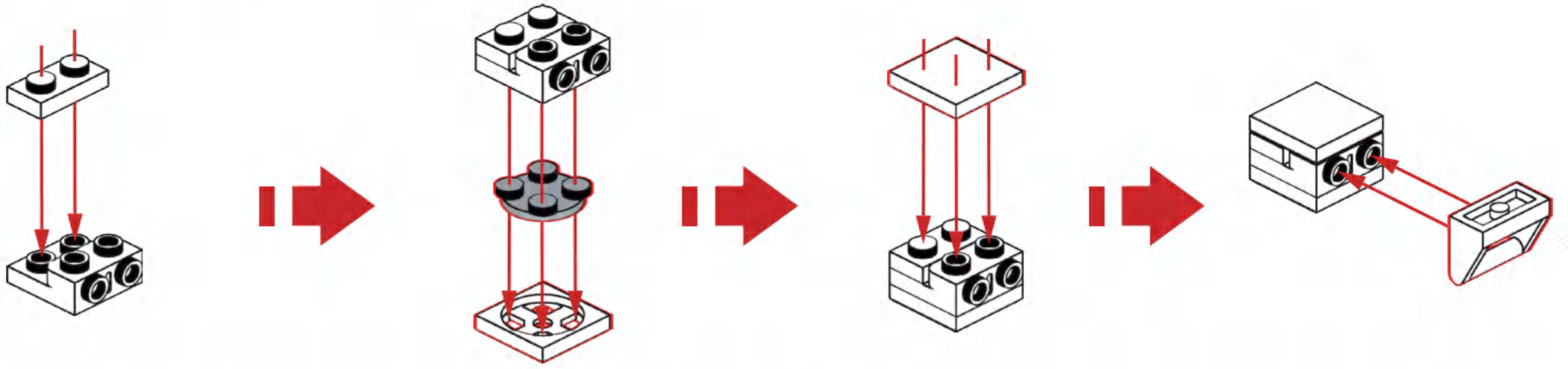

C47

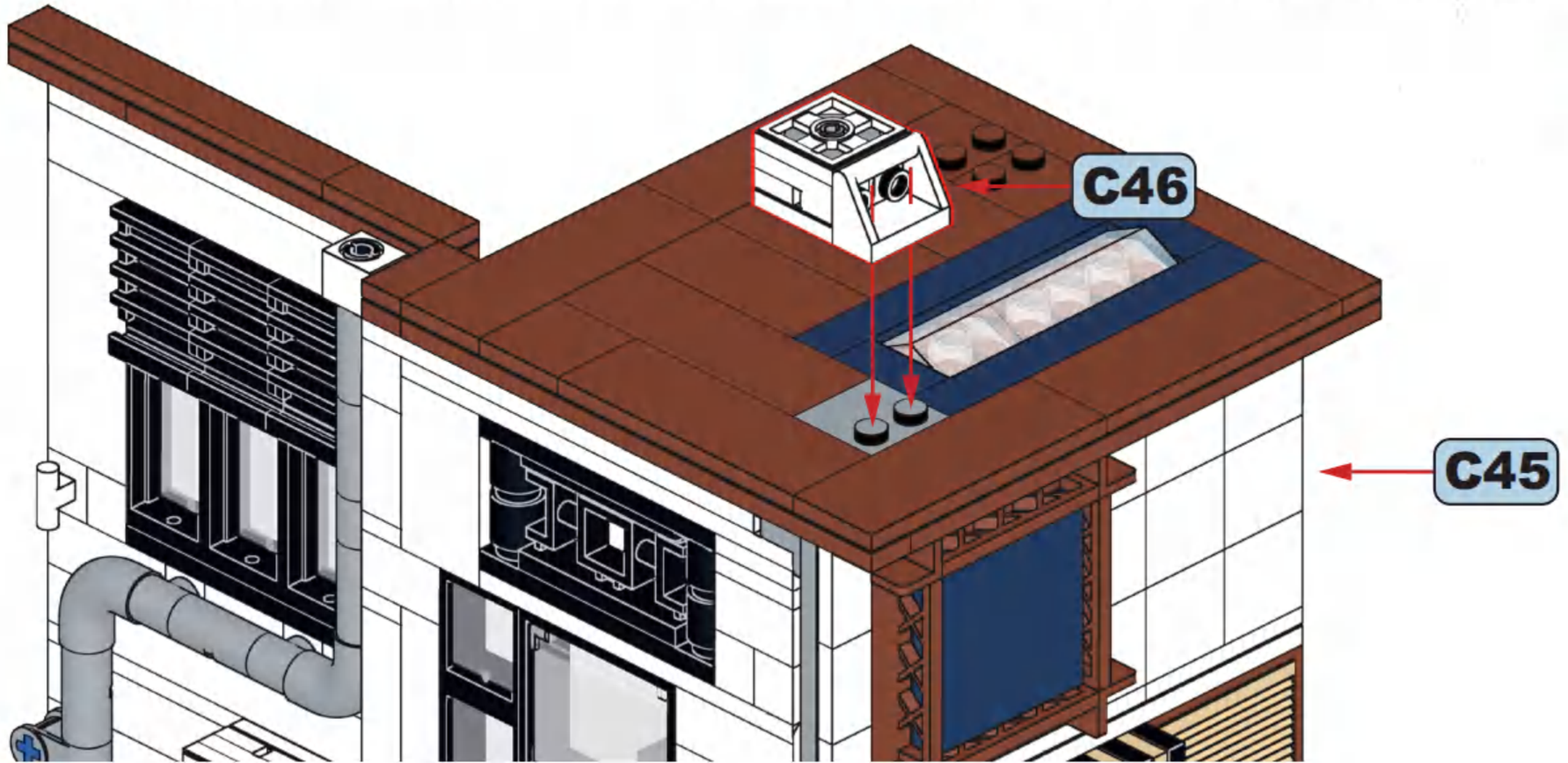

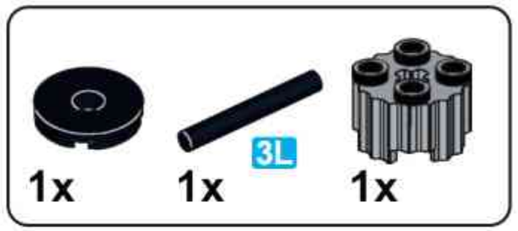

C48

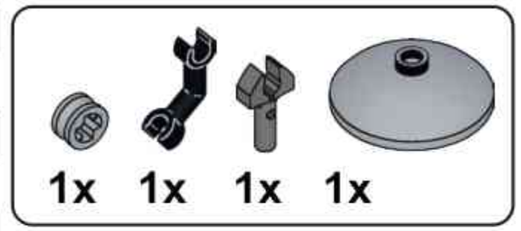

C49

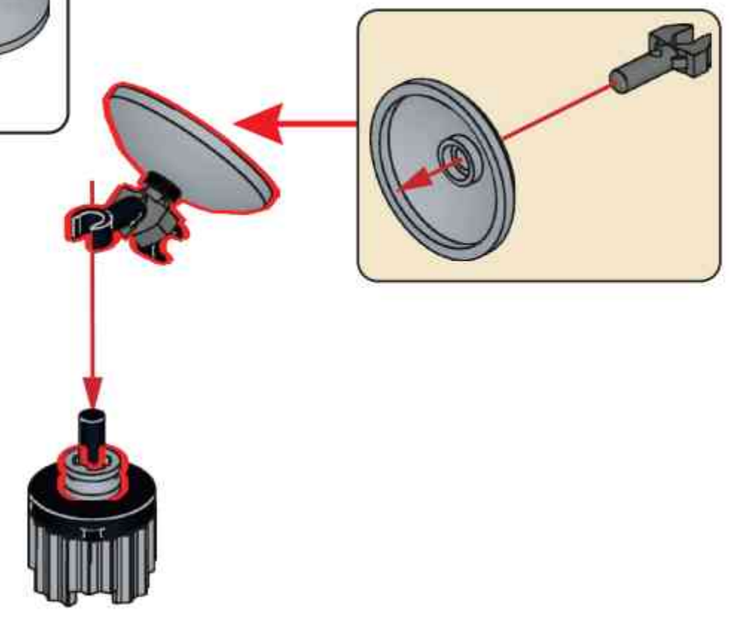

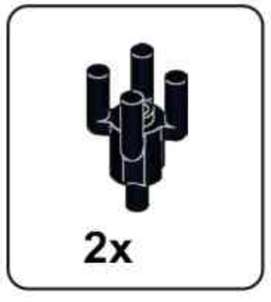

C50

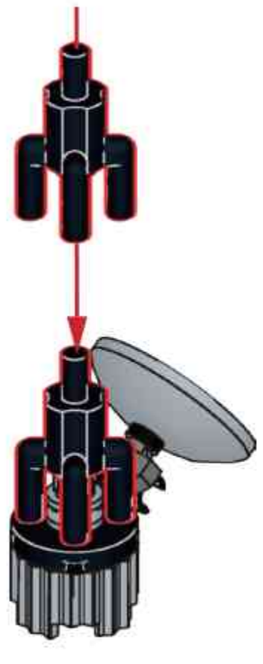

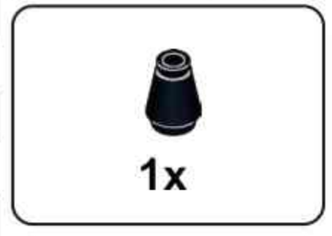

C51

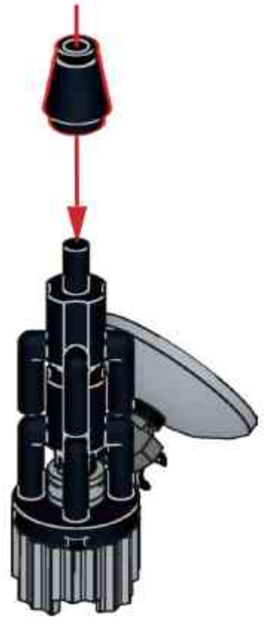

C52

C53

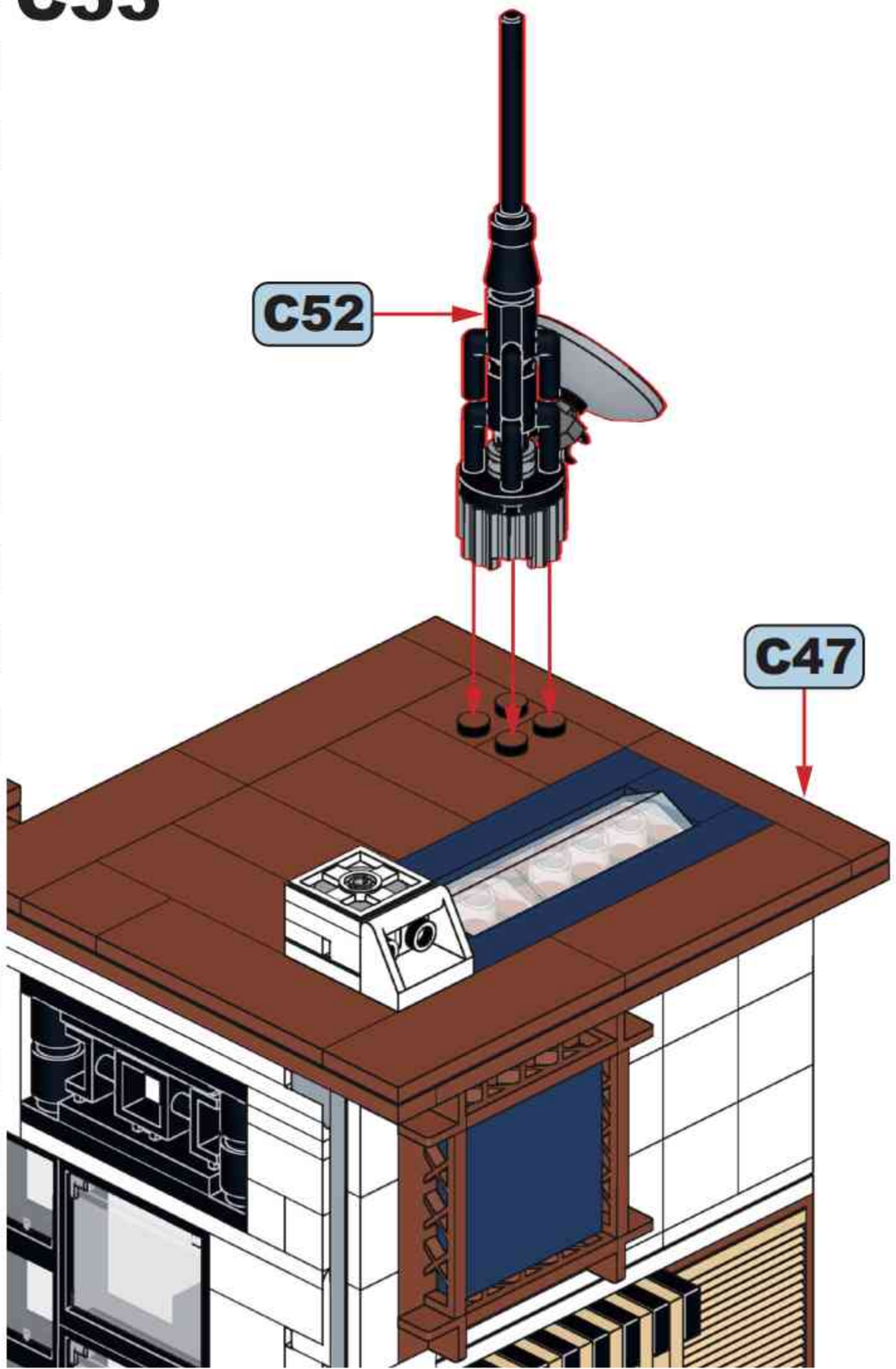

C54

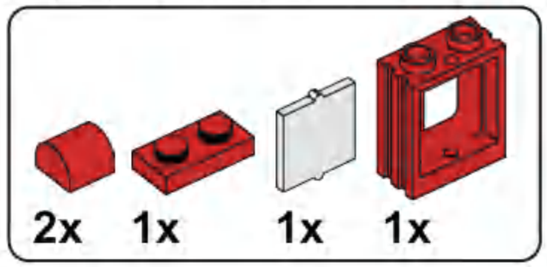

C55

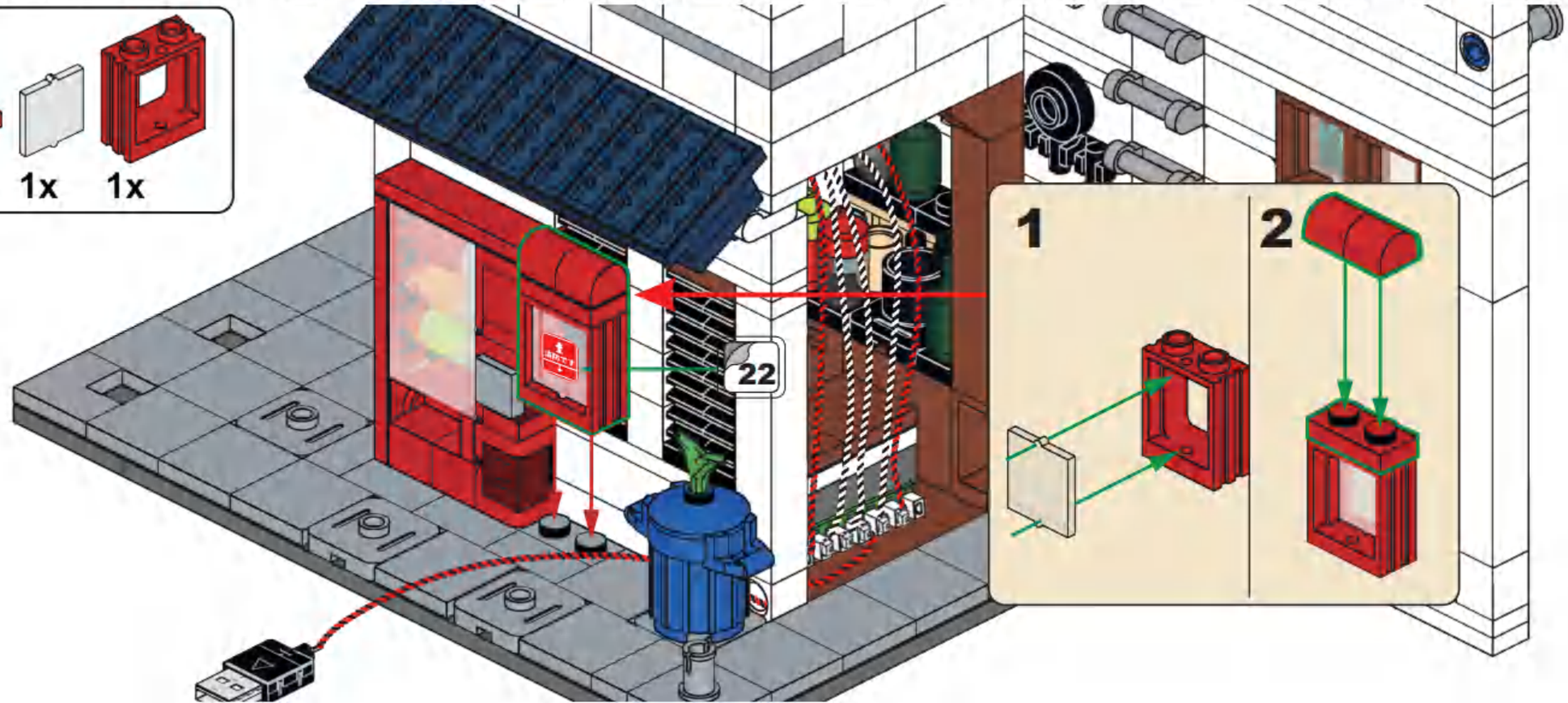

1x 1x 3 2x

C56

3

1:1

2x 1x 1x 1x 1x 1x

C57

1 2 3

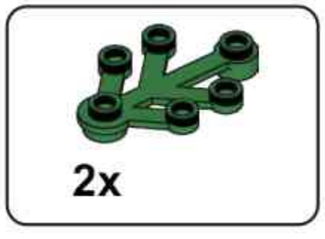

C58

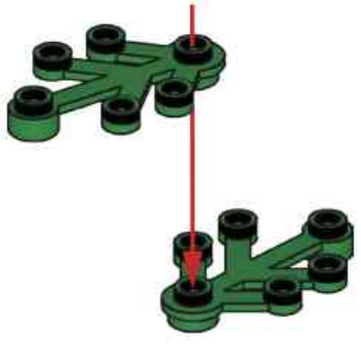

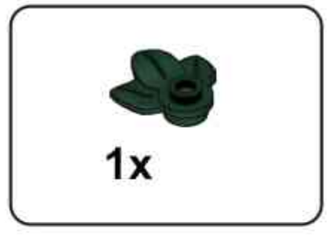

C59

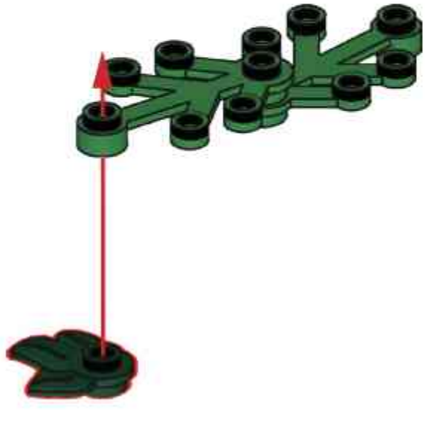

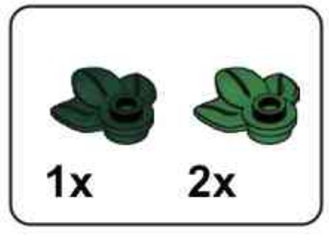

C60

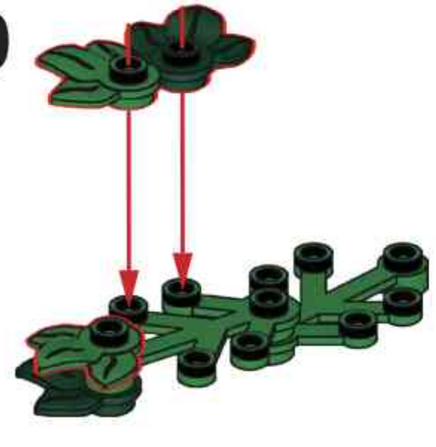

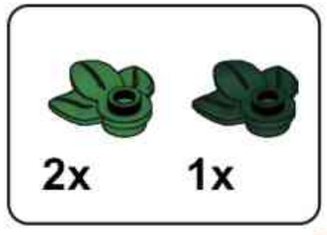

C61

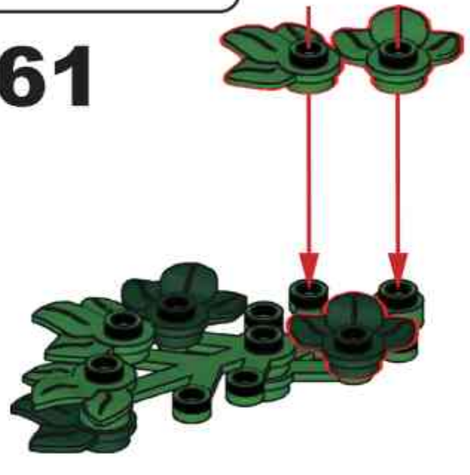

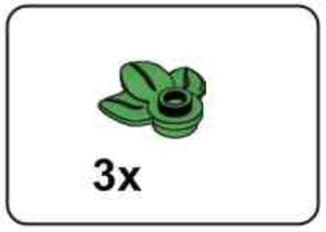

C62

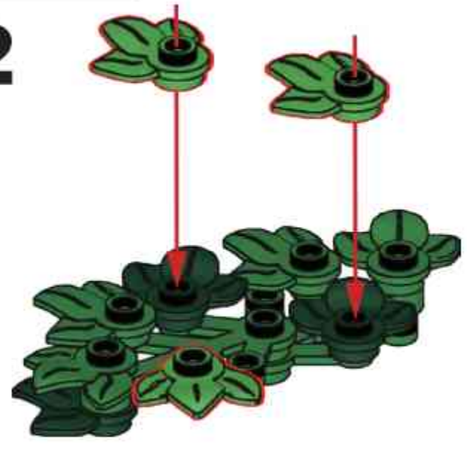

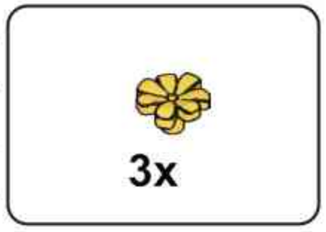

C63

1x 2x

C64

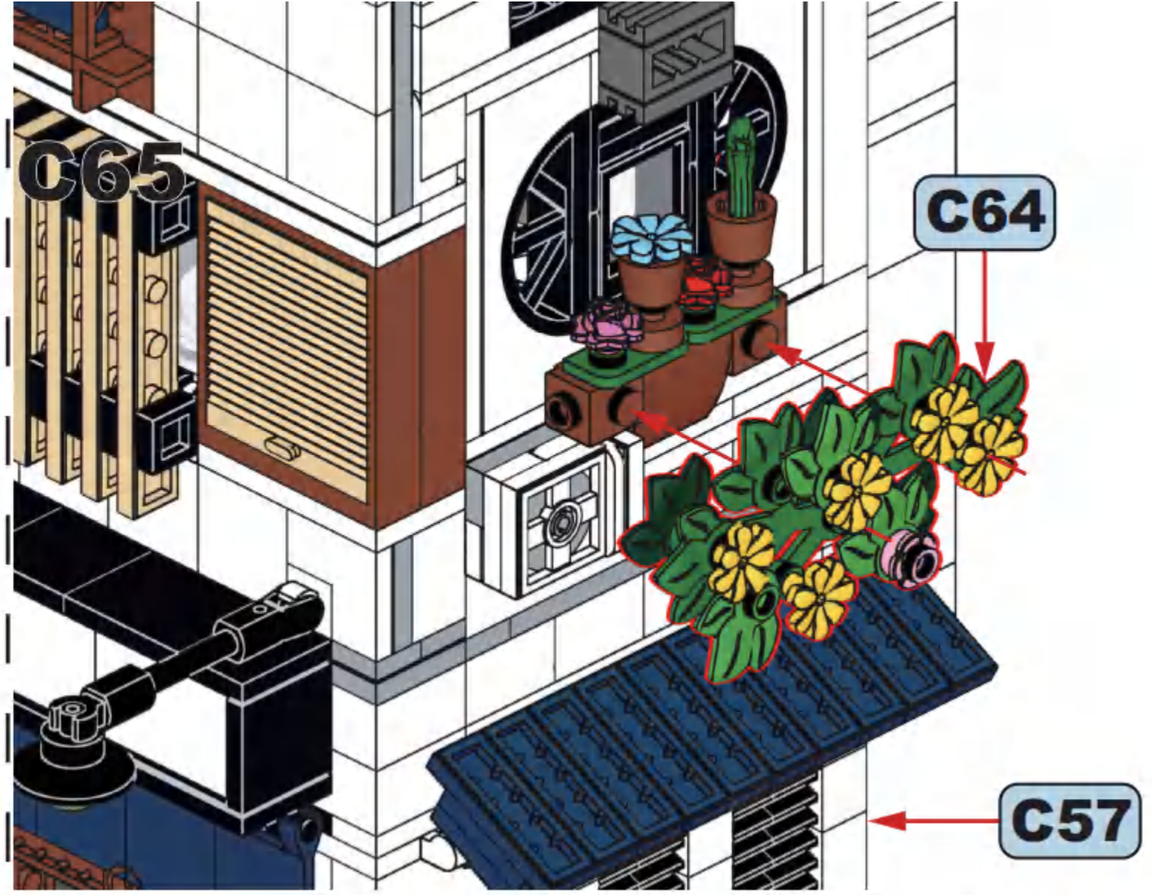

1x 1x 1x

C66

2x 1x 1x

C67

2x

C68

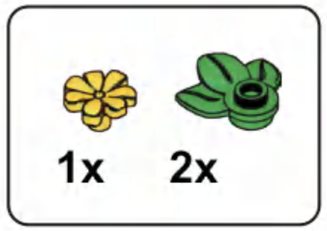

C69

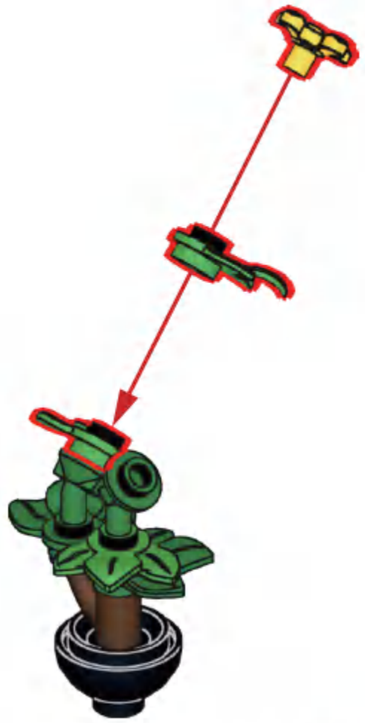

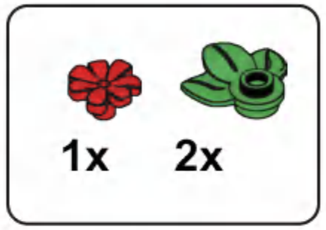

C70

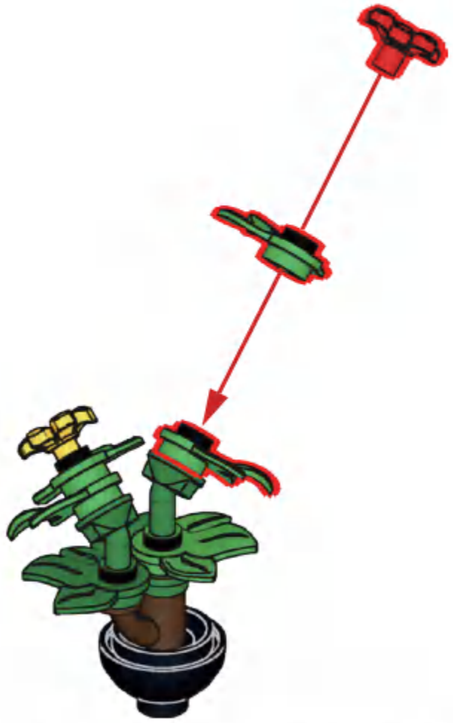

C71

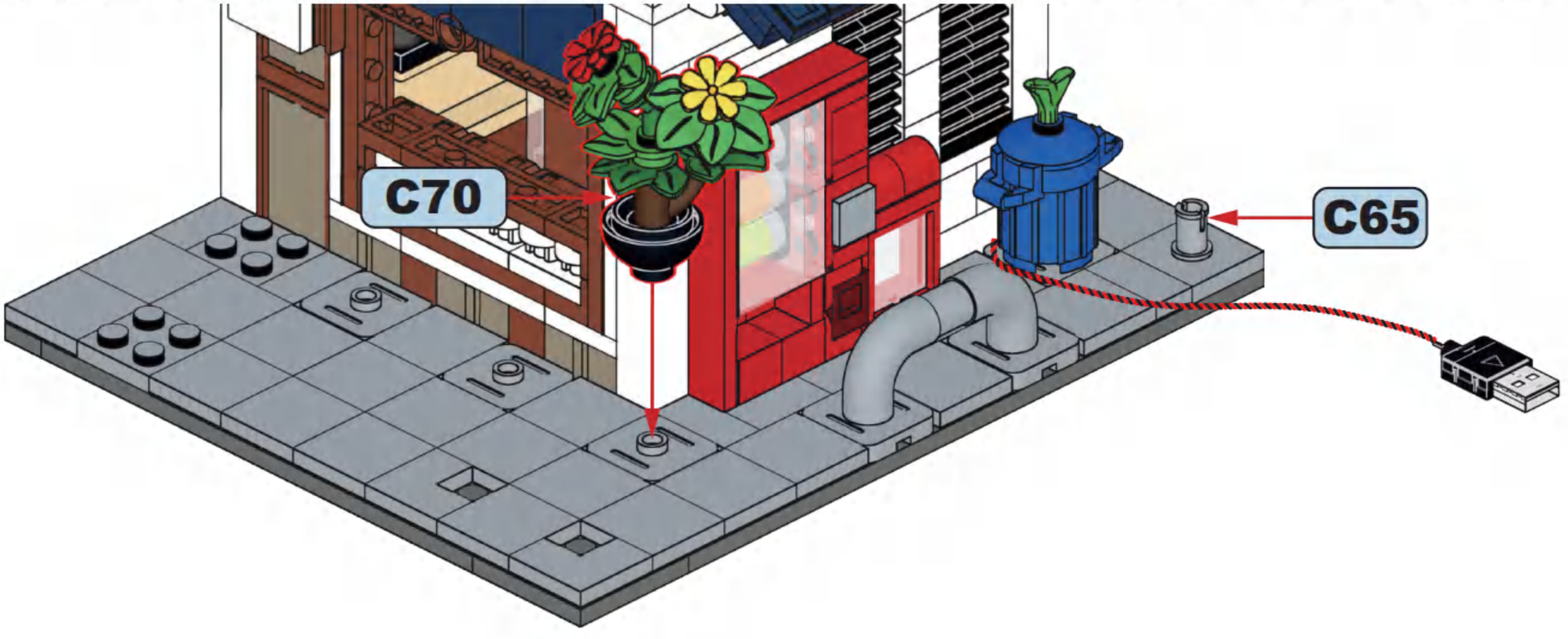

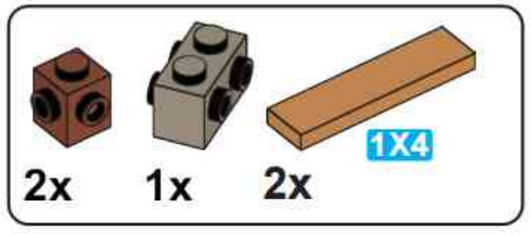

C72

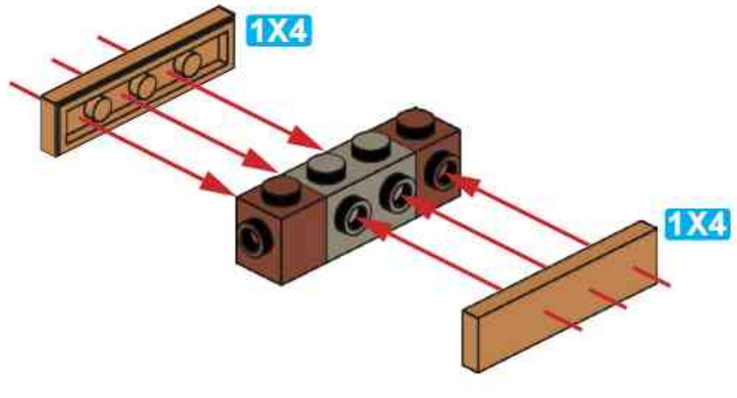

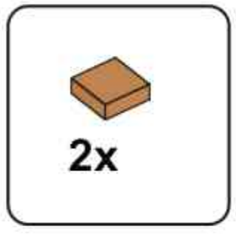

C73

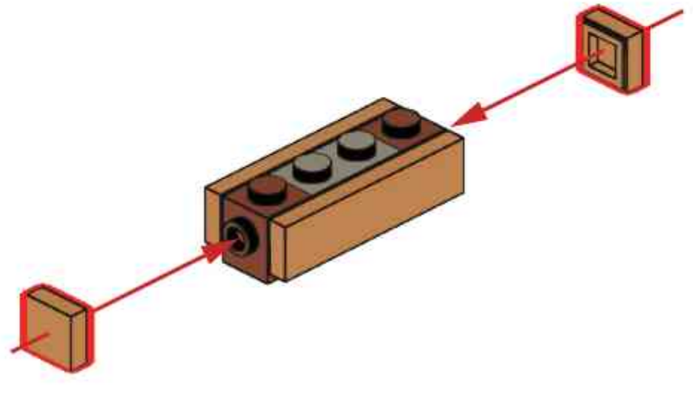

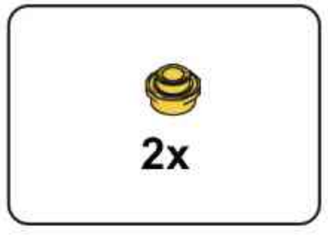

C74

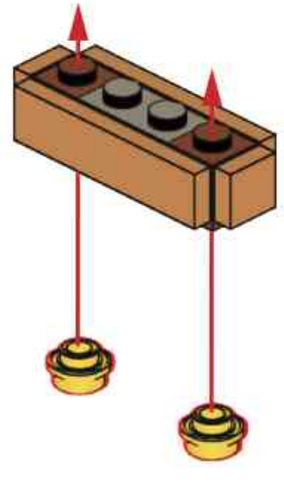

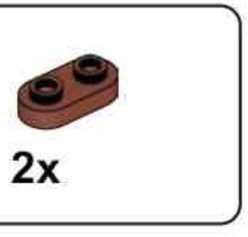

C75

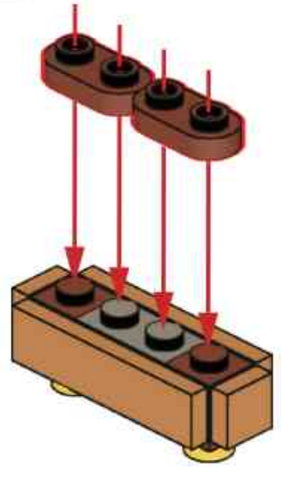

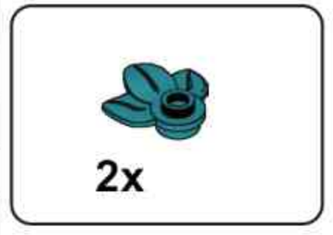

C76

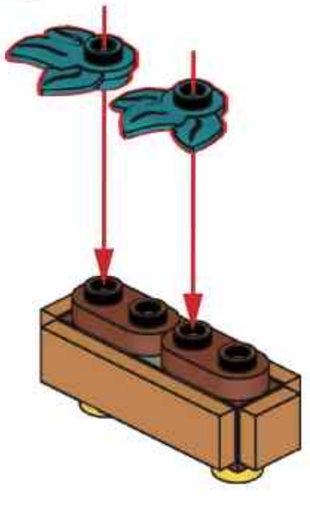

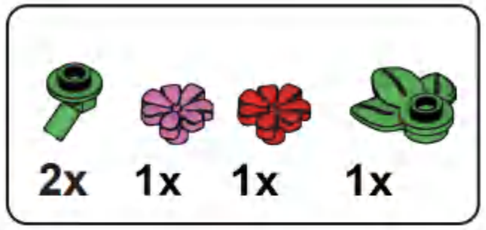

C77

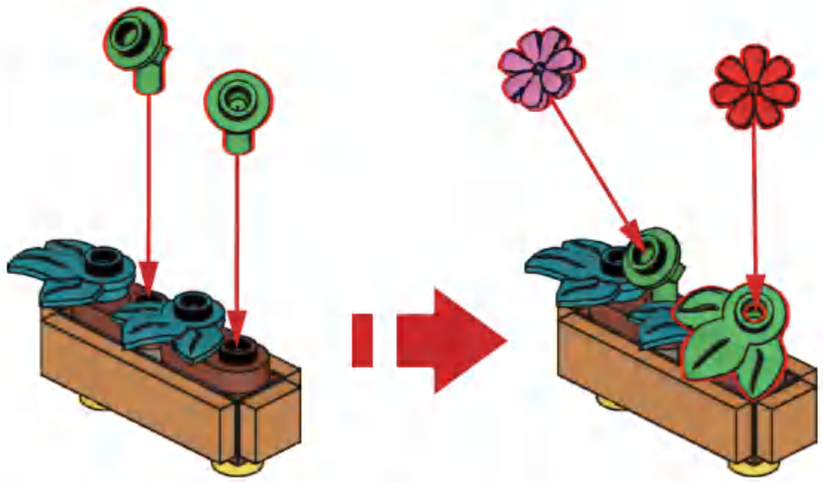

C78

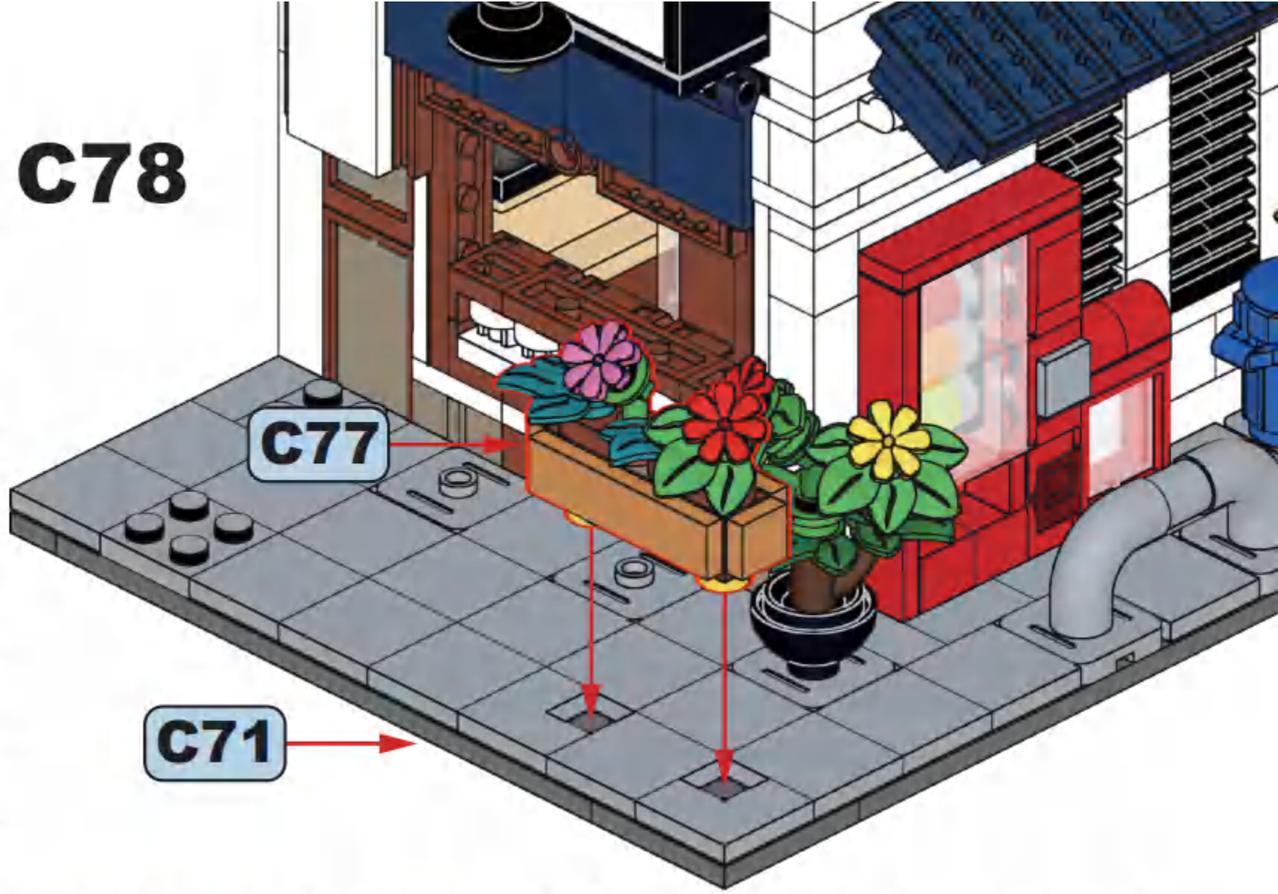

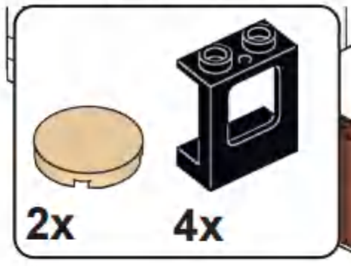

C79

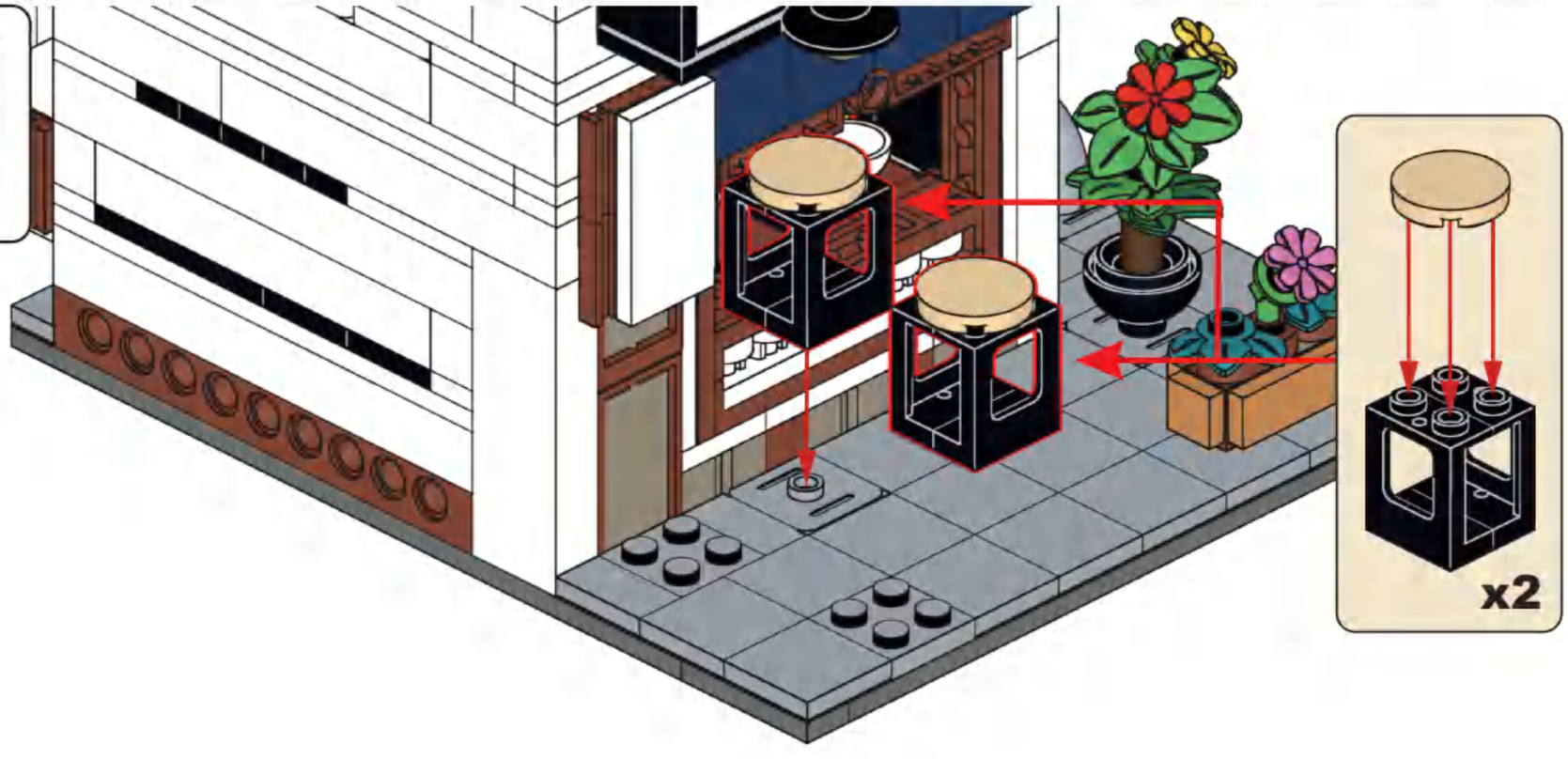

C80

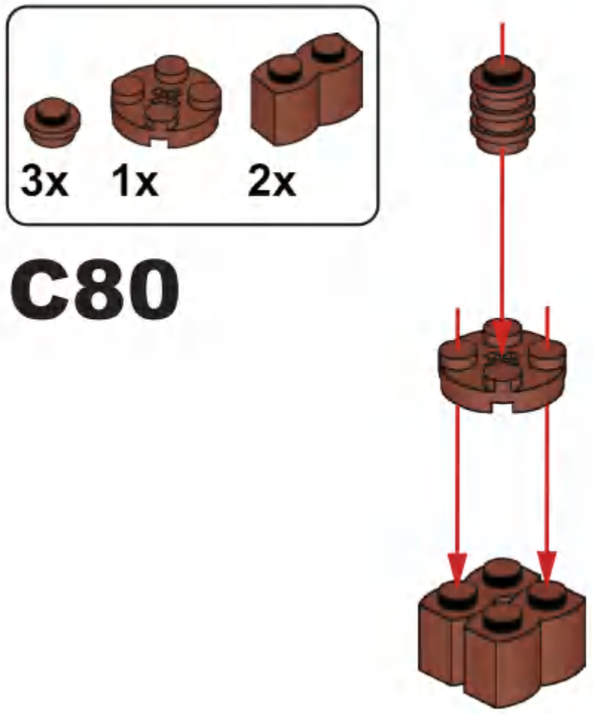

C81

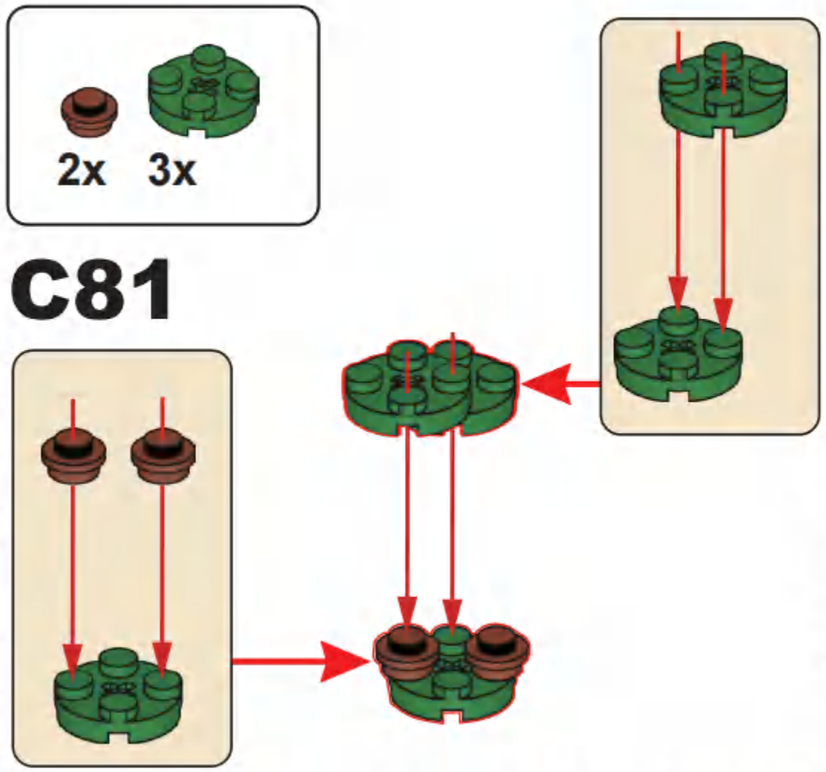

C82

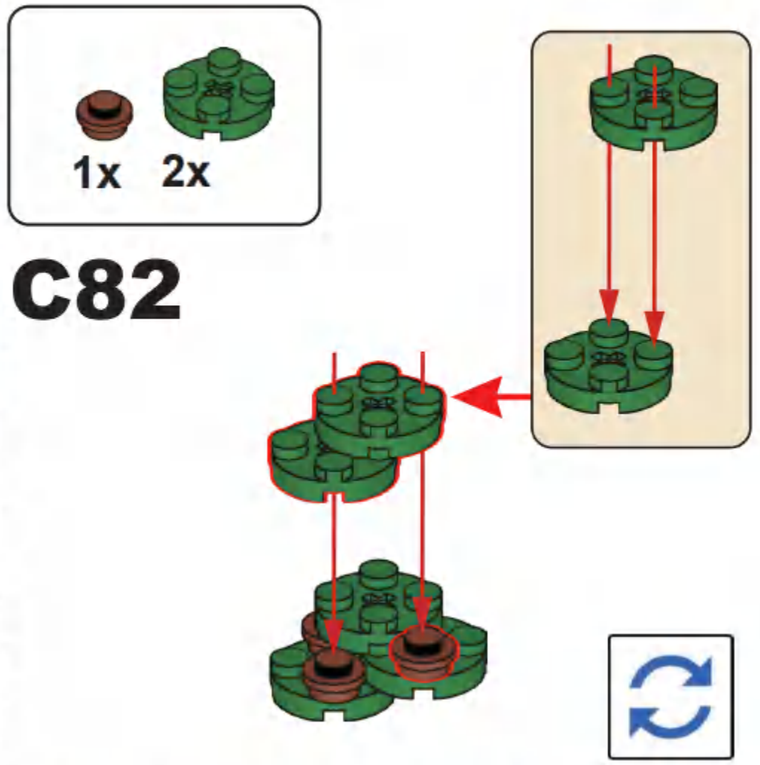

C83

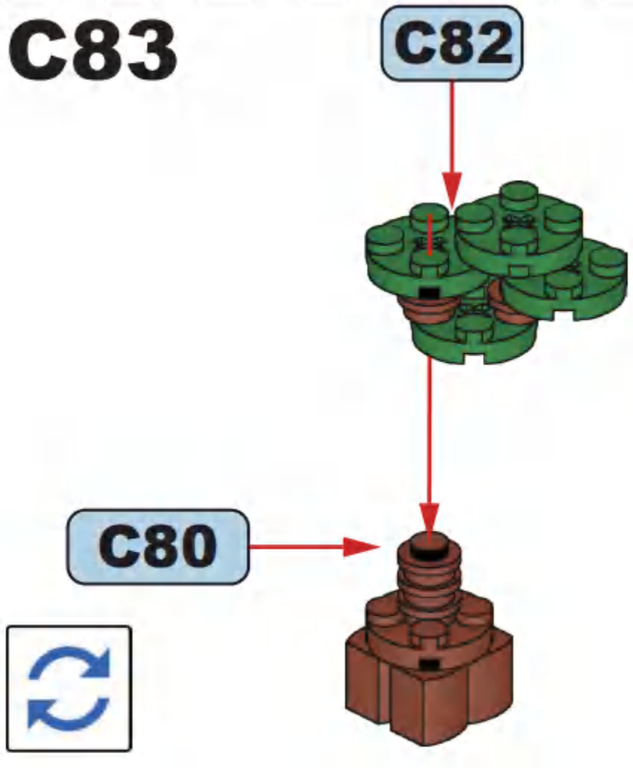

C84

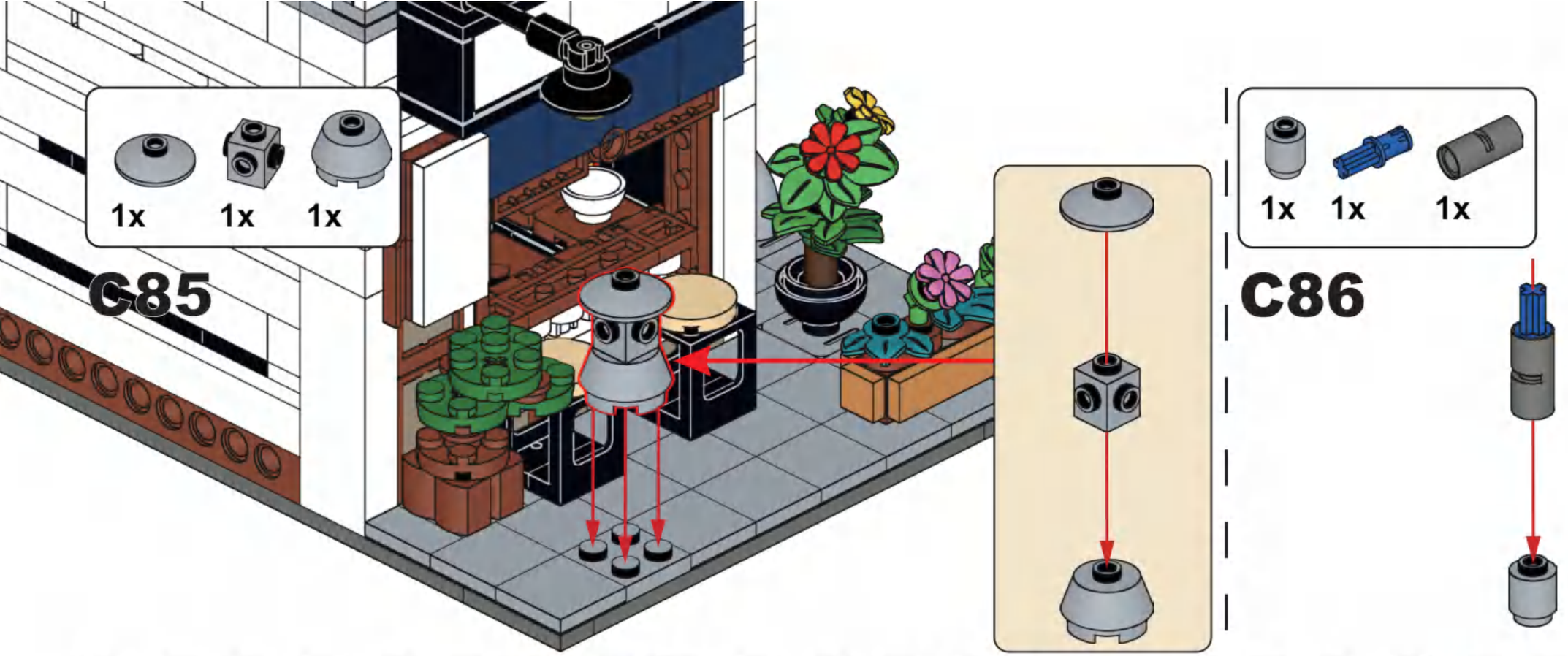
1x
1x
1x
C85

1x
1x
1x
C86

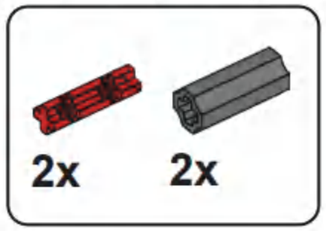
2x
2x
C87

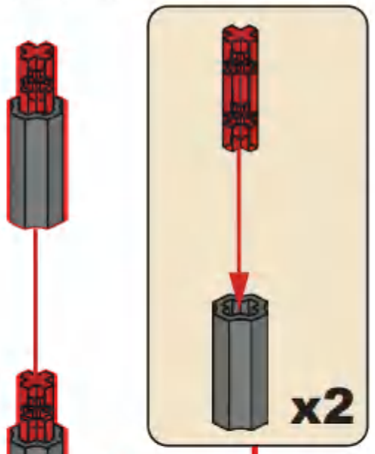
x2

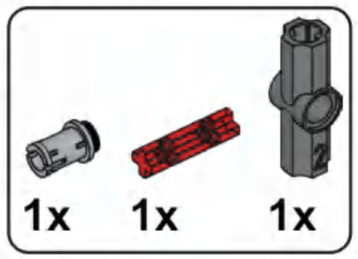
1x
1x
1x
C88

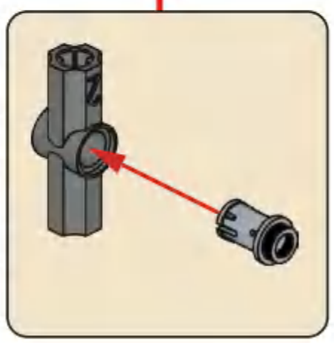

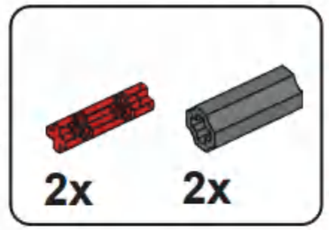
2x
2x
C89

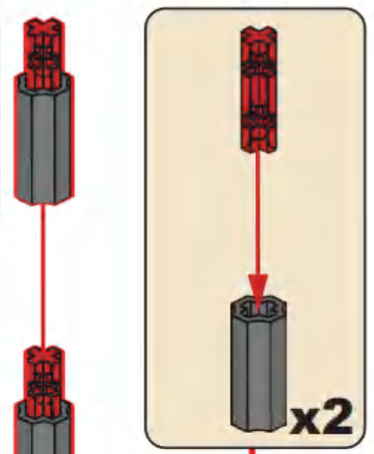
x2

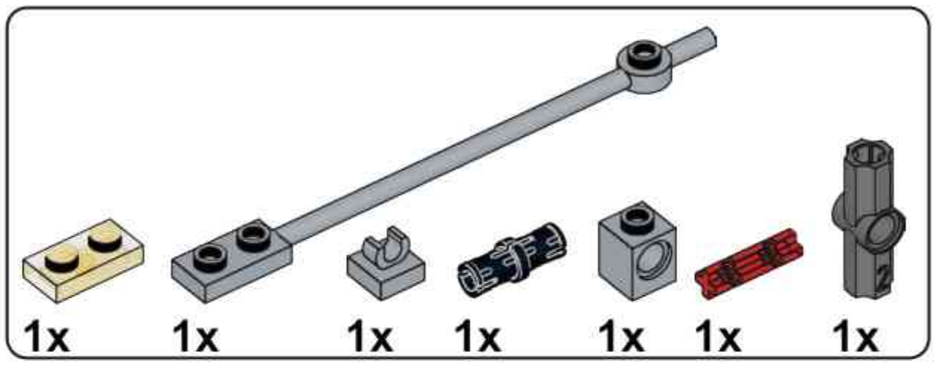

C90

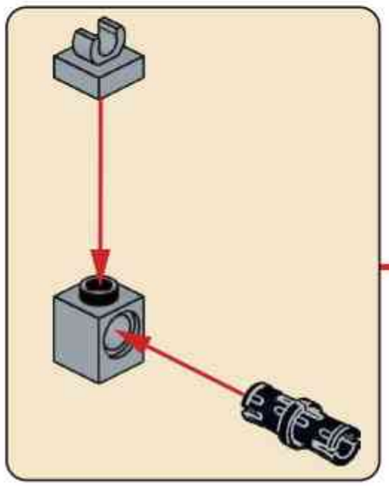

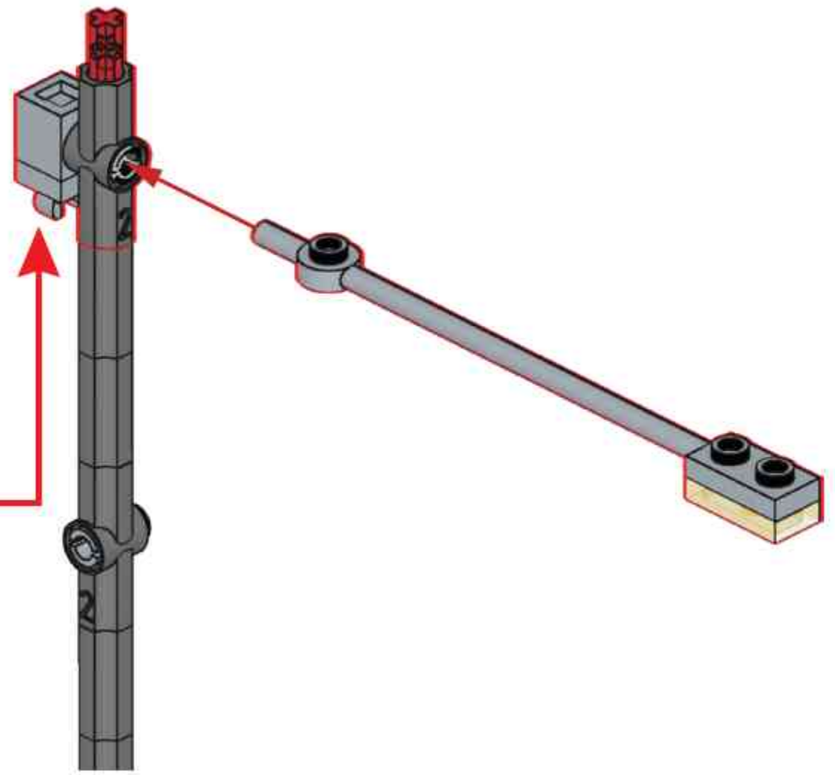

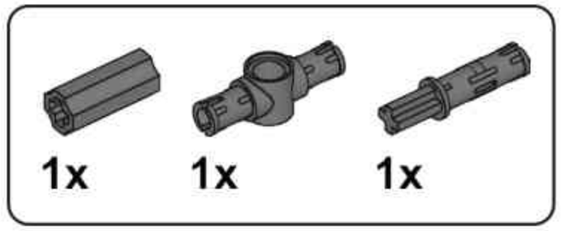

C91

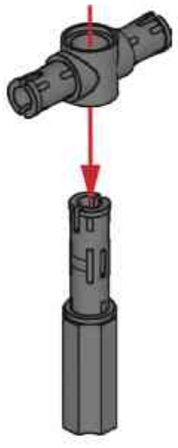

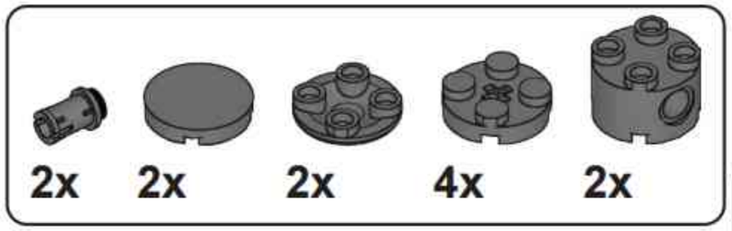

C92

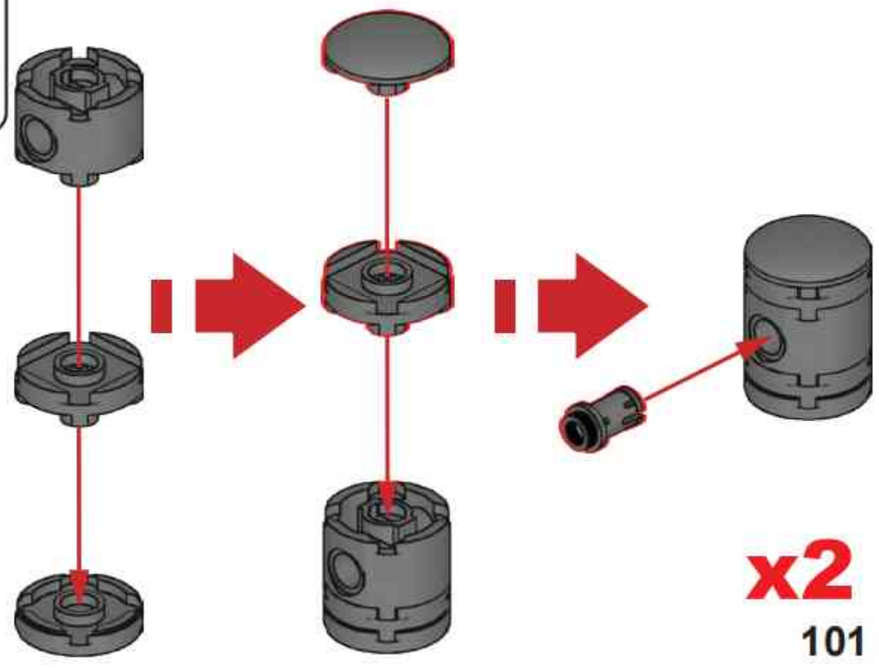

C93

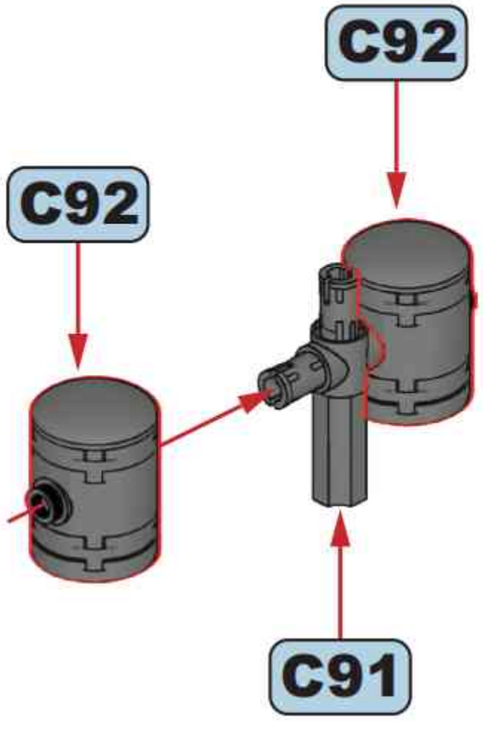

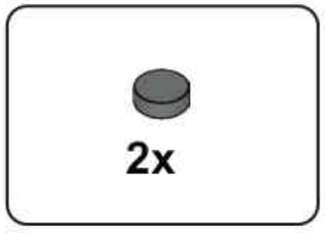

C94

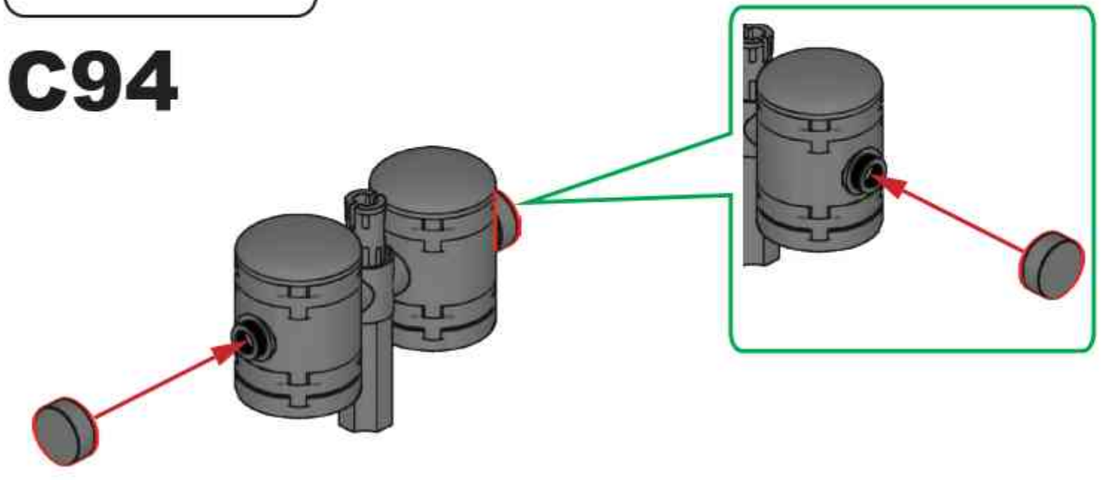

C95

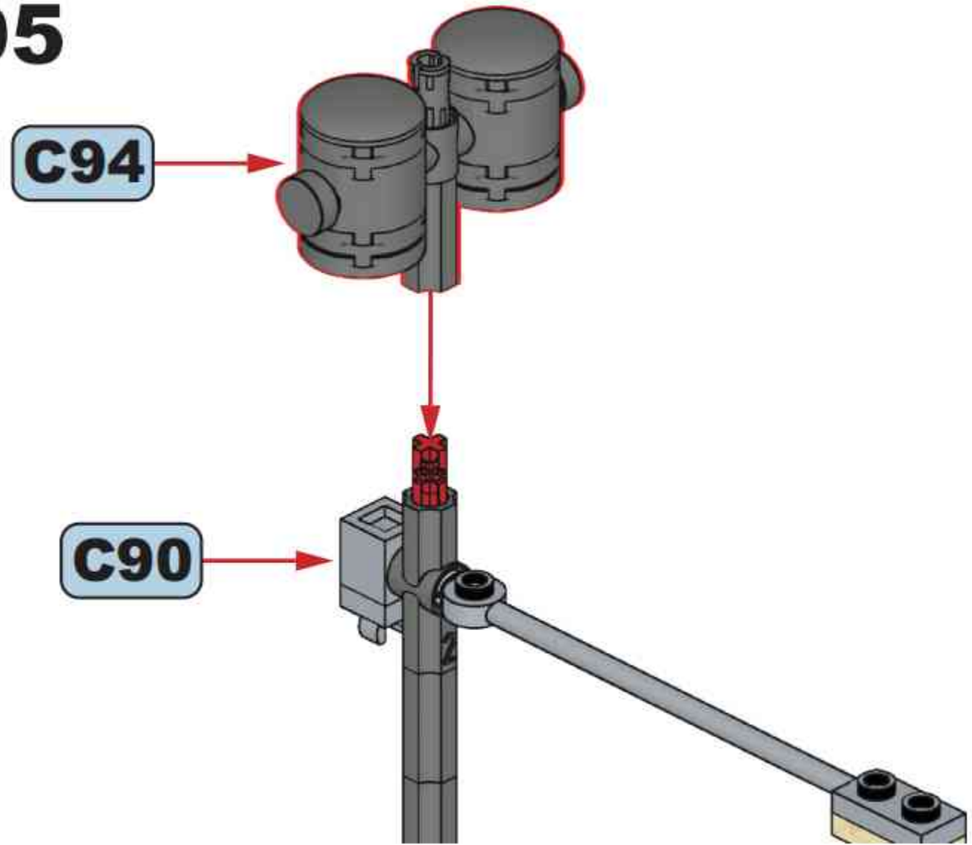

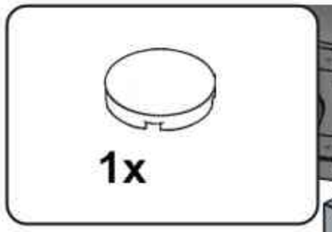

C96

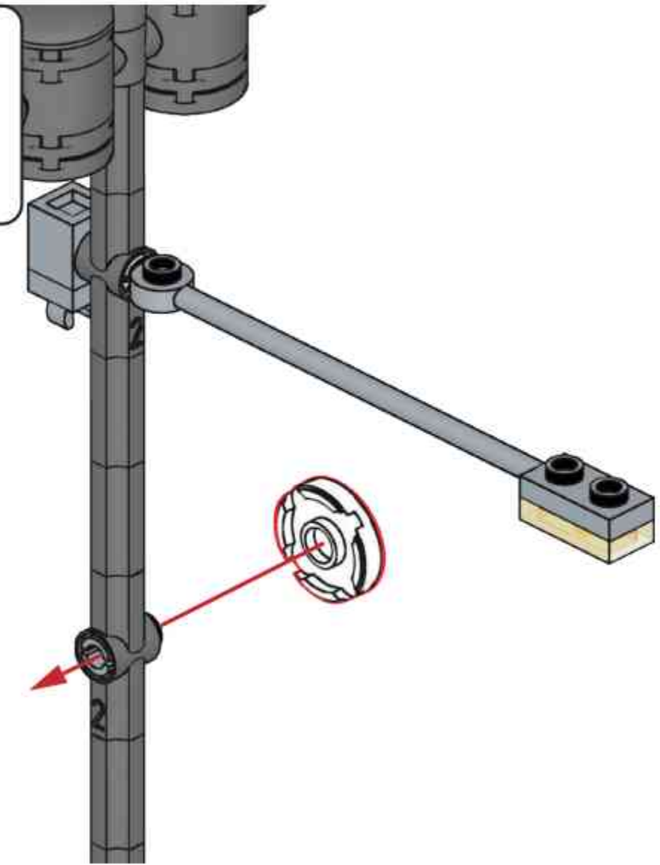

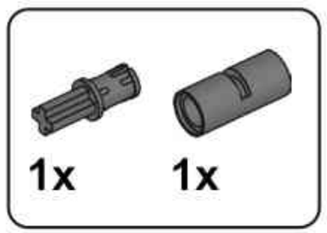

C97

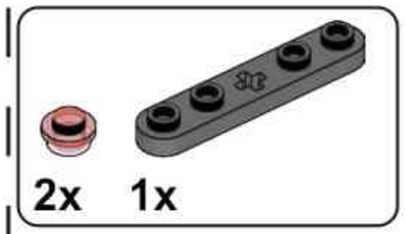

C98

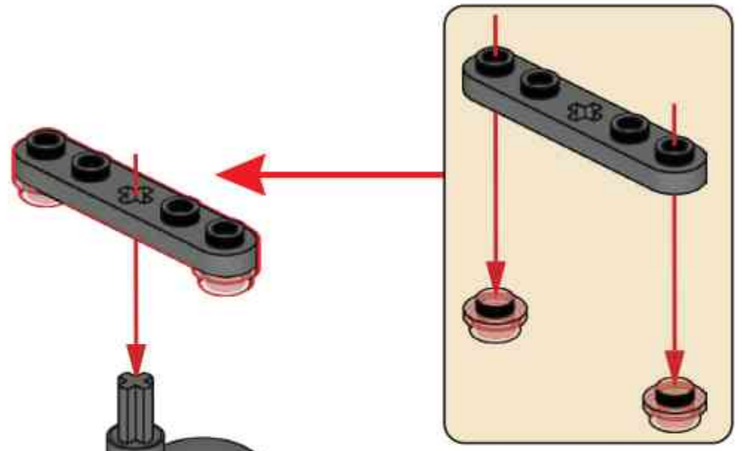

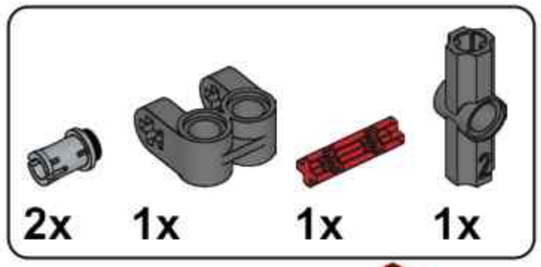

C99

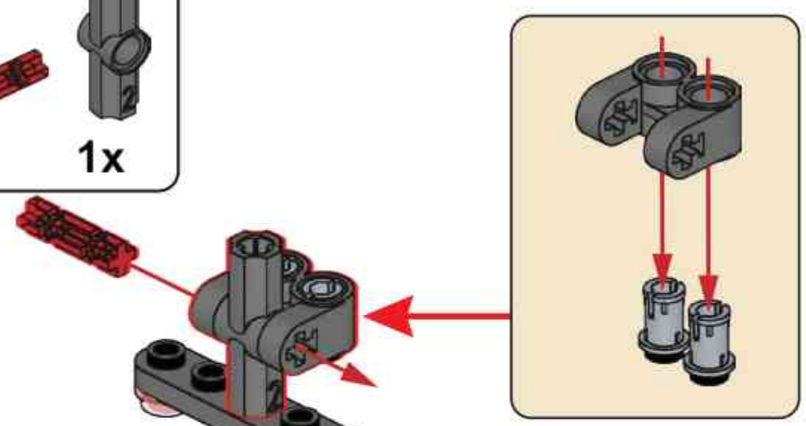

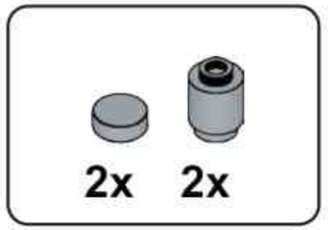

C100

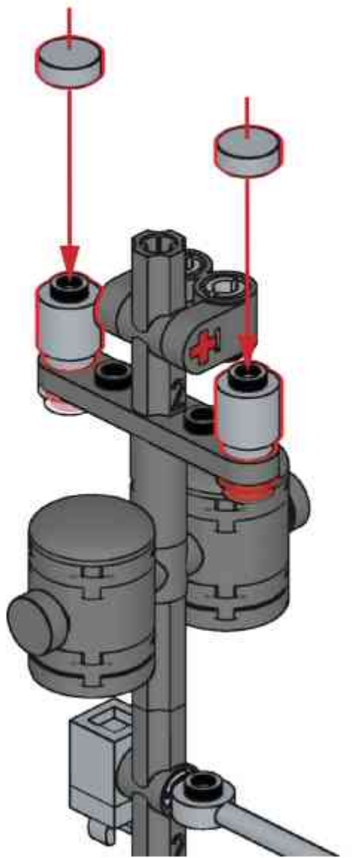

2x 2x 2x 1x

C101

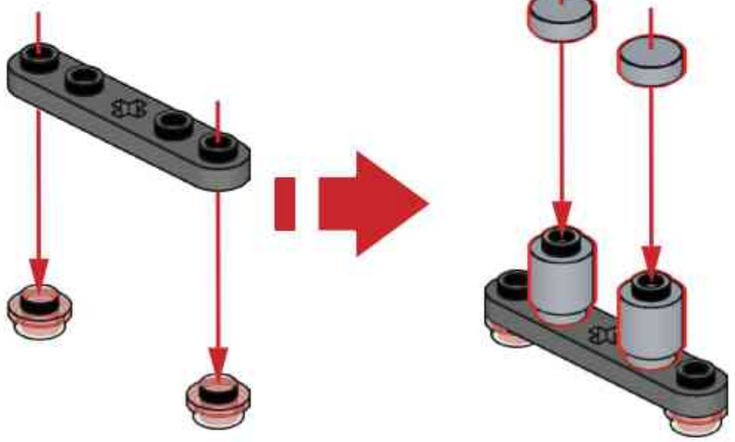

1x

C102

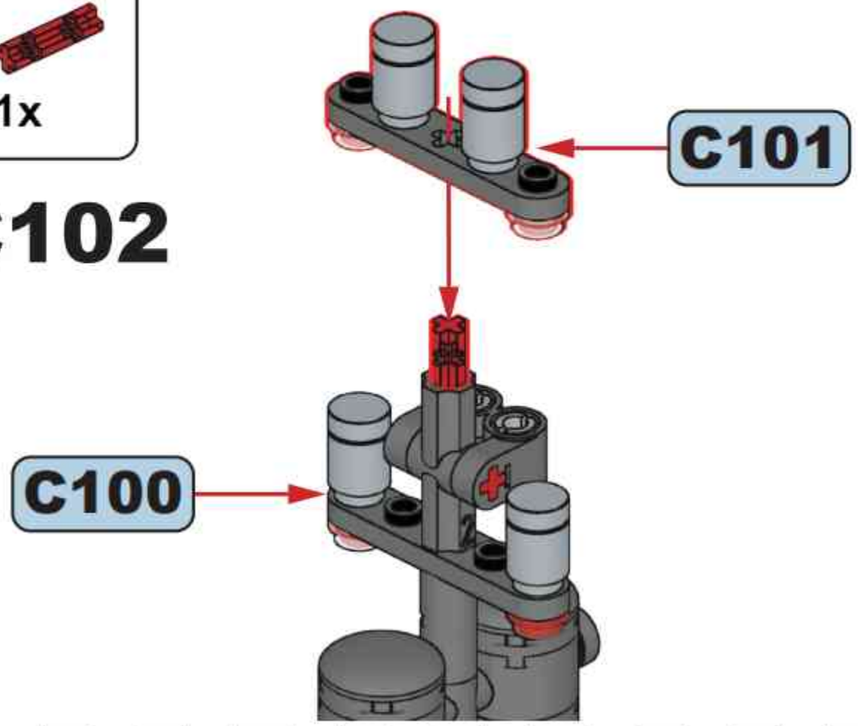

1x

C103

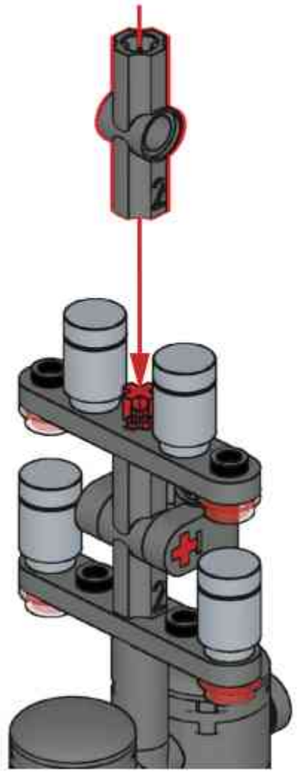

4x 4x 2x

C104

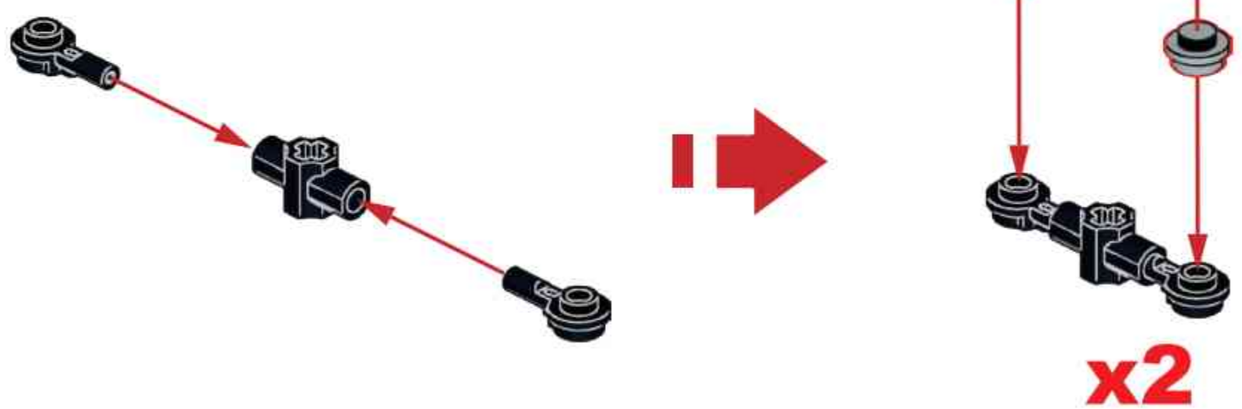

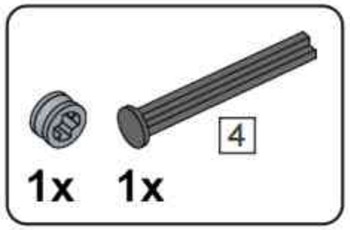

C105

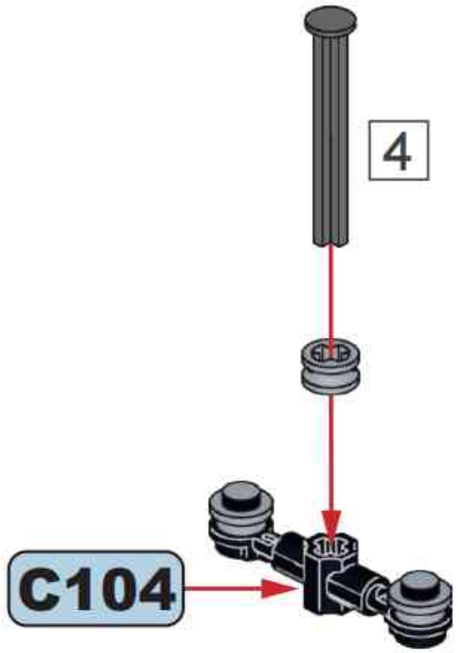

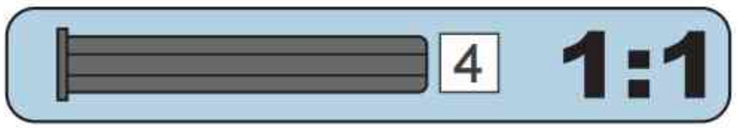

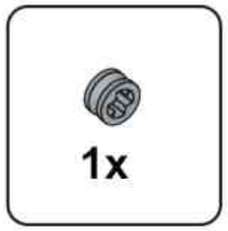

C106

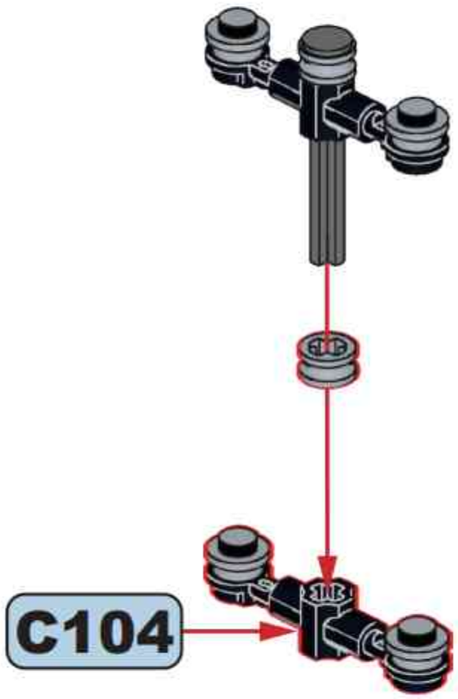

C107

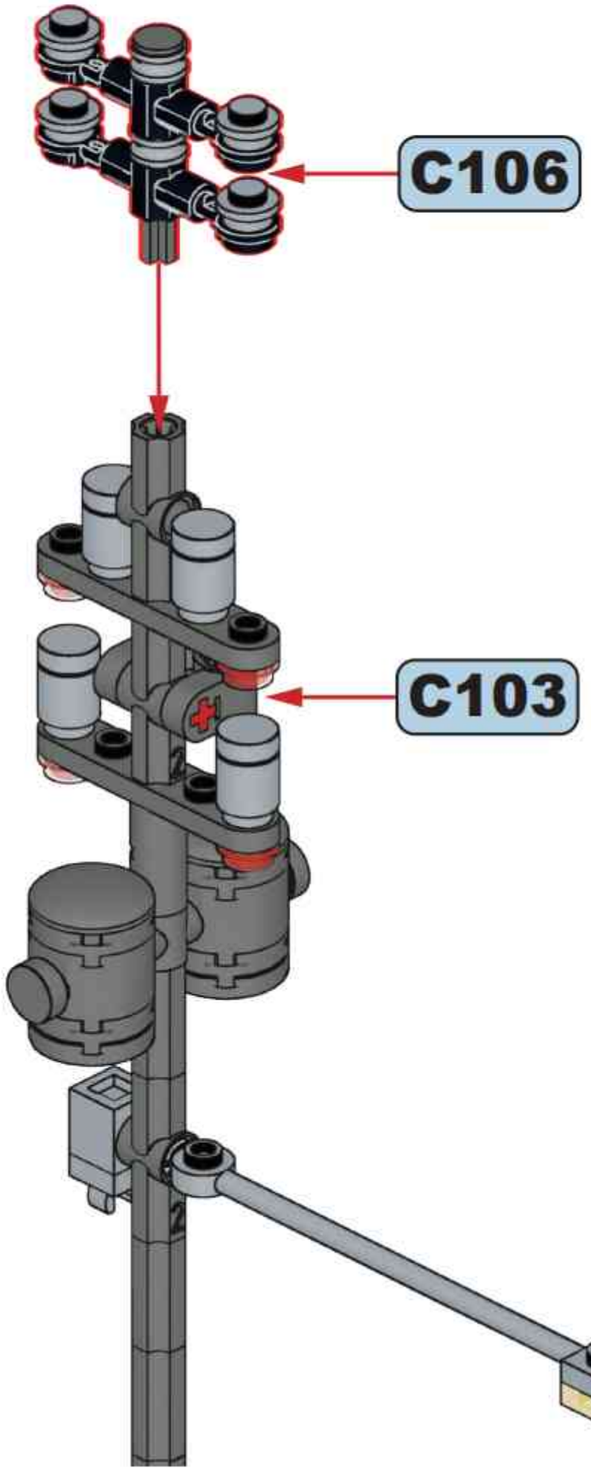

C108

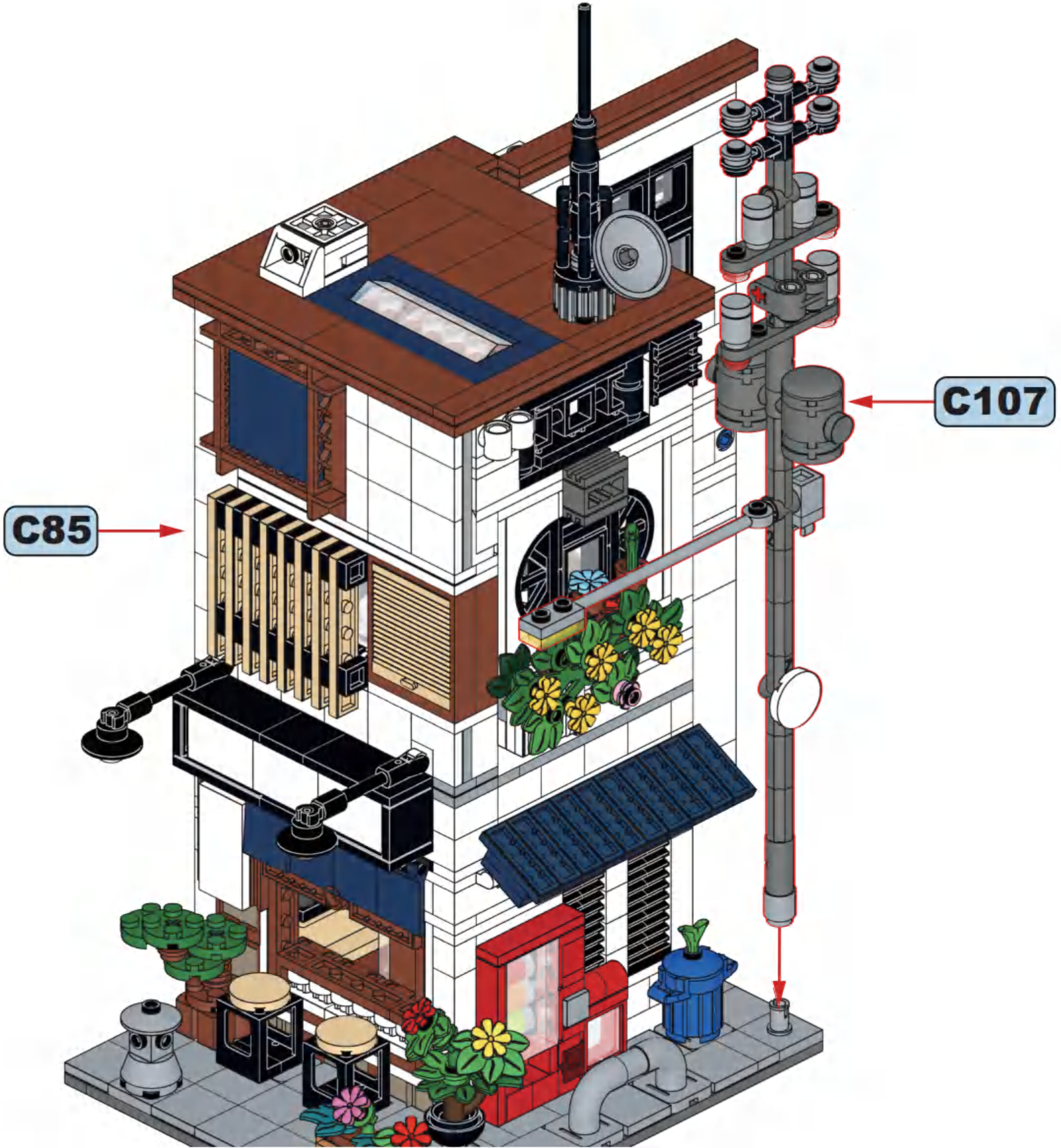

2x 2x

C109

12

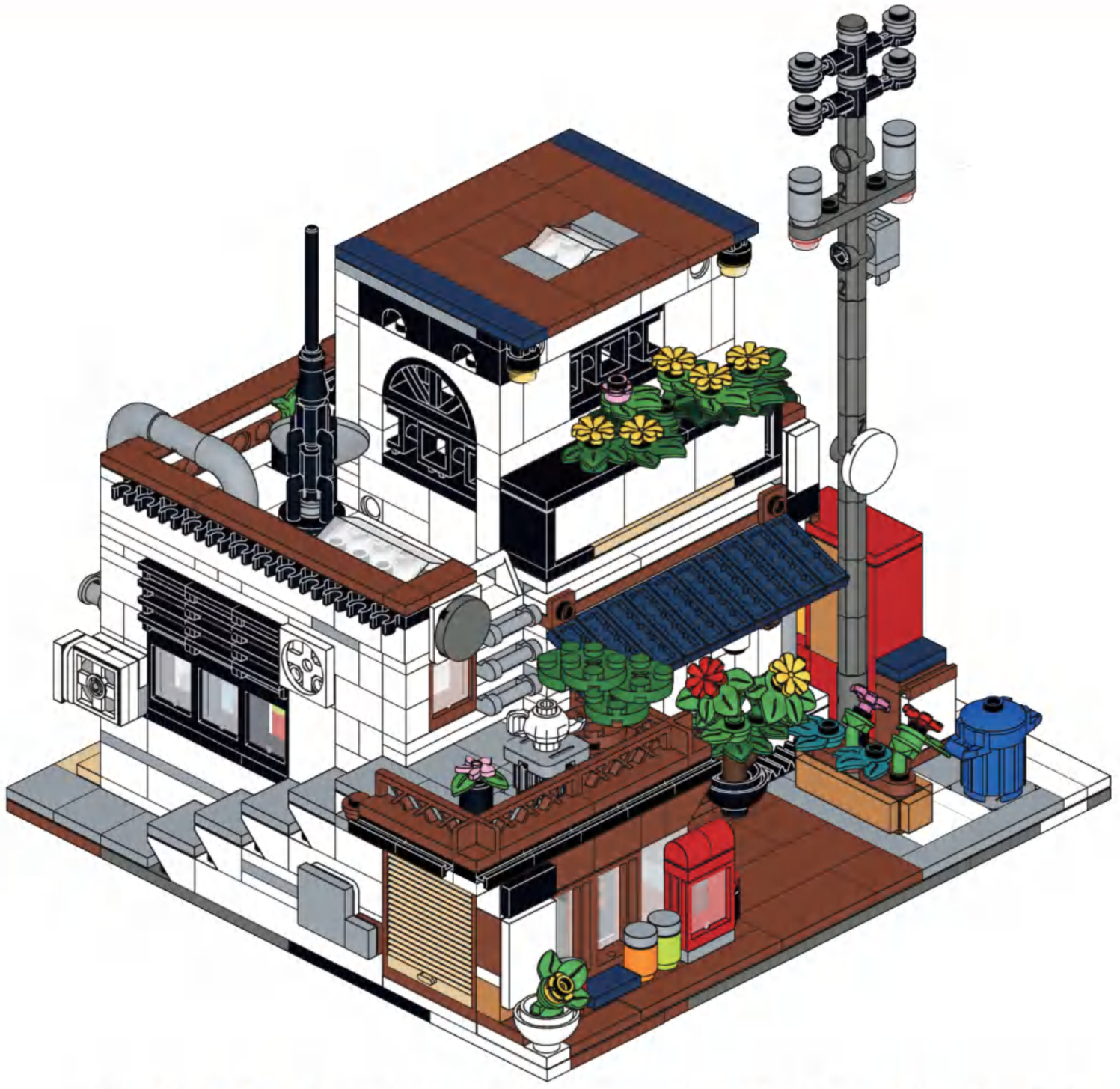

No step-by-step bag sorting is provided for this model.

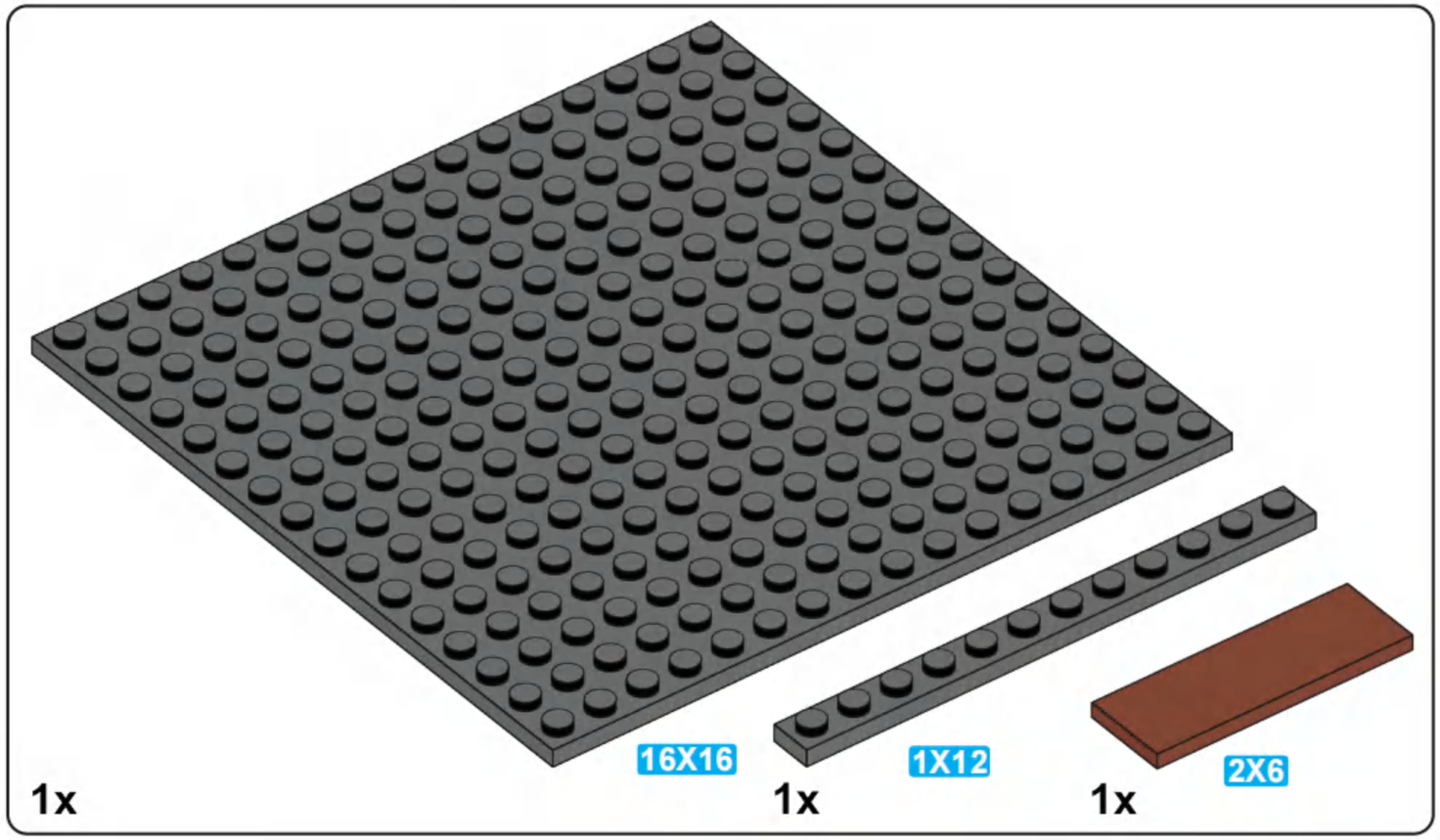

1x 1x 1x

1

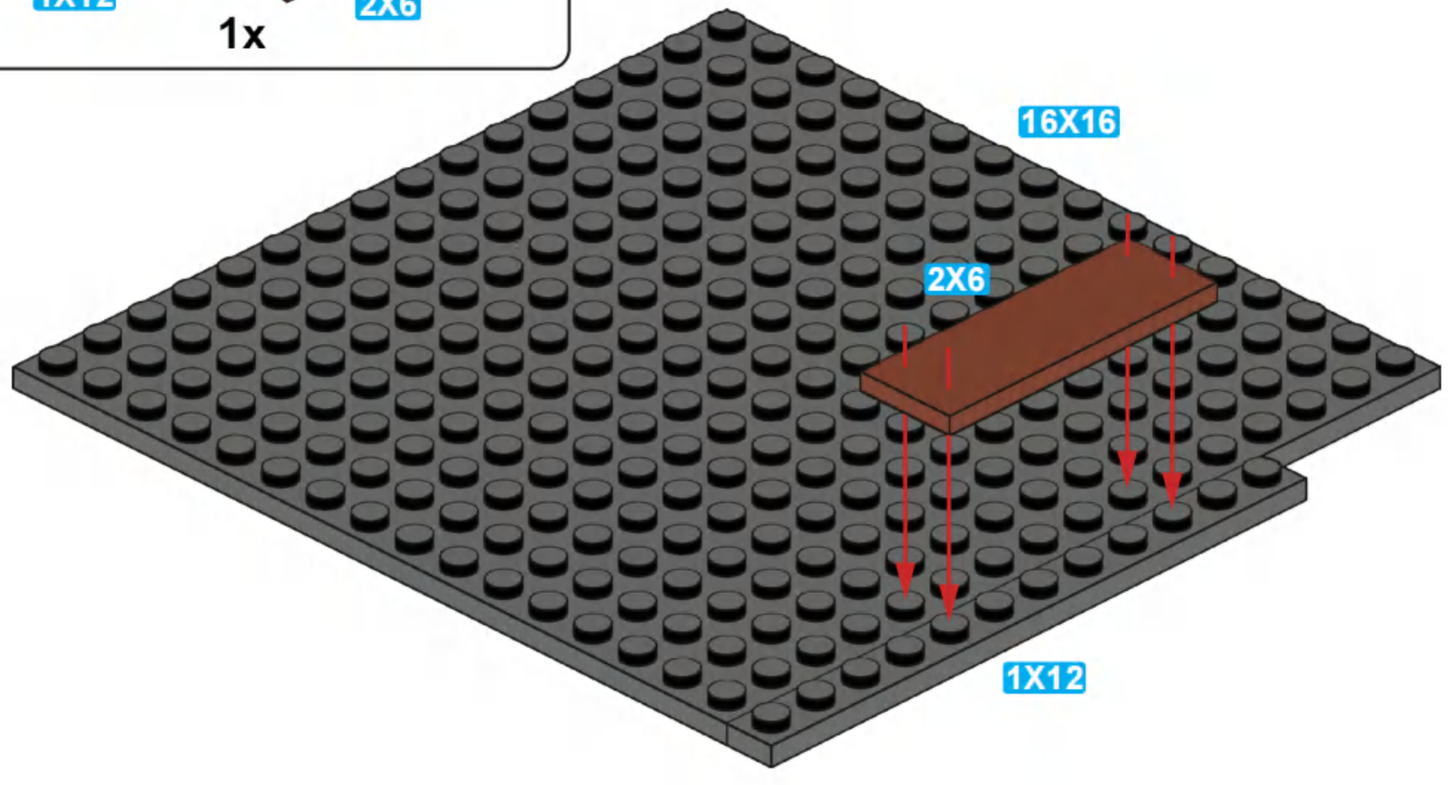

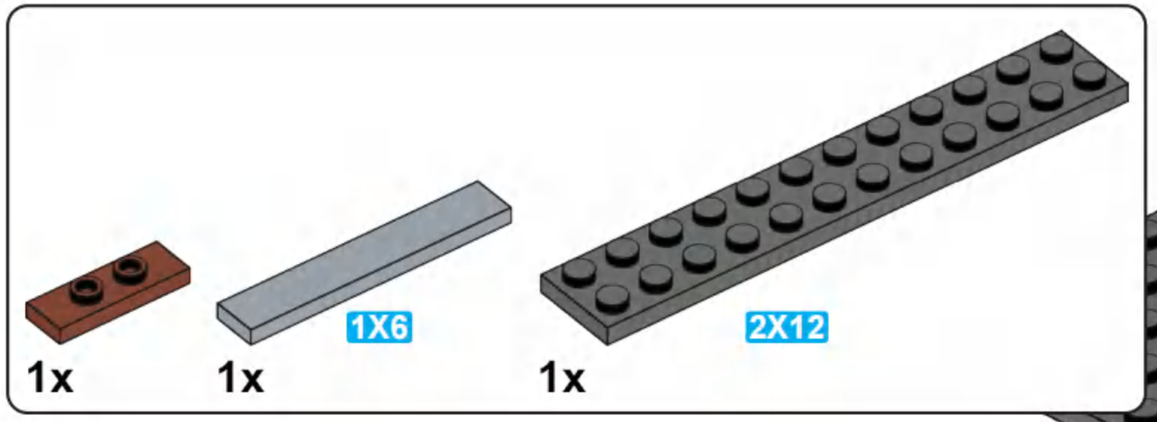

2

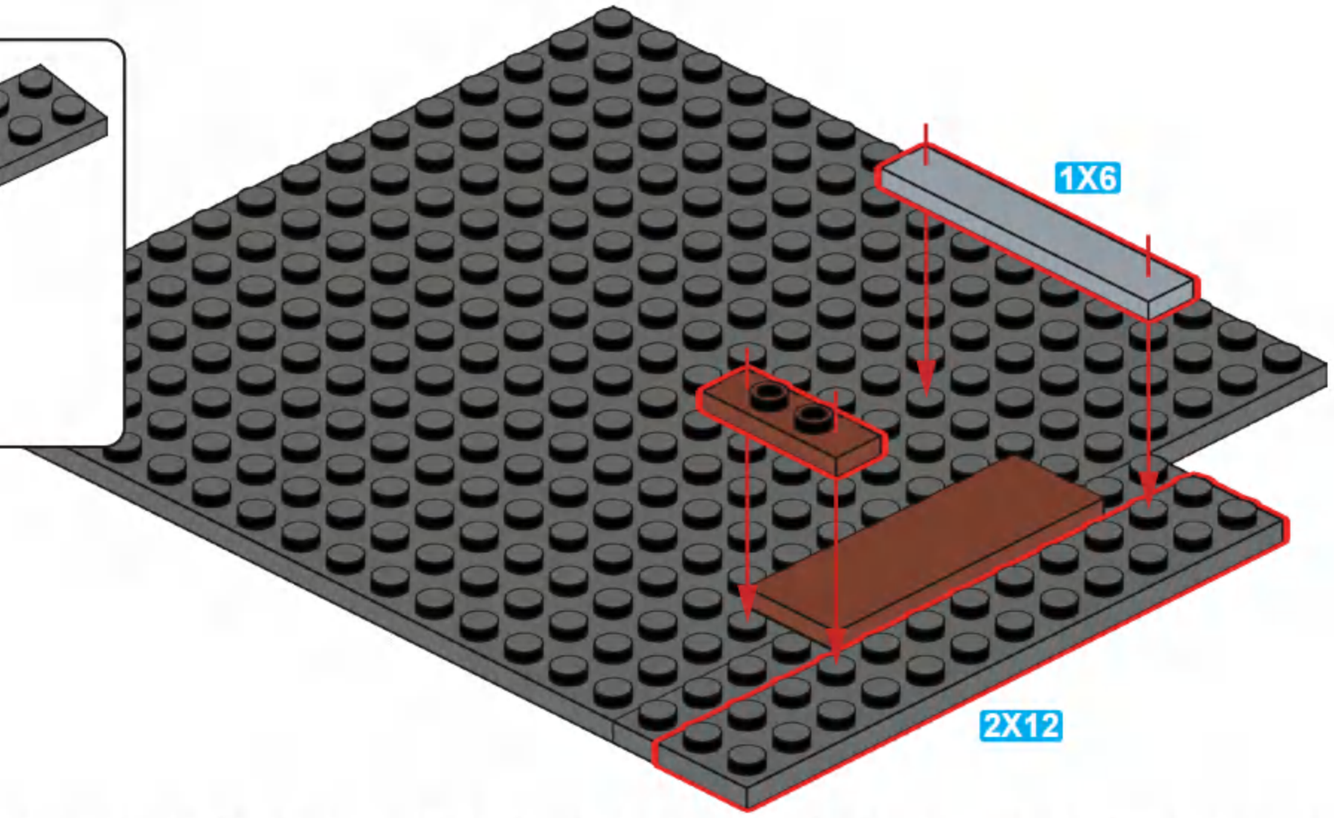

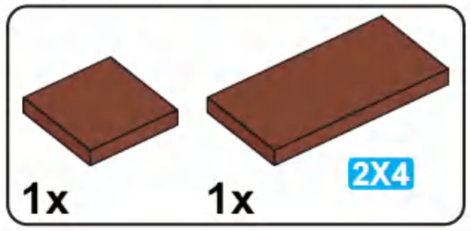

3

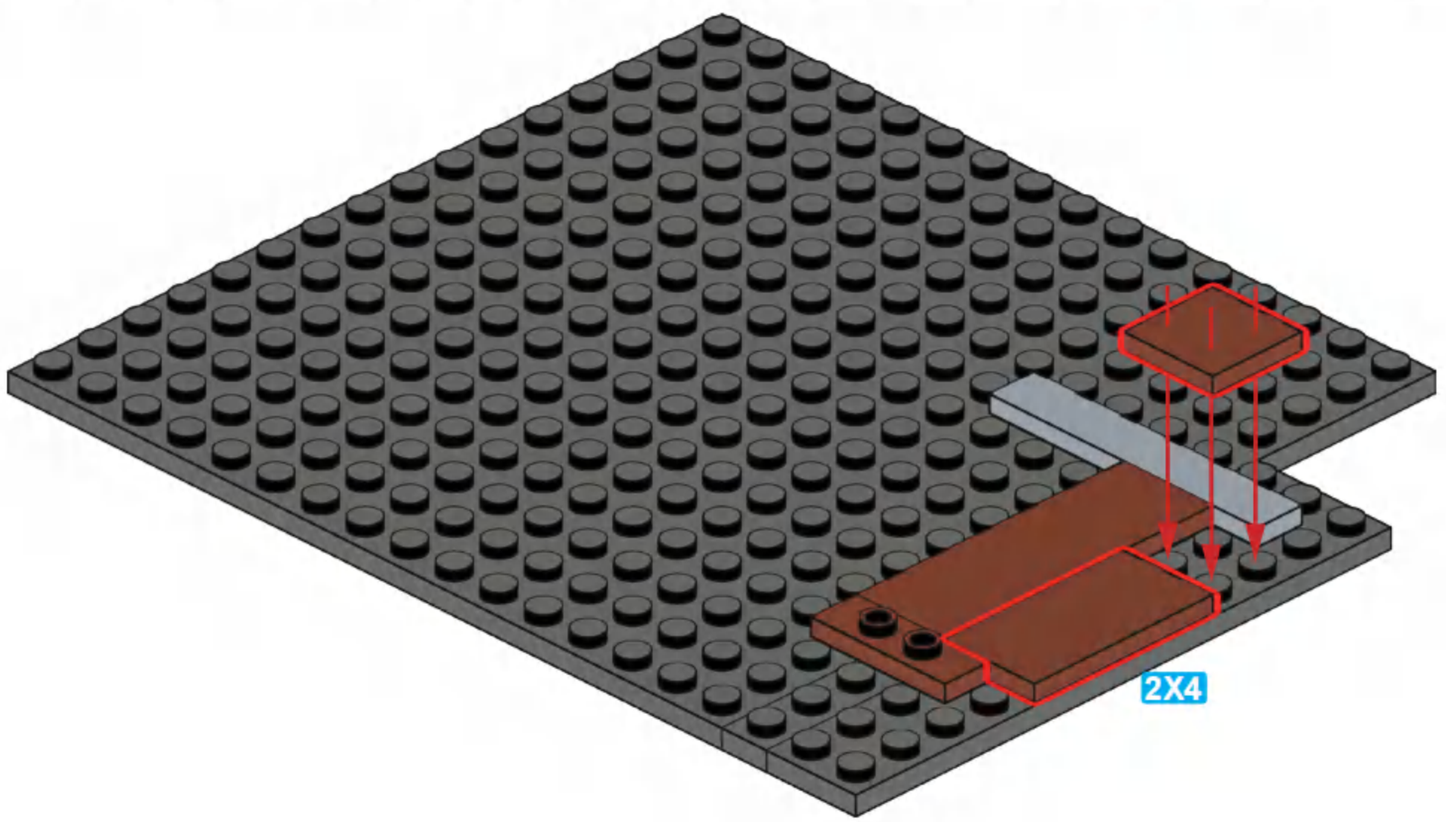

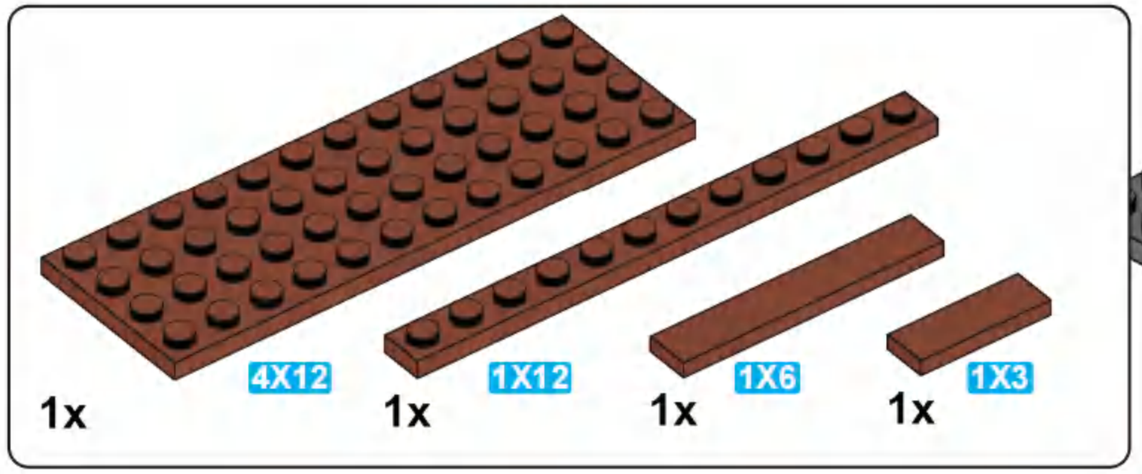
1x
4X12
1x
1X12
1x
1X6
1x
1X3

4

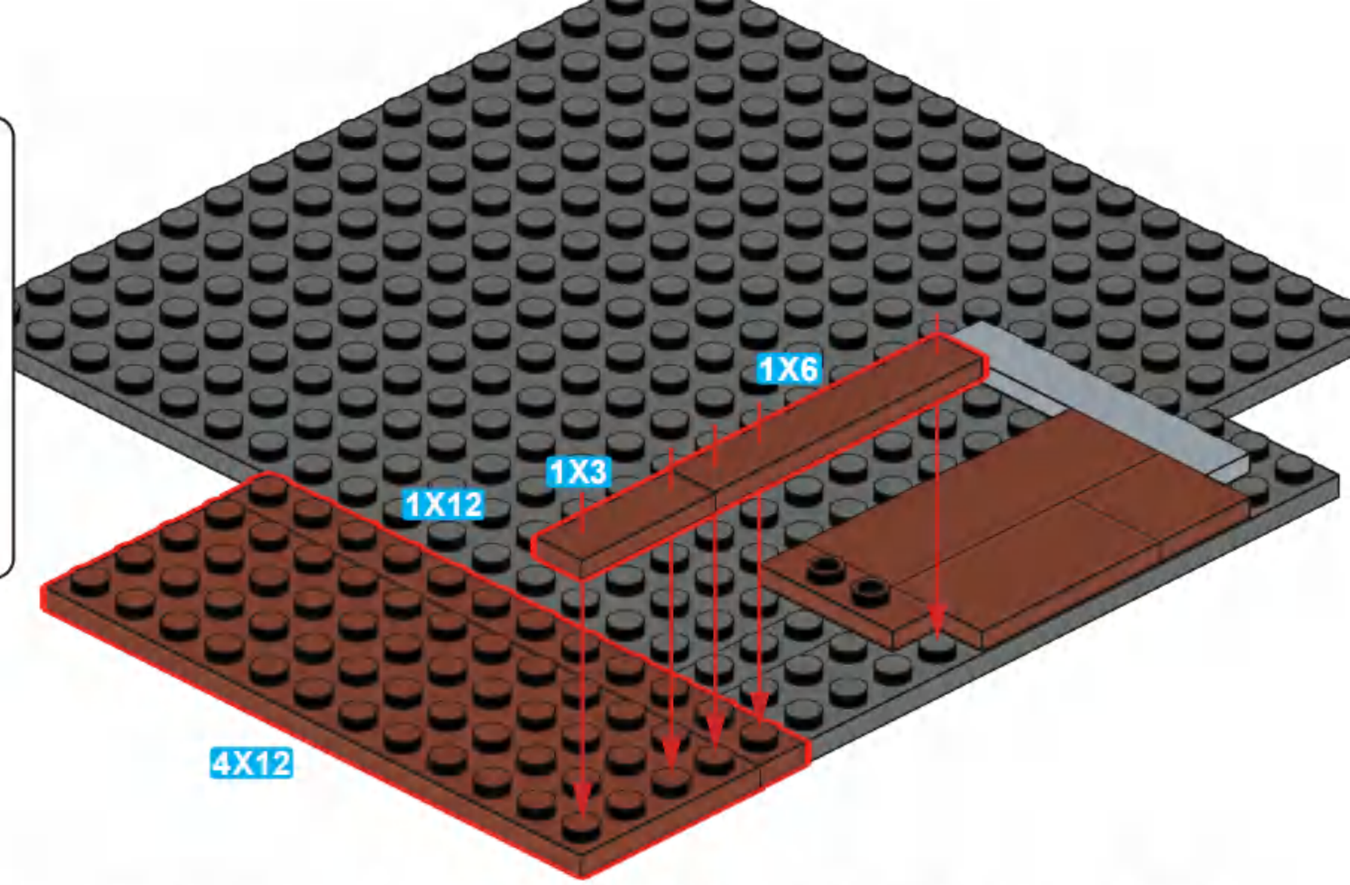
1X6
1X3
1X12
4X12

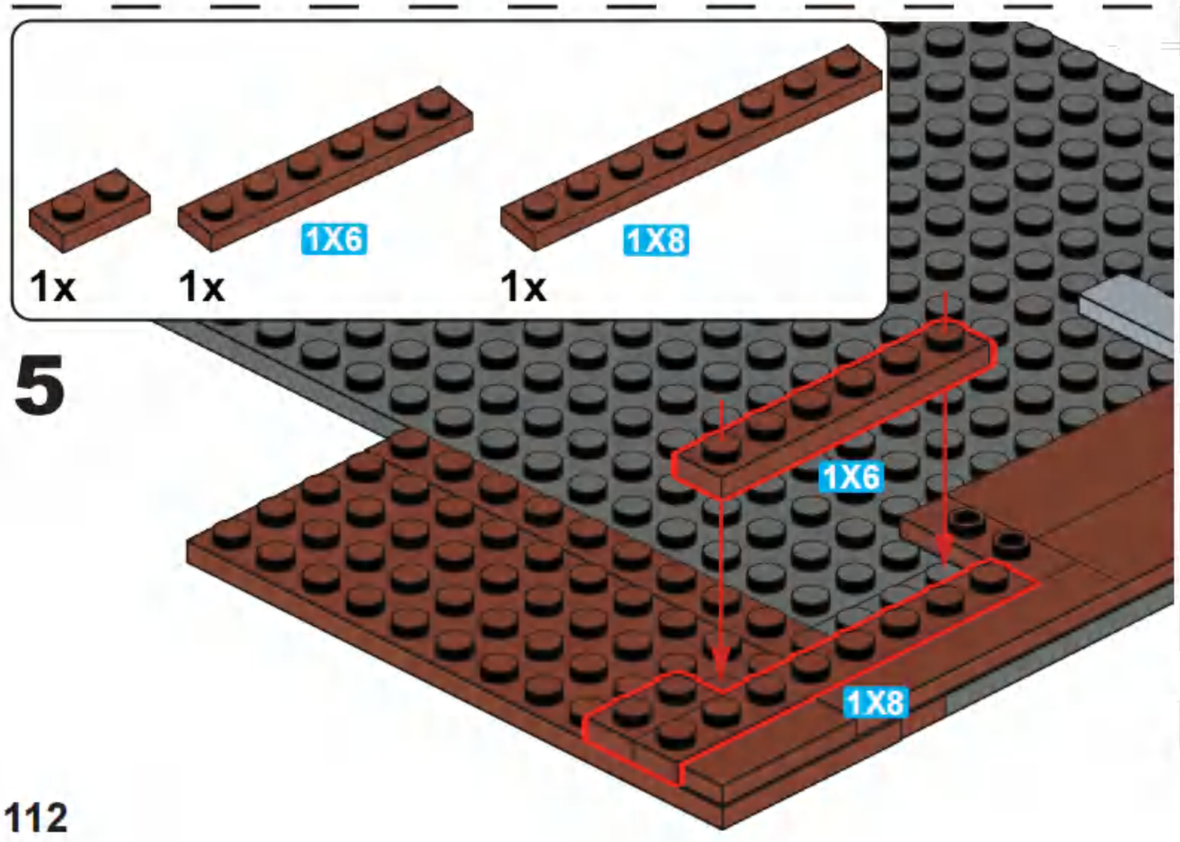
1x
1x
1X6
1x
1X8

5

1X6
1X8

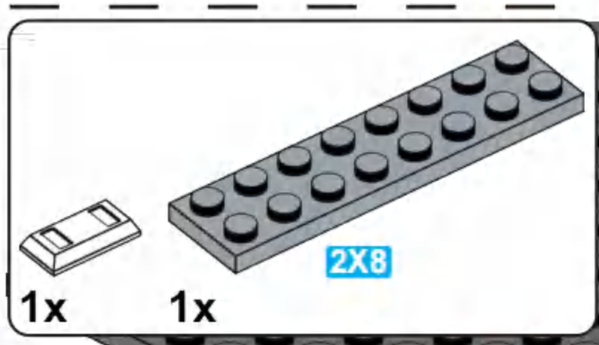
1x
1x
2X8

6

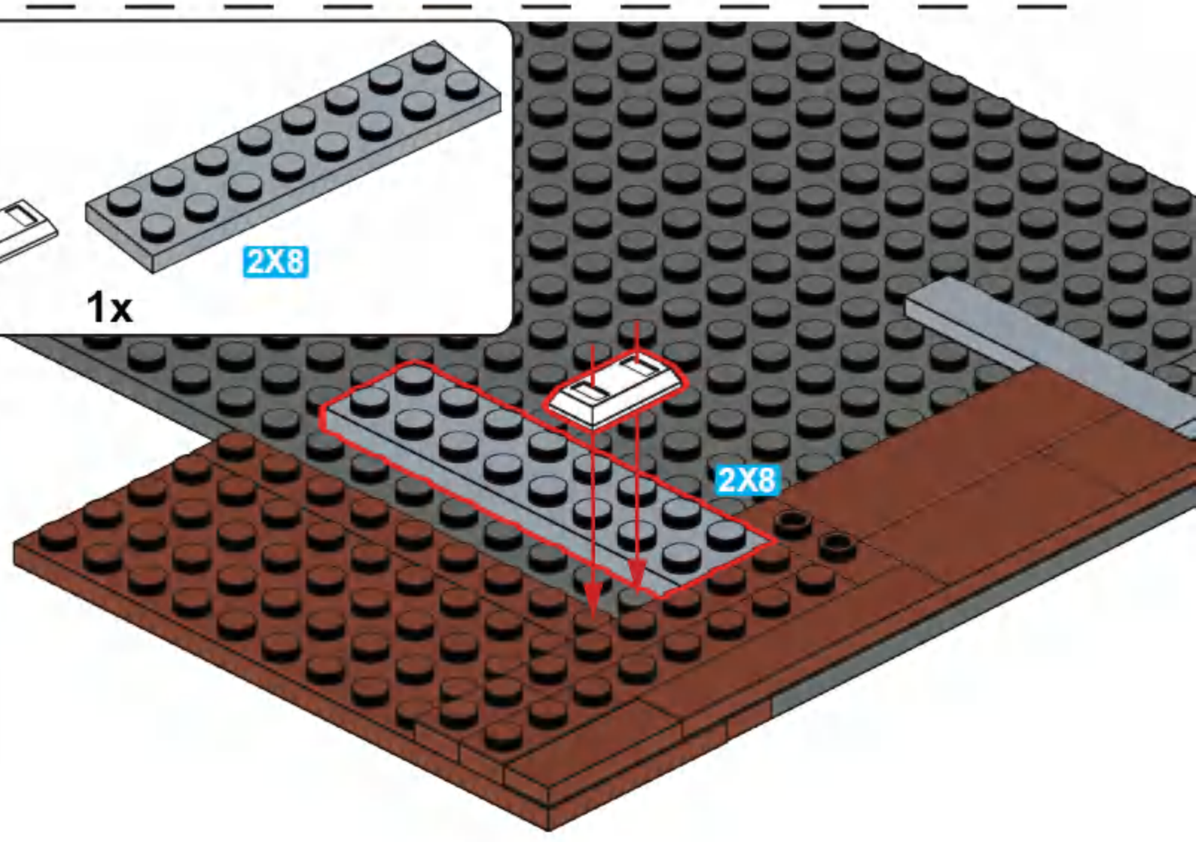
2X8

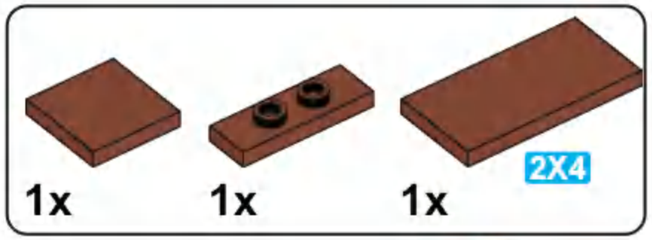

7

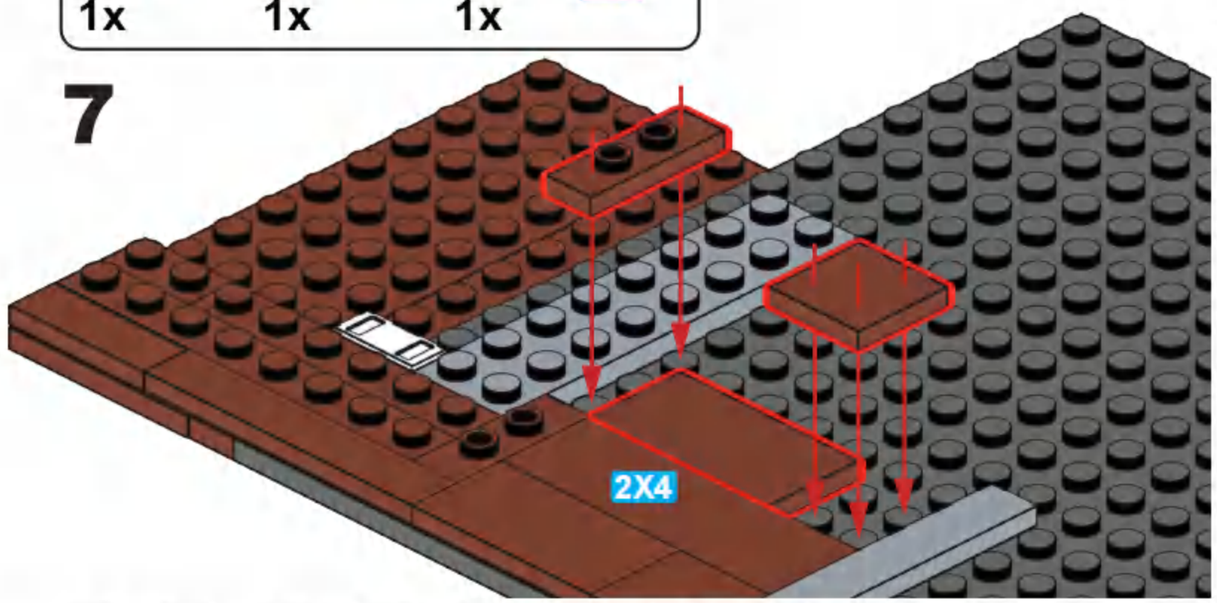

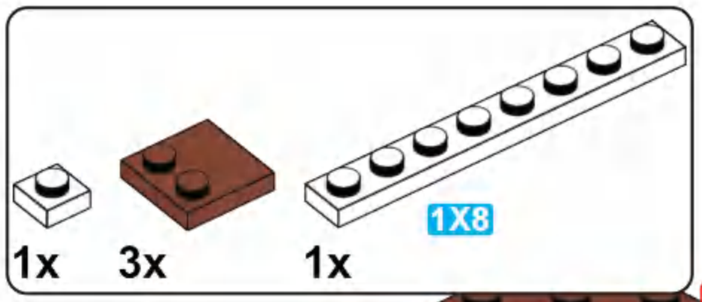

8

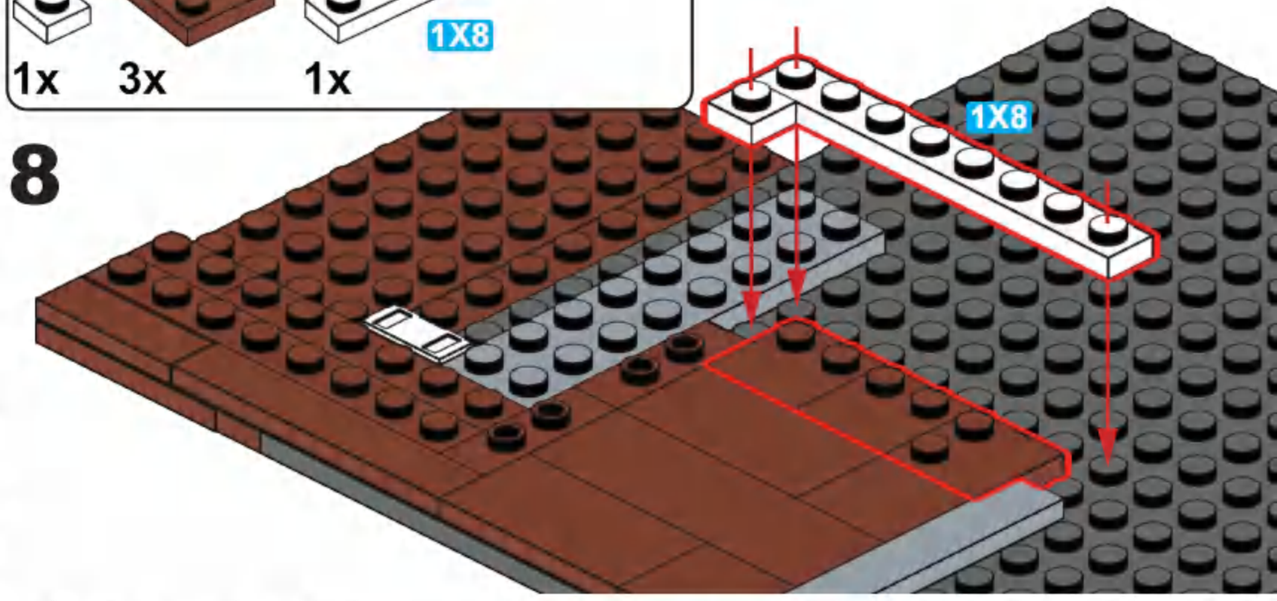

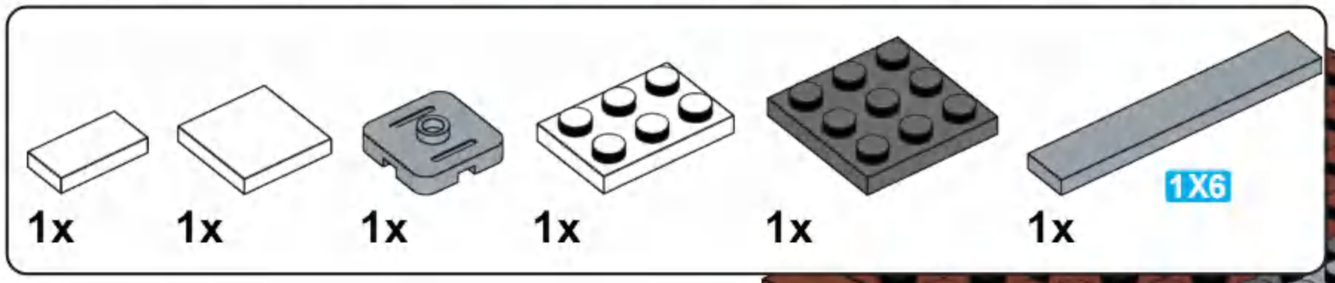

9

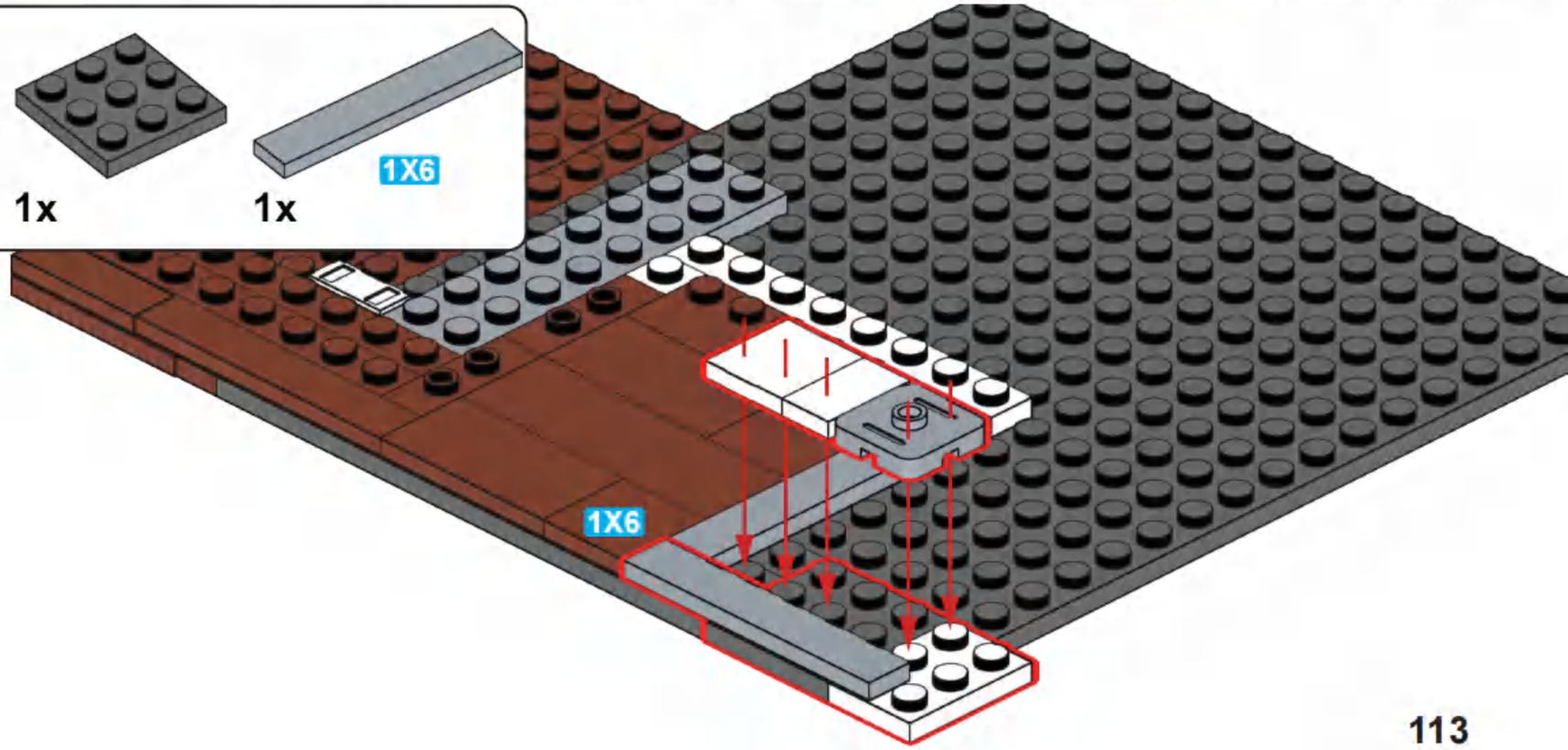

10

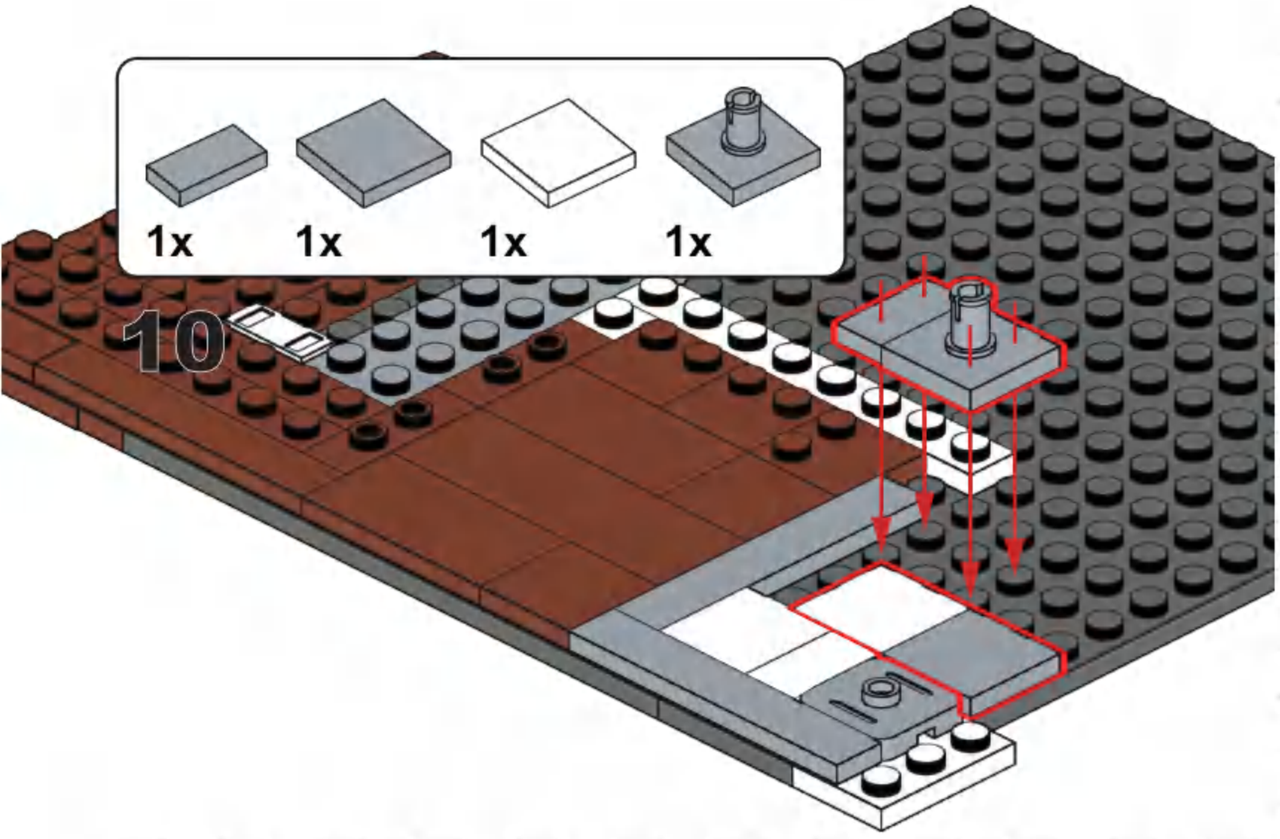

11

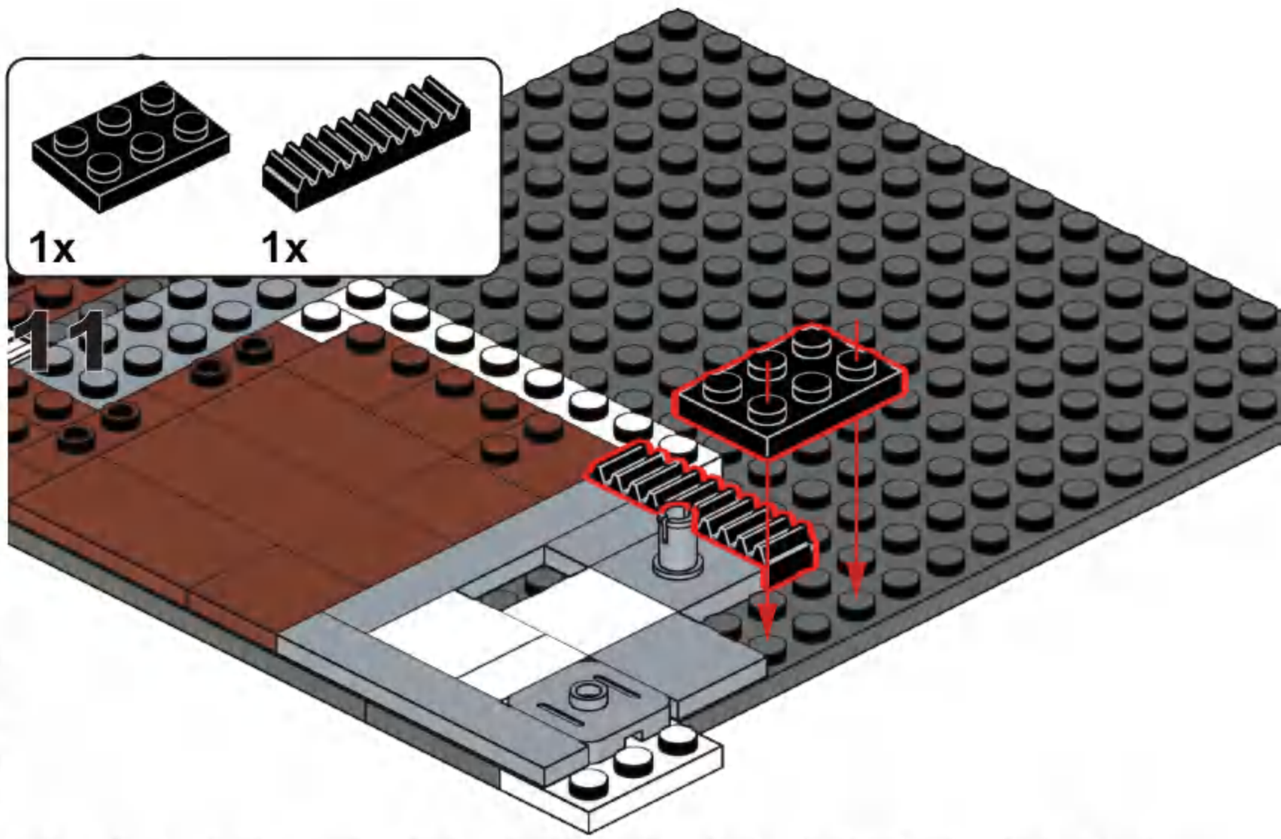

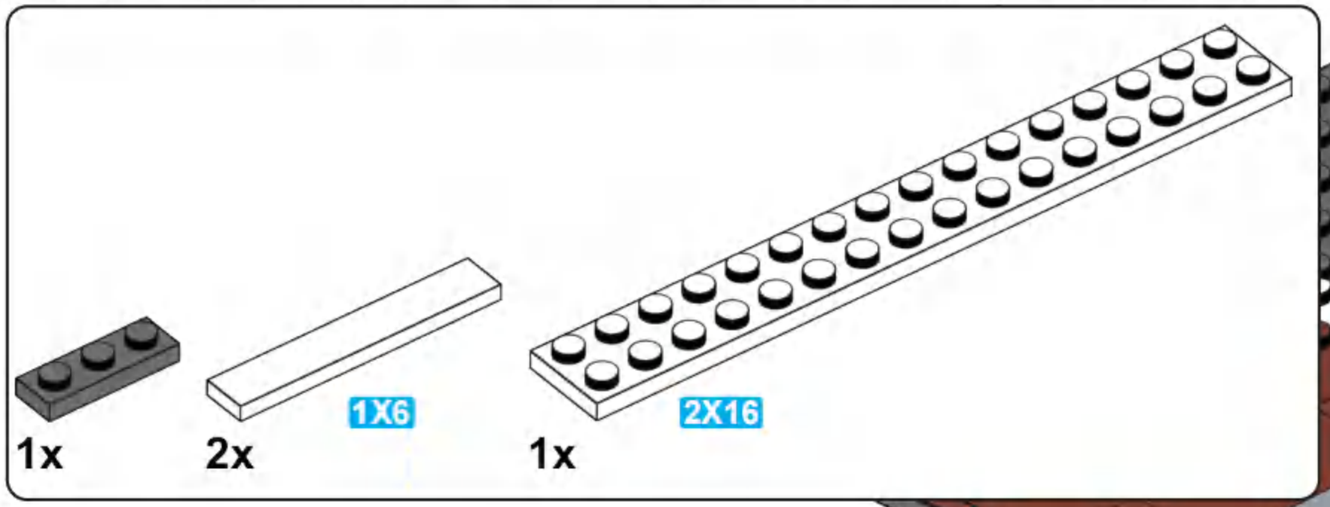

12

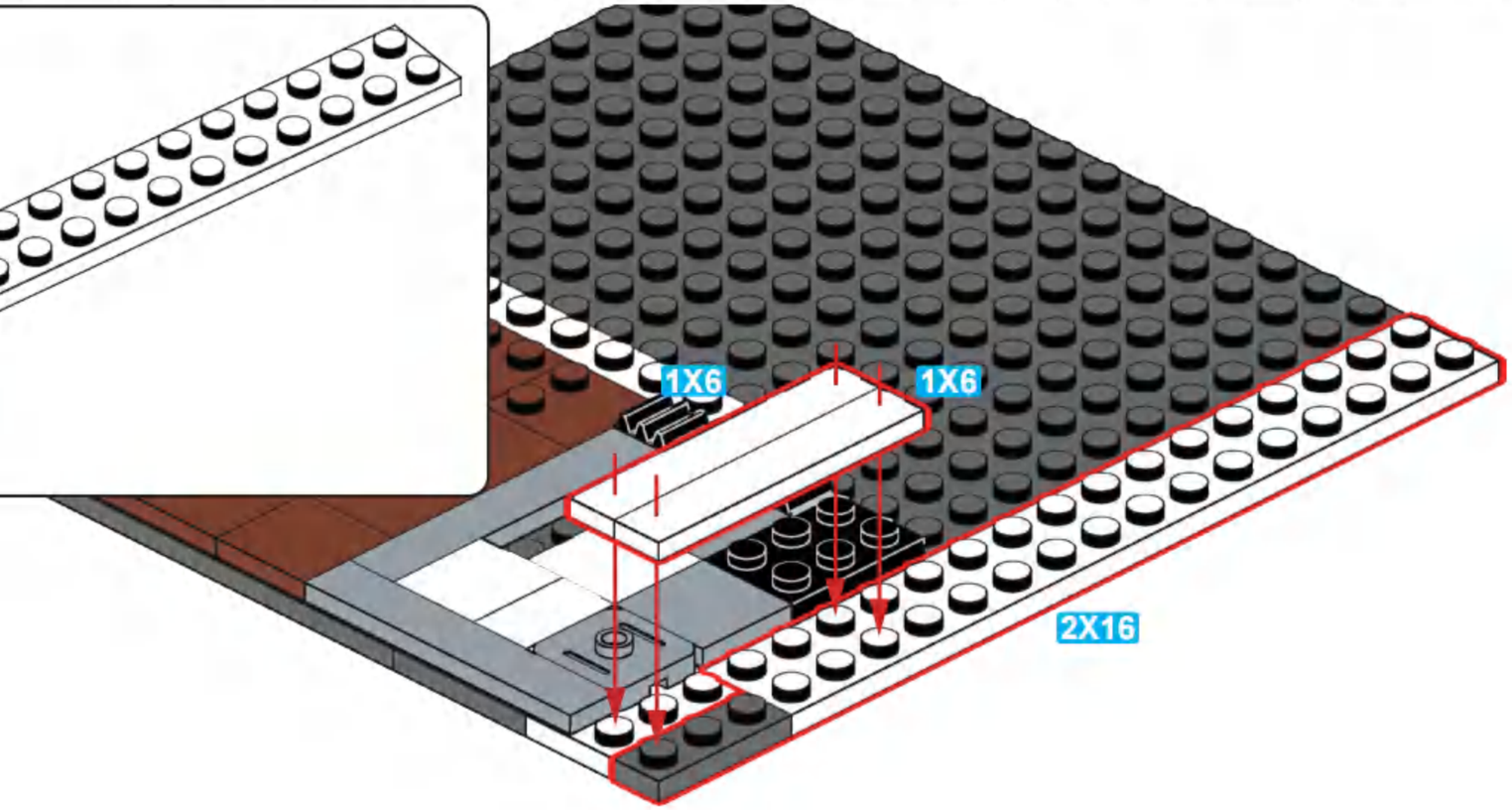

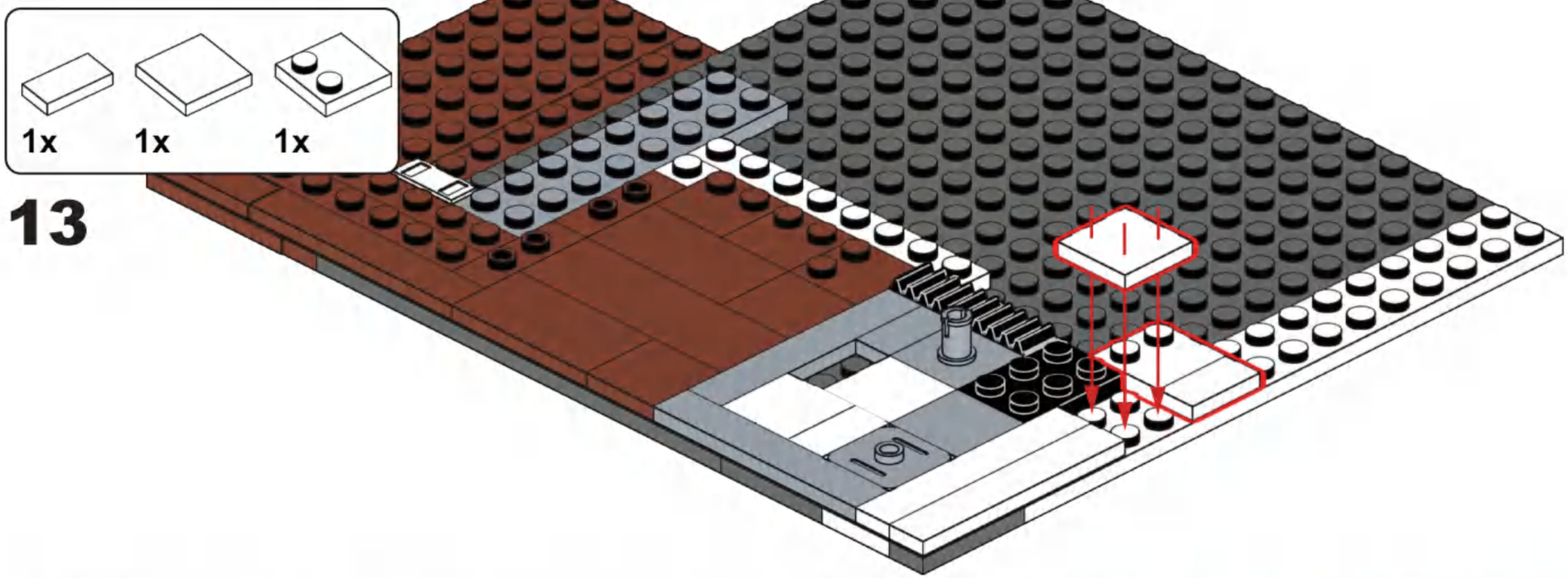

13

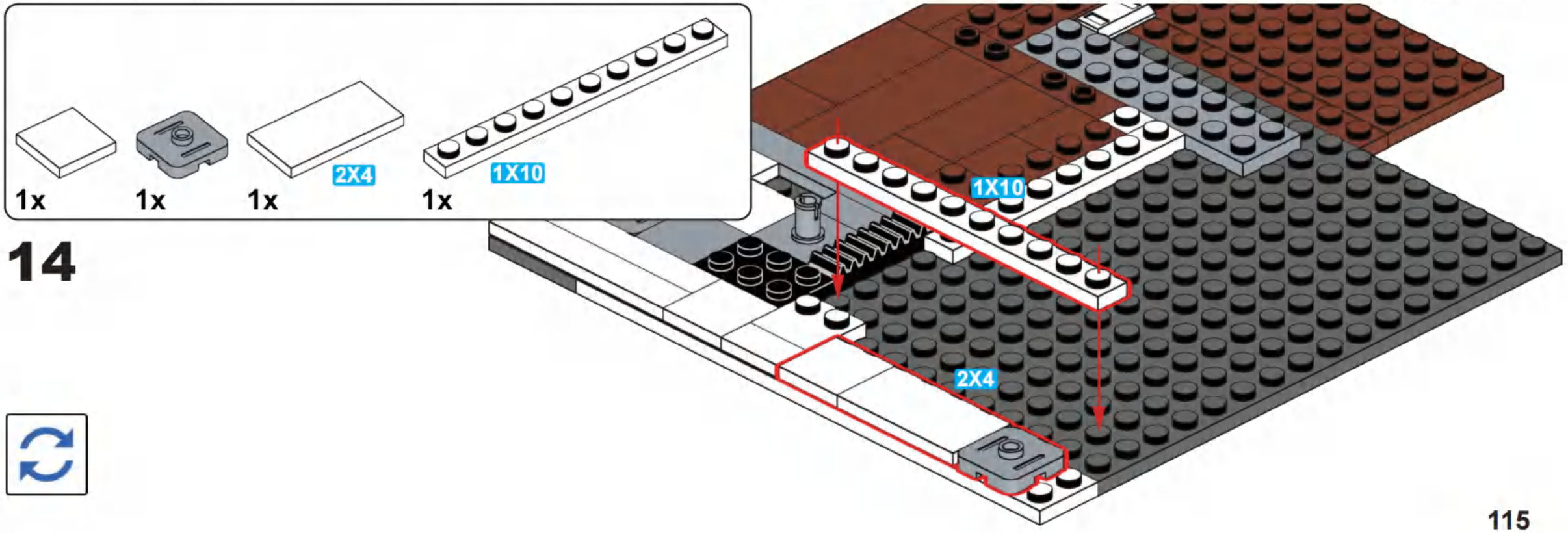

14

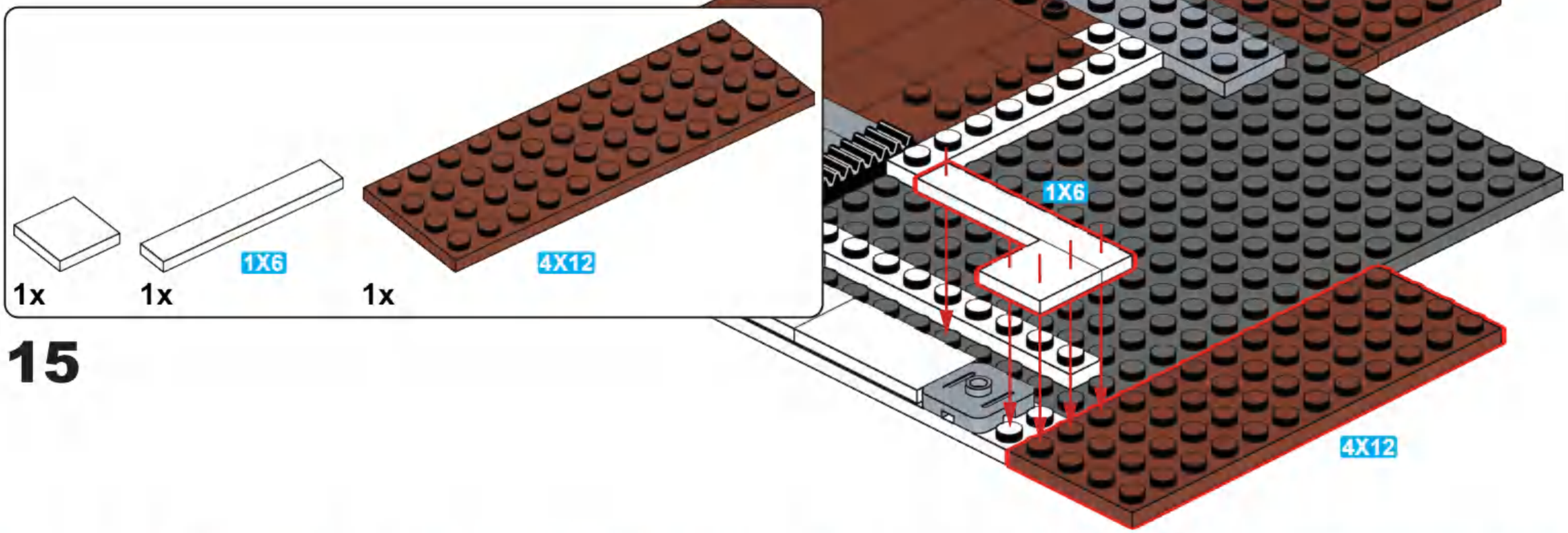

15

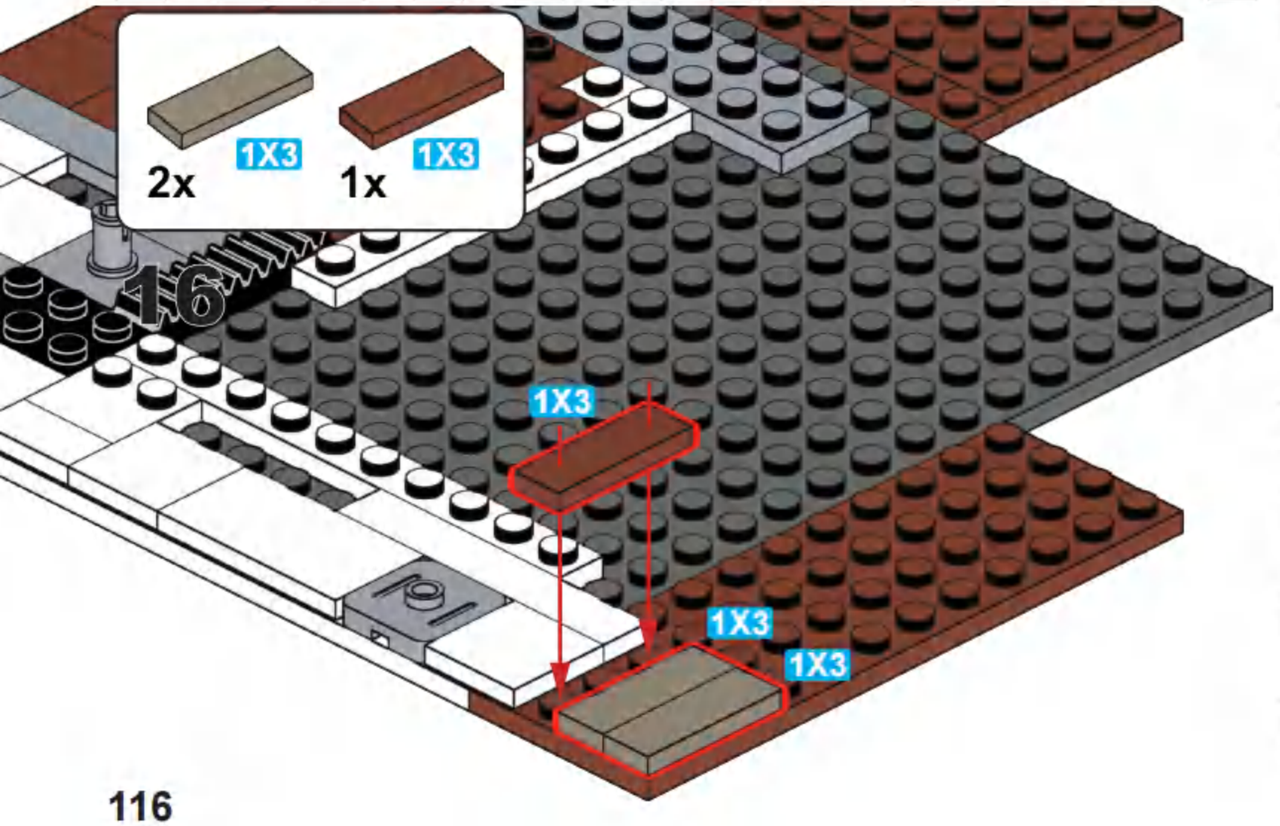

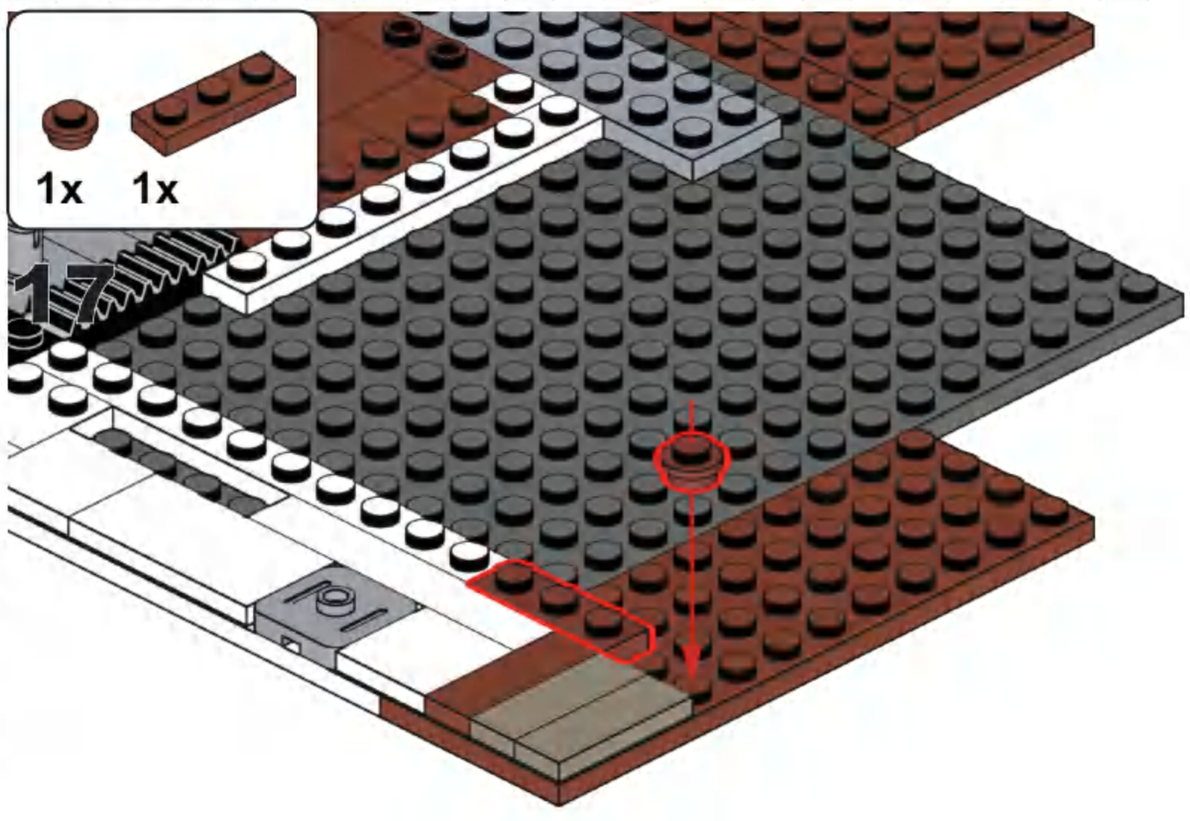

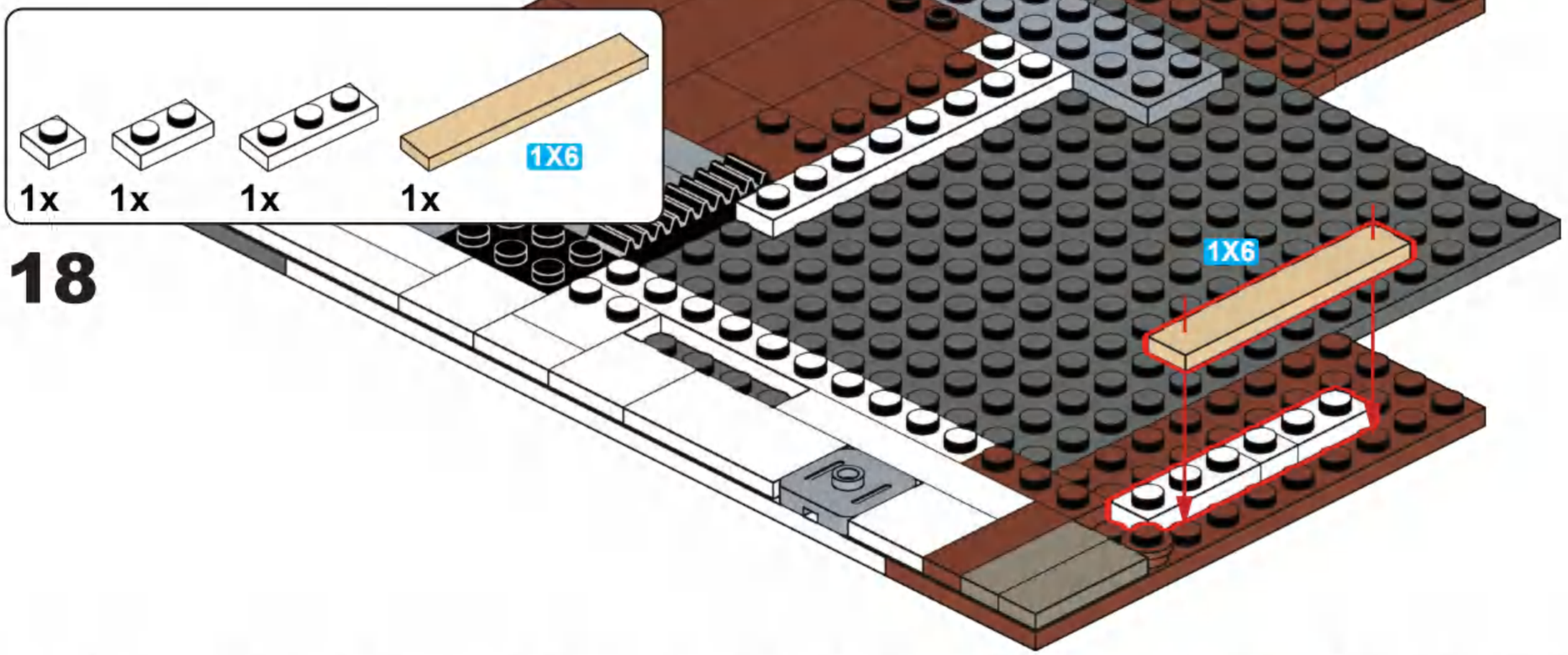

18

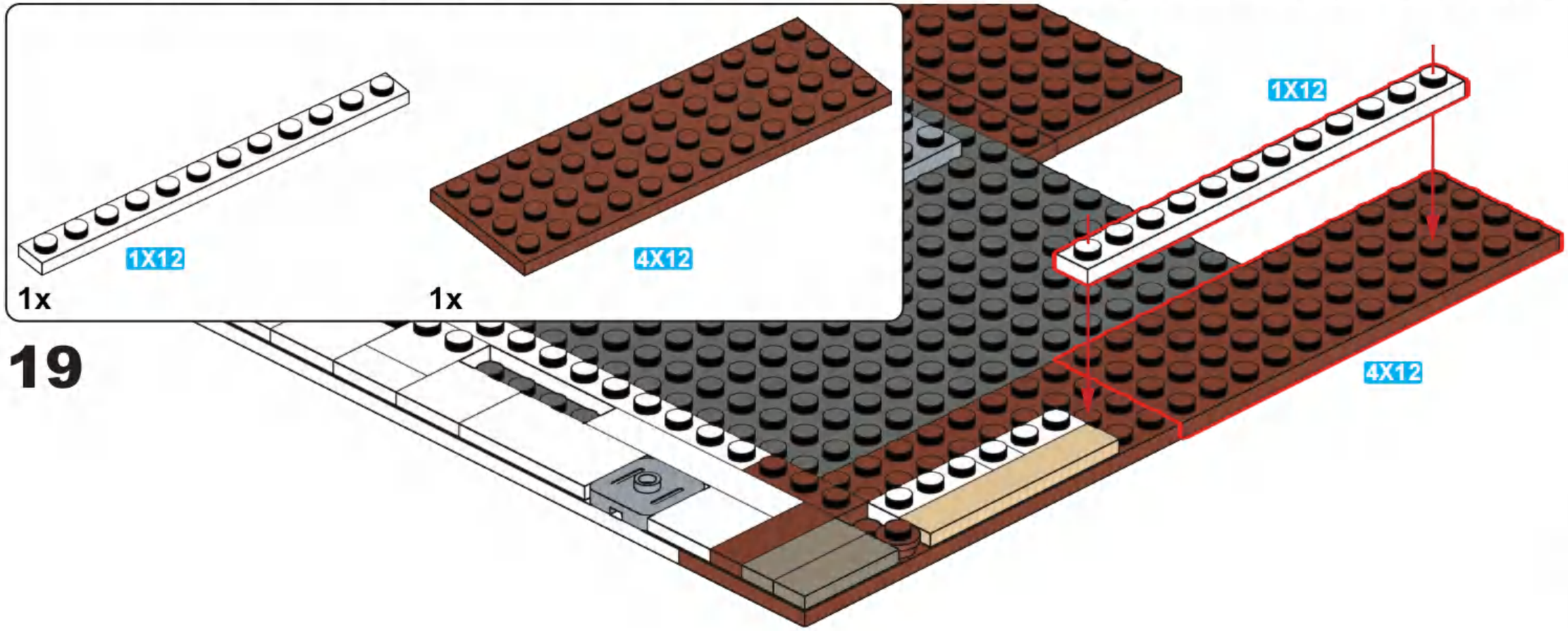

19

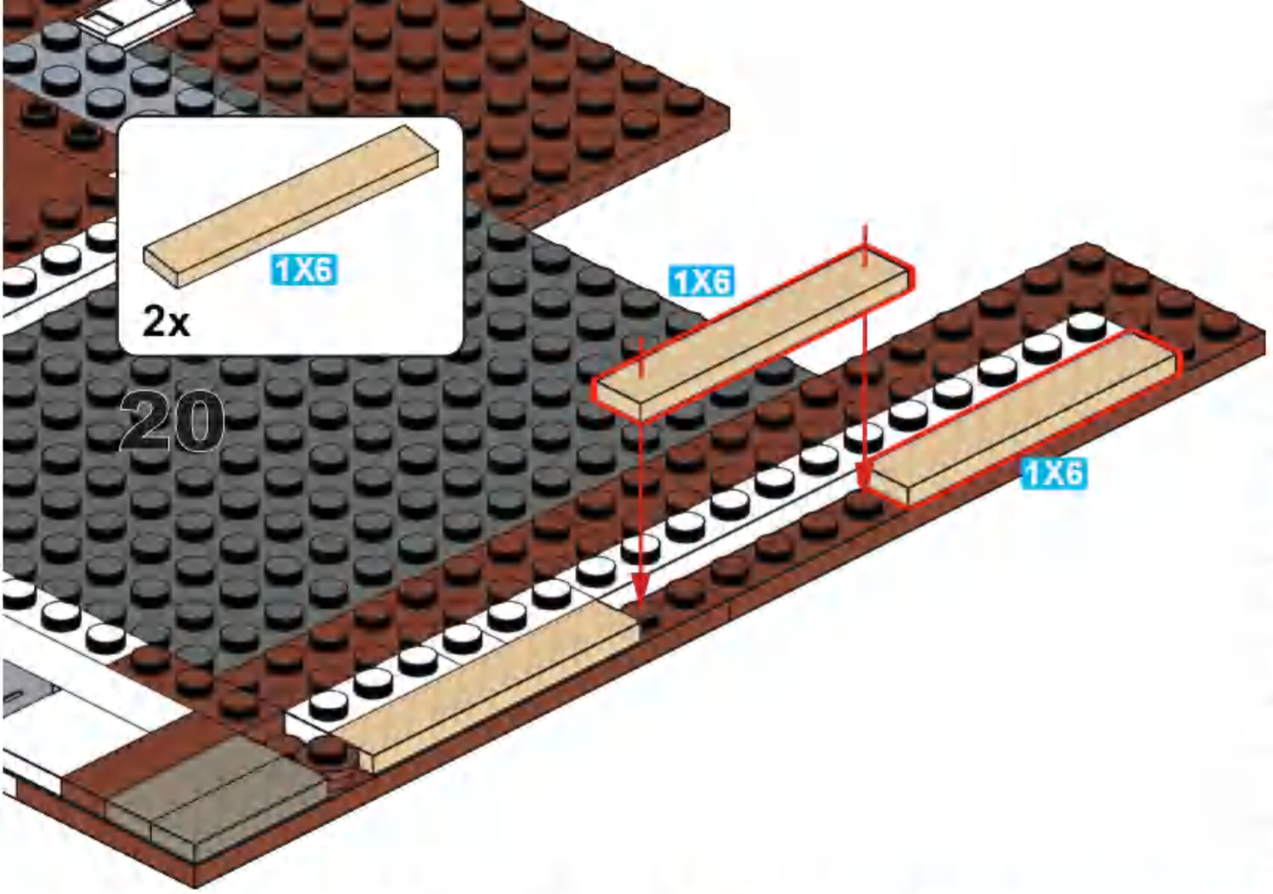
2x
1X6
20
1X6
1X6

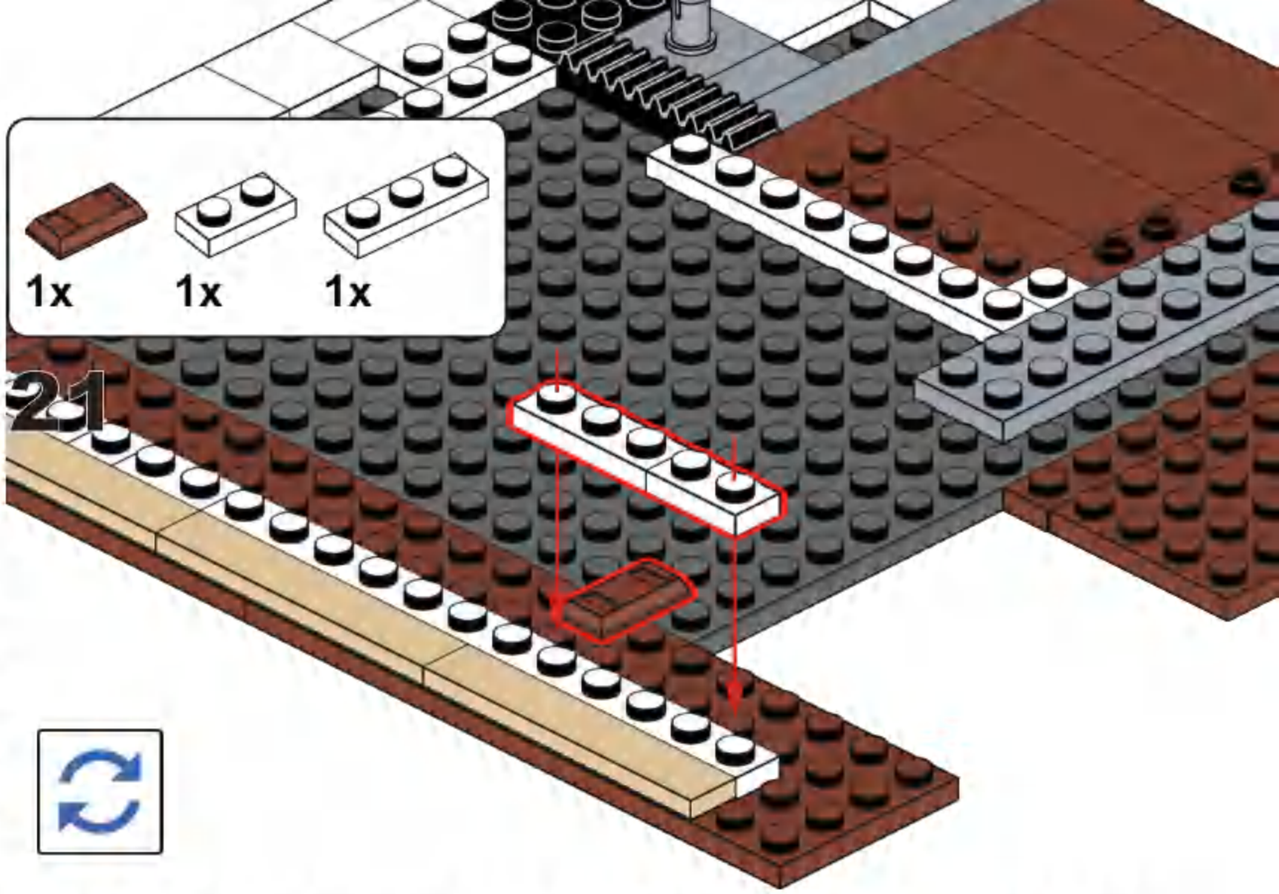
1x
1x
1x
21

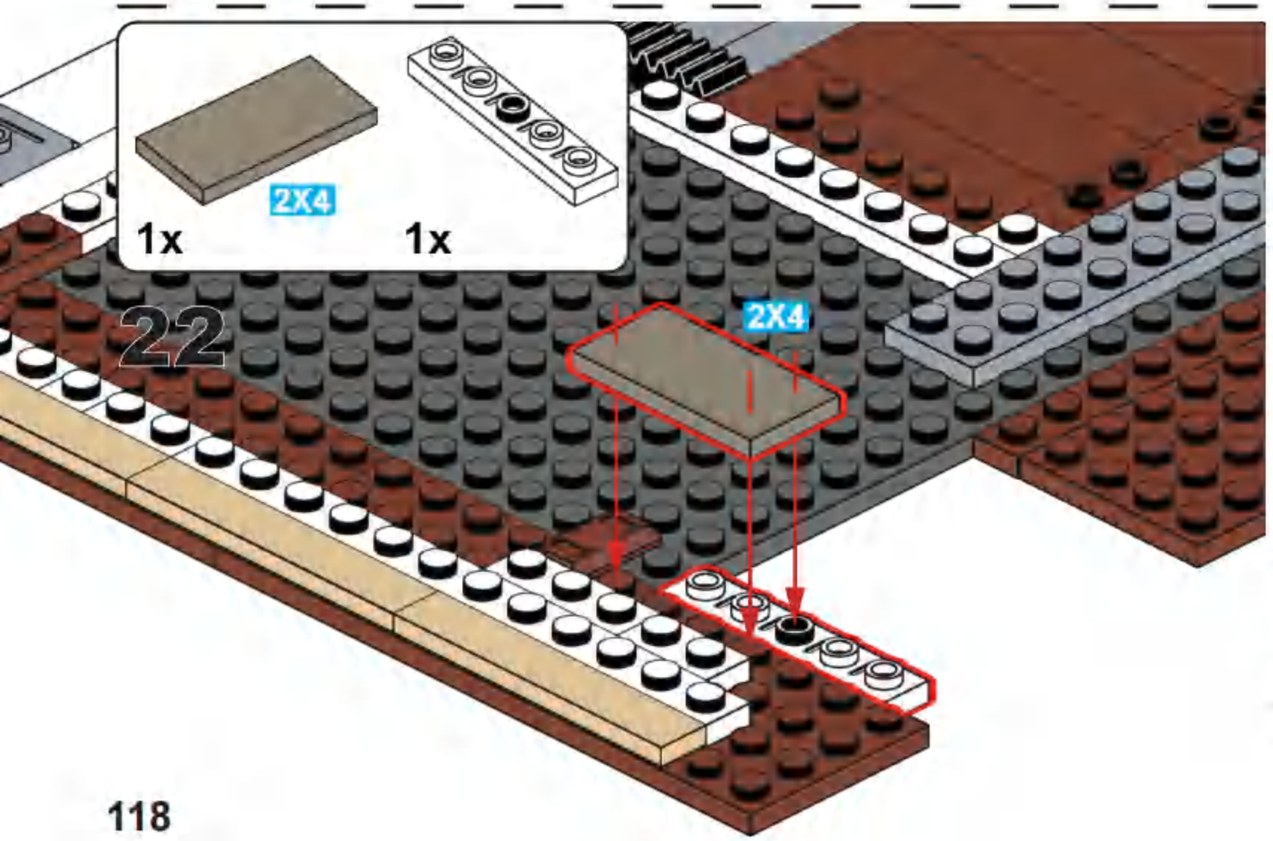
1x
2X4
1x
22
2X4

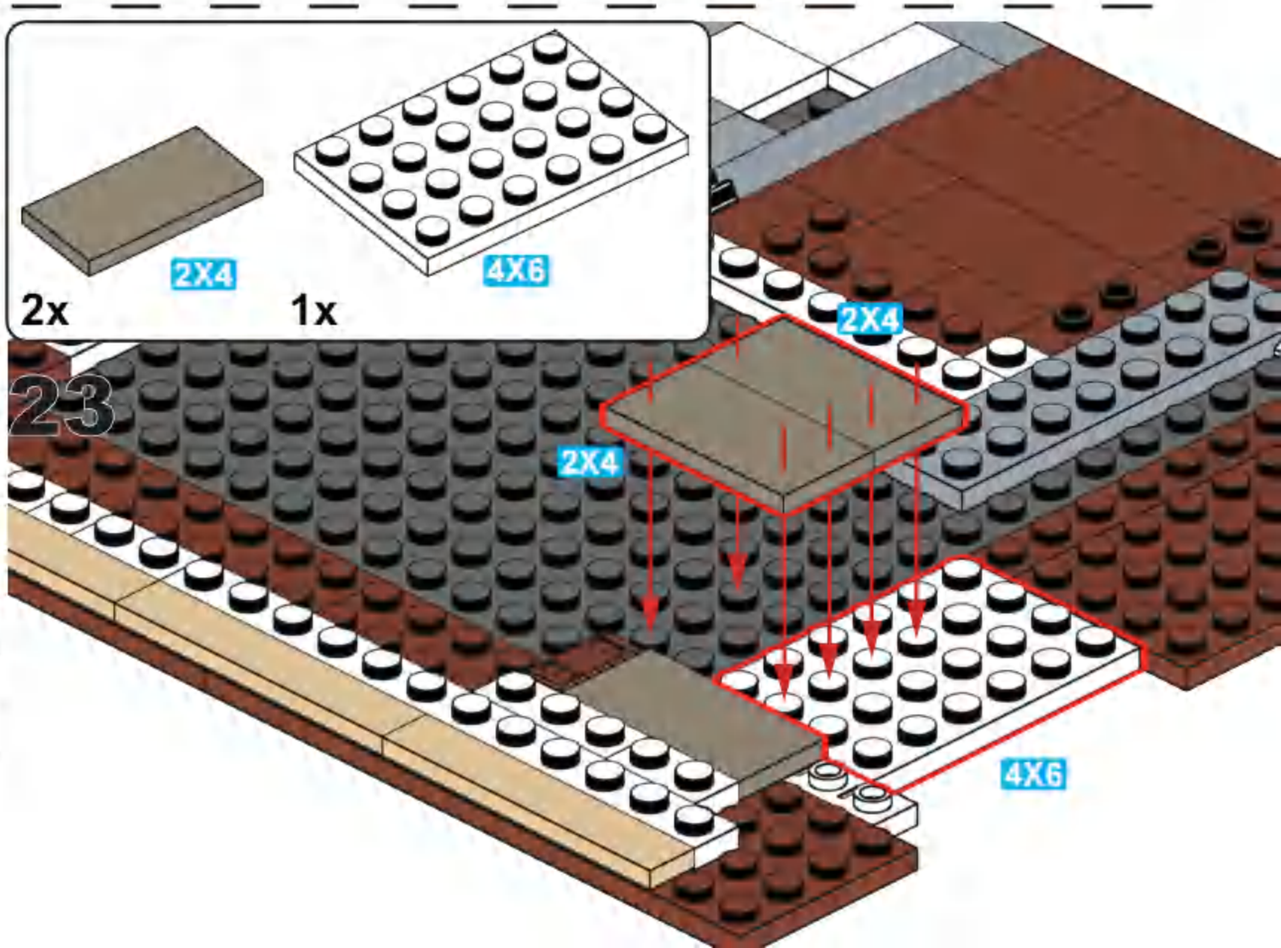
2x
2X4
1x
4X6
23
2X4
2X4
4X6

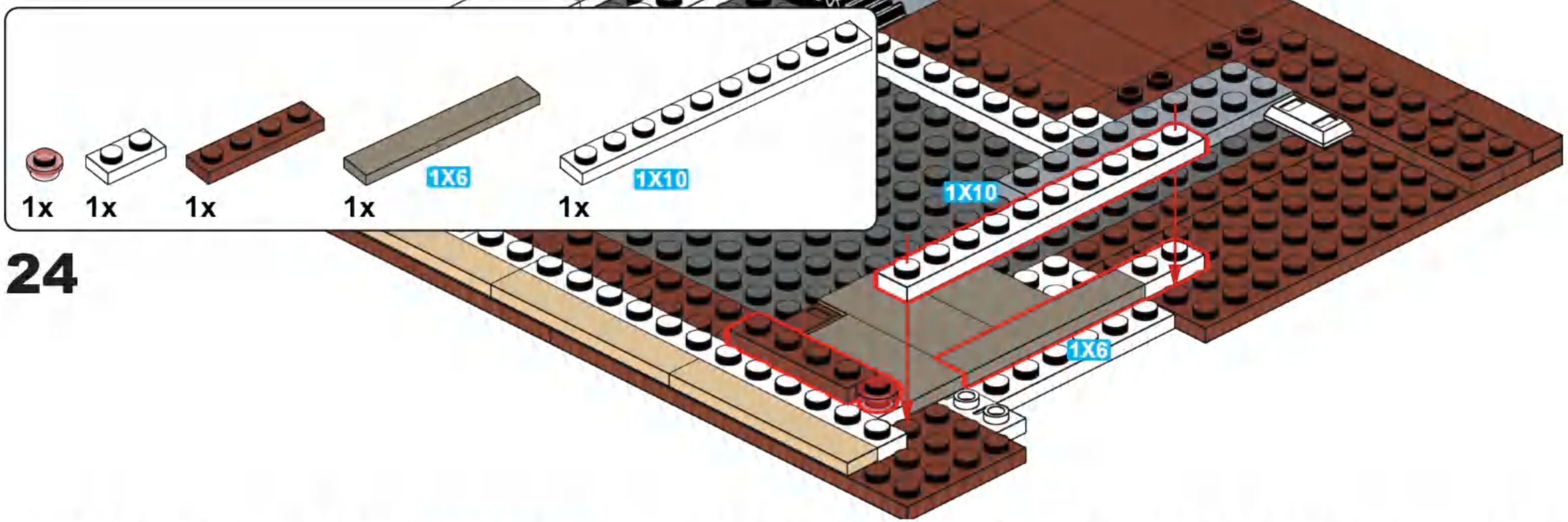

24

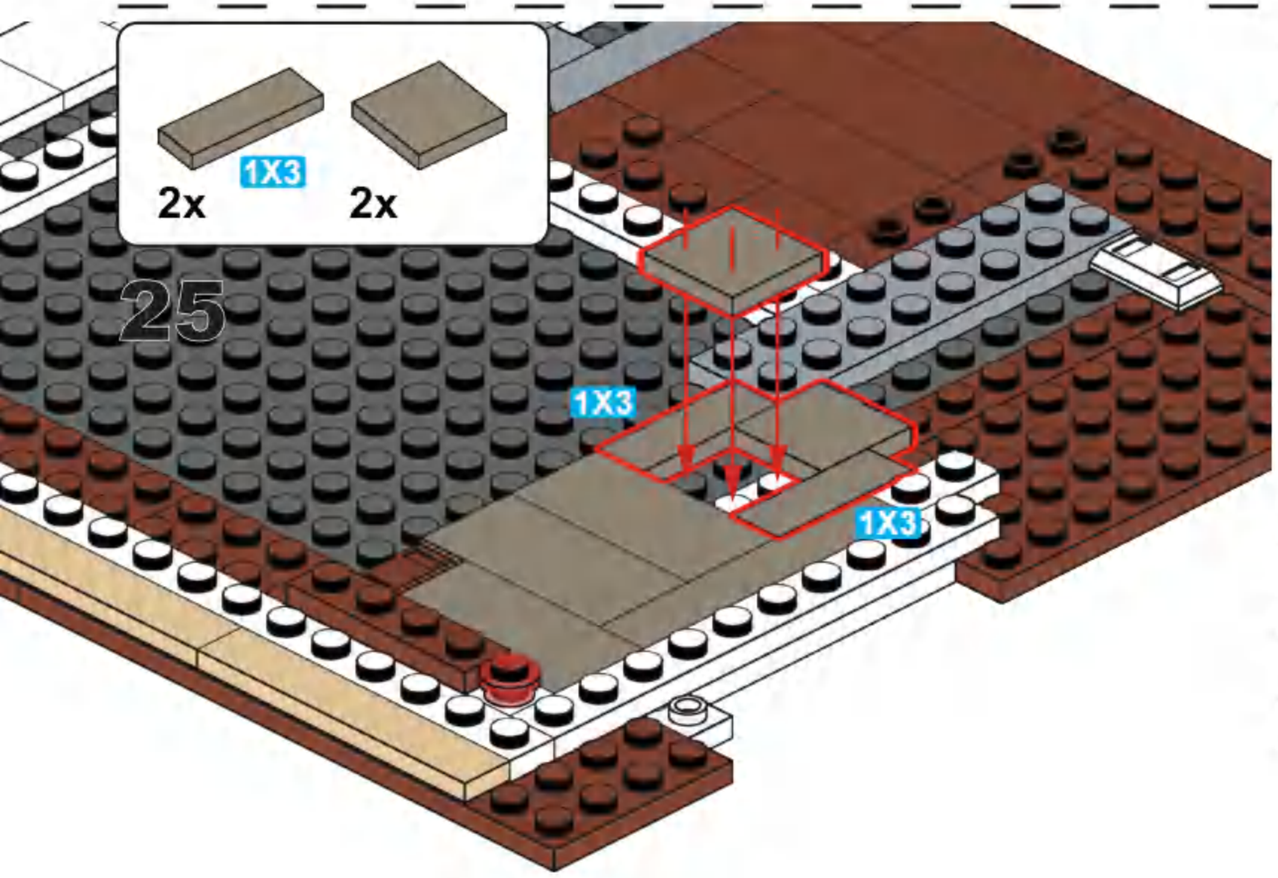

25

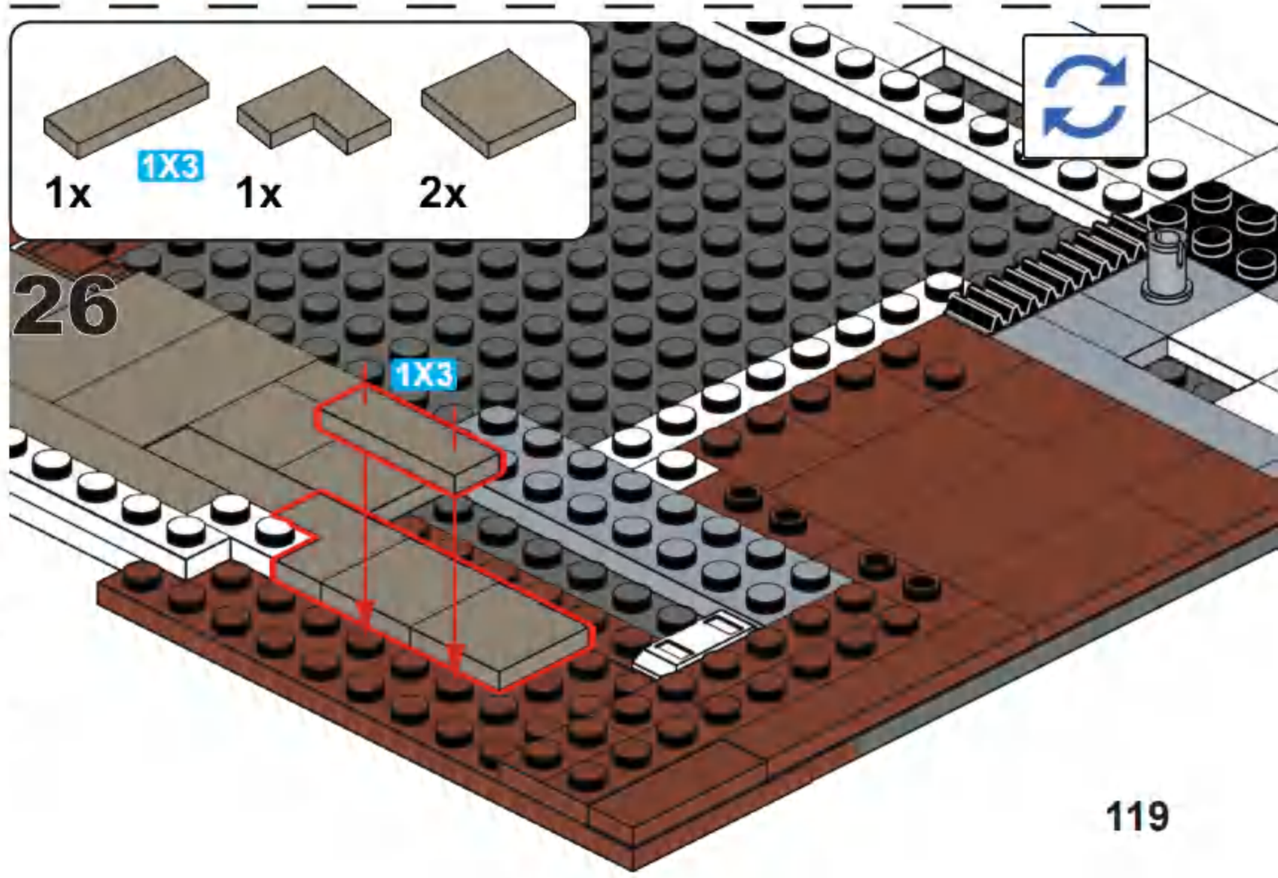

26

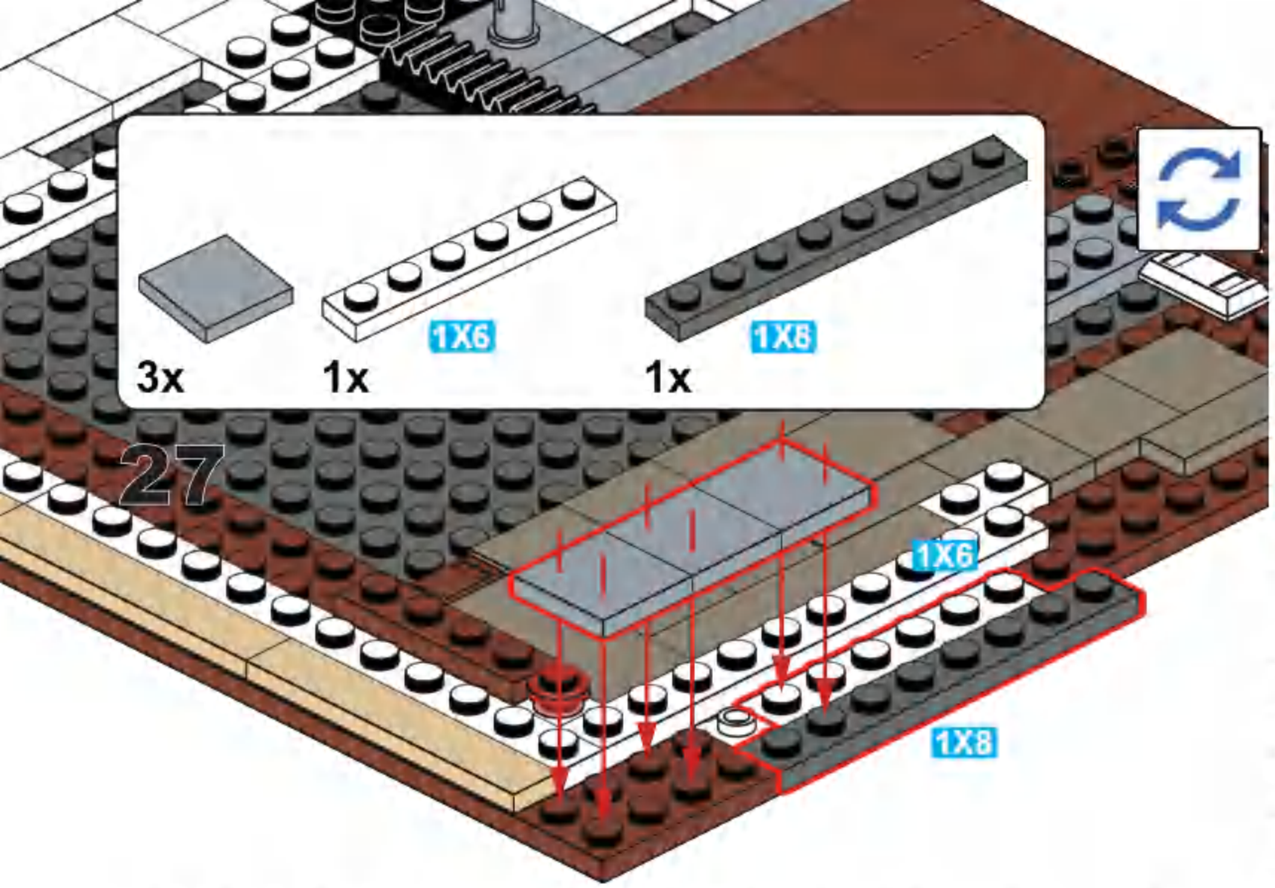
3x
1x
1X6
1x
1X6
27
1X6
1X8

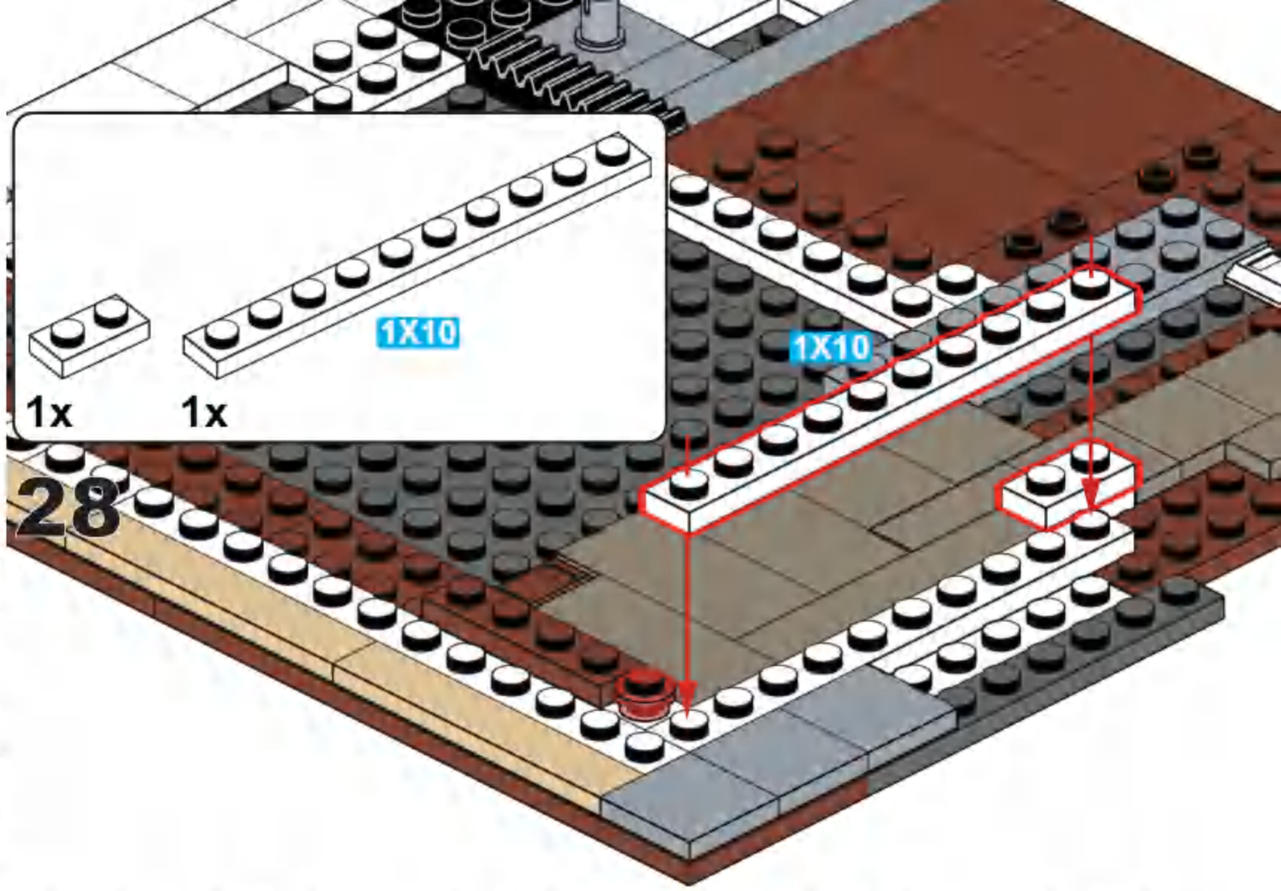
1x
1x
1X10
28
1X10

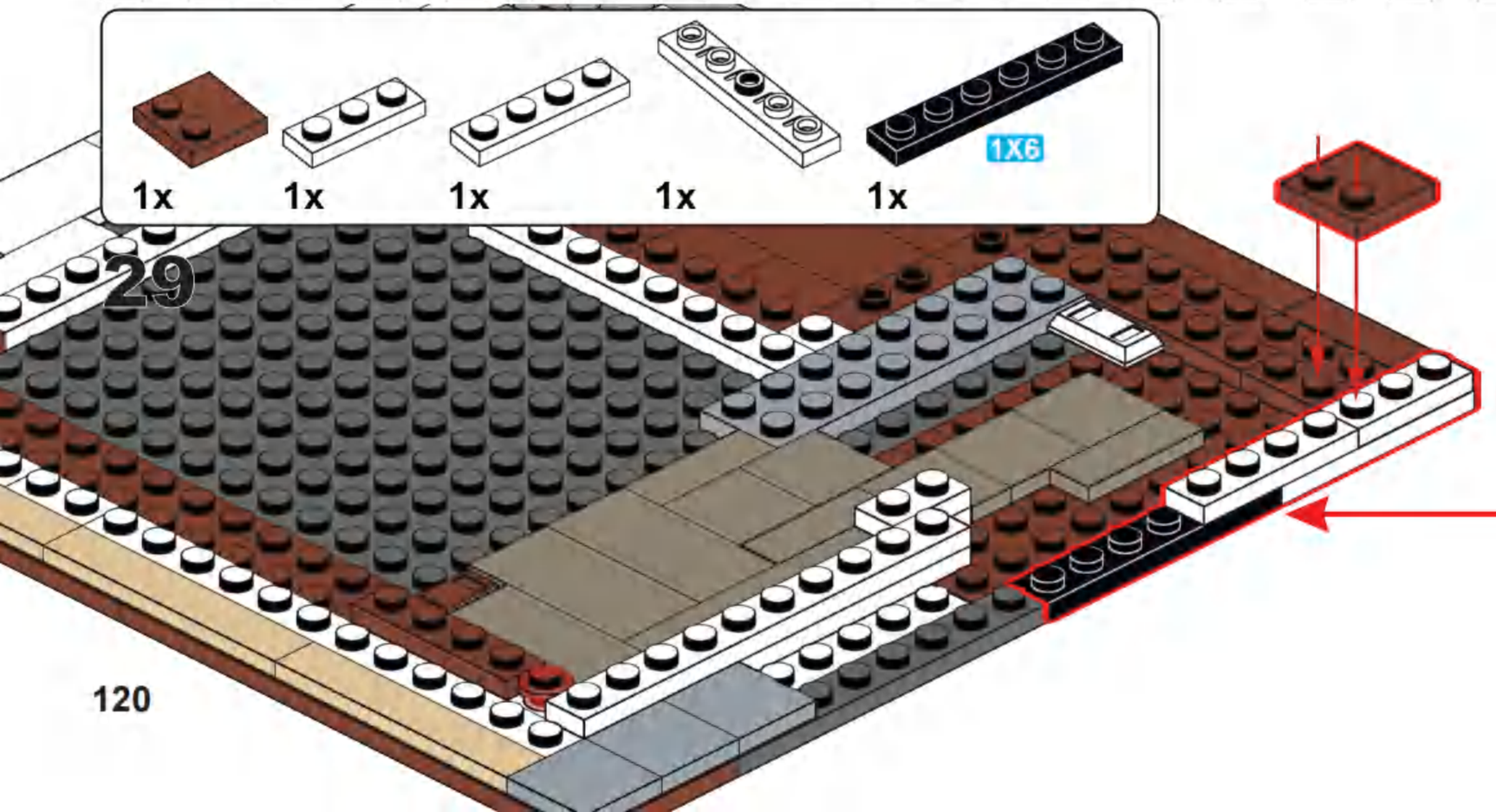
1x
1x
1x
1x
1x
1X6
29

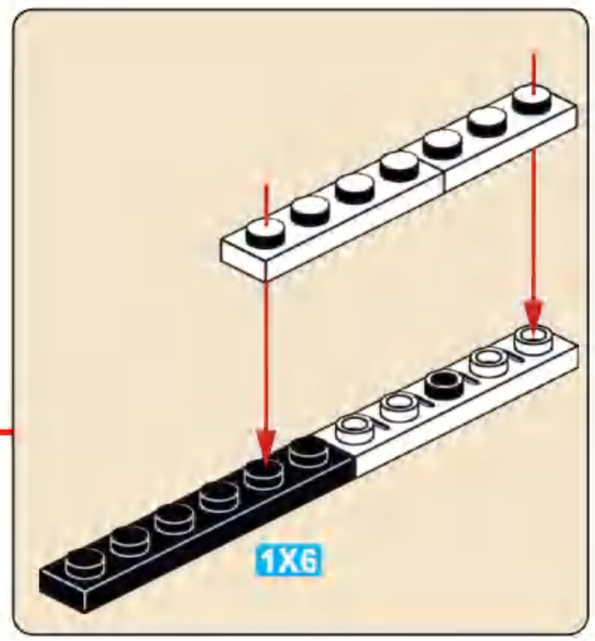
1X6

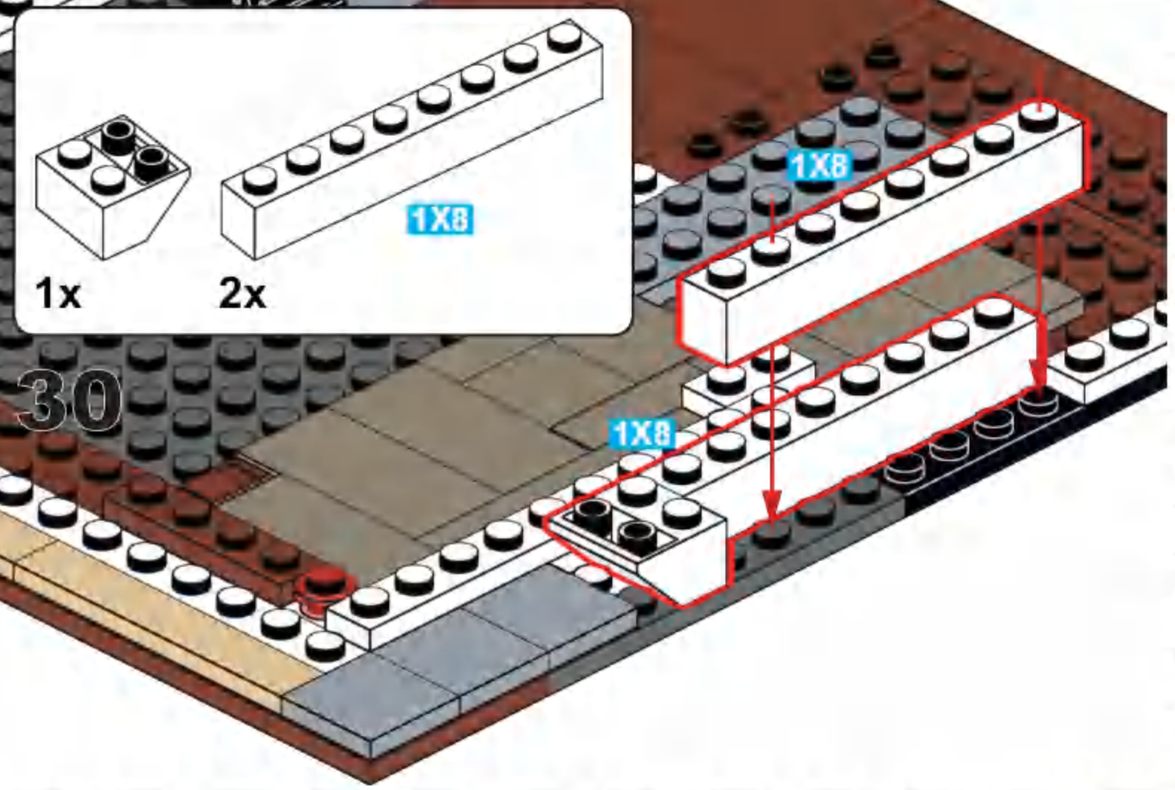
1x
2x
1X8
30
1X8
1X8

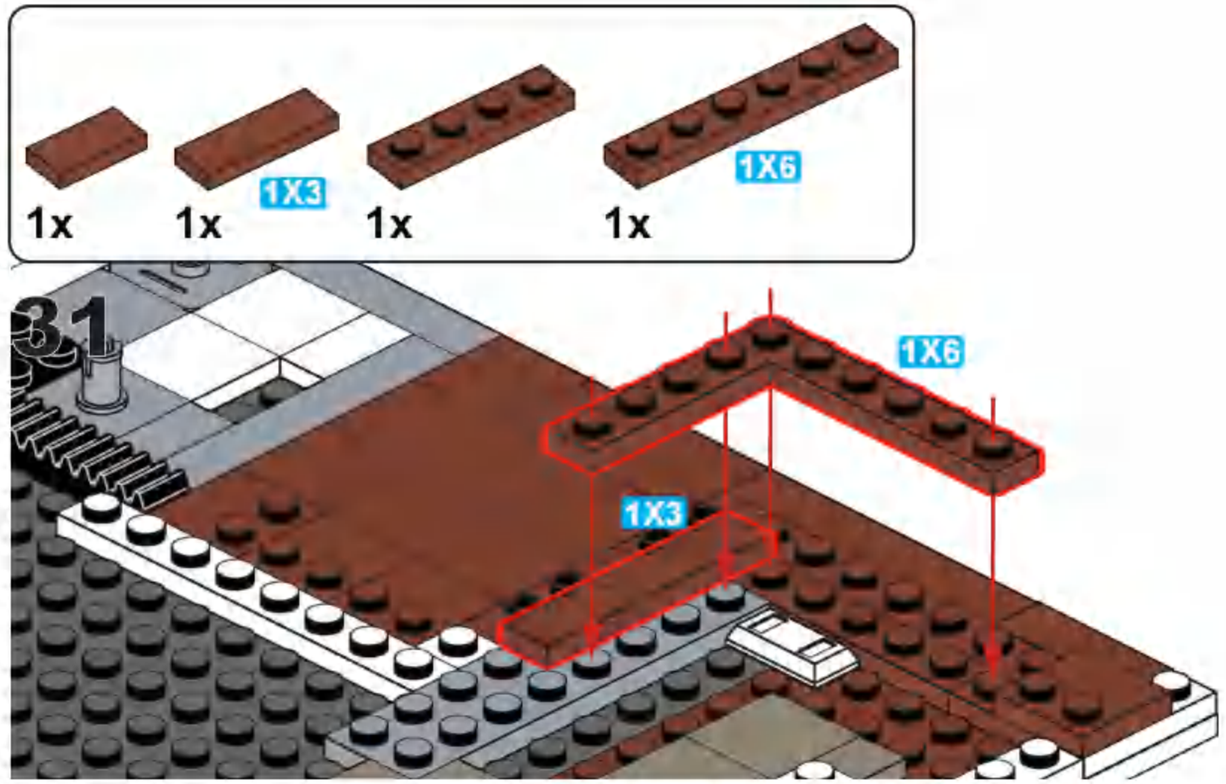
1x
1x
1X3
1x
1x
1X6
31
1X6
1X3

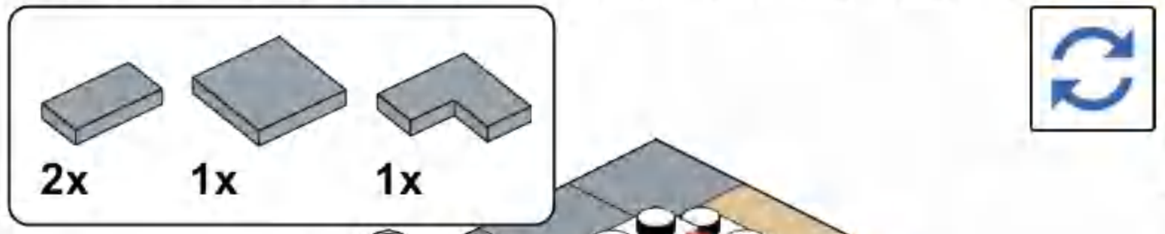
2x
1x
1x

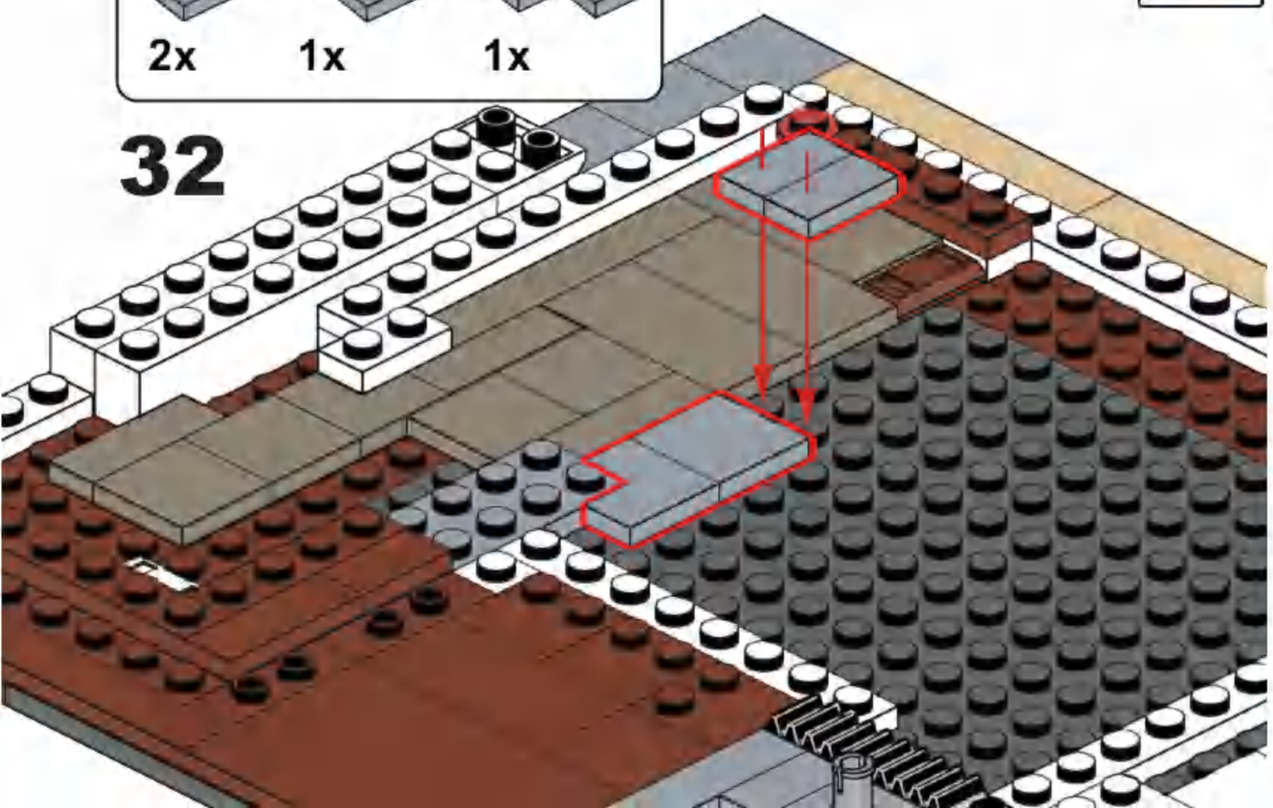
32

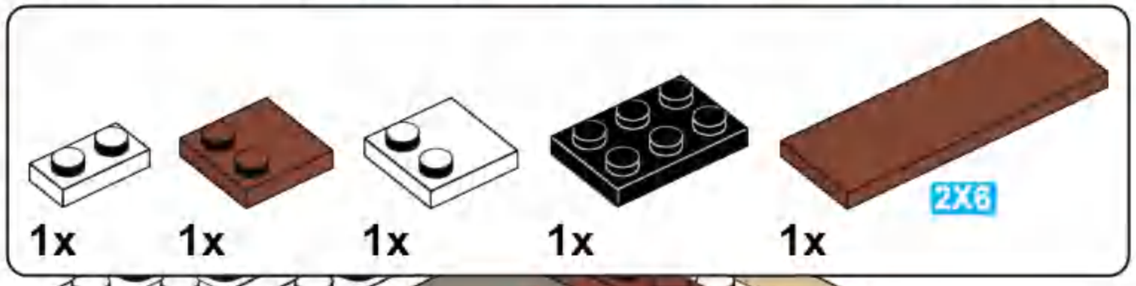
1x
1x
1x
1x
1x
2X6

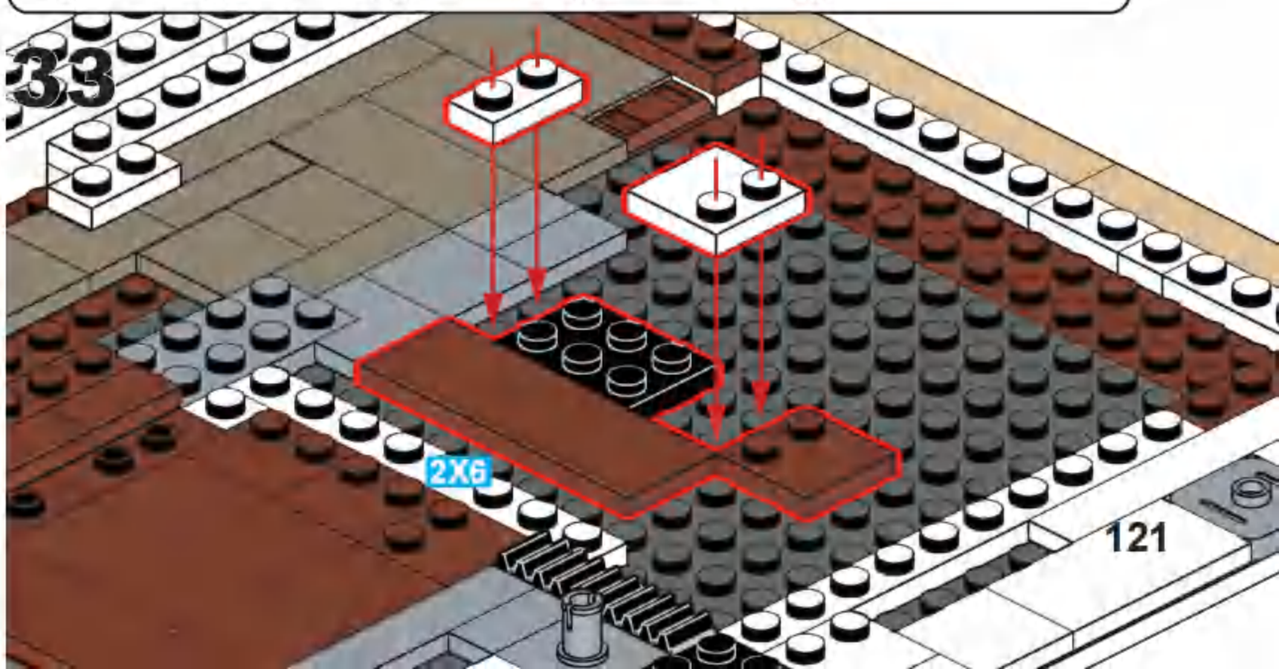
33
2X6

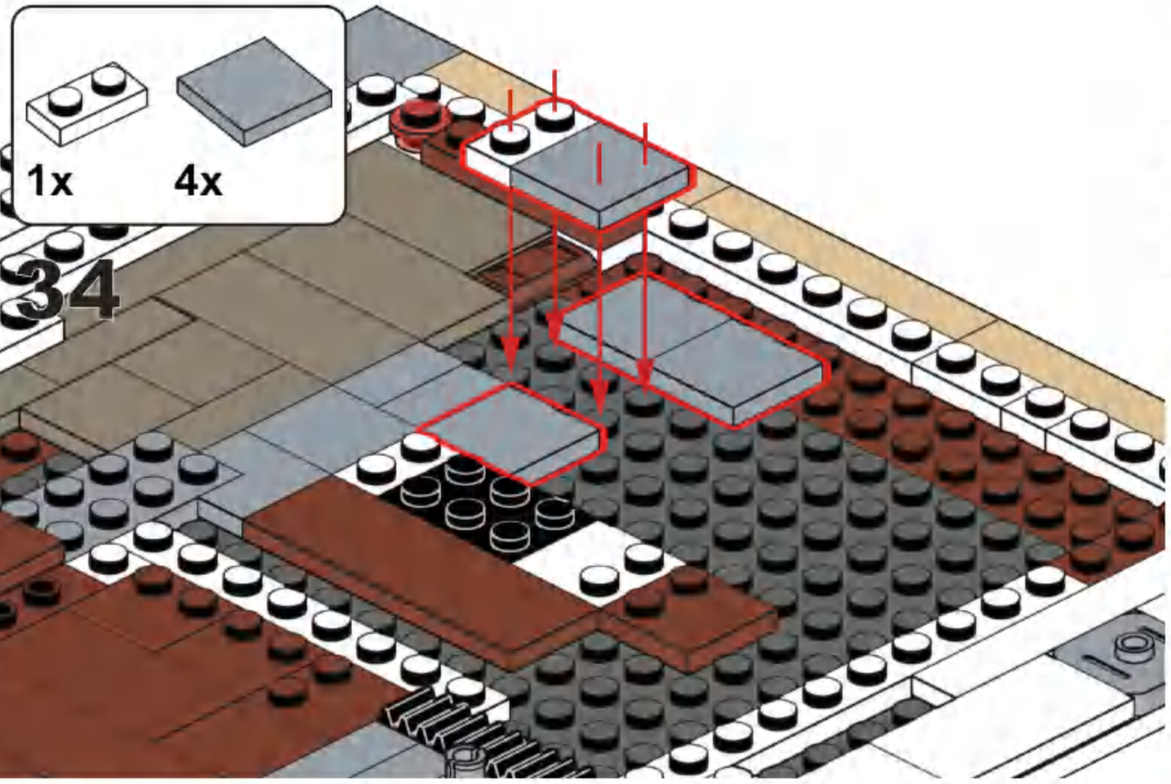

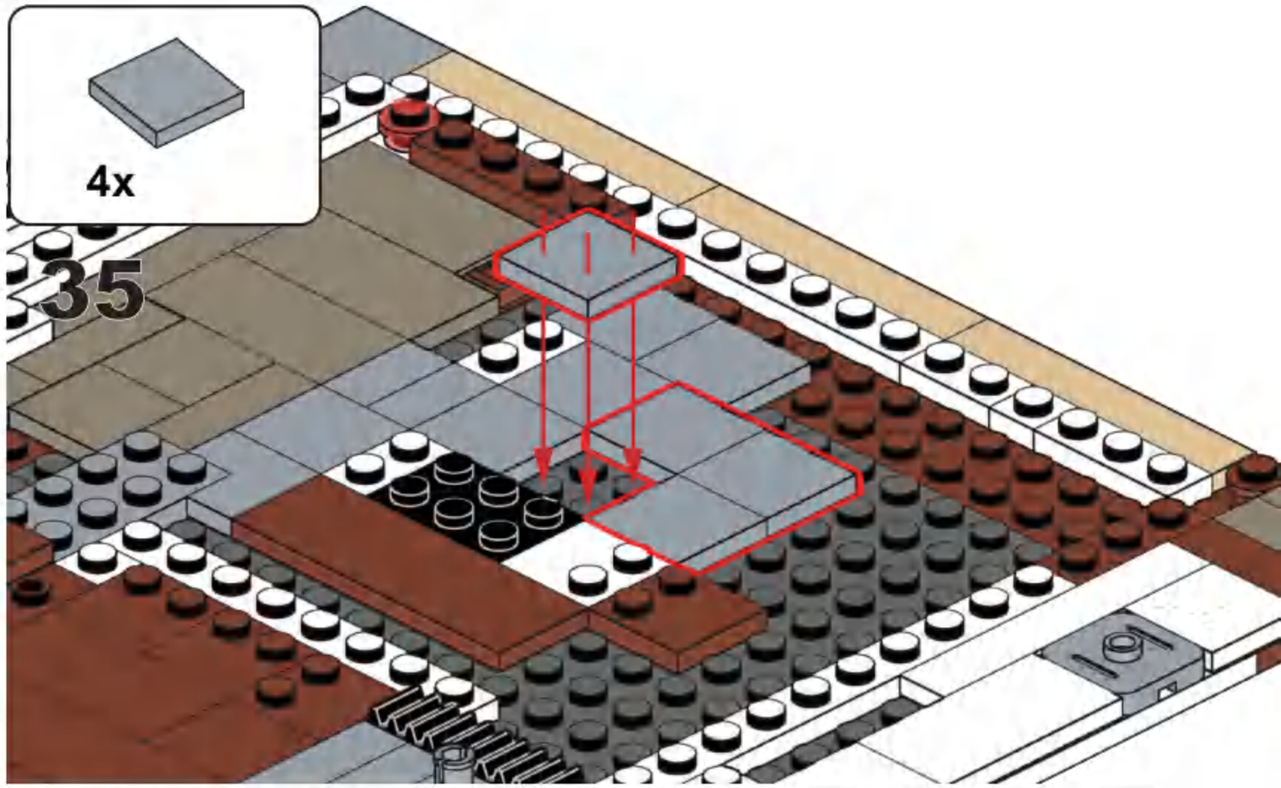

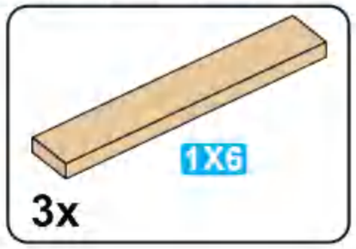

36

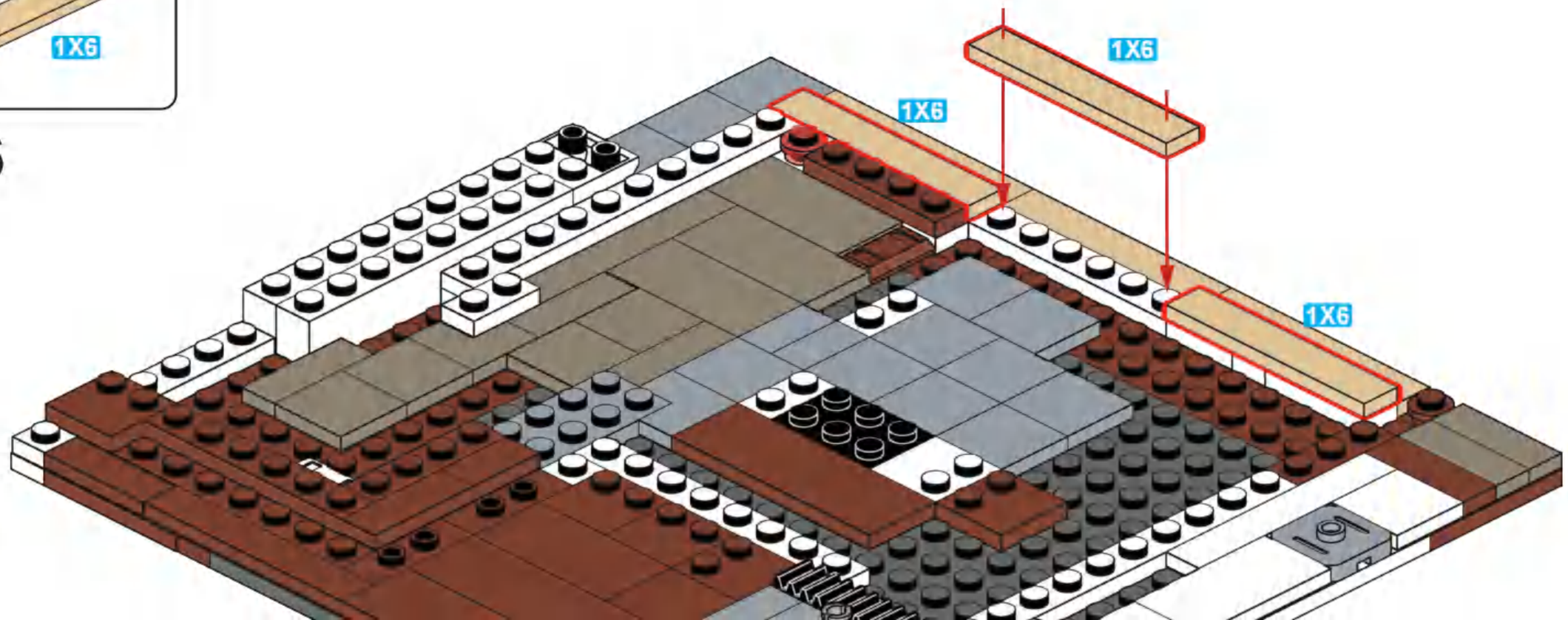

1x 2x

37

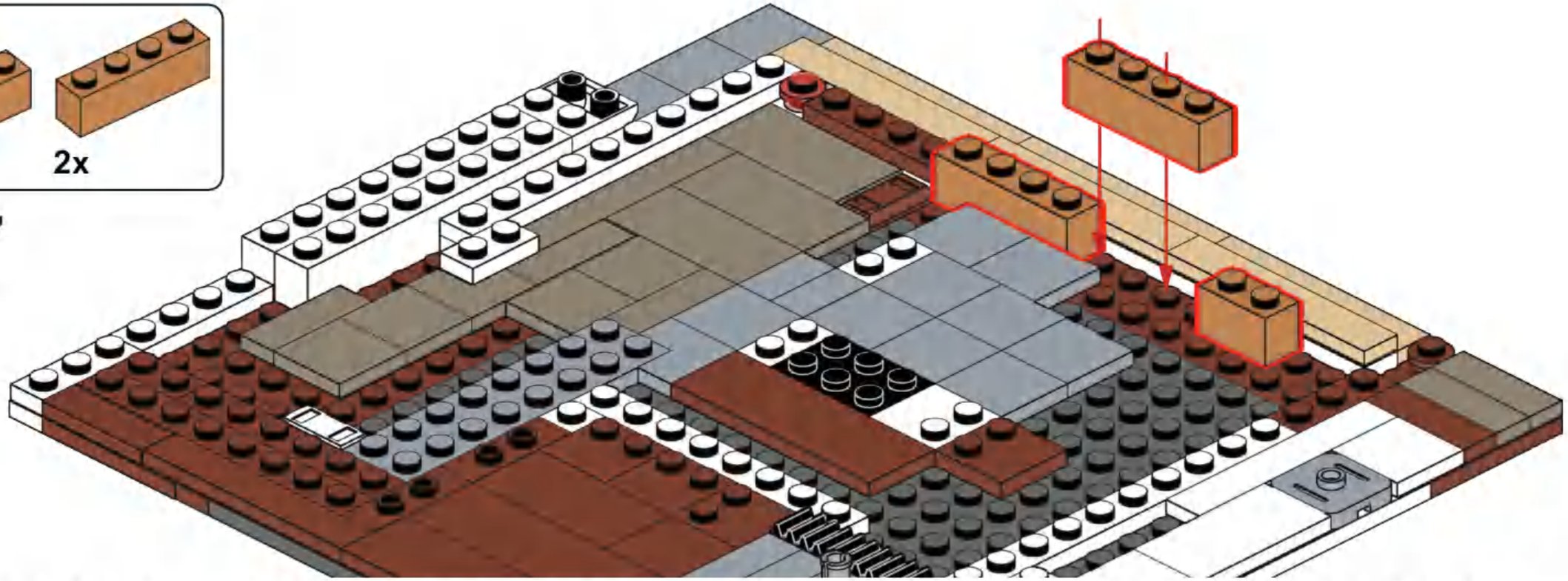

1x 1x

1X8

38

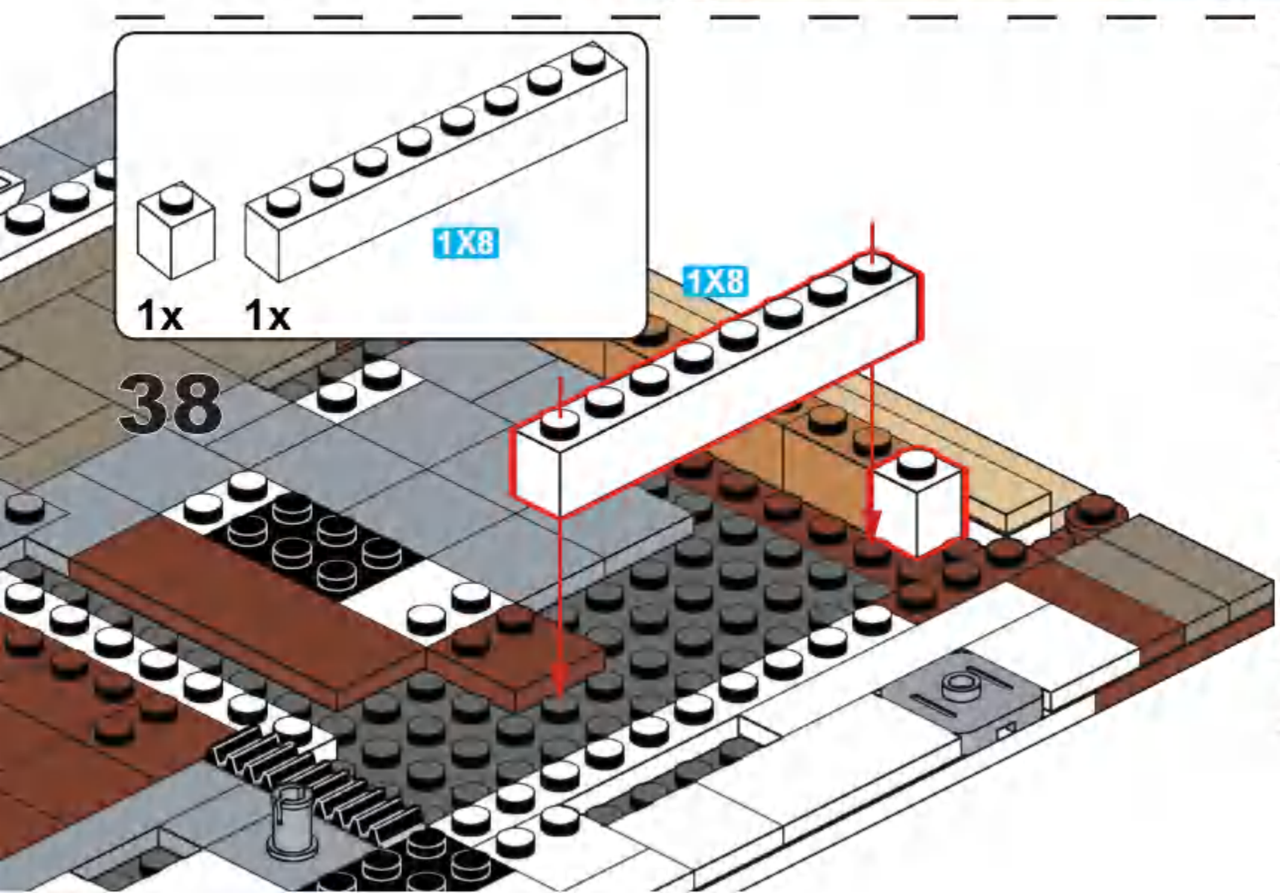

1x

1X8

39

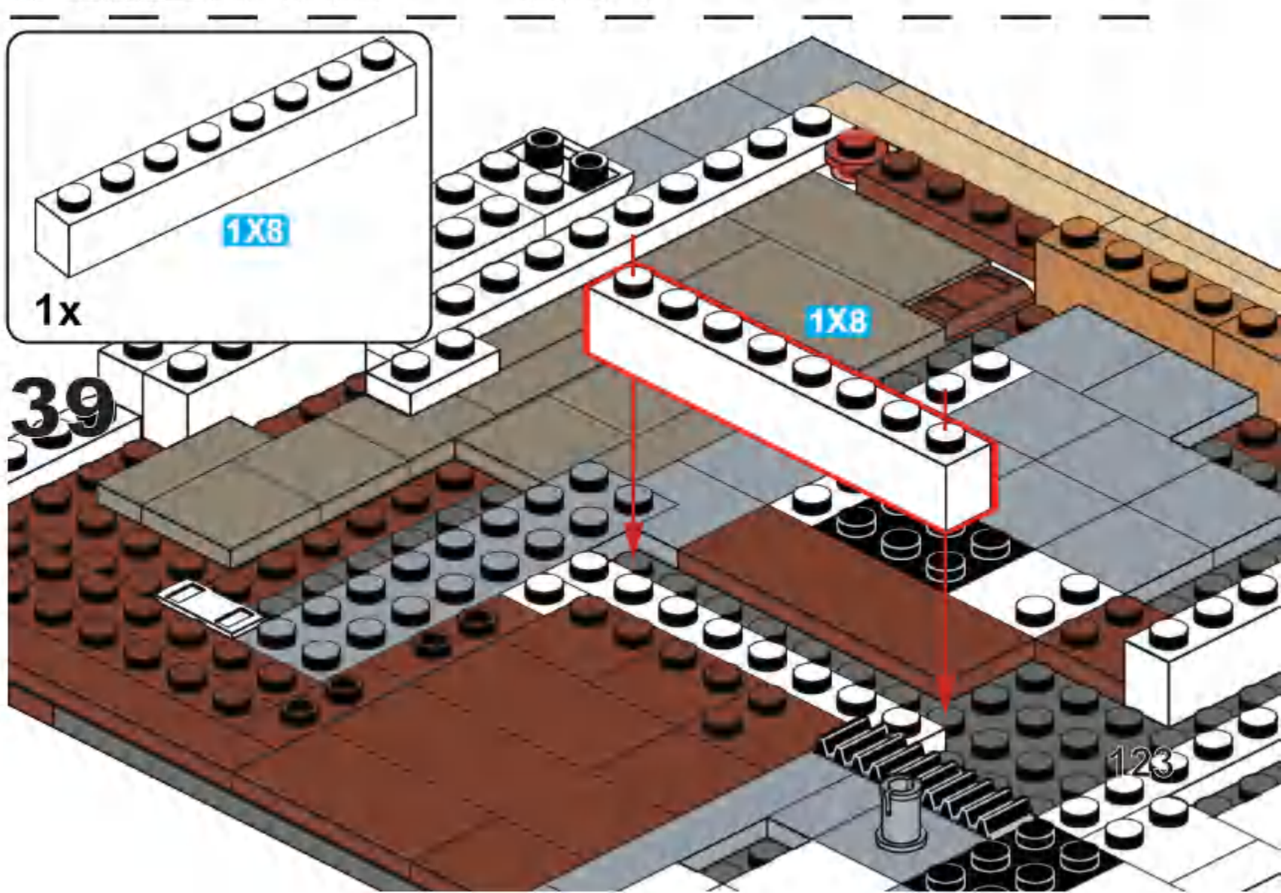

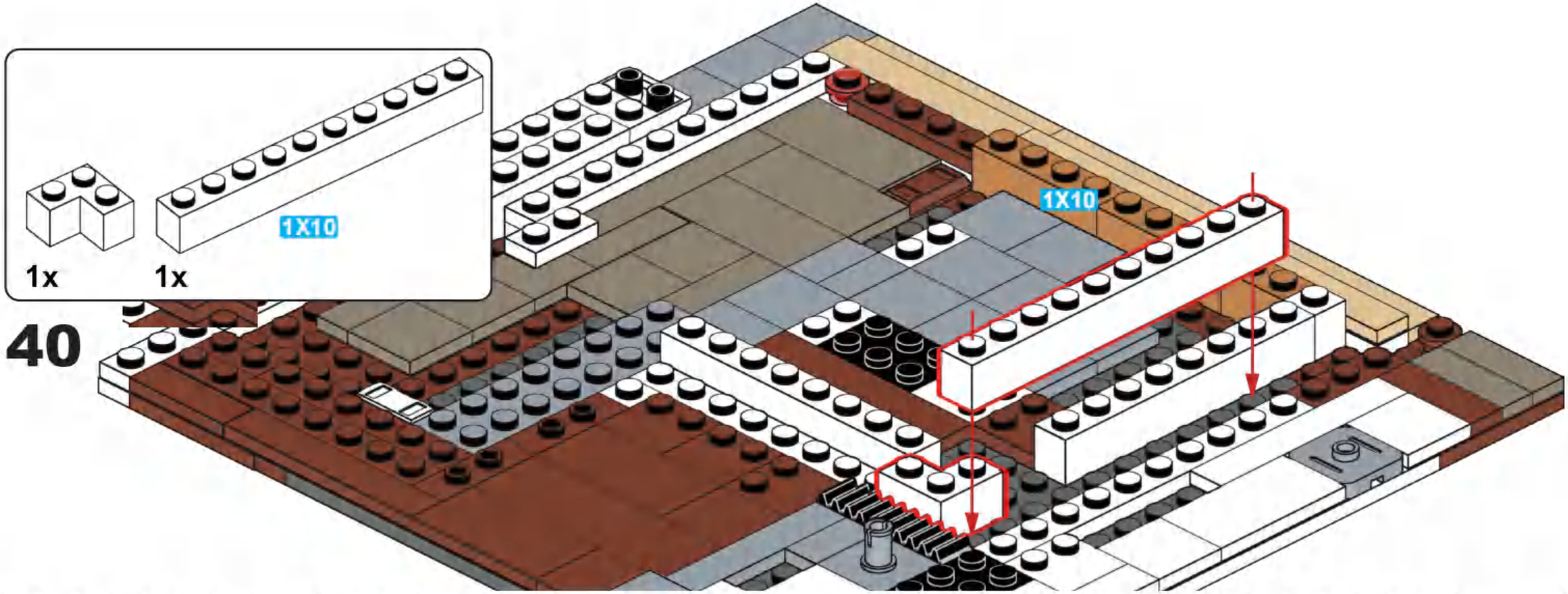
1x
1x
1X10
40
1X10

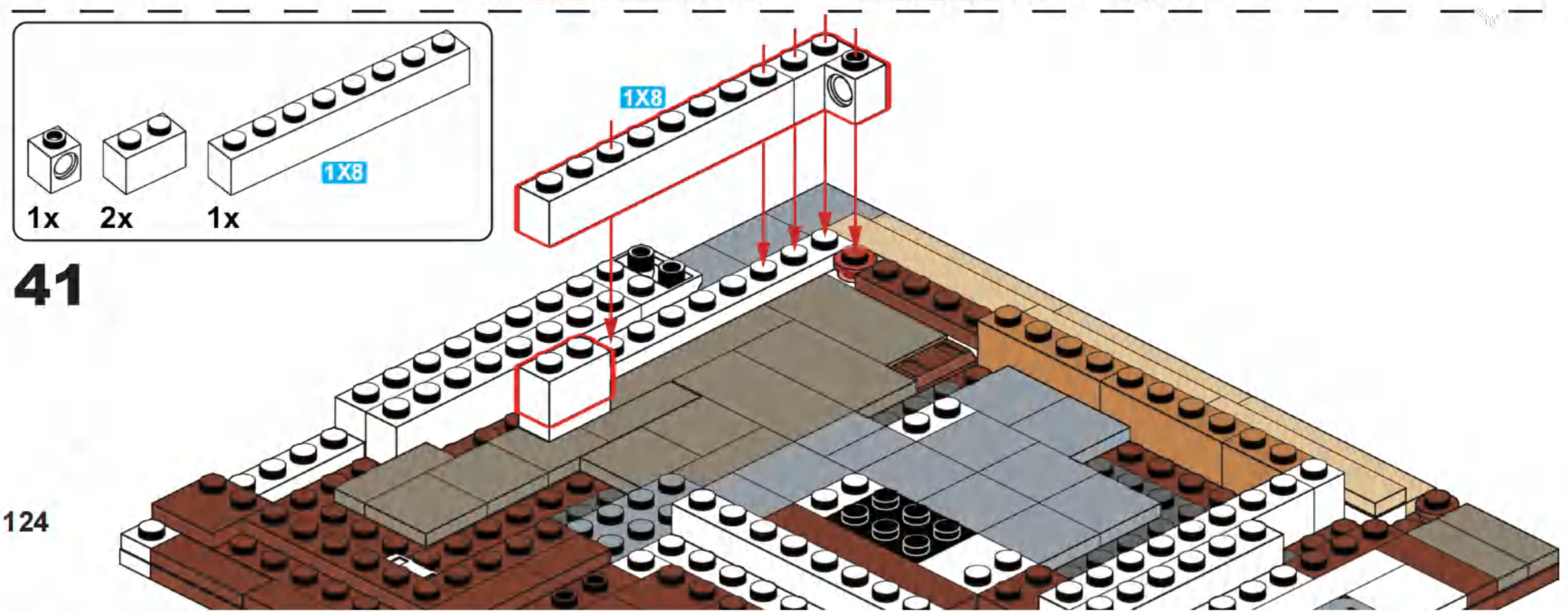
1x
2x
1x
1X8
41
1X8

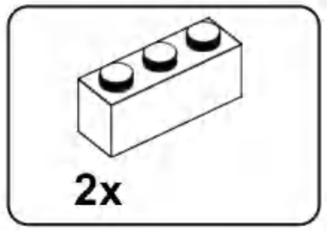

42

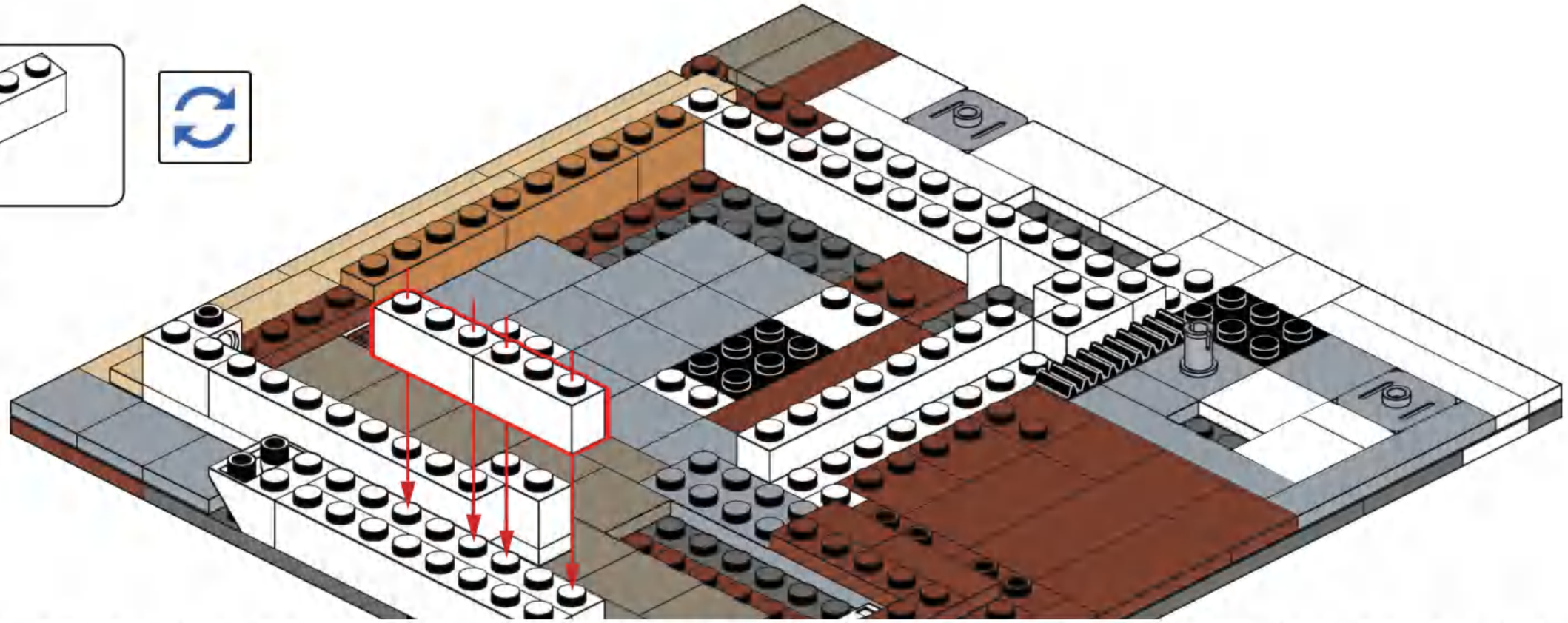

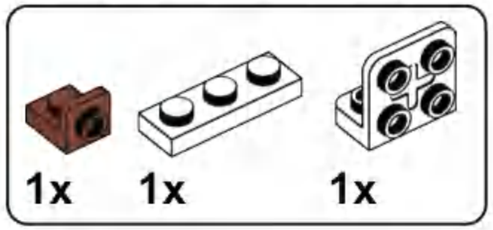

43

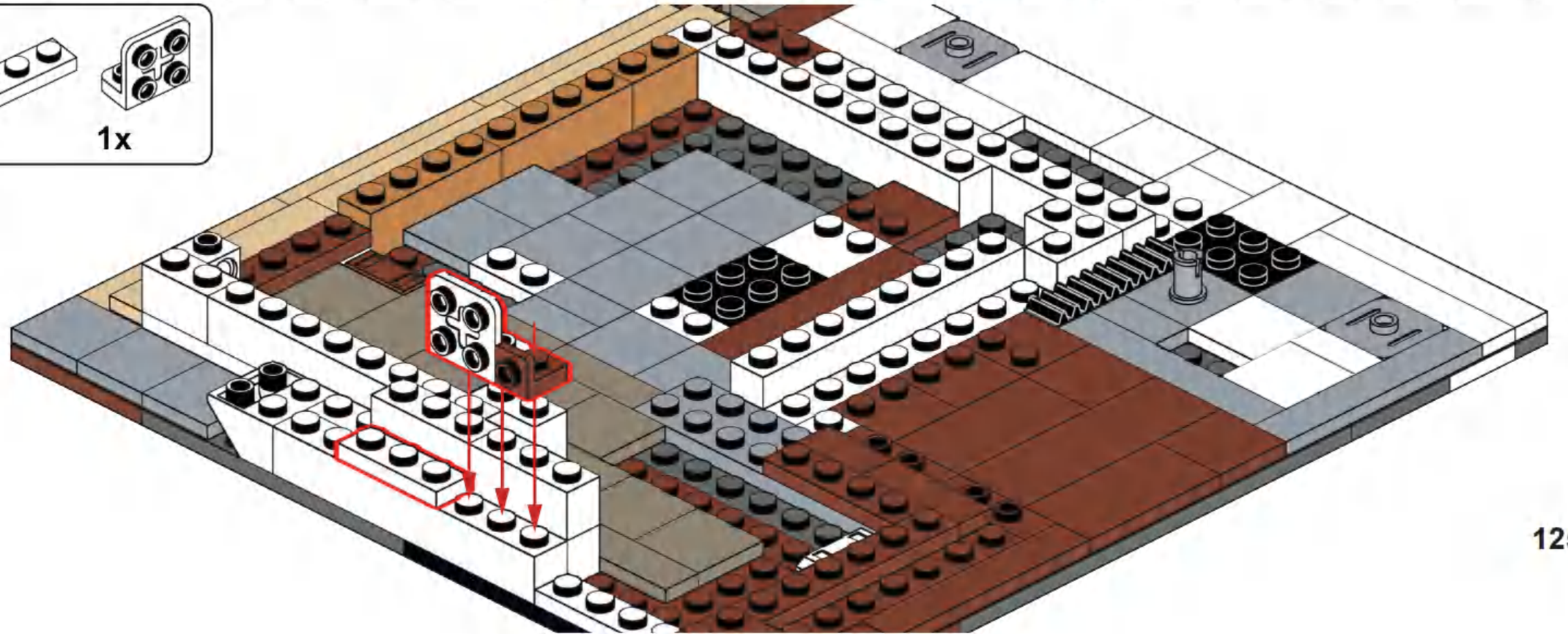

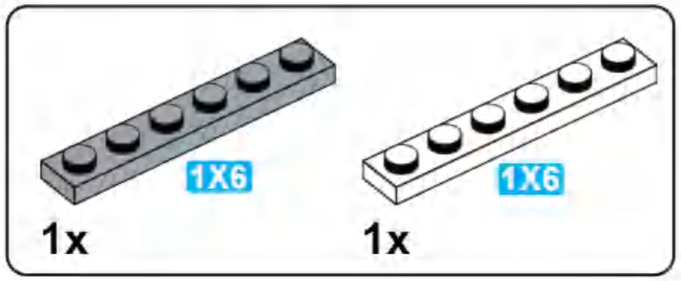

44

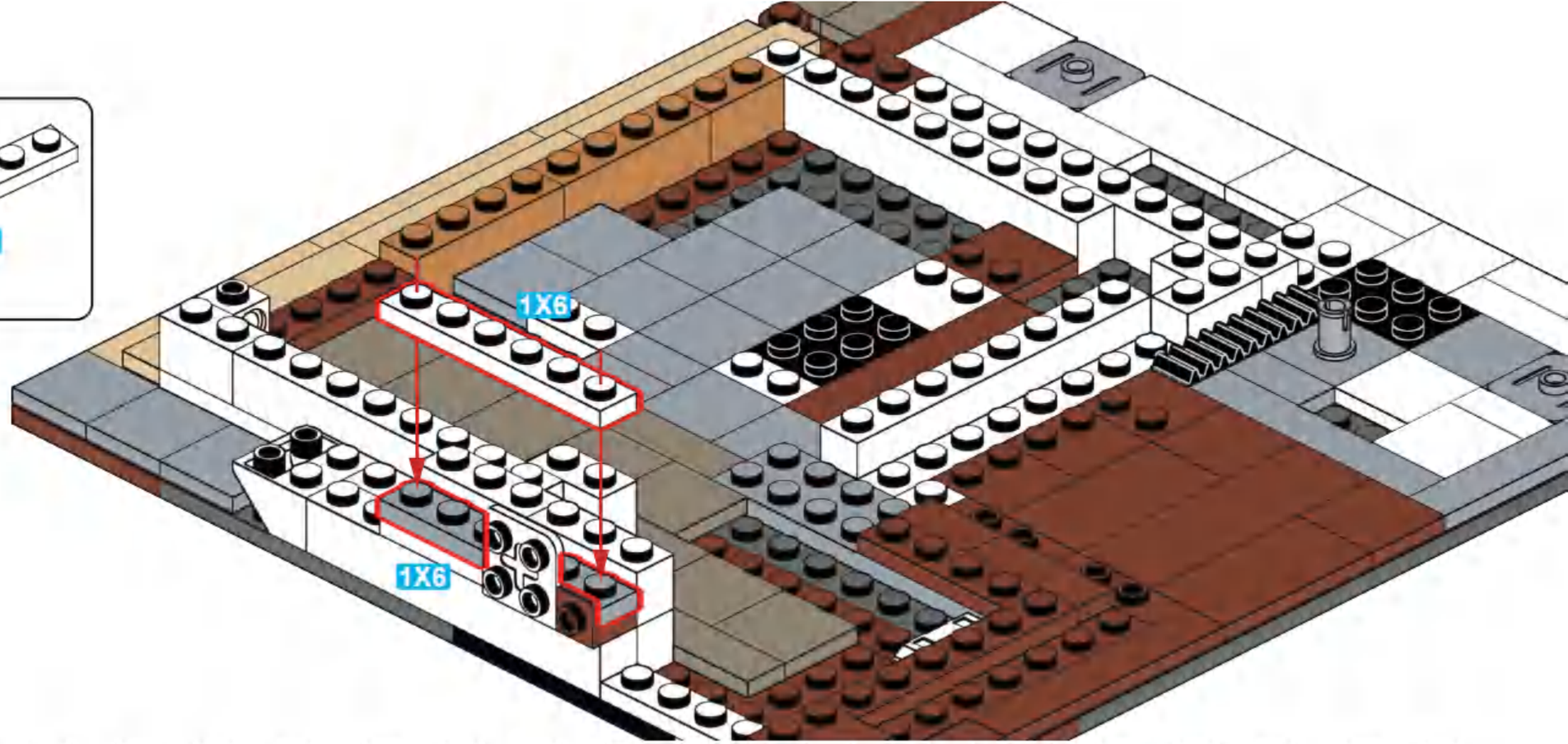

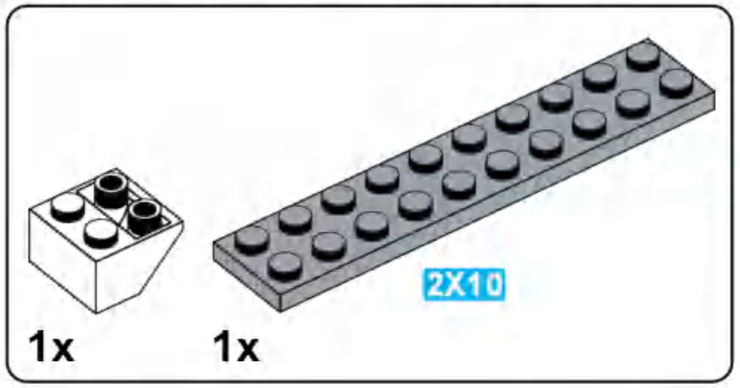

45

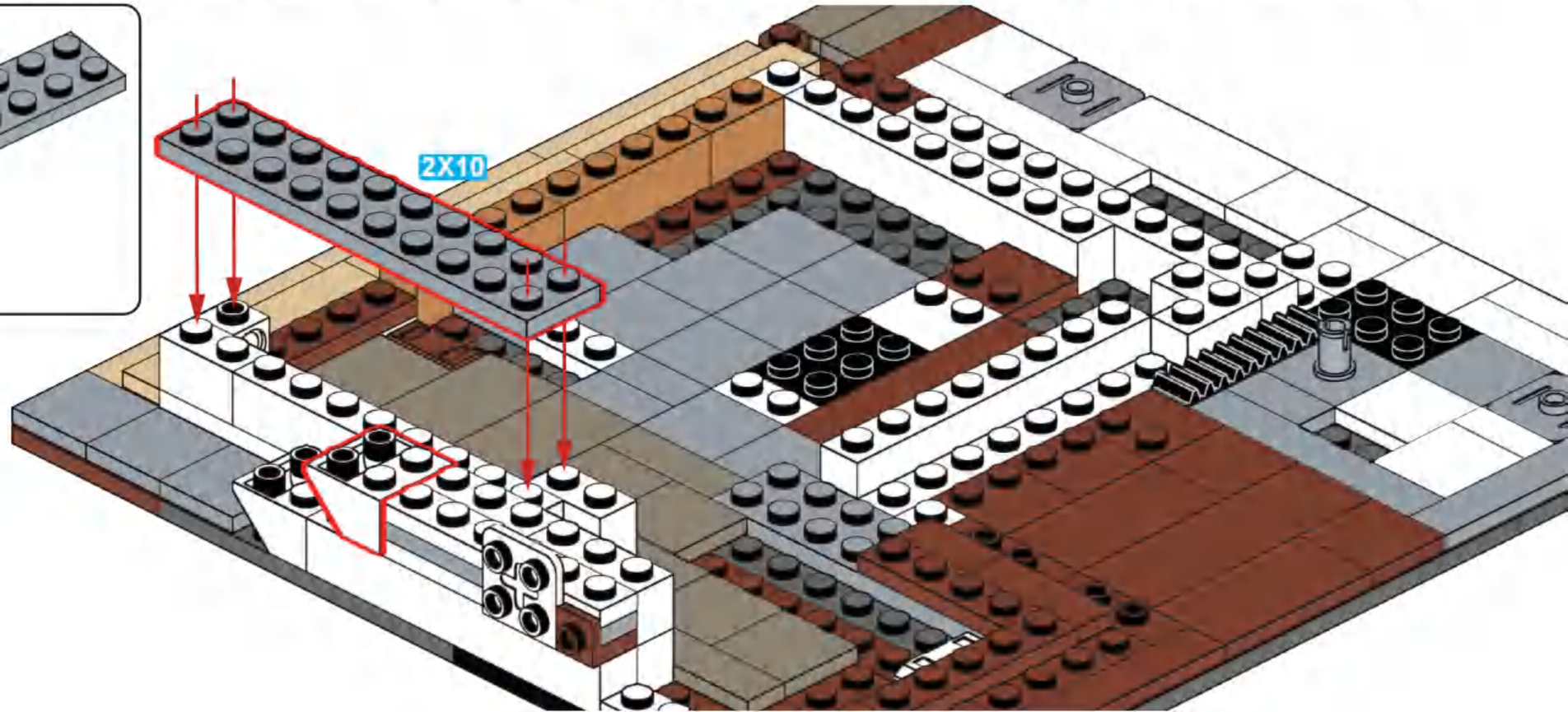

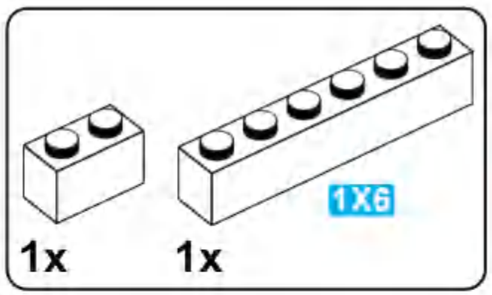

46

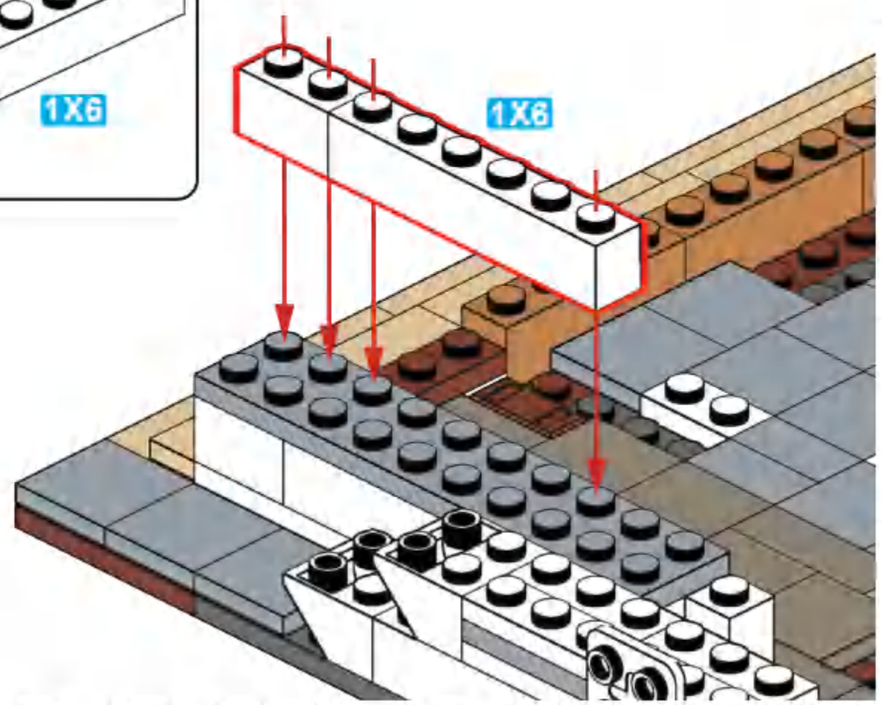

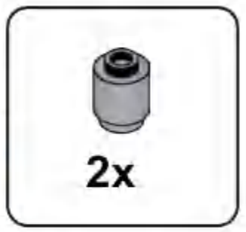

47

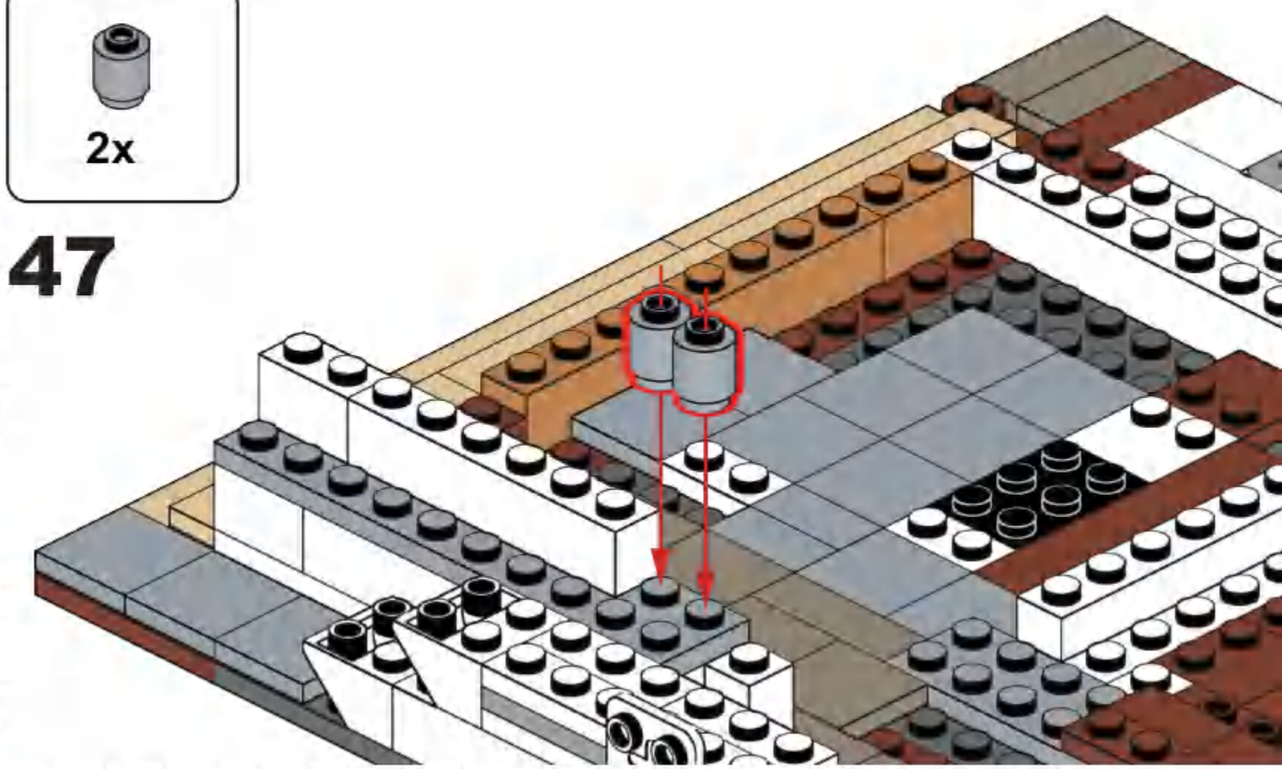

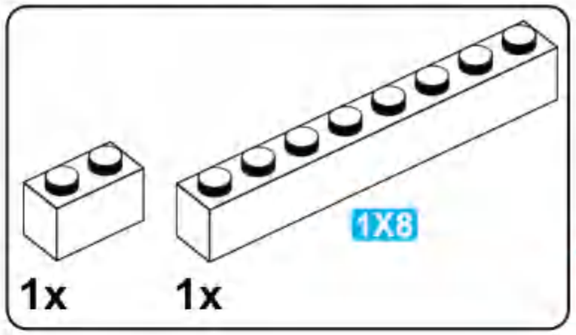

48

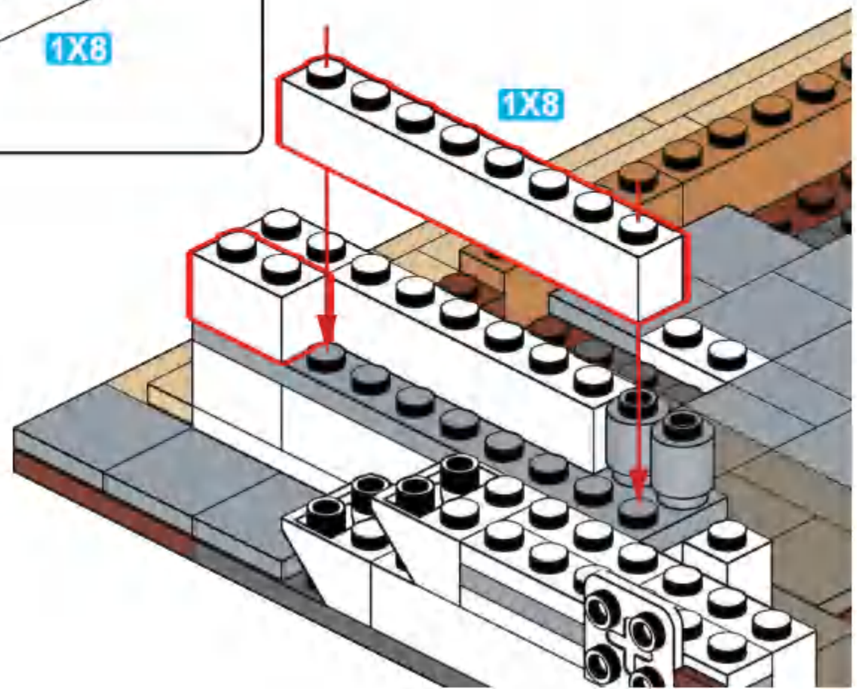

49

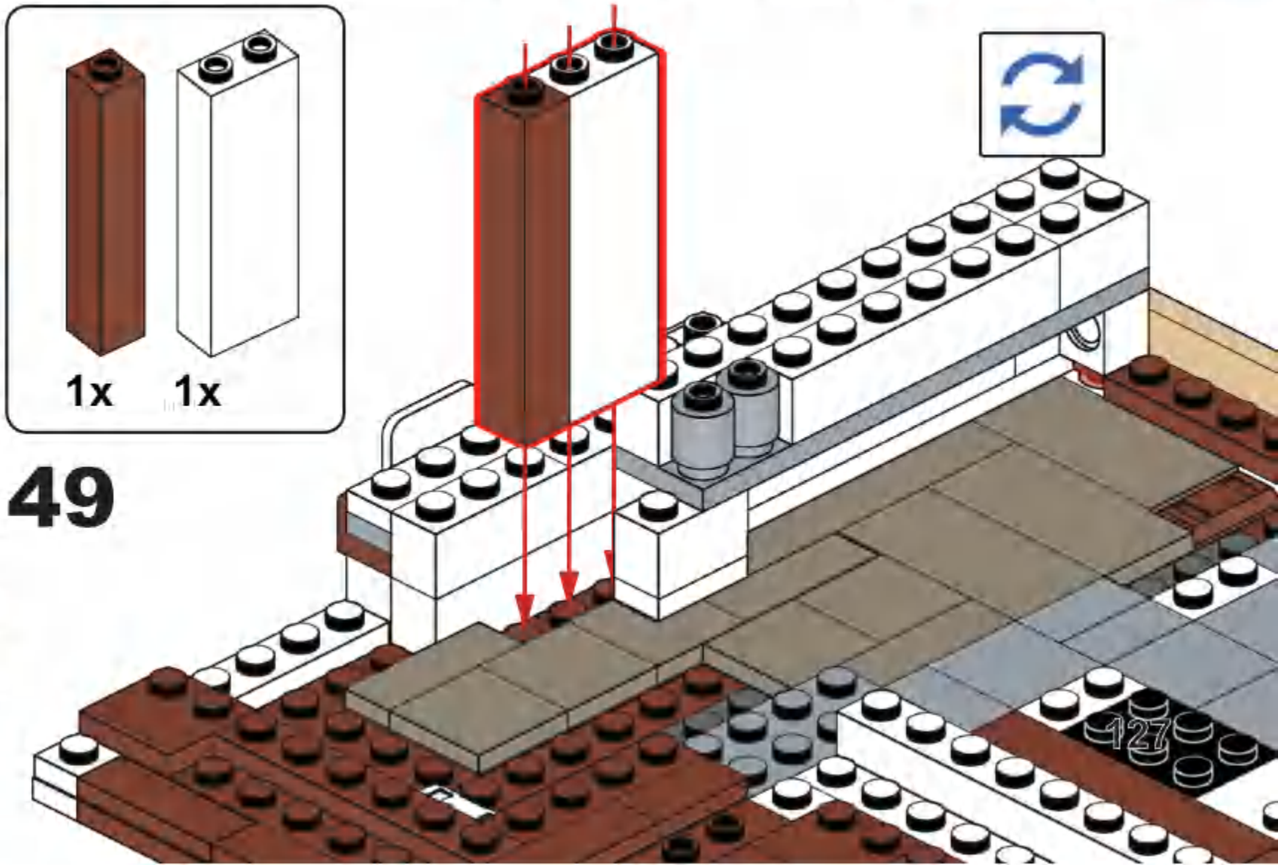

1x 1x

50

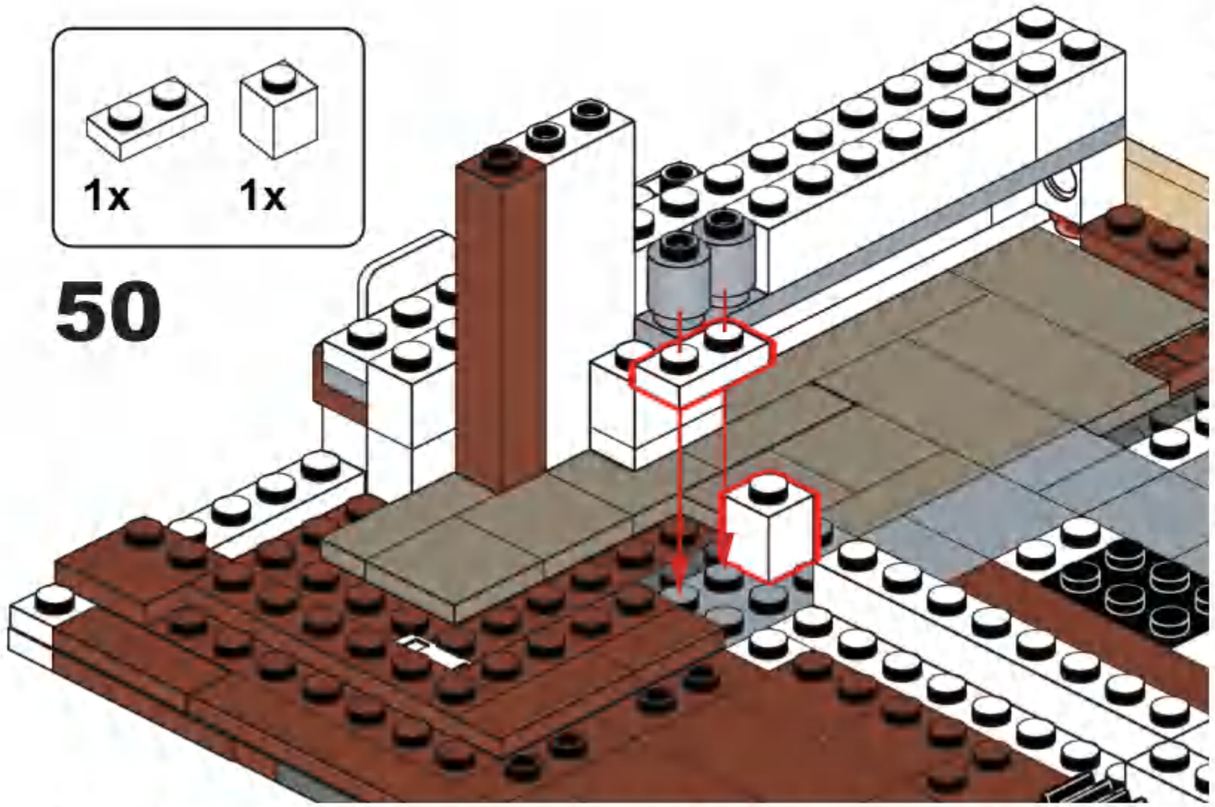

2x 3x

51

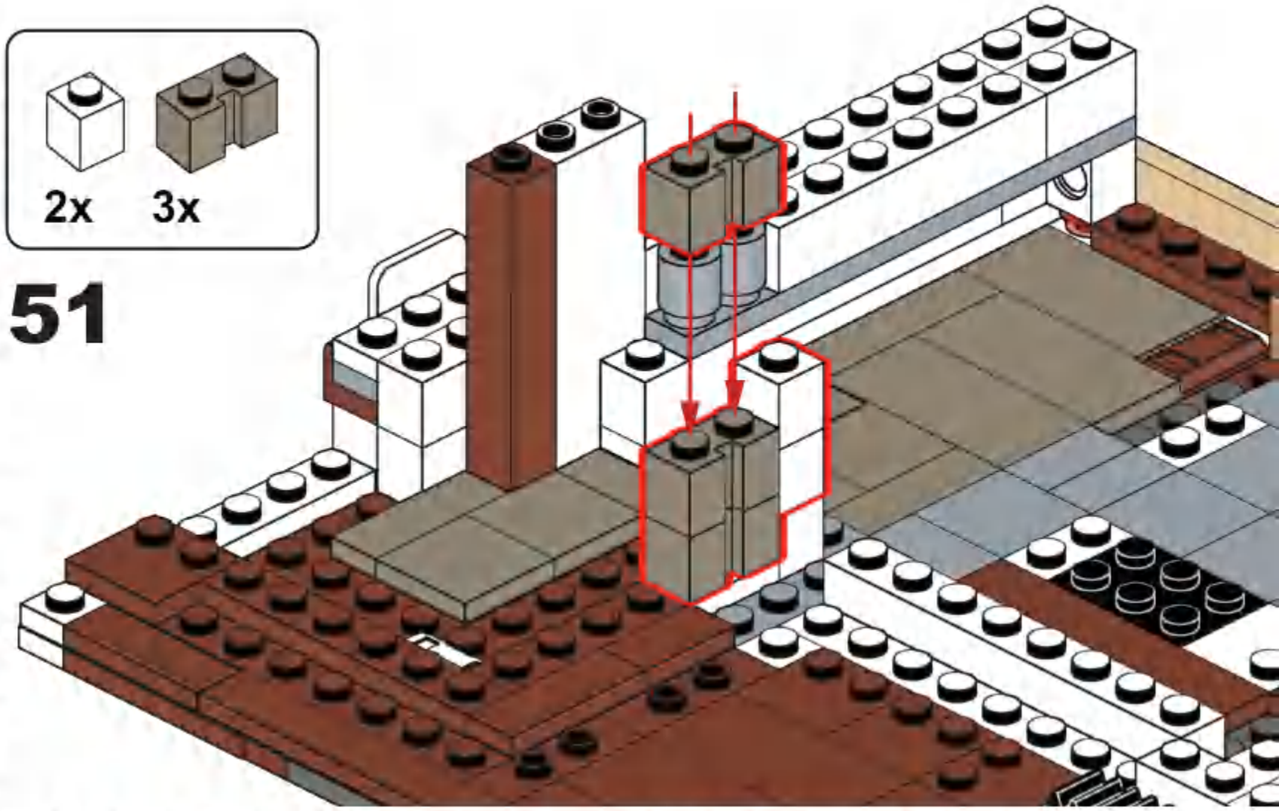

1x 1x 1x

1X6

52

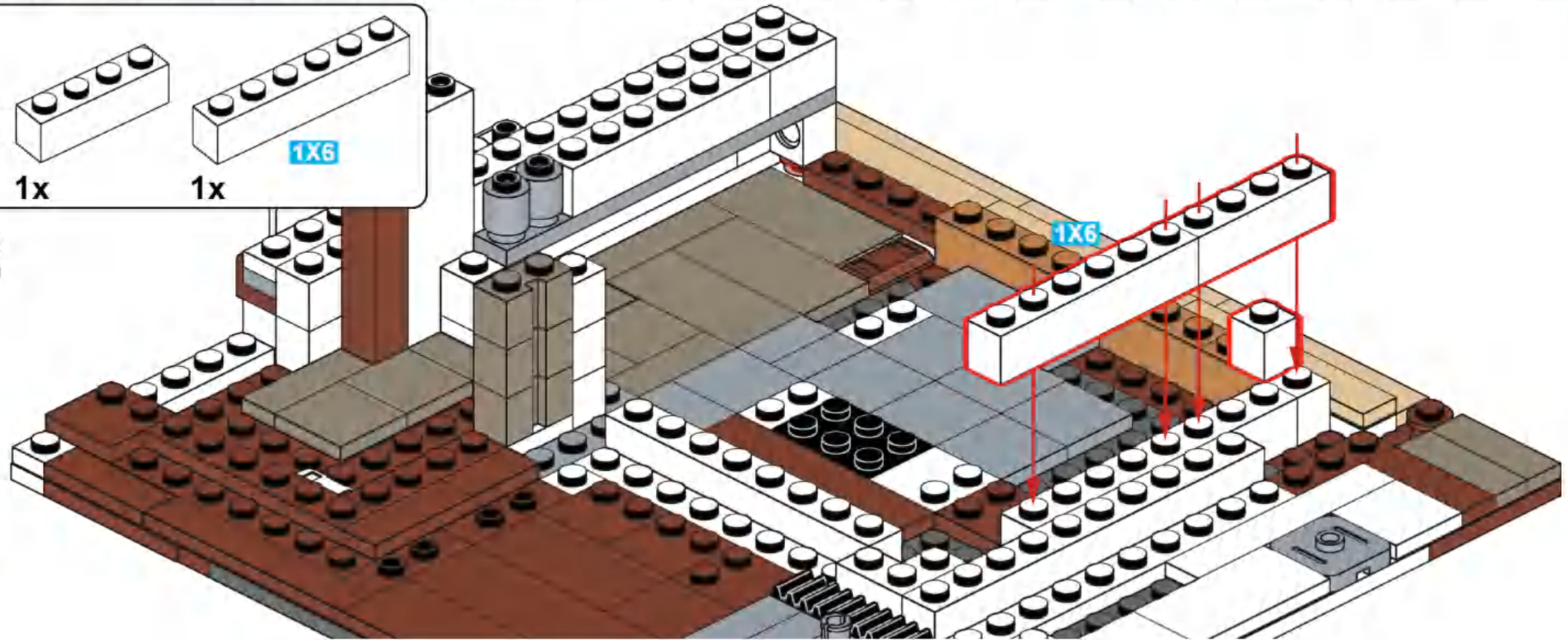

1x 1x

1X8

53

1X8

2x

54

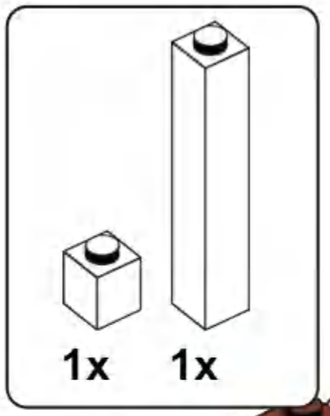

55

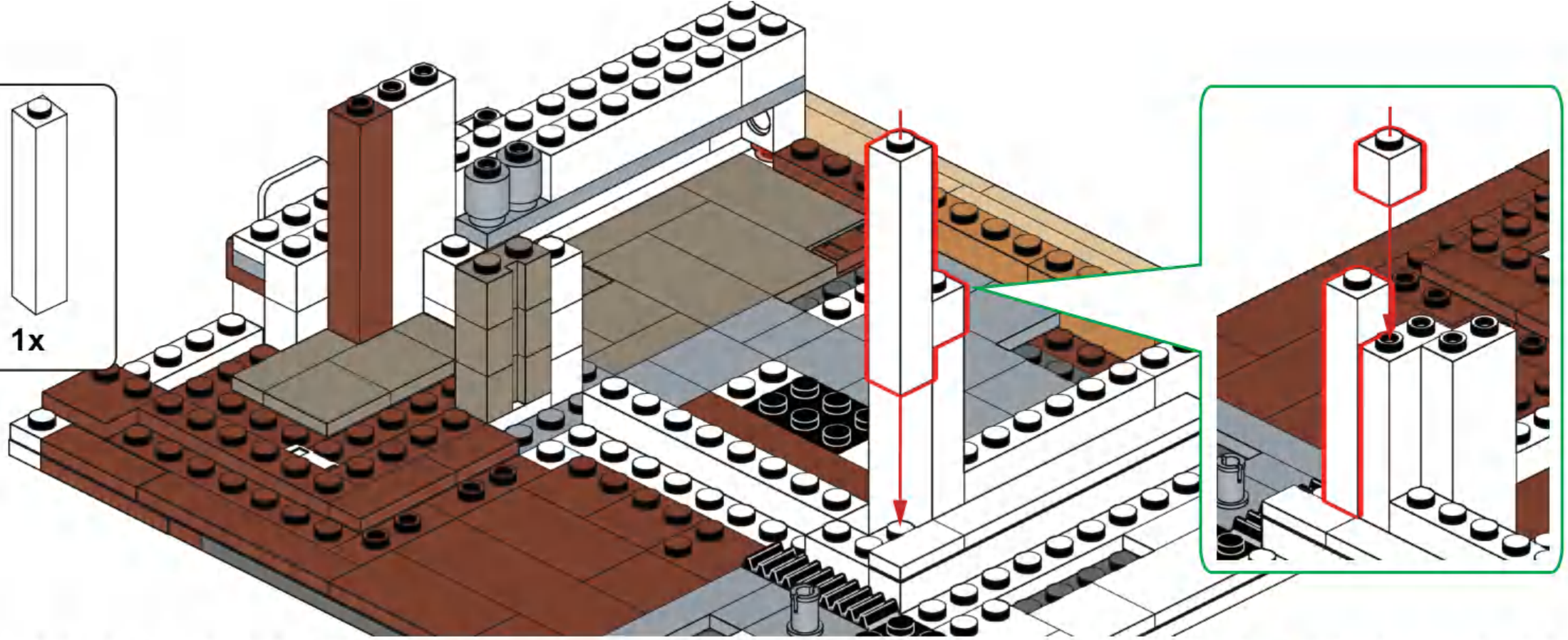

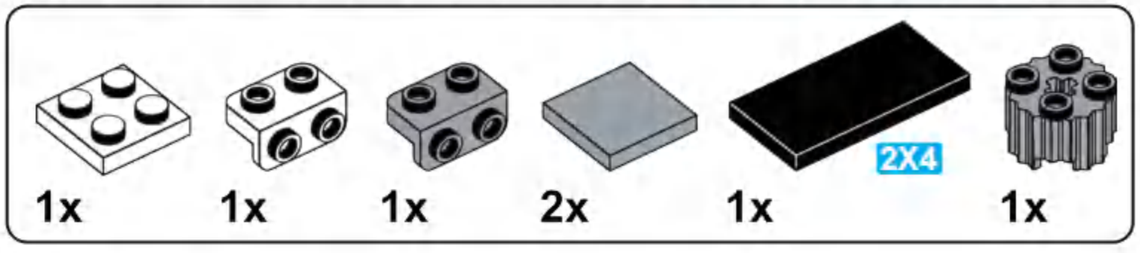

56

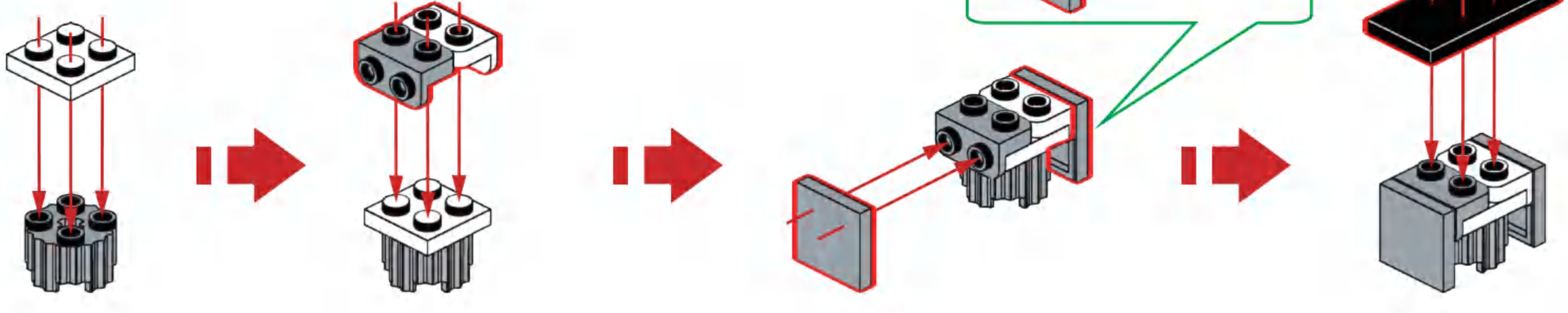

57

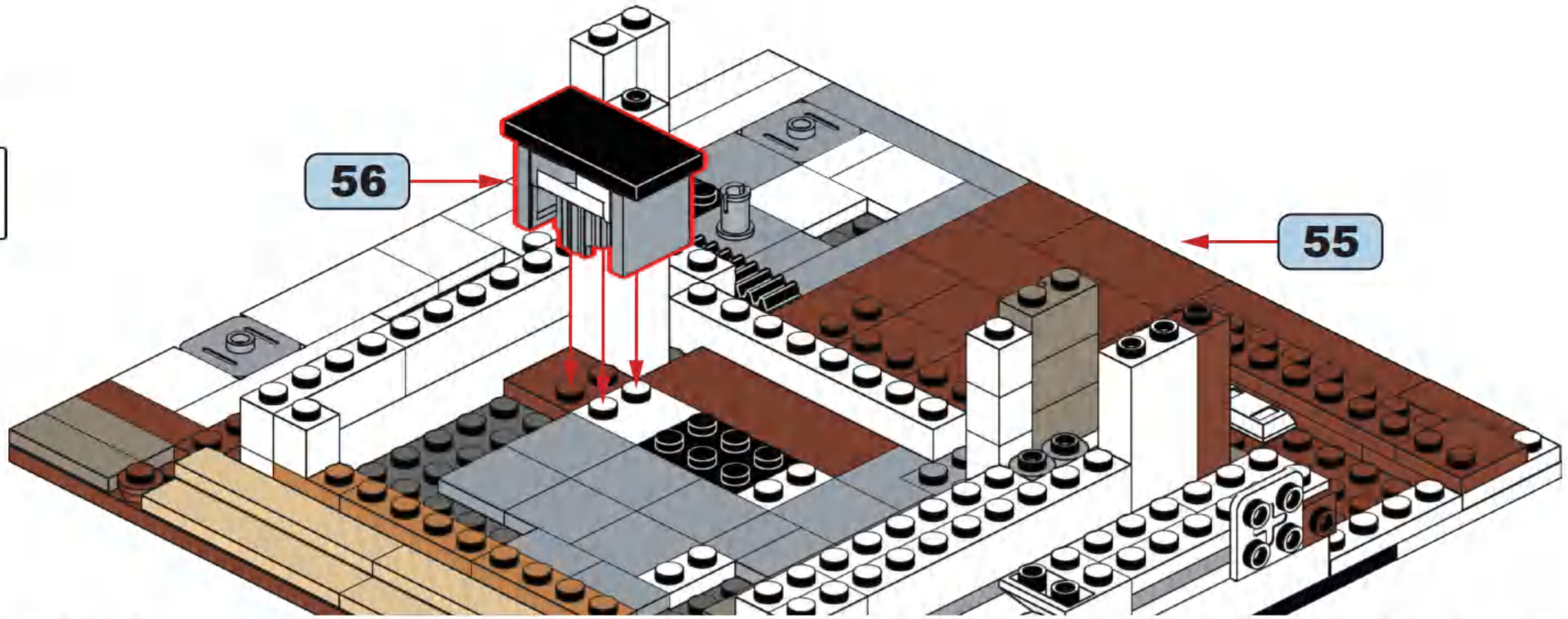

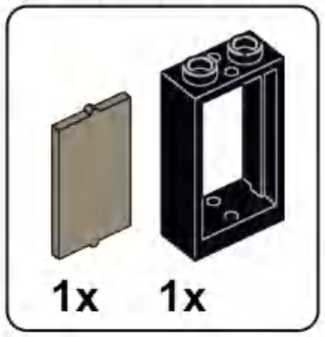

58

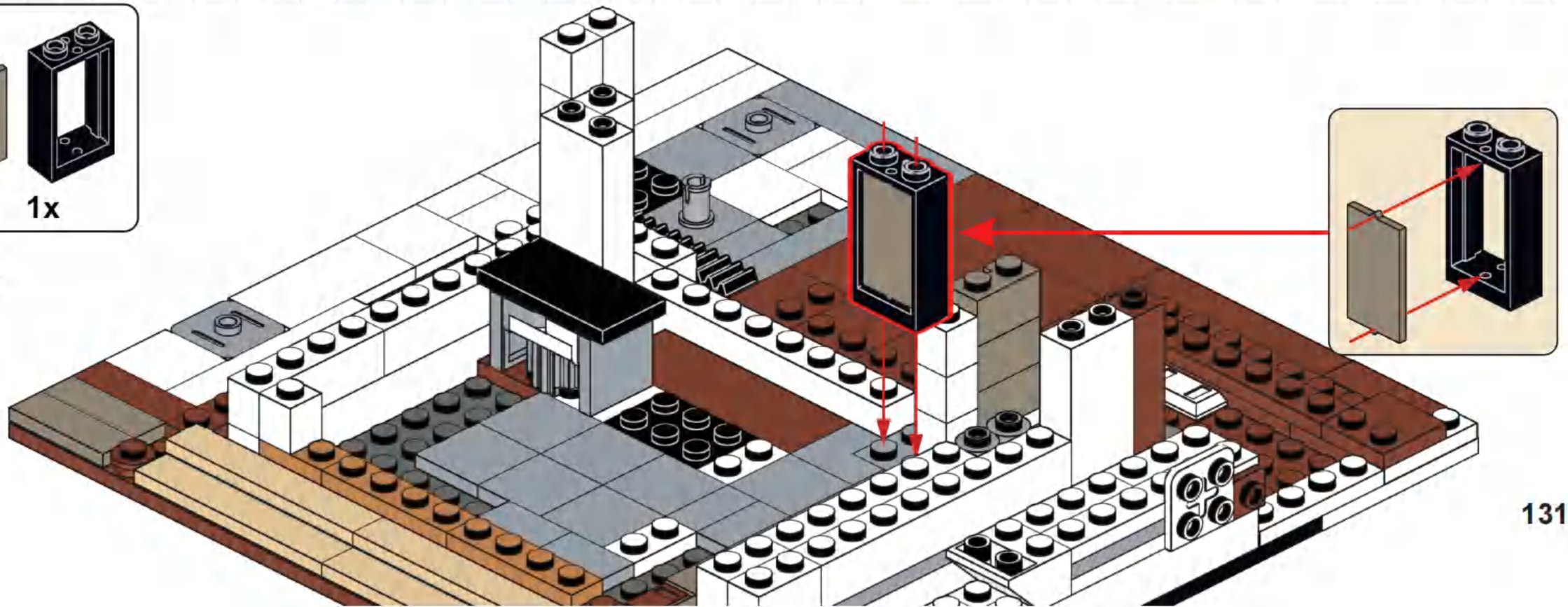

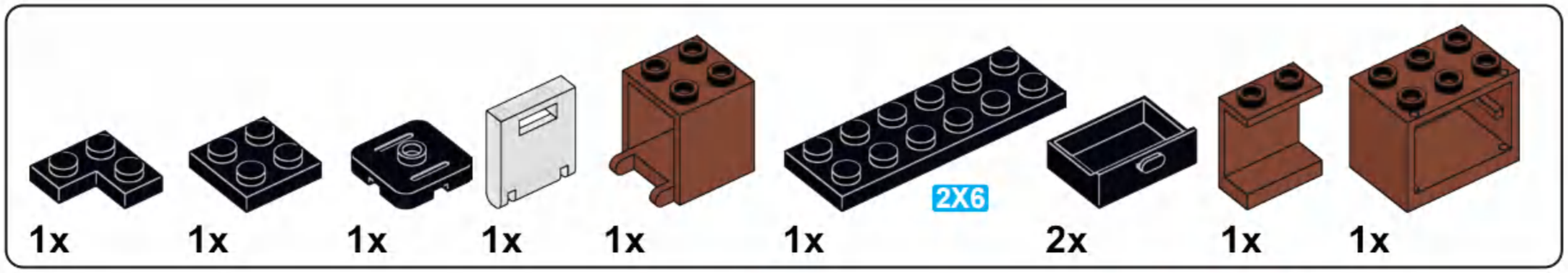

59

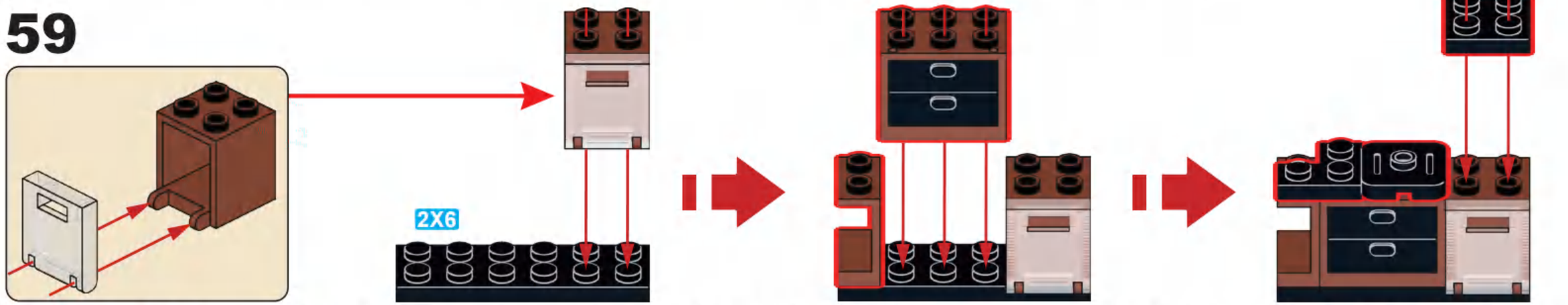

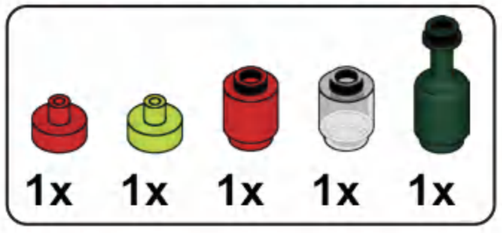

60

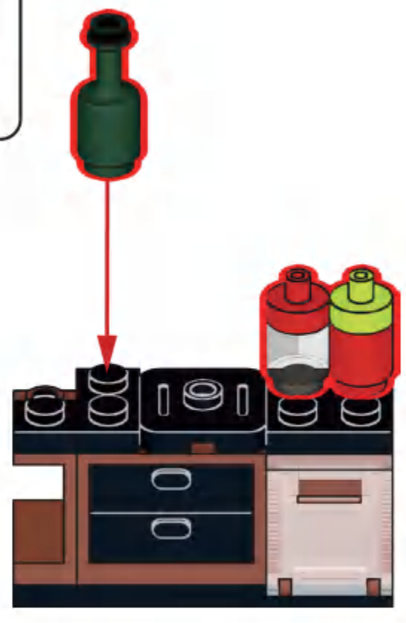

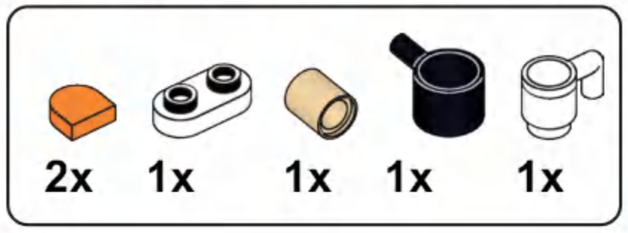

61

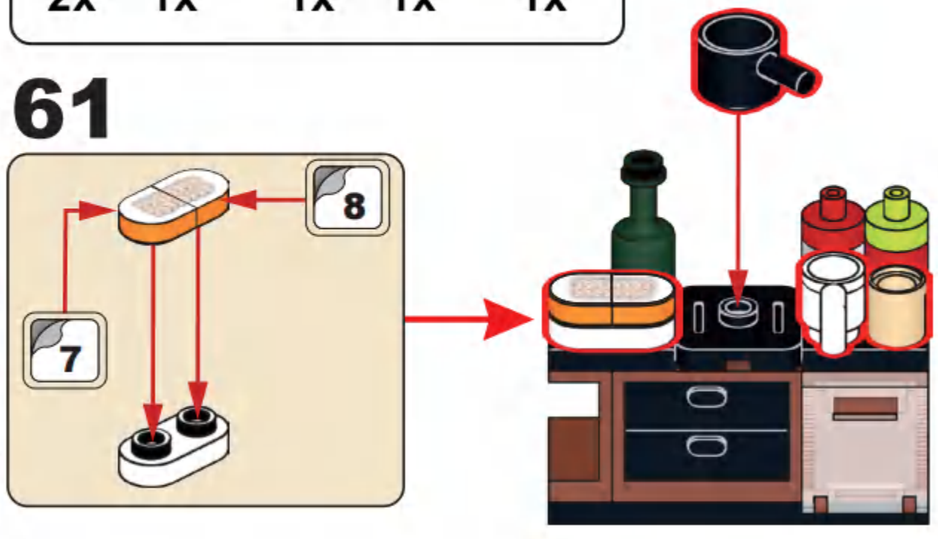

62

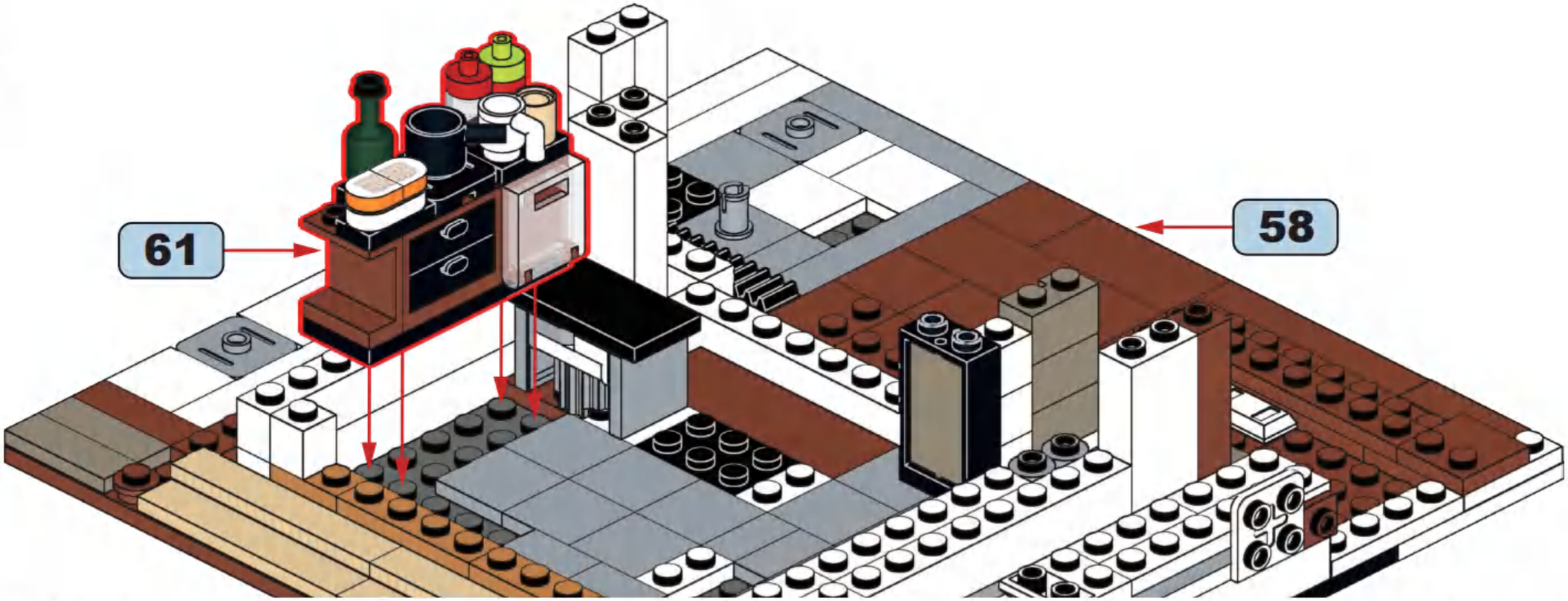

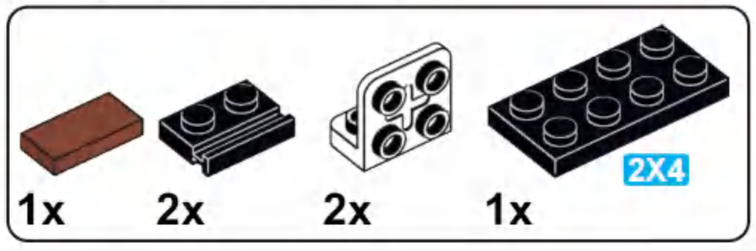

63

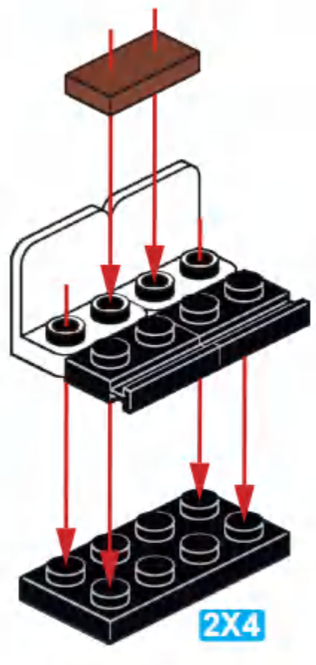

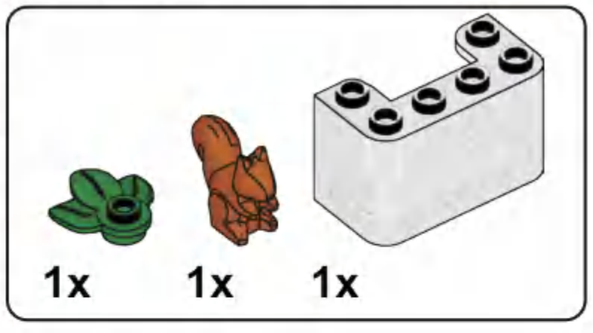

64

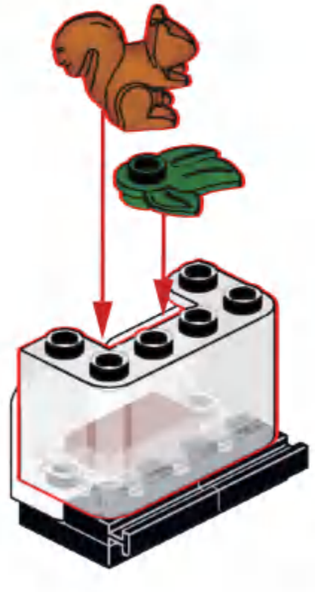

2x

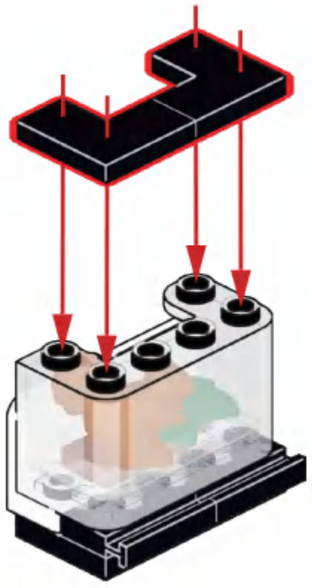

65

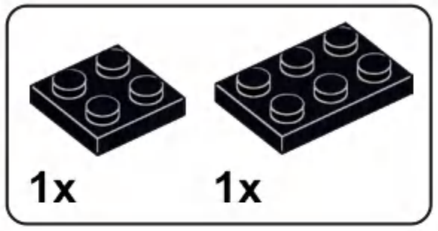

66

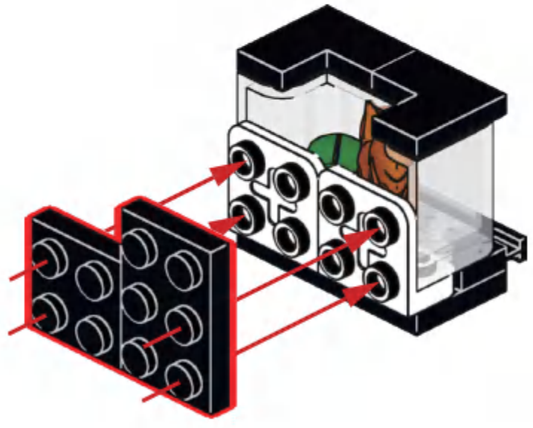

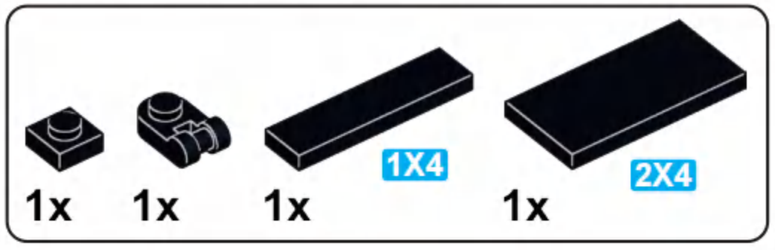

67

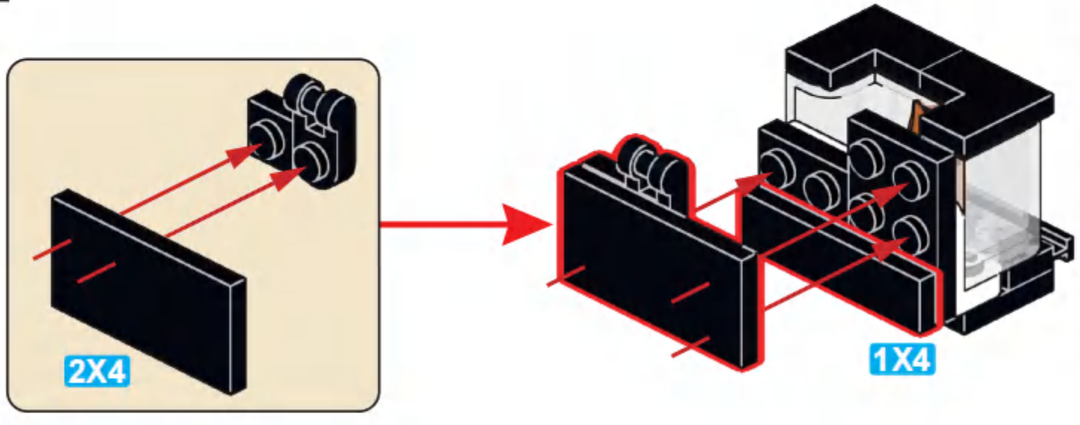

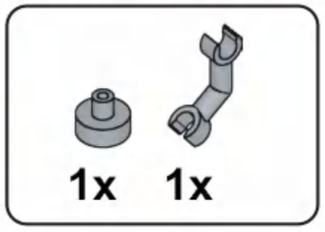

68

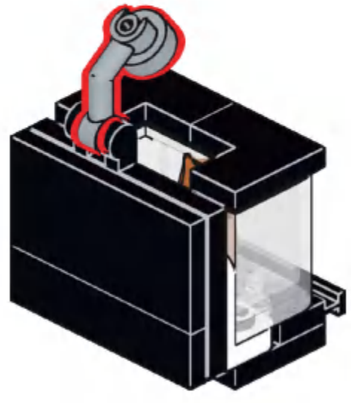

69

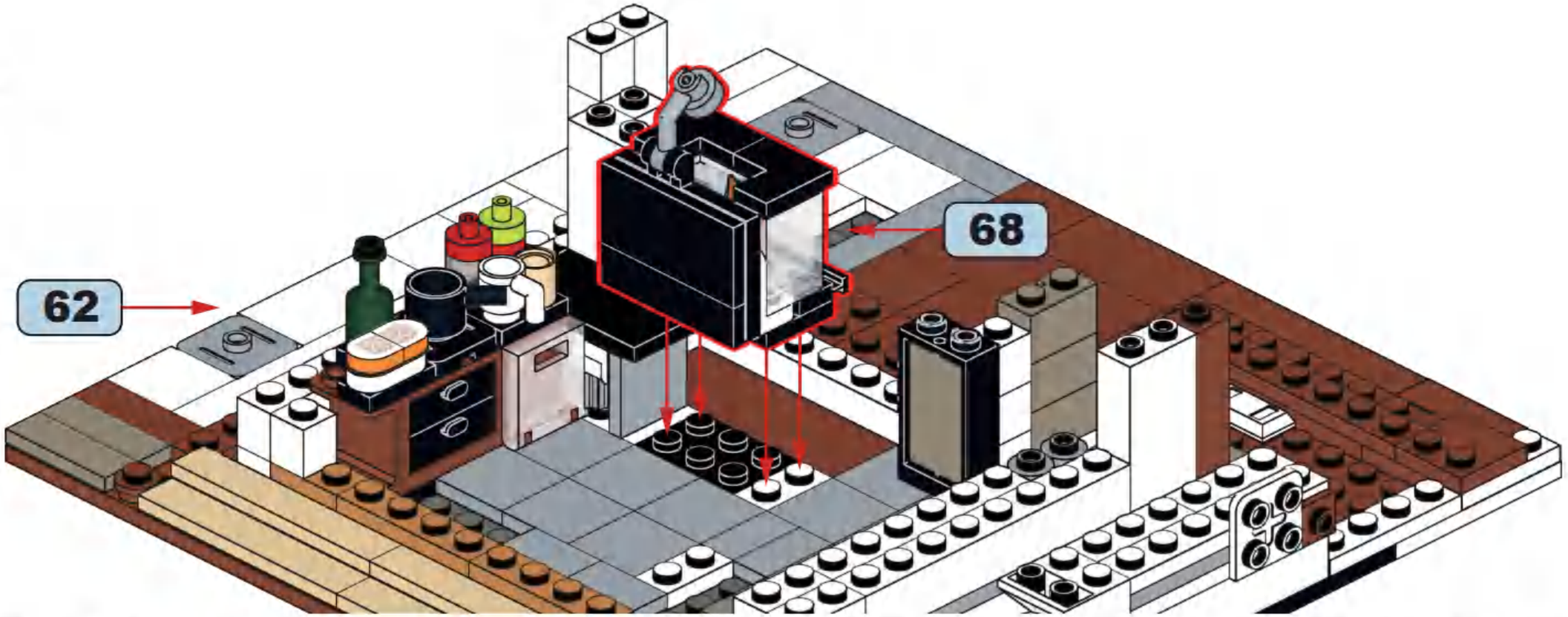

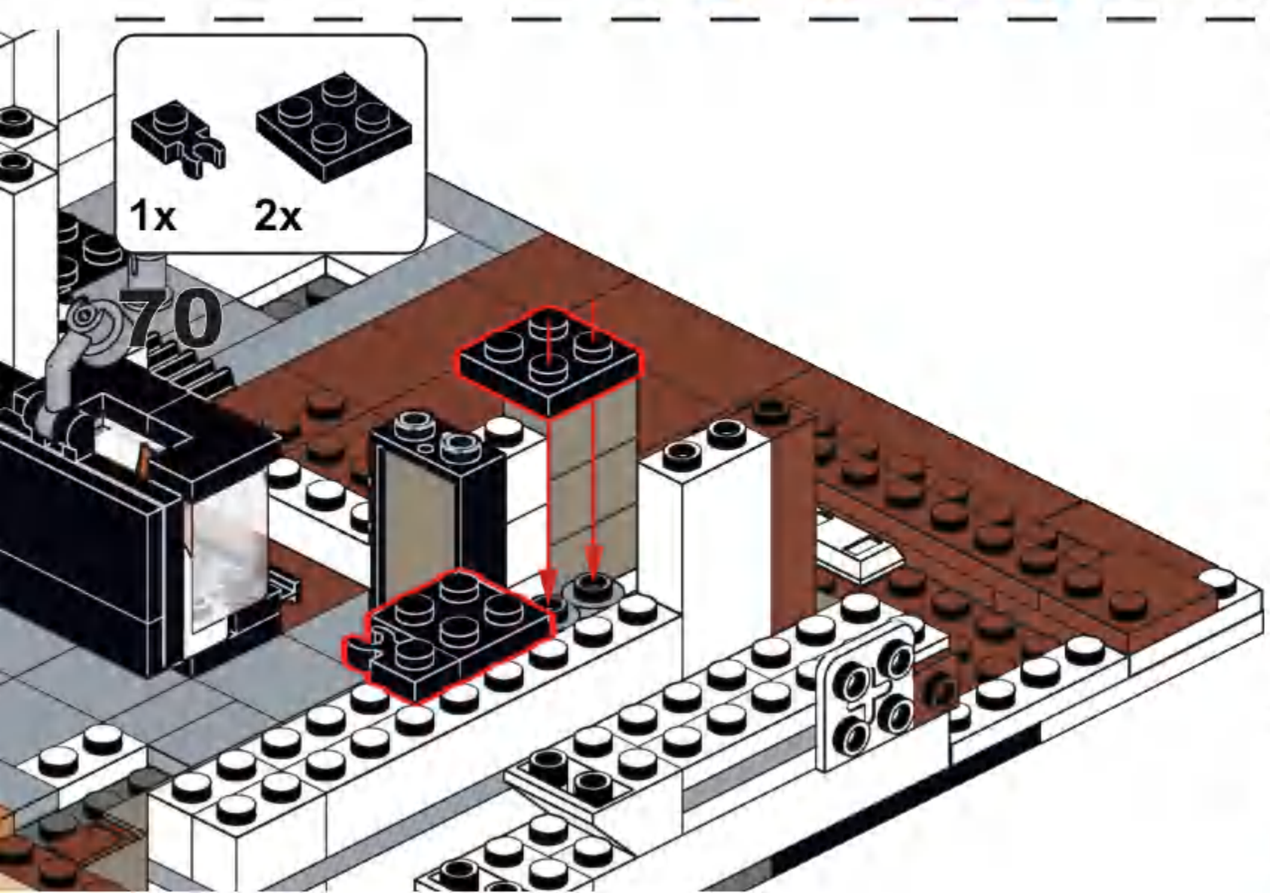

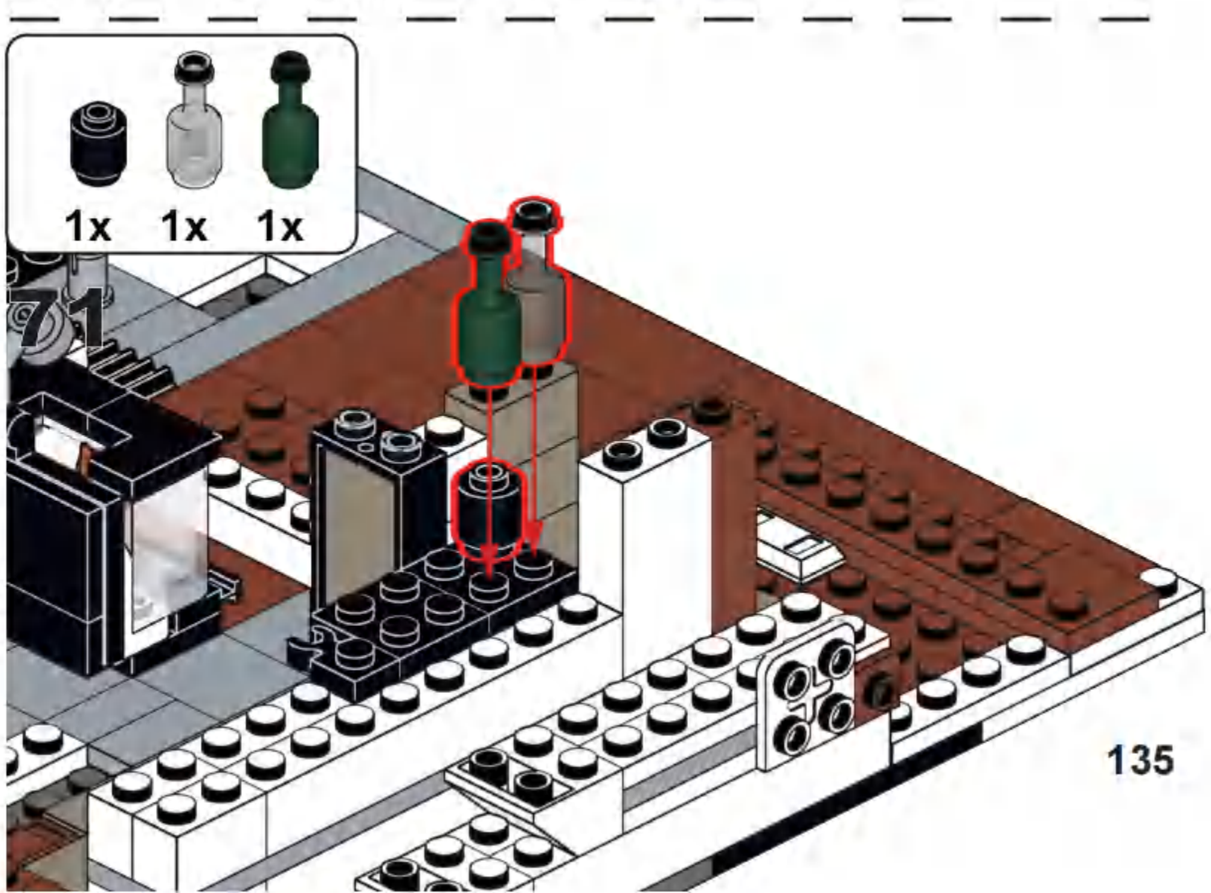

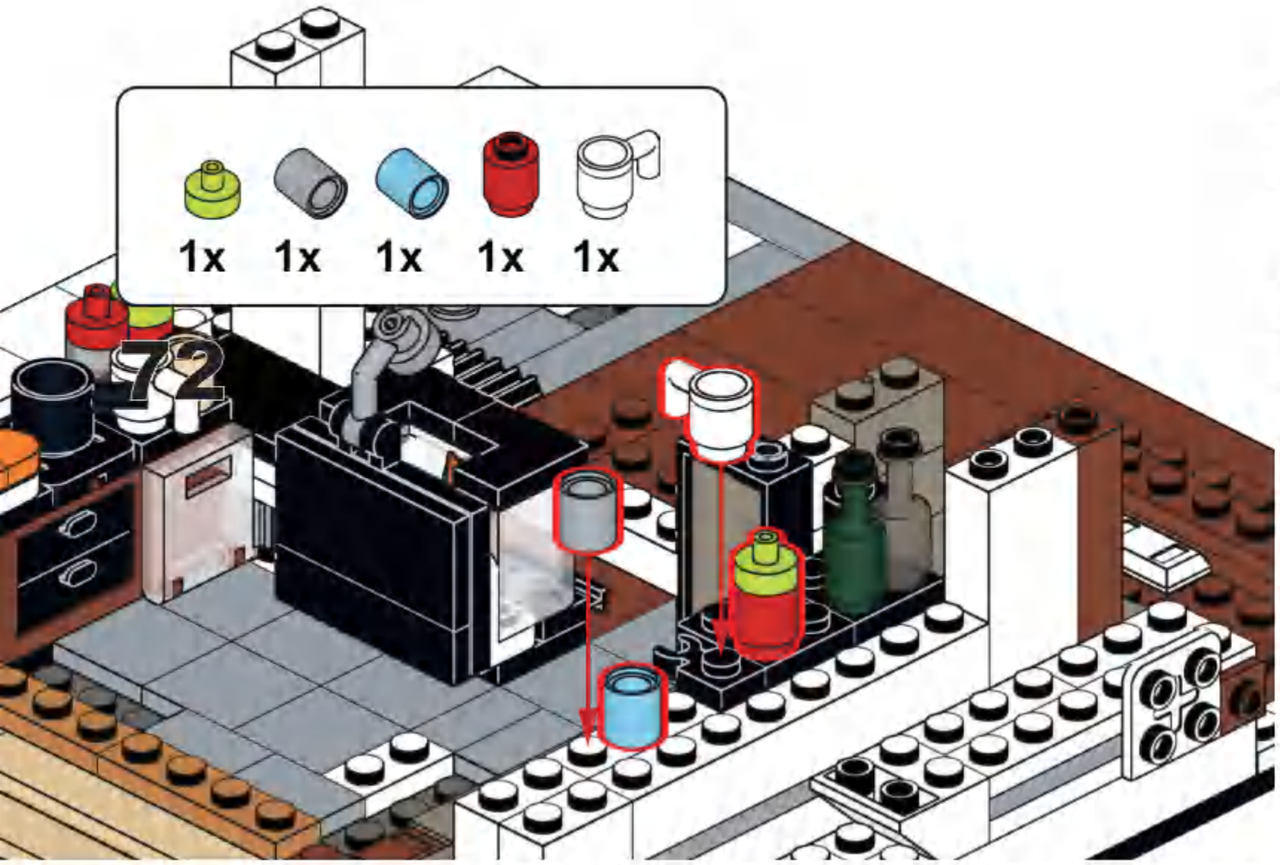

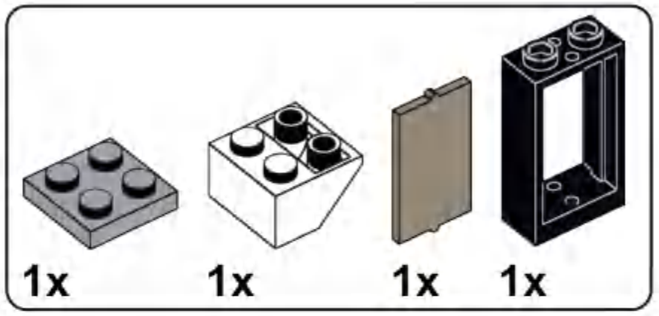

73

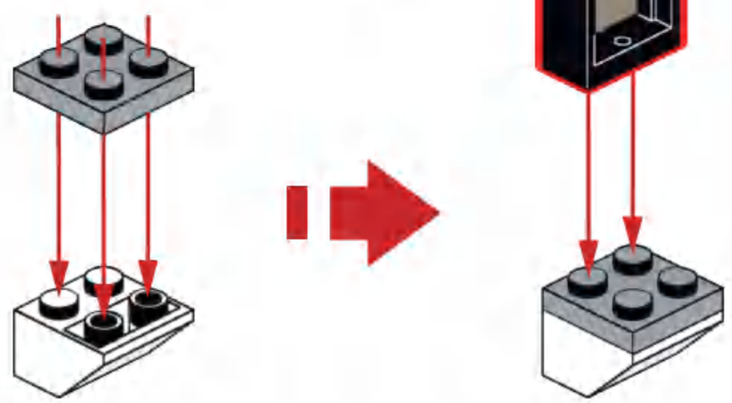

74

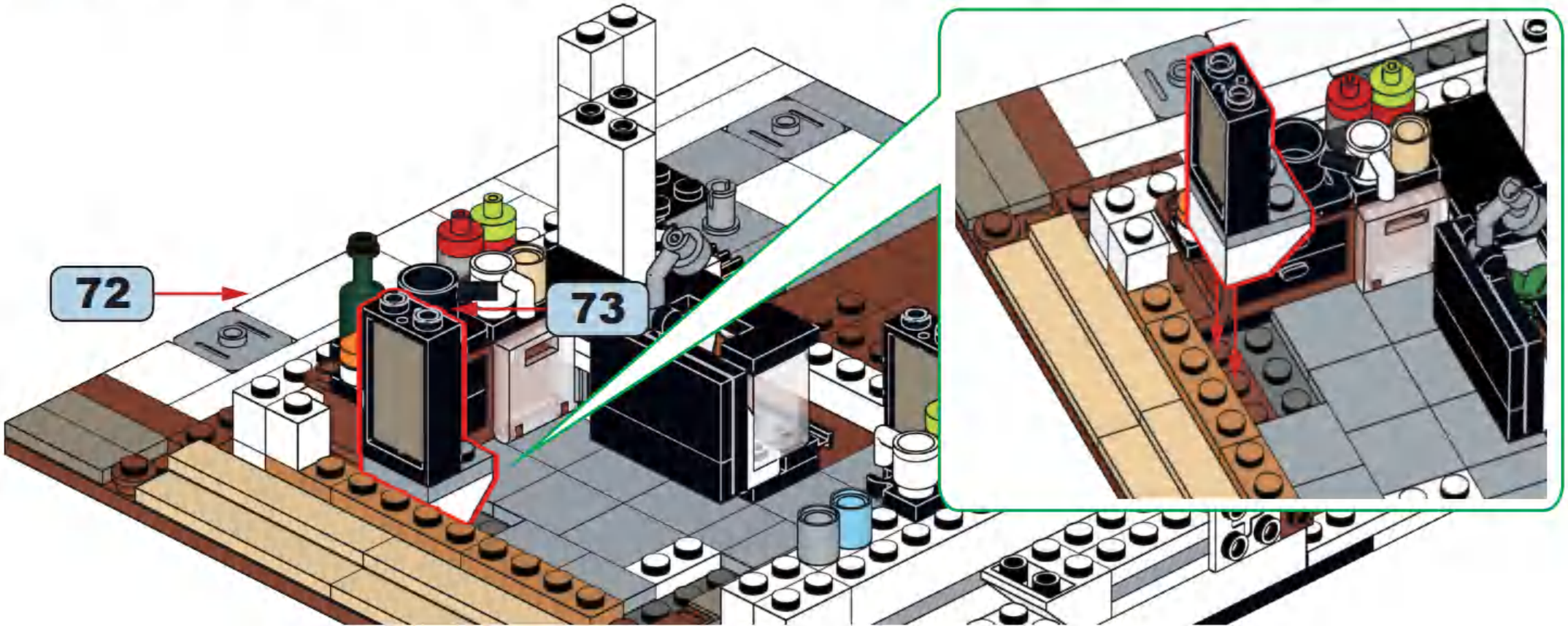

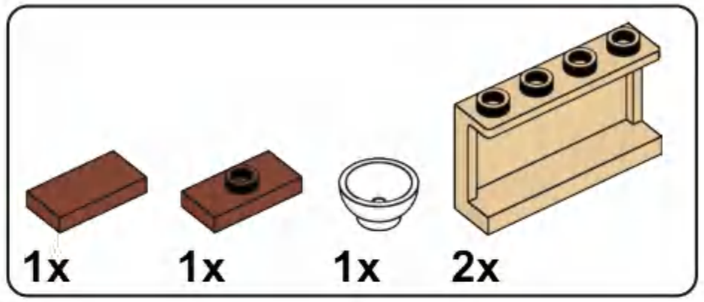

75

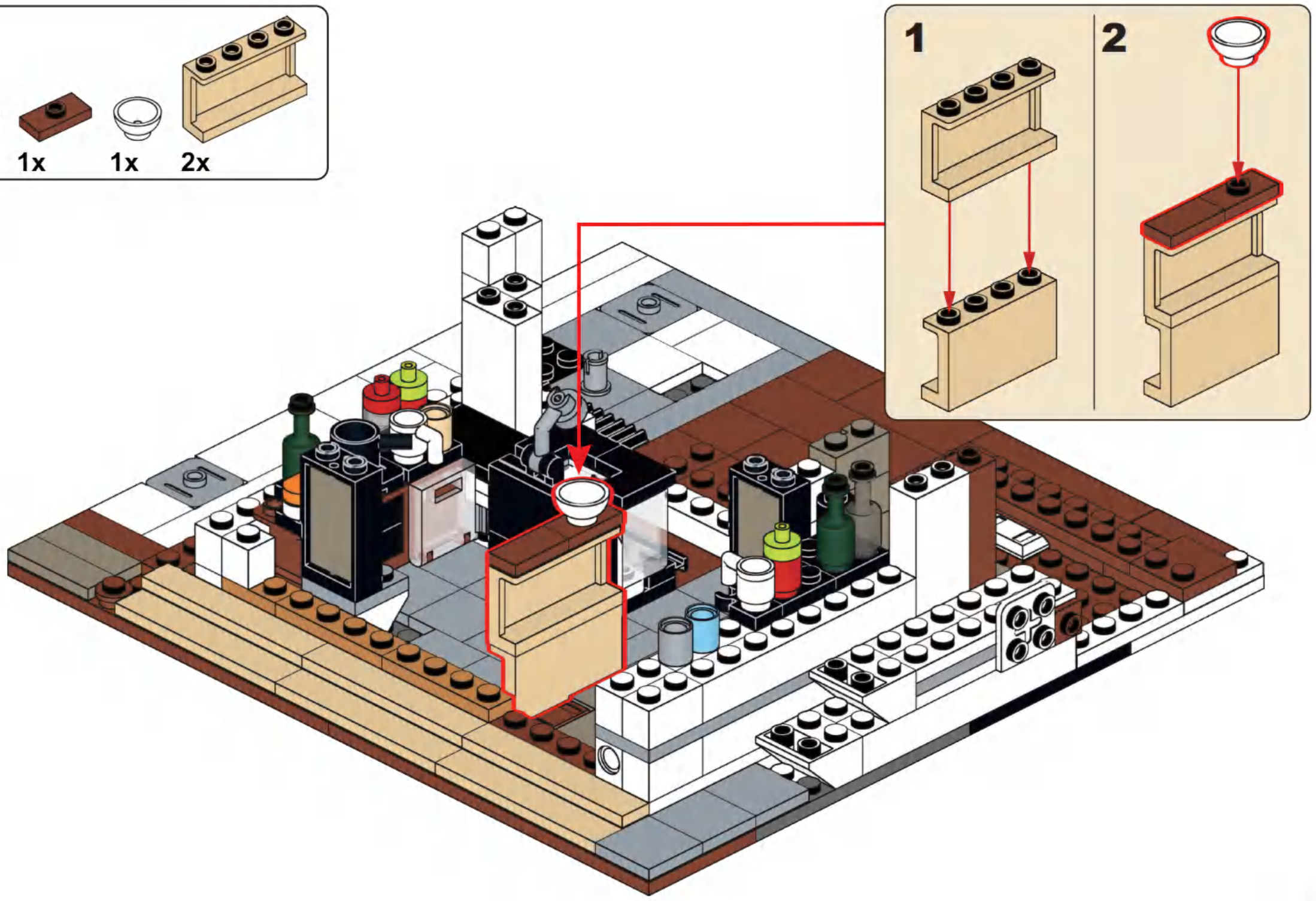

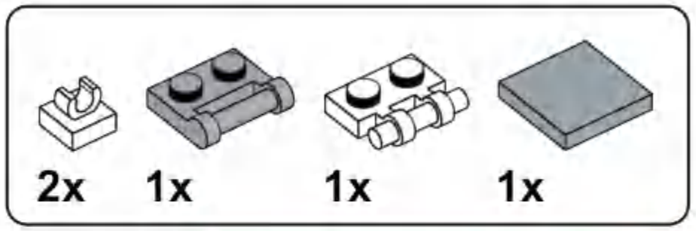

76

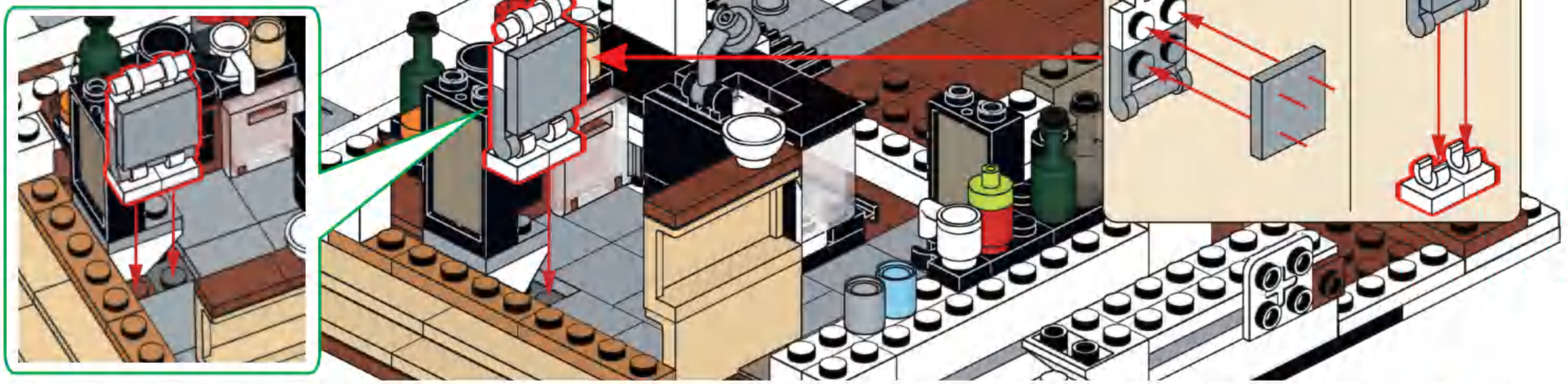

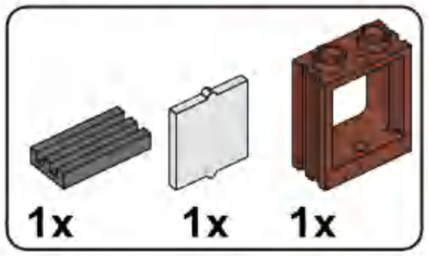

77

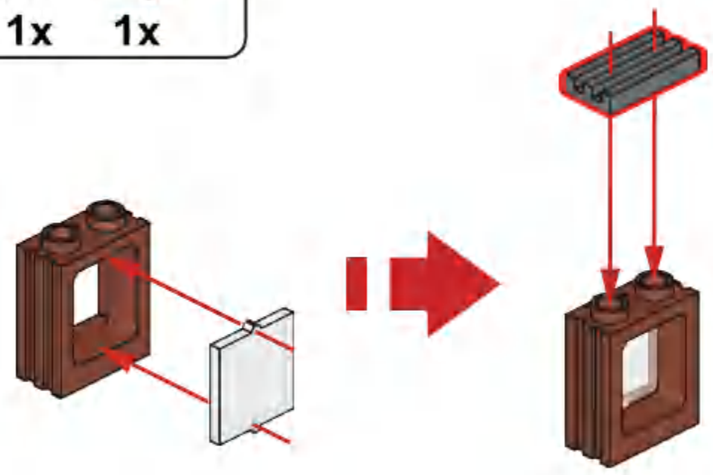

78

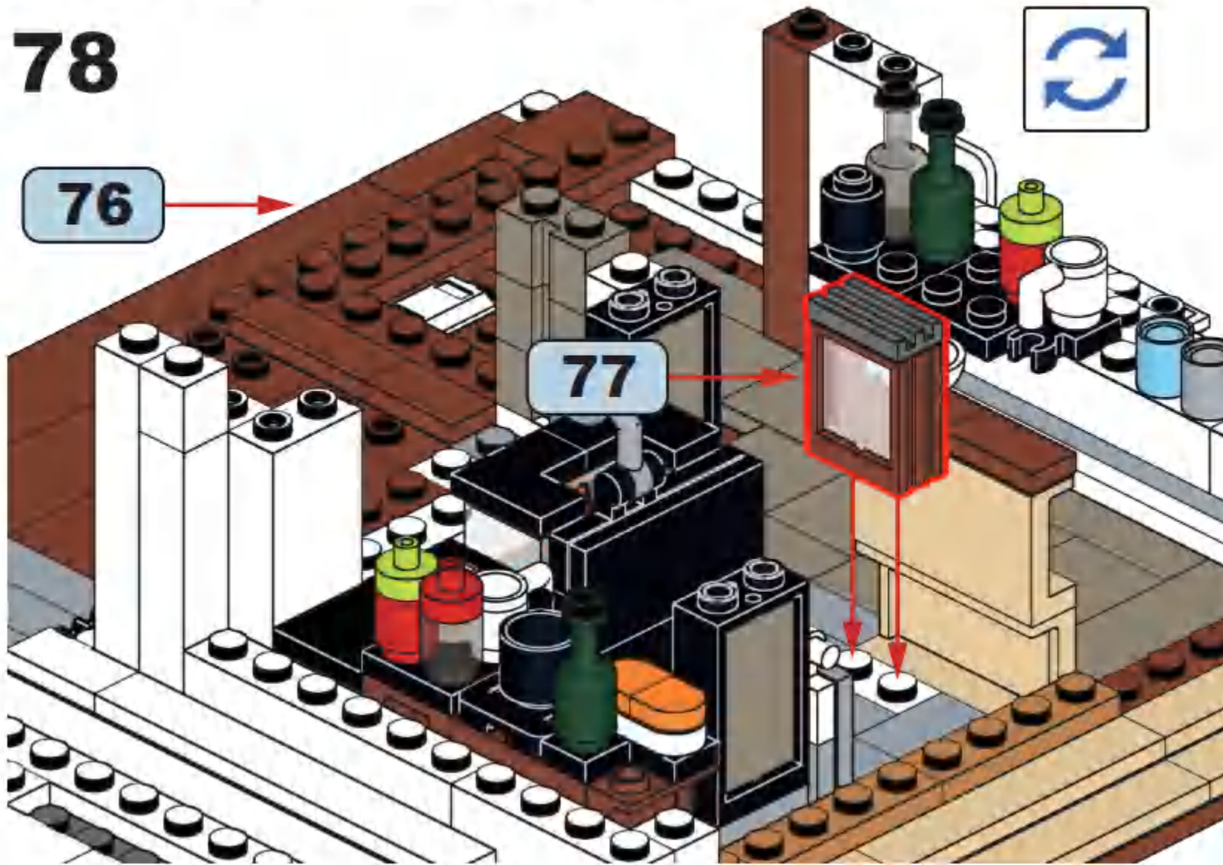

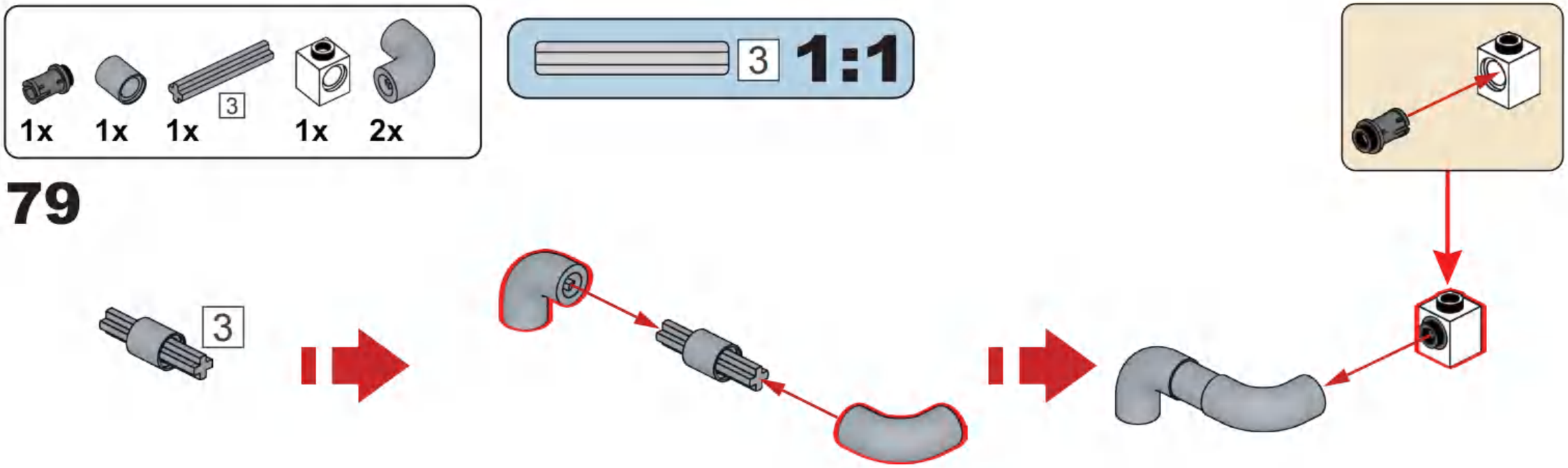
1x
1x
1x
3
1x
2x
3
1:1
79
3

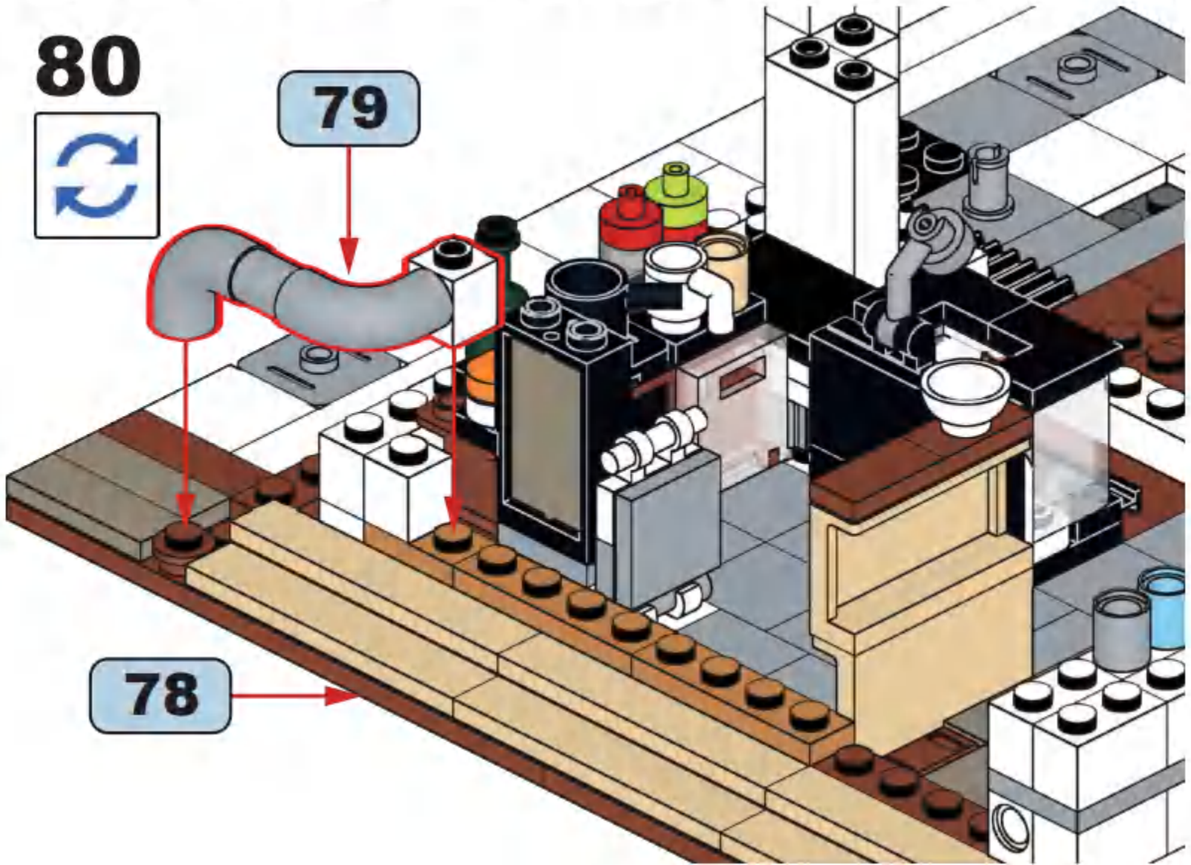
80
79
78

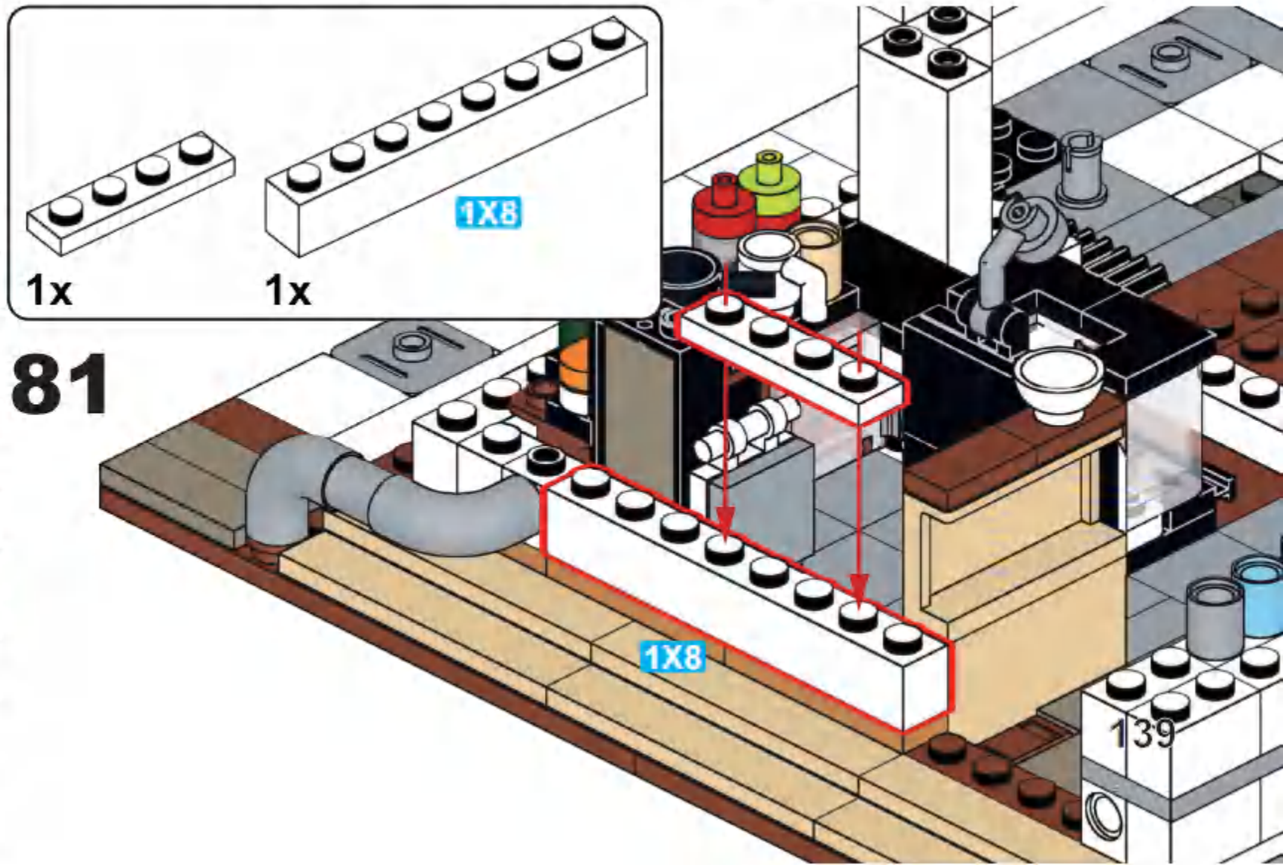
1x
1x
1X8
81
1X8

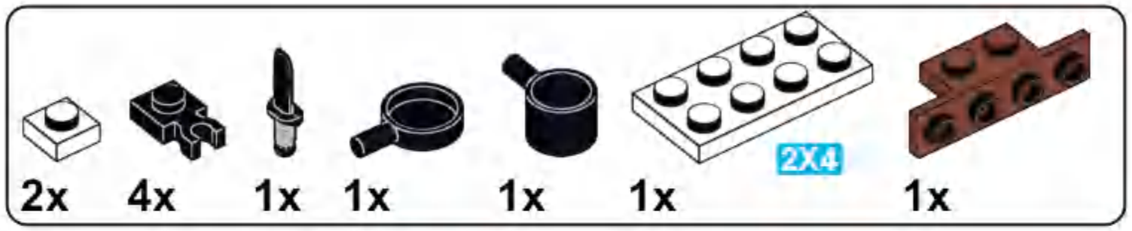

82

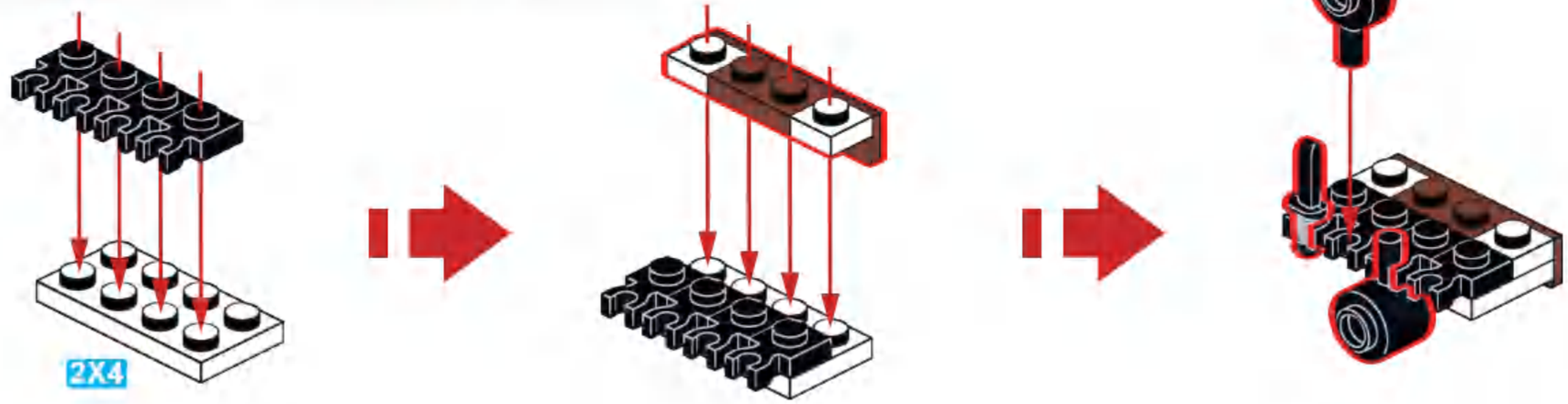

83

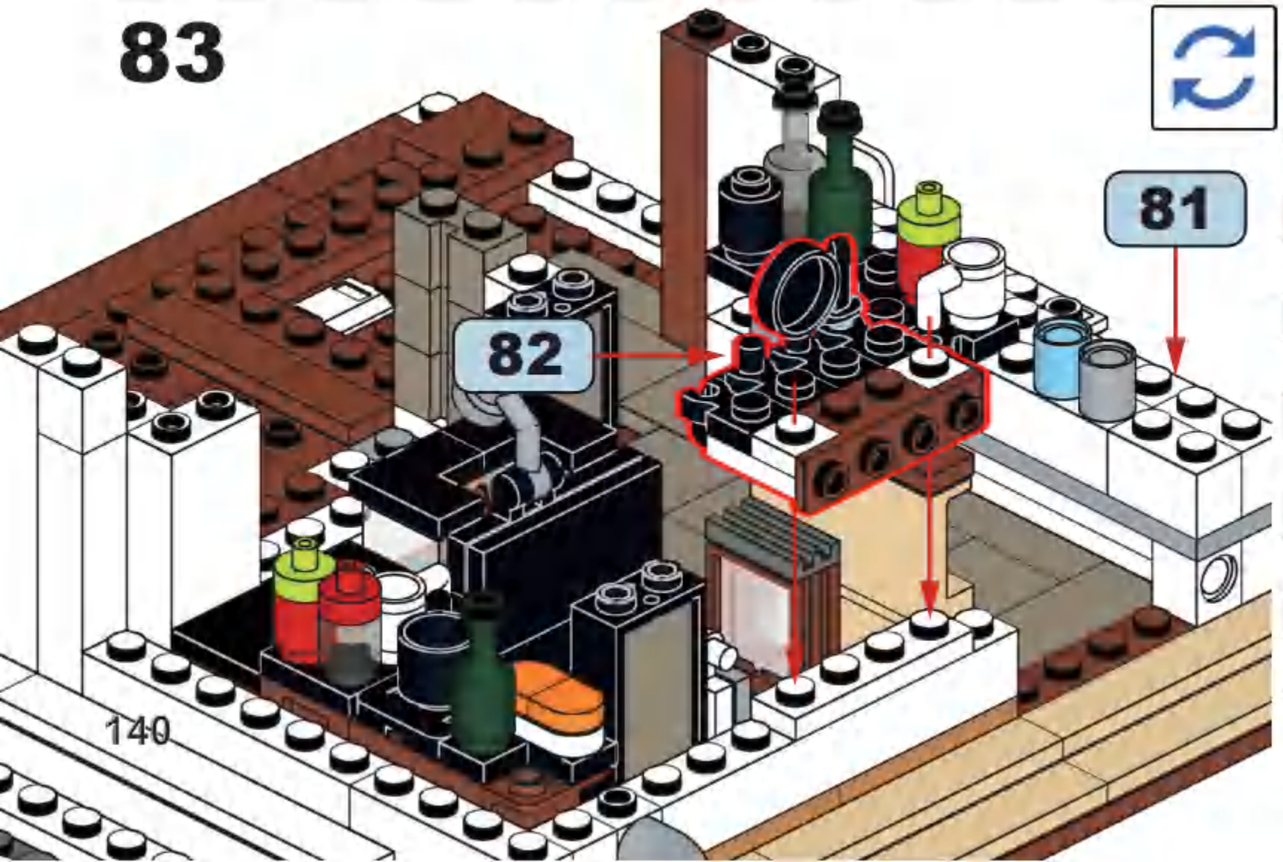

84

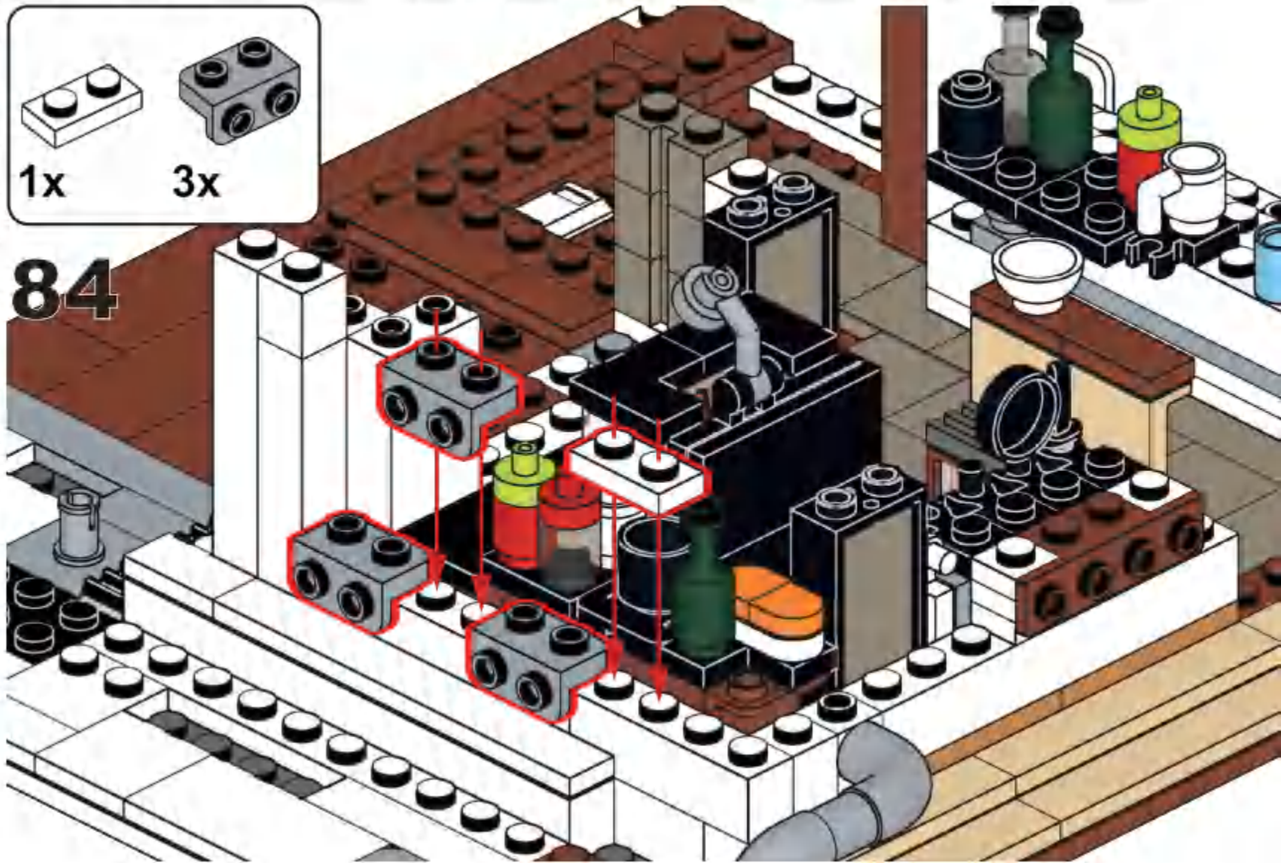

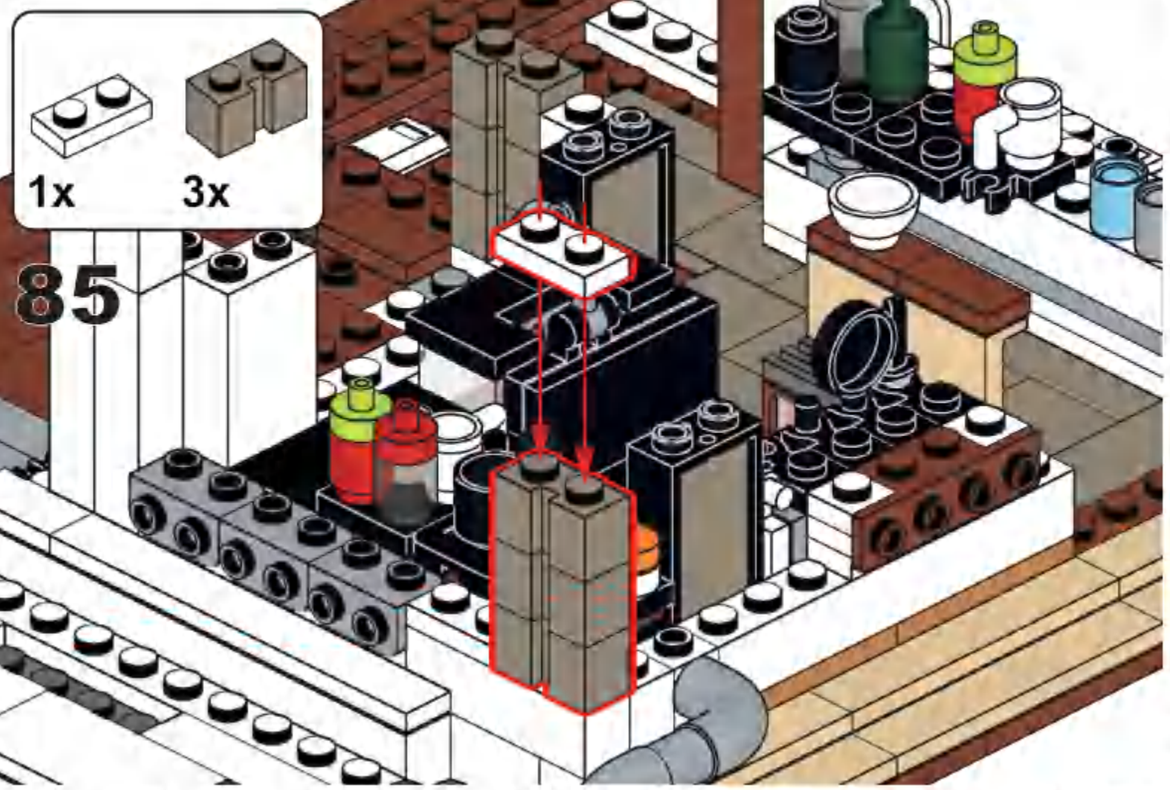

85

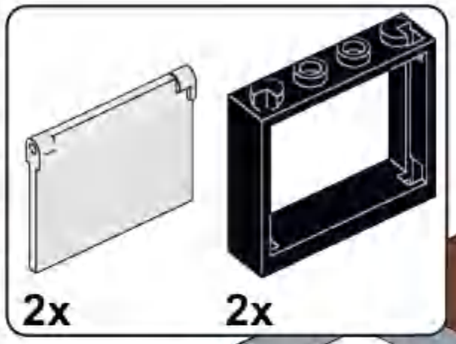

86

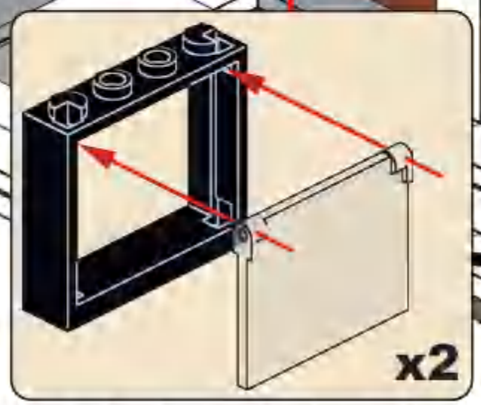

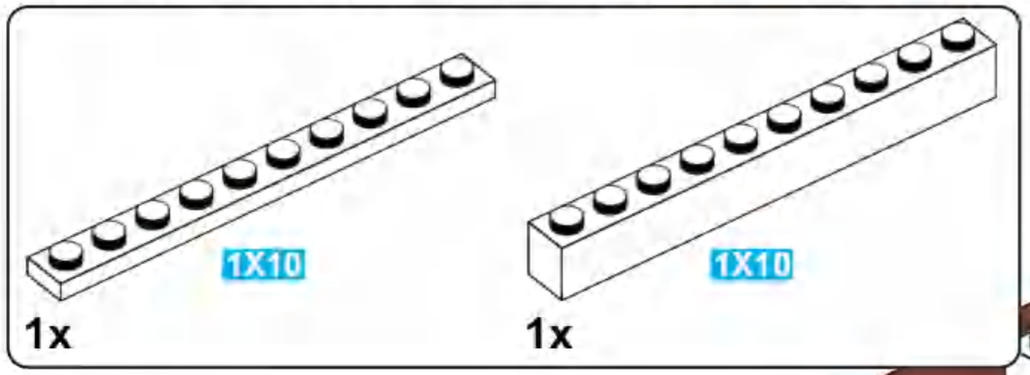

87

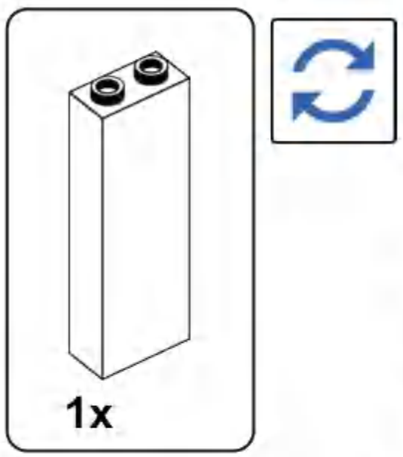

88

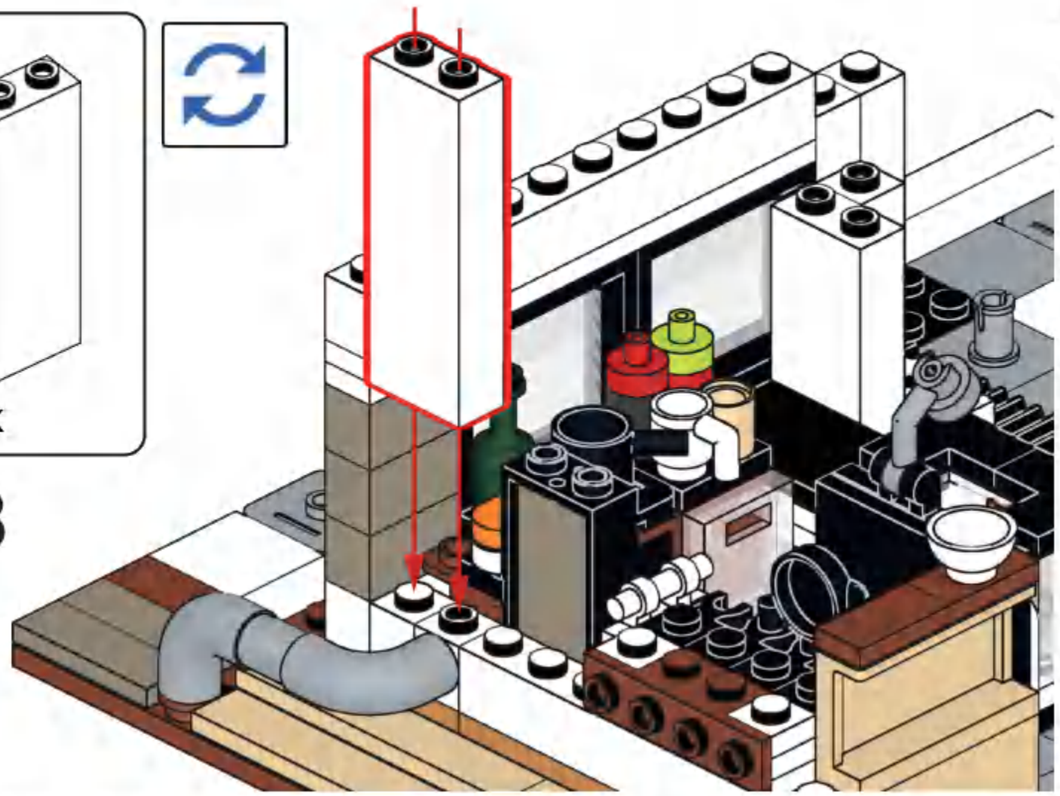

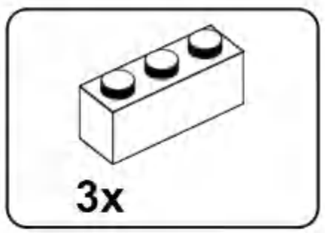

89

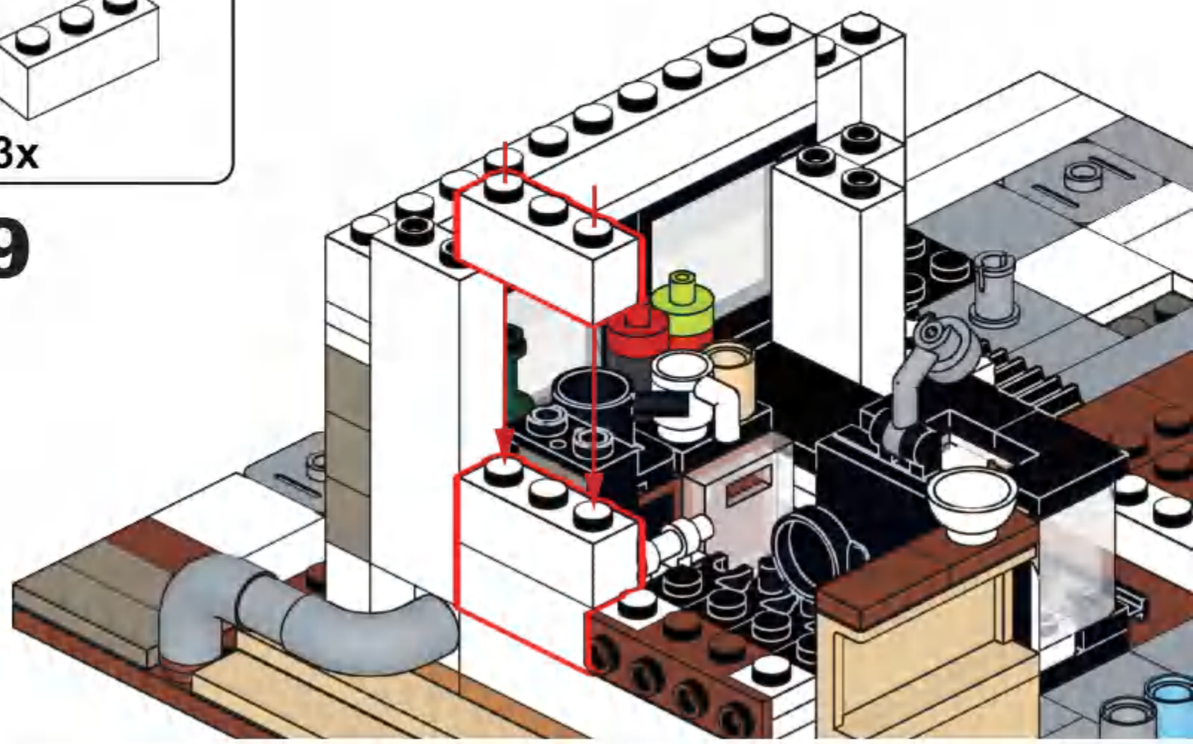

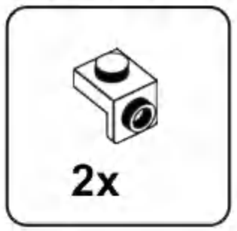

90

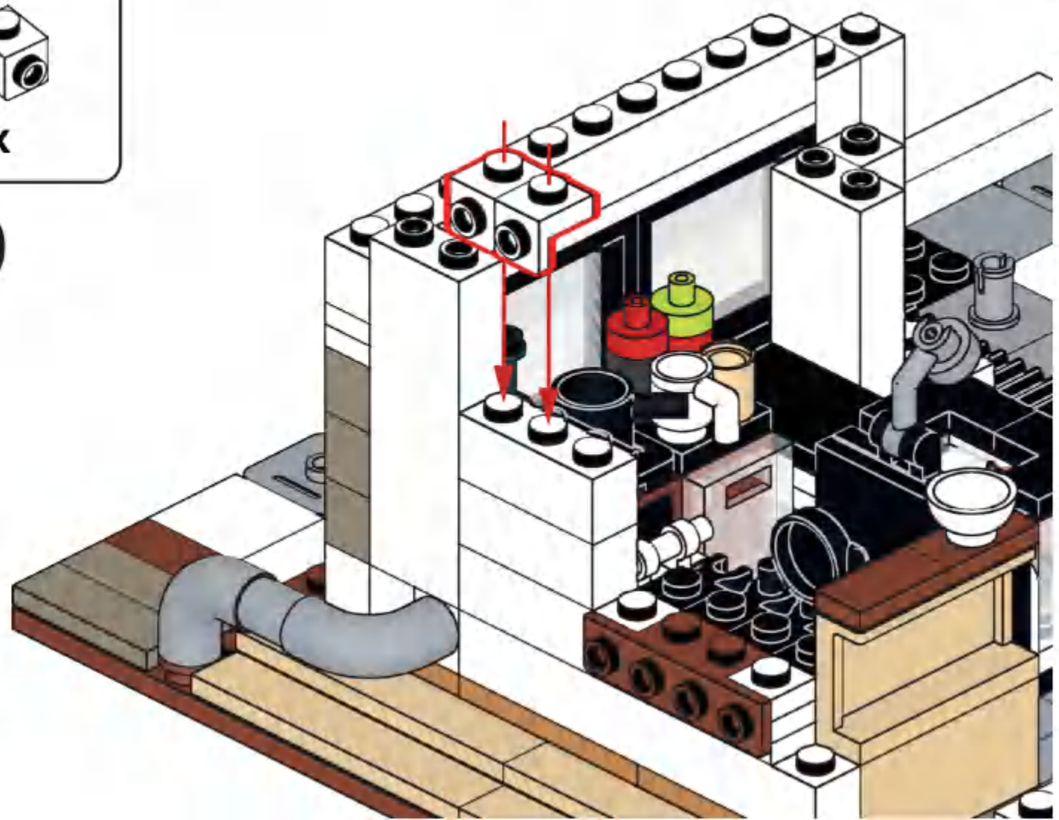

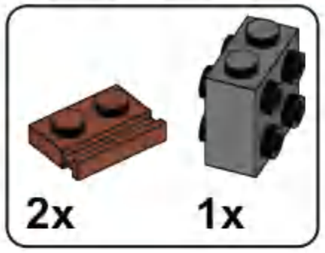

91

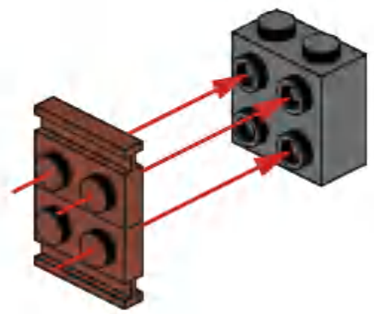

1x

92

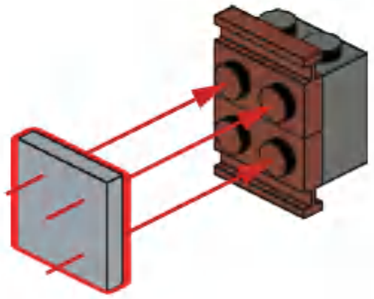

1x

93

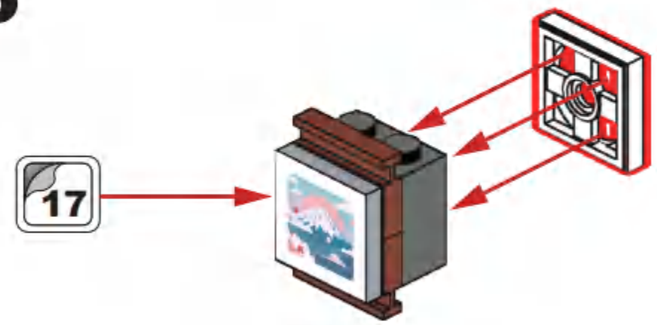

94

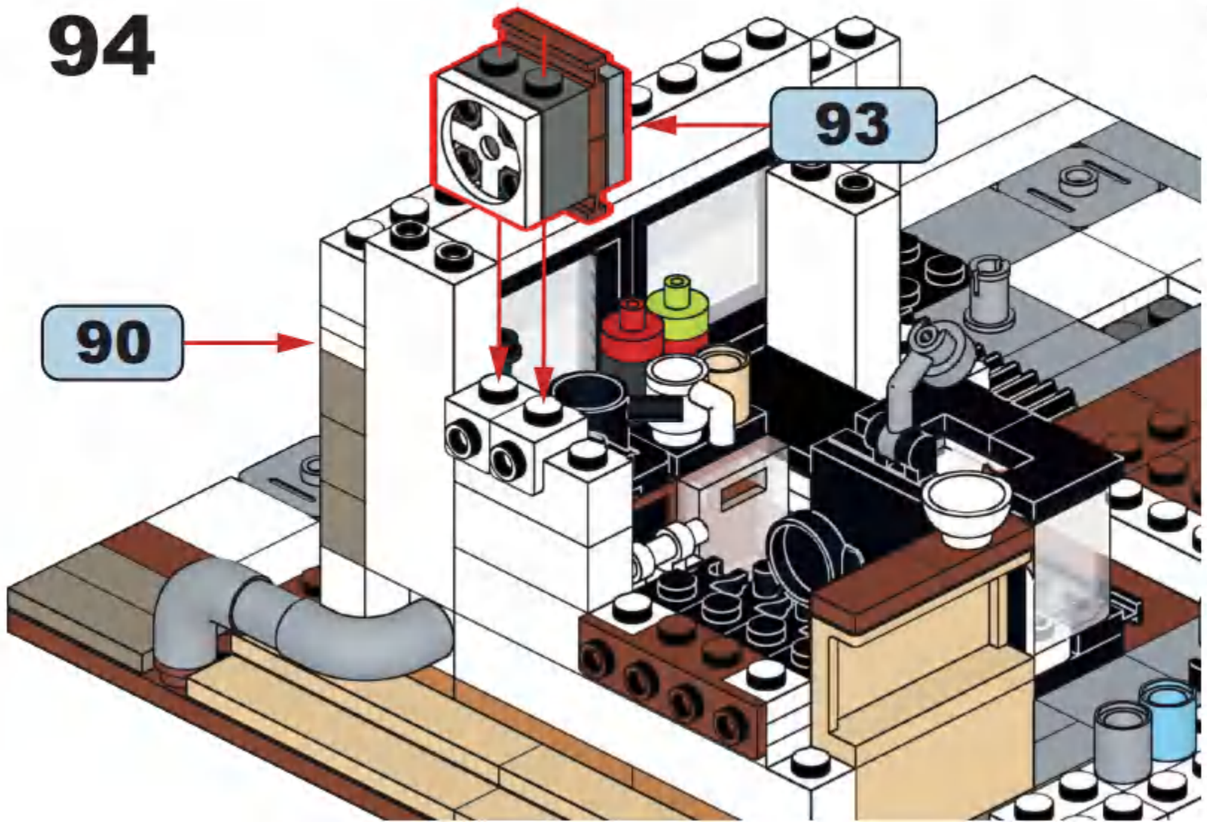

2x

95

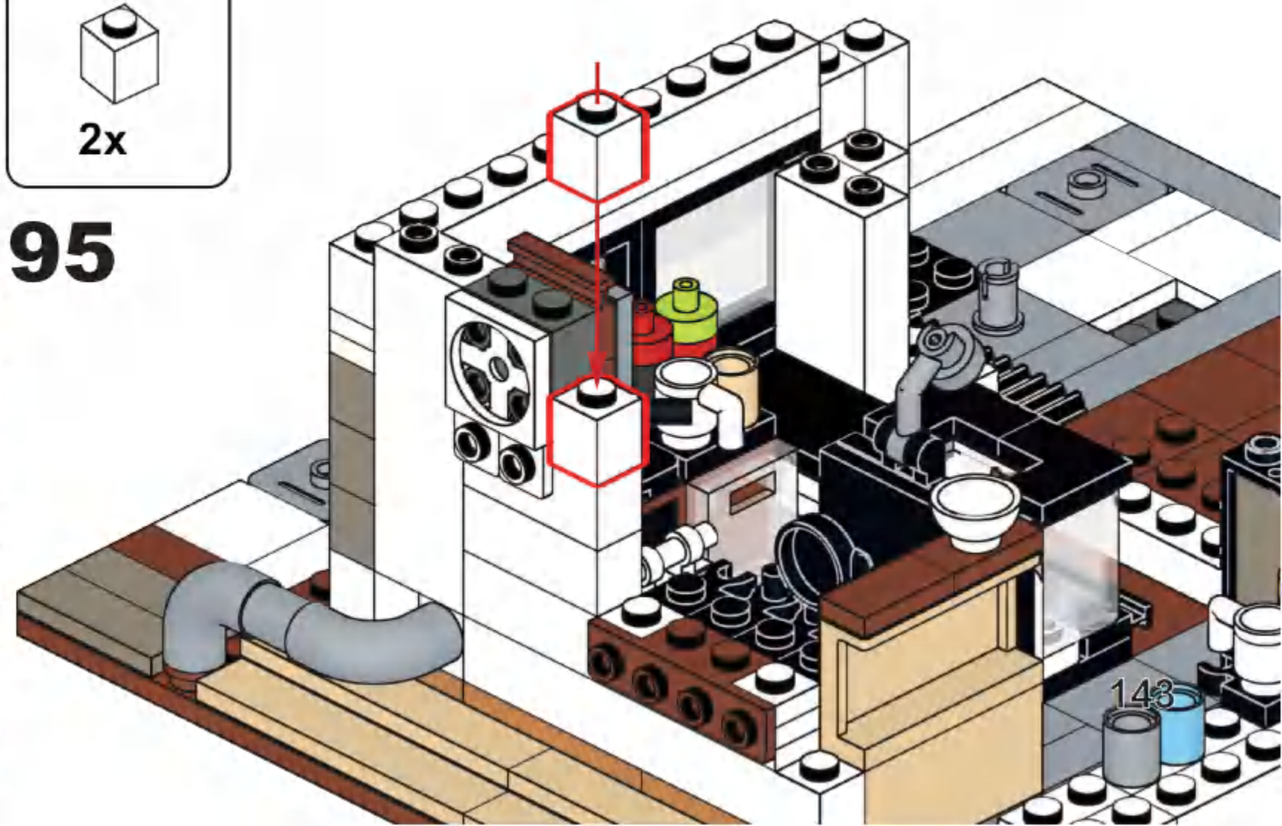

96

97

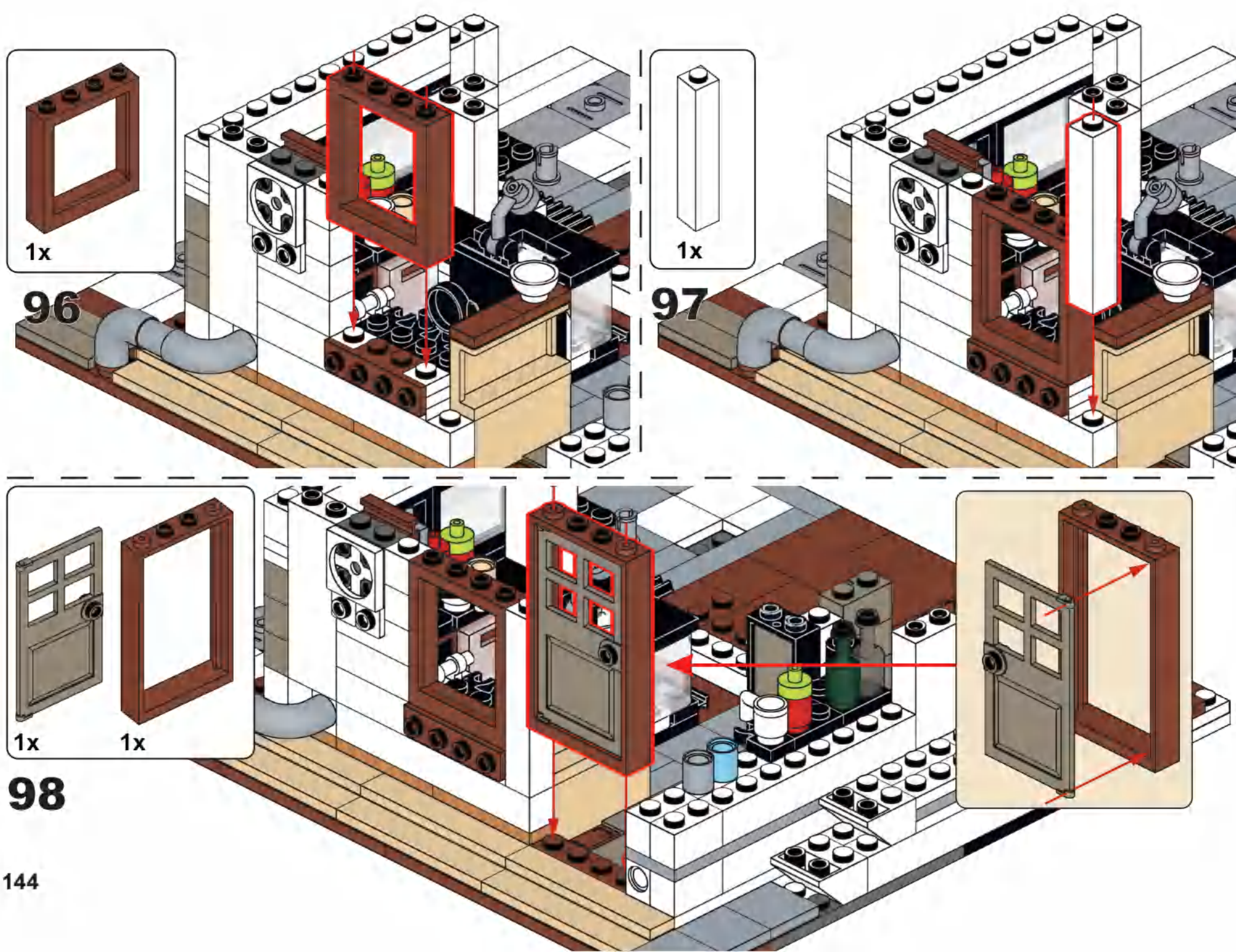

98

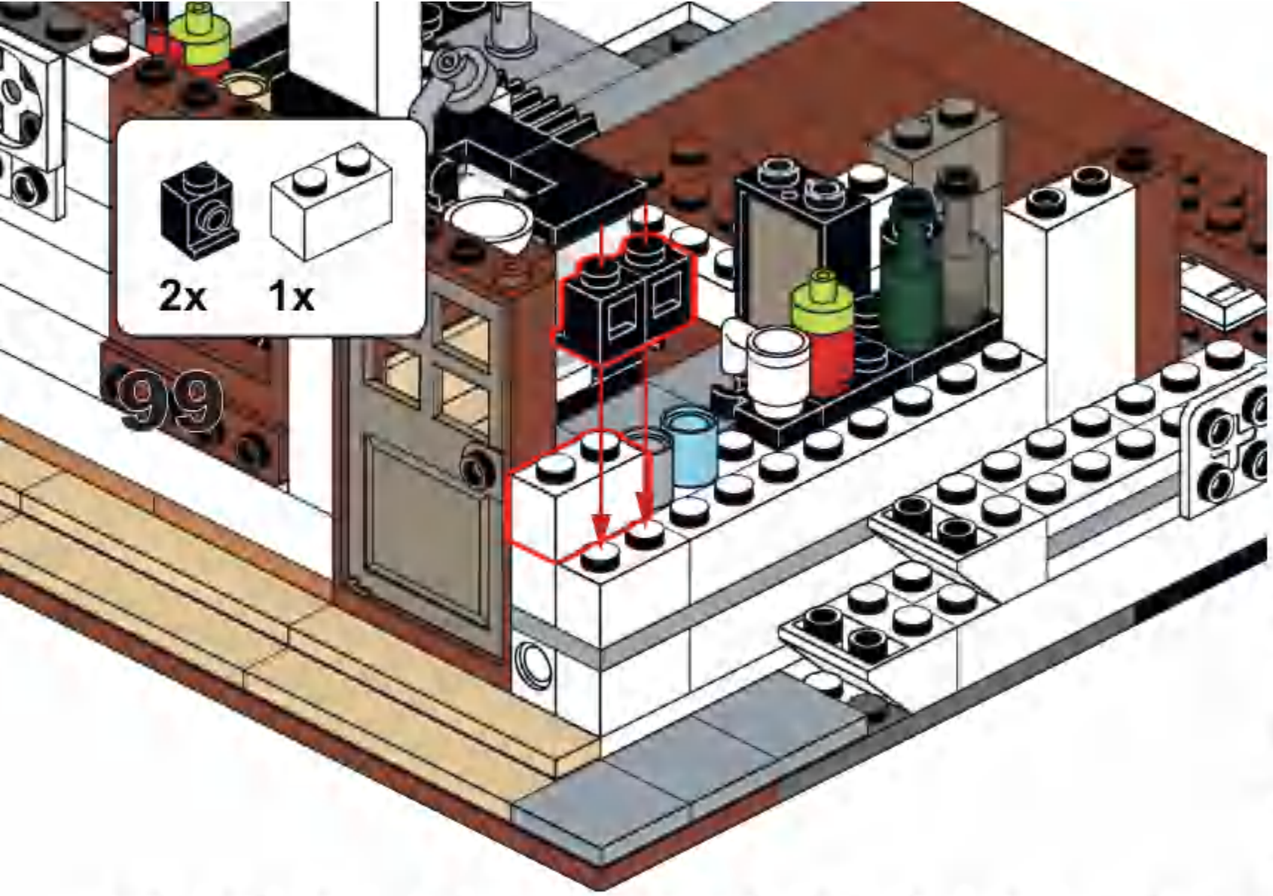
2x
1x
99

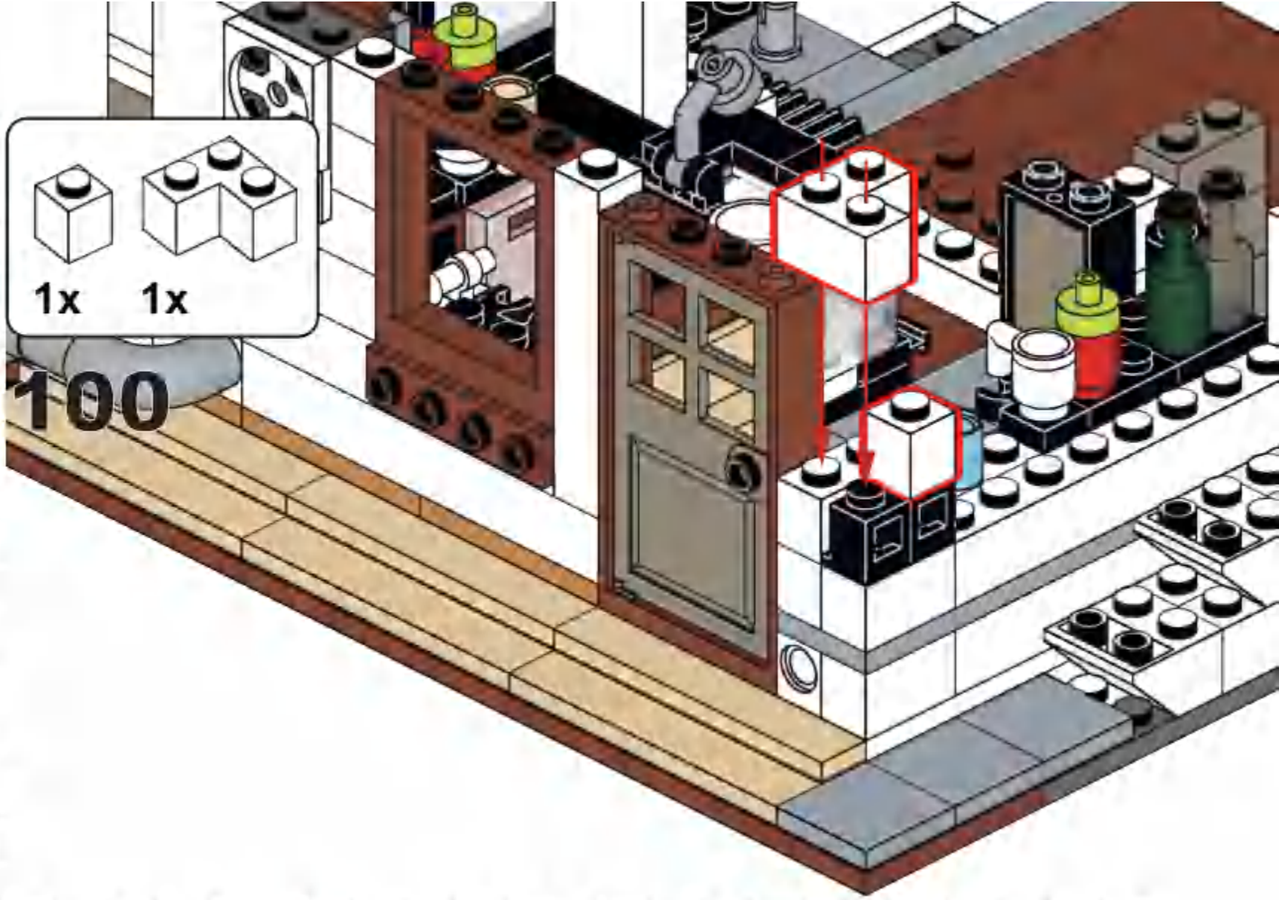
1x
1x
100

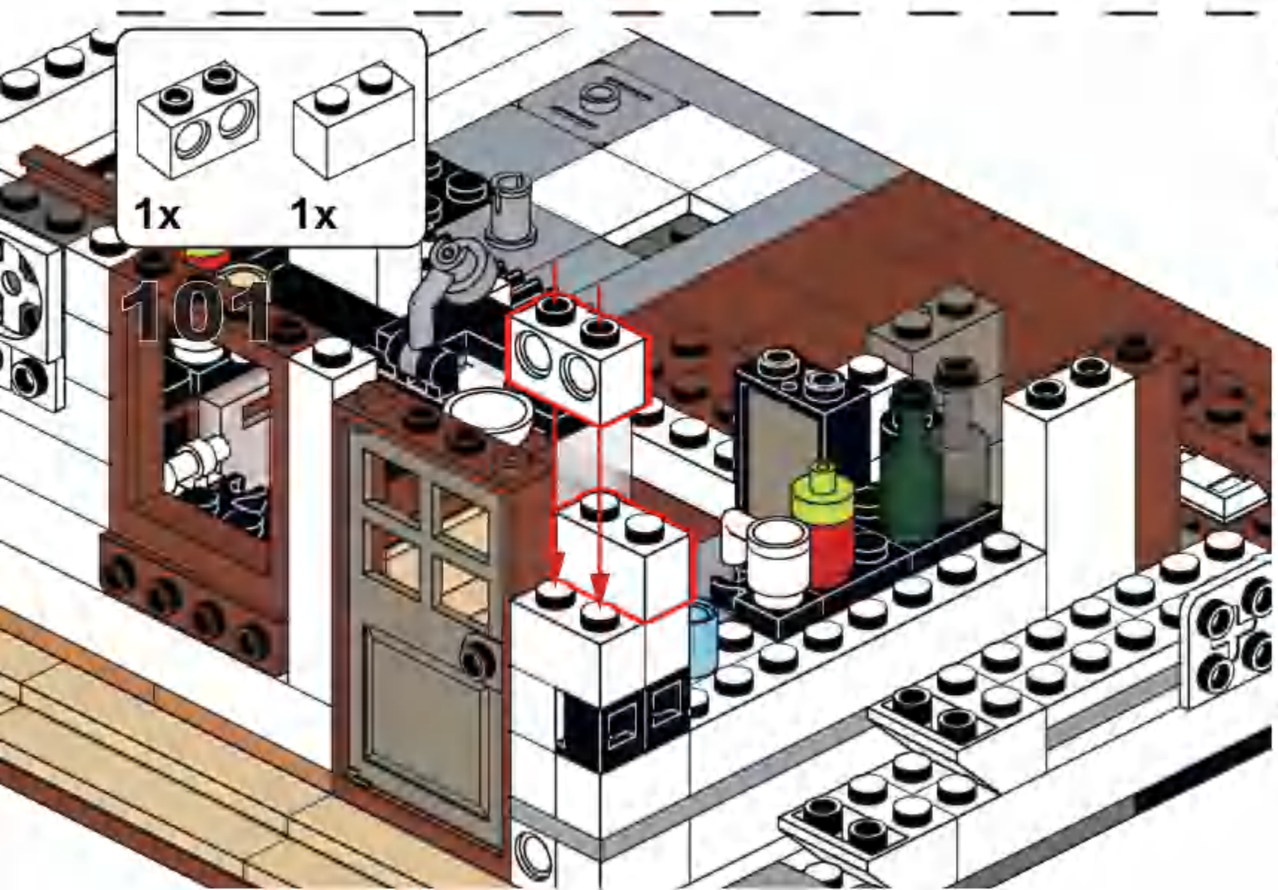
1x
1x
101

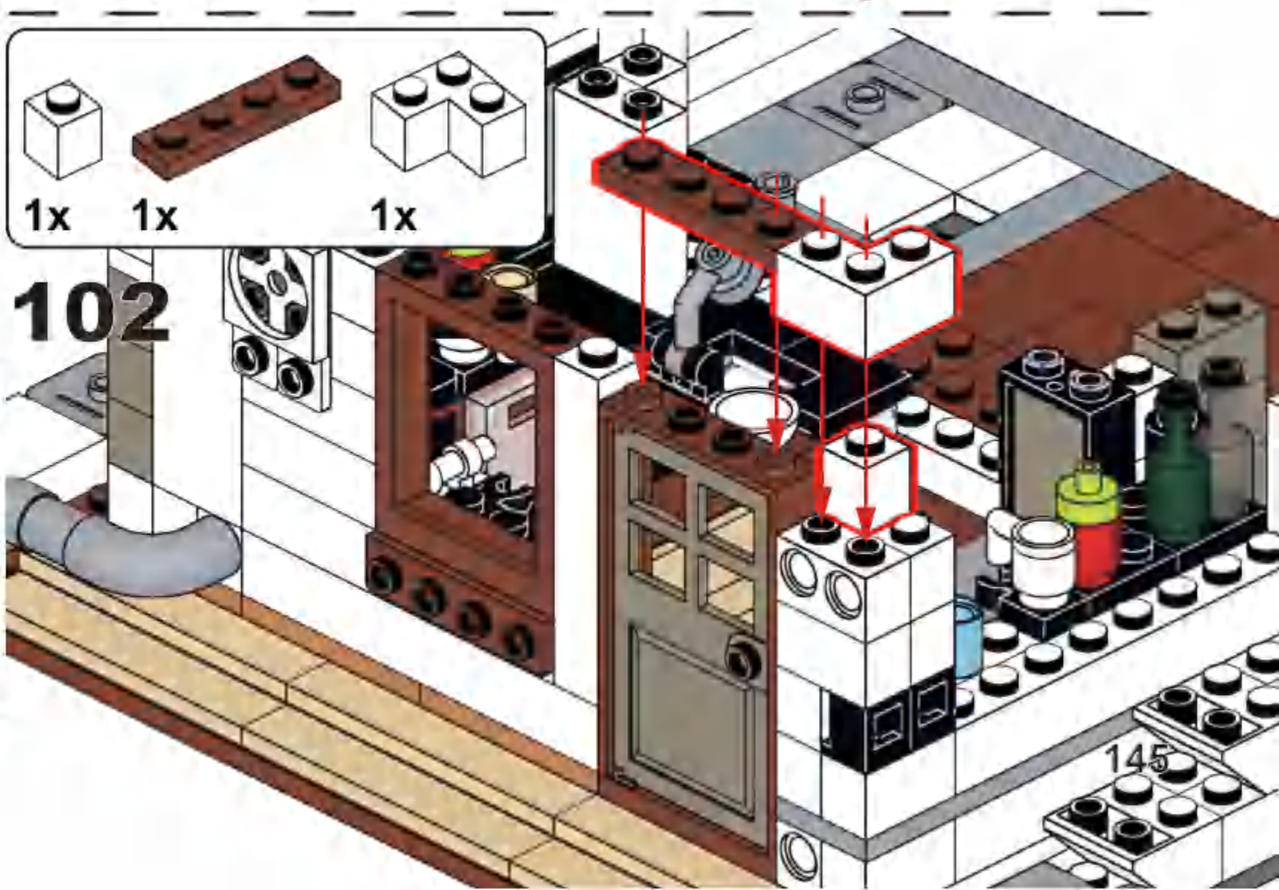
1x
1x
1x
102

1x 1x

103

6x 6x

104

x6

3x

105

1x 1x

106

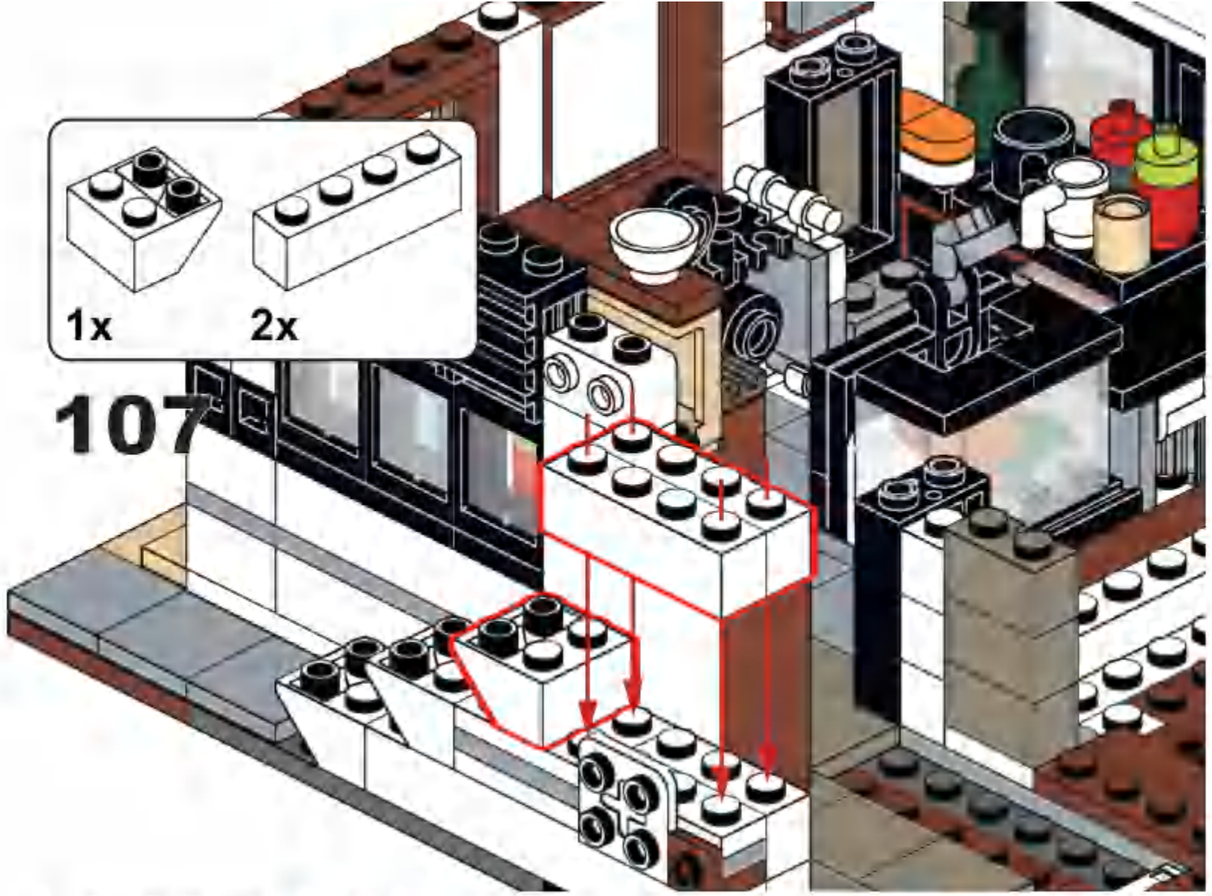
1x
2x
107

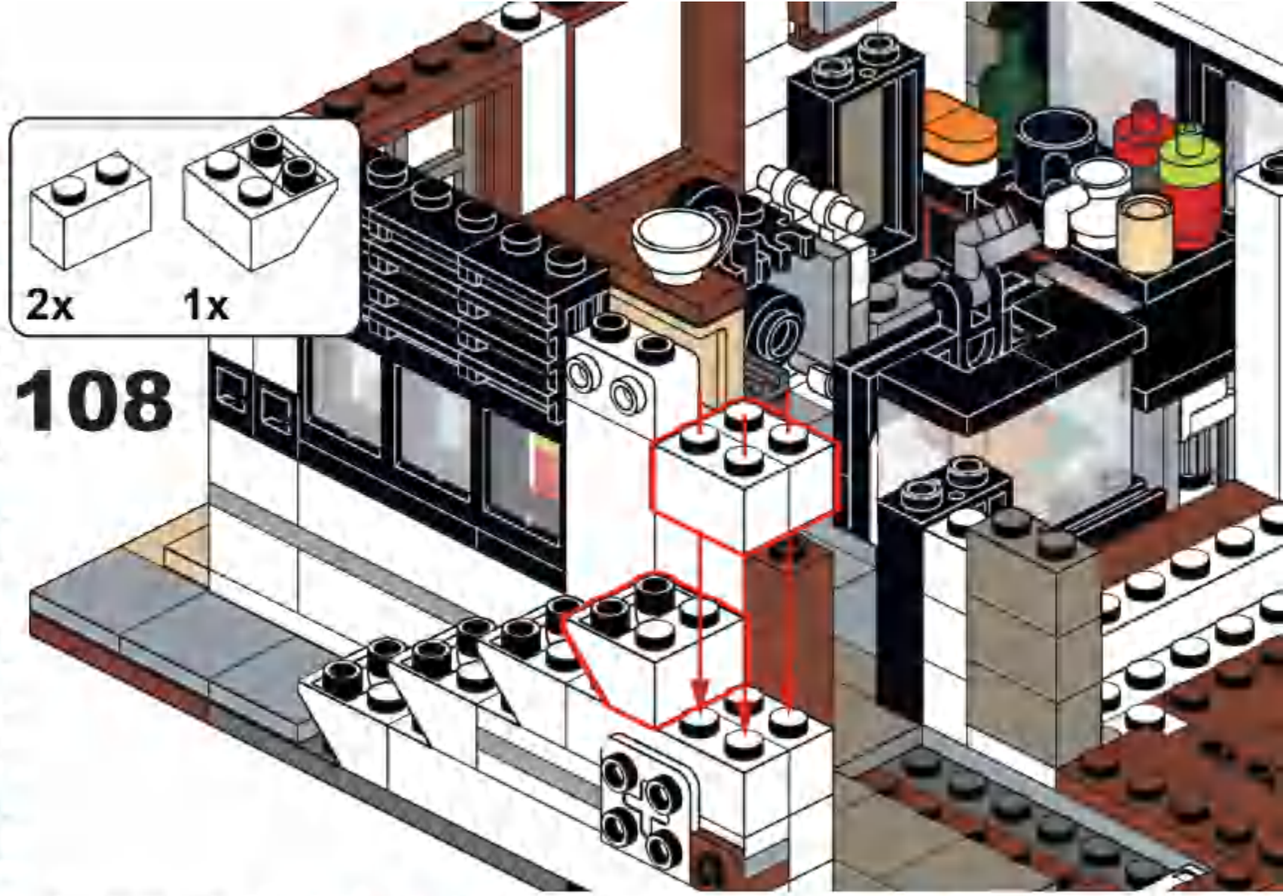
2x
1x
108

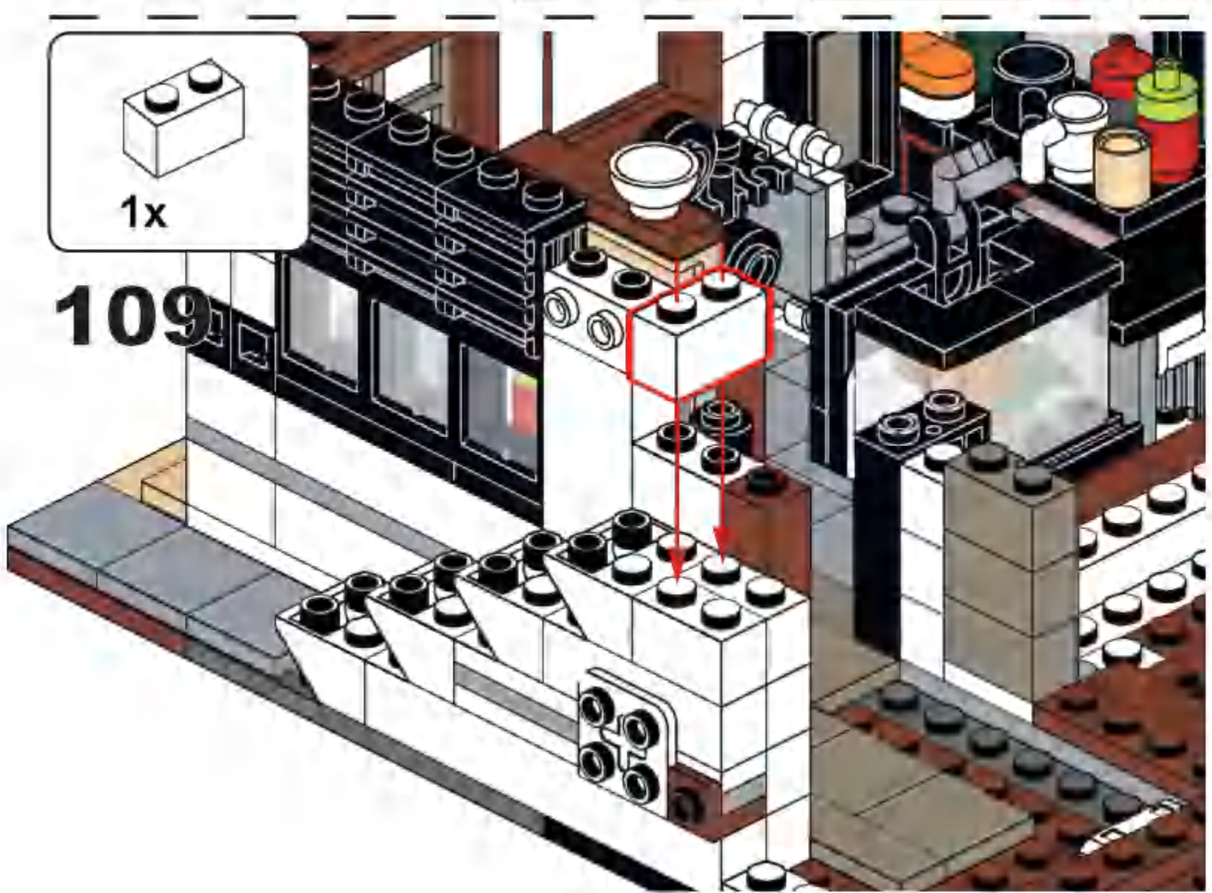
1x
109

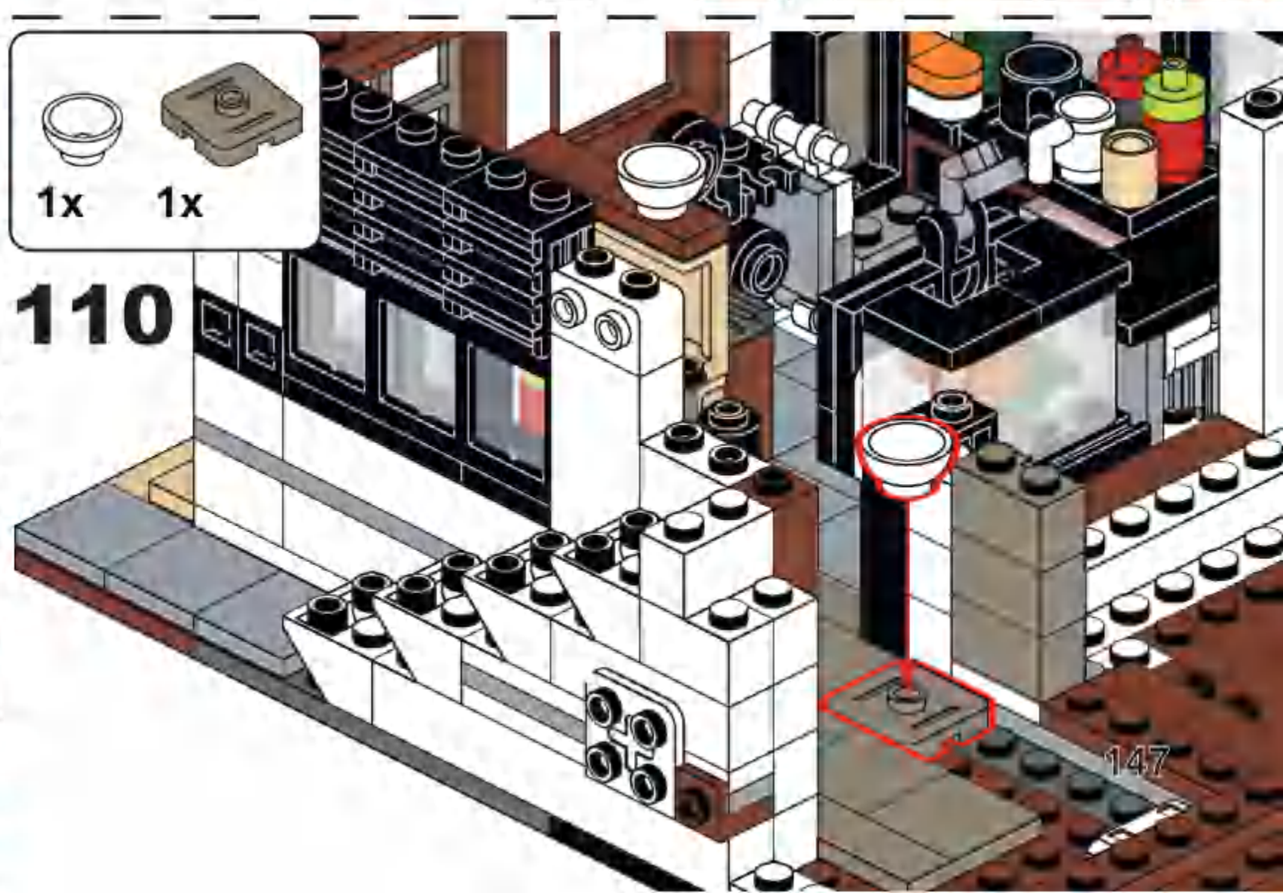
1x
1x
110

1x 1x

111

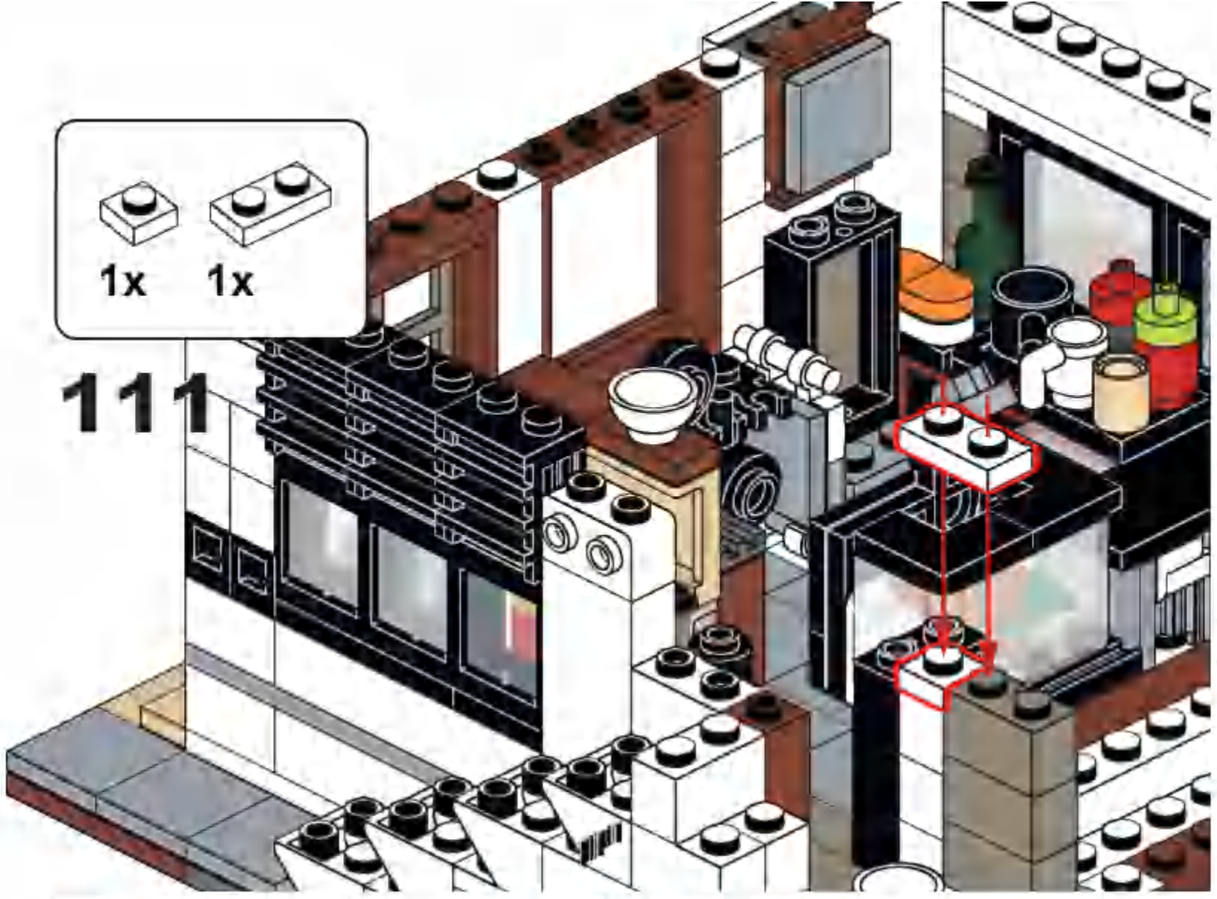

1x

112

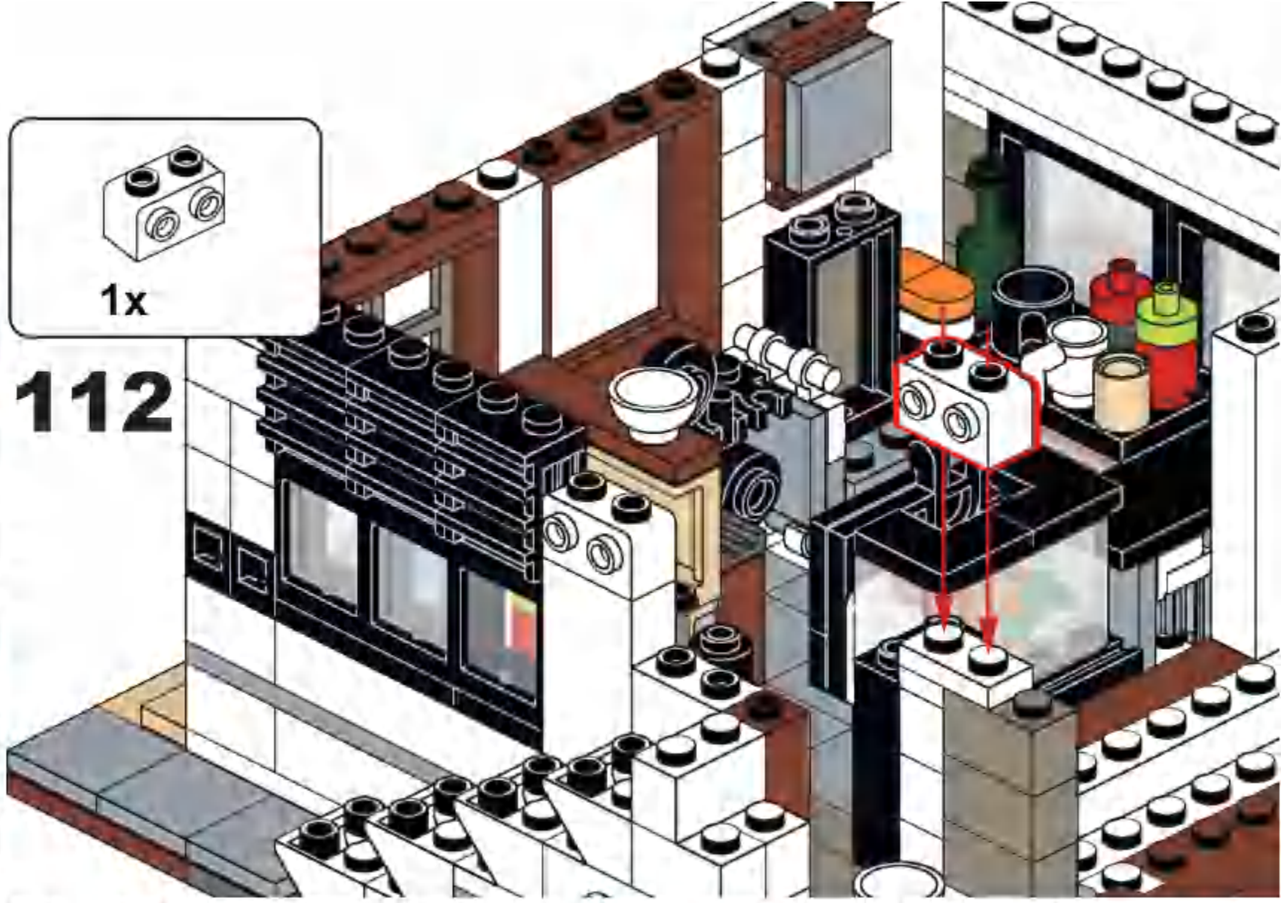

1x

113

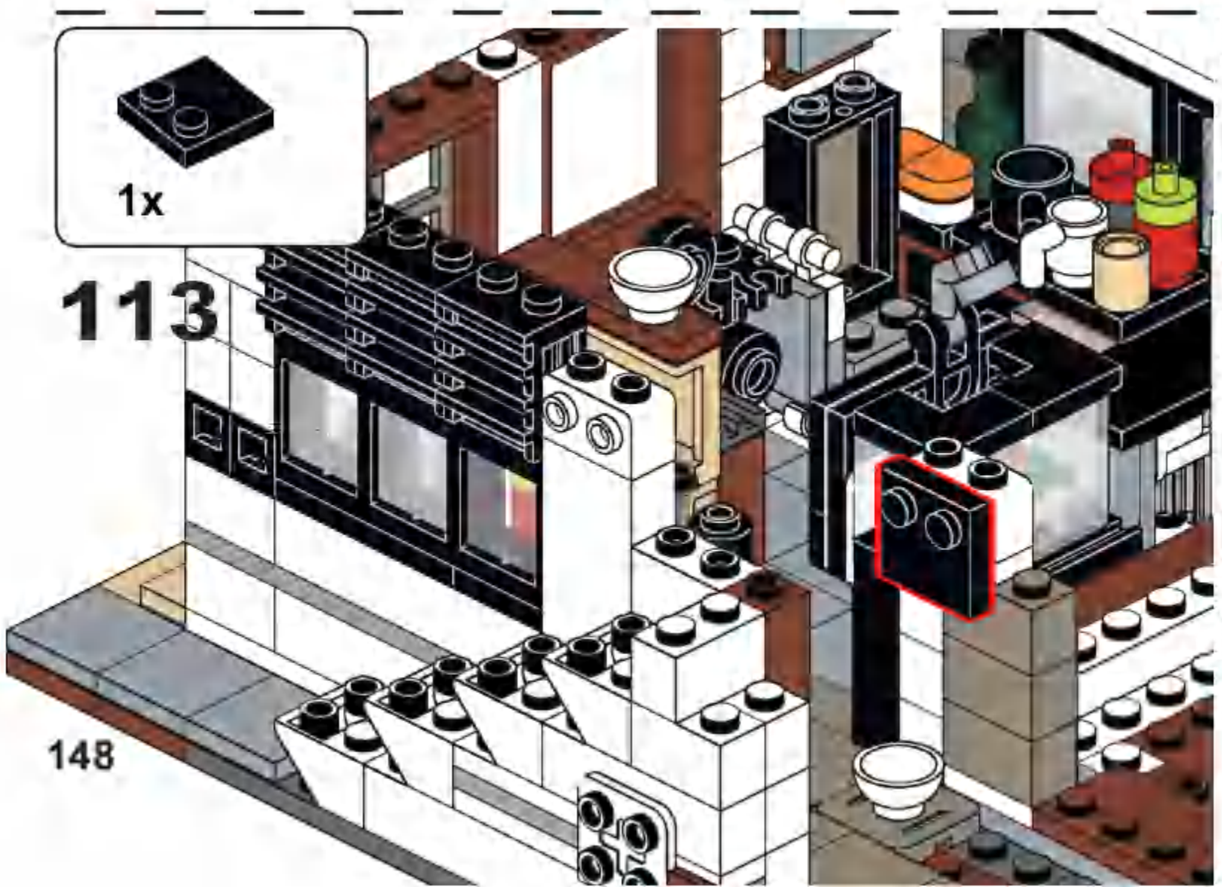

1x 2x

114

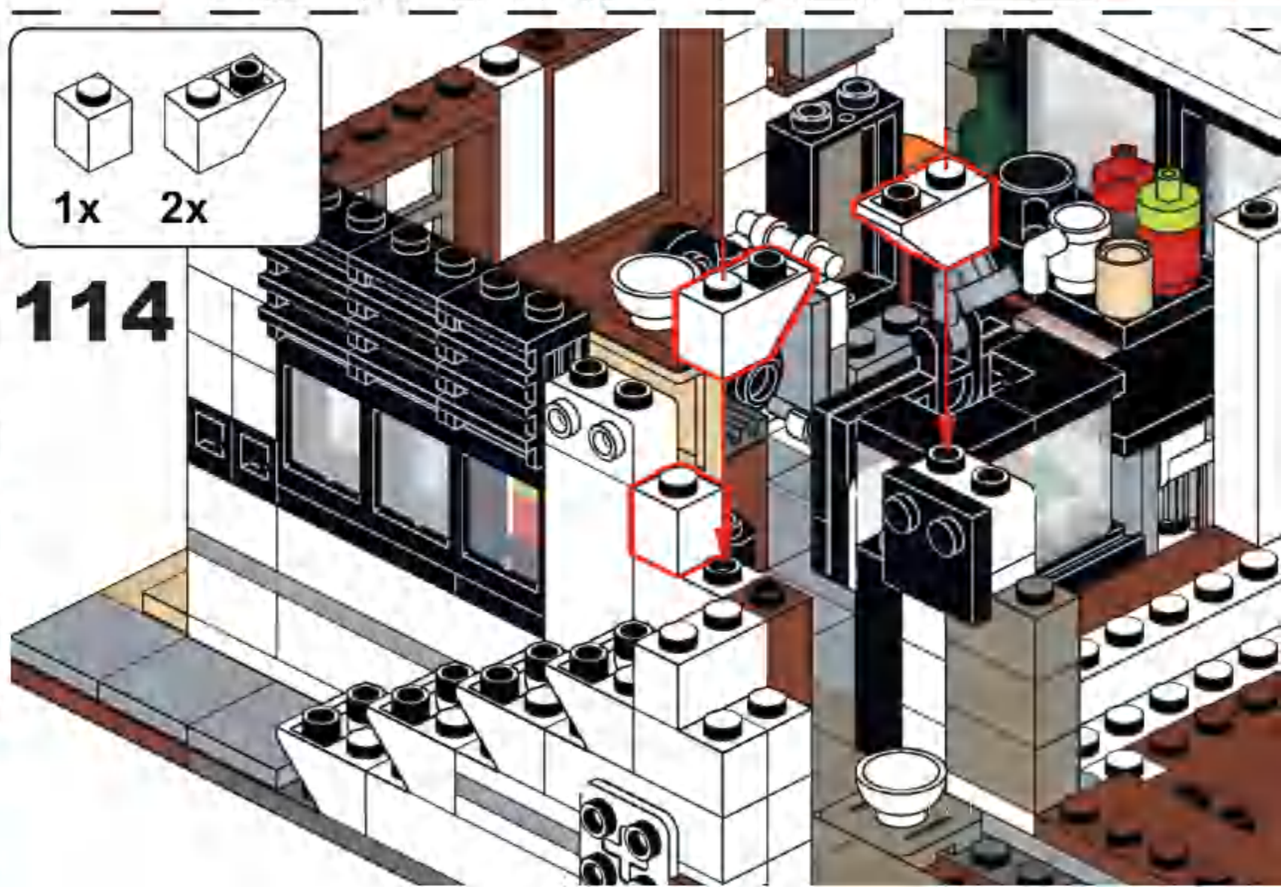

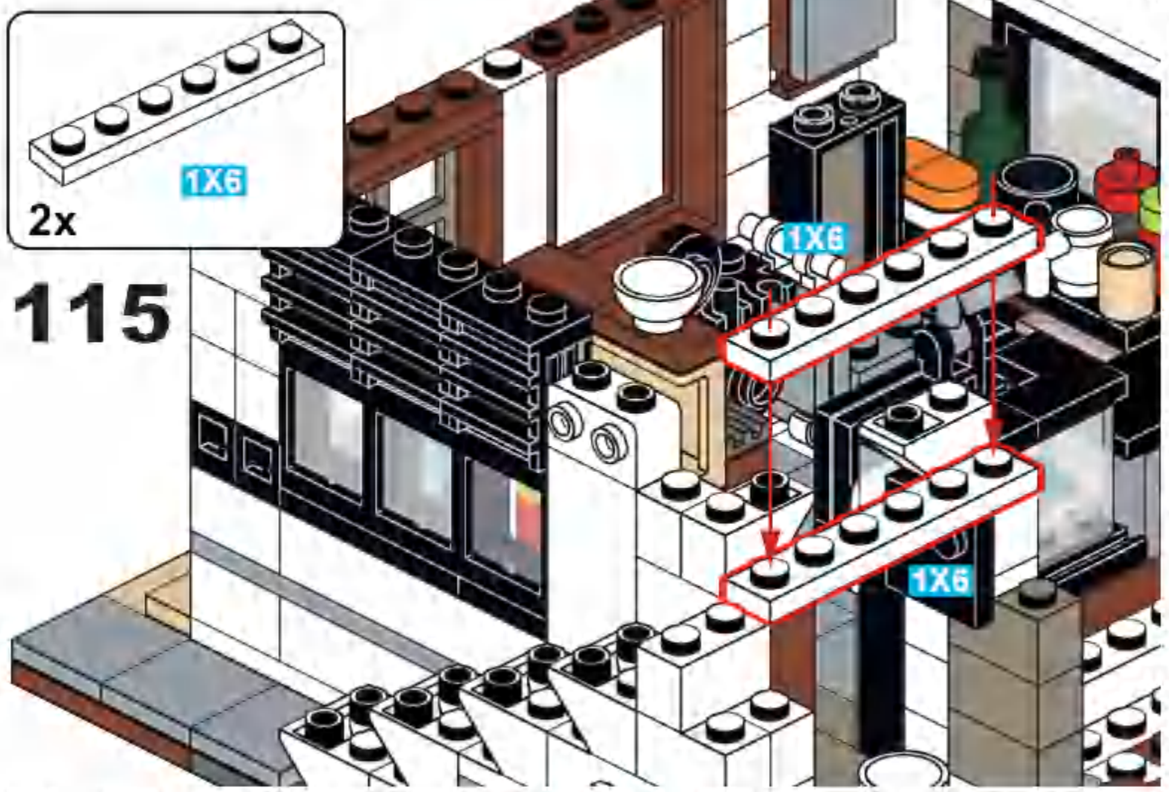
2x
1X6
115
1X6
1X6

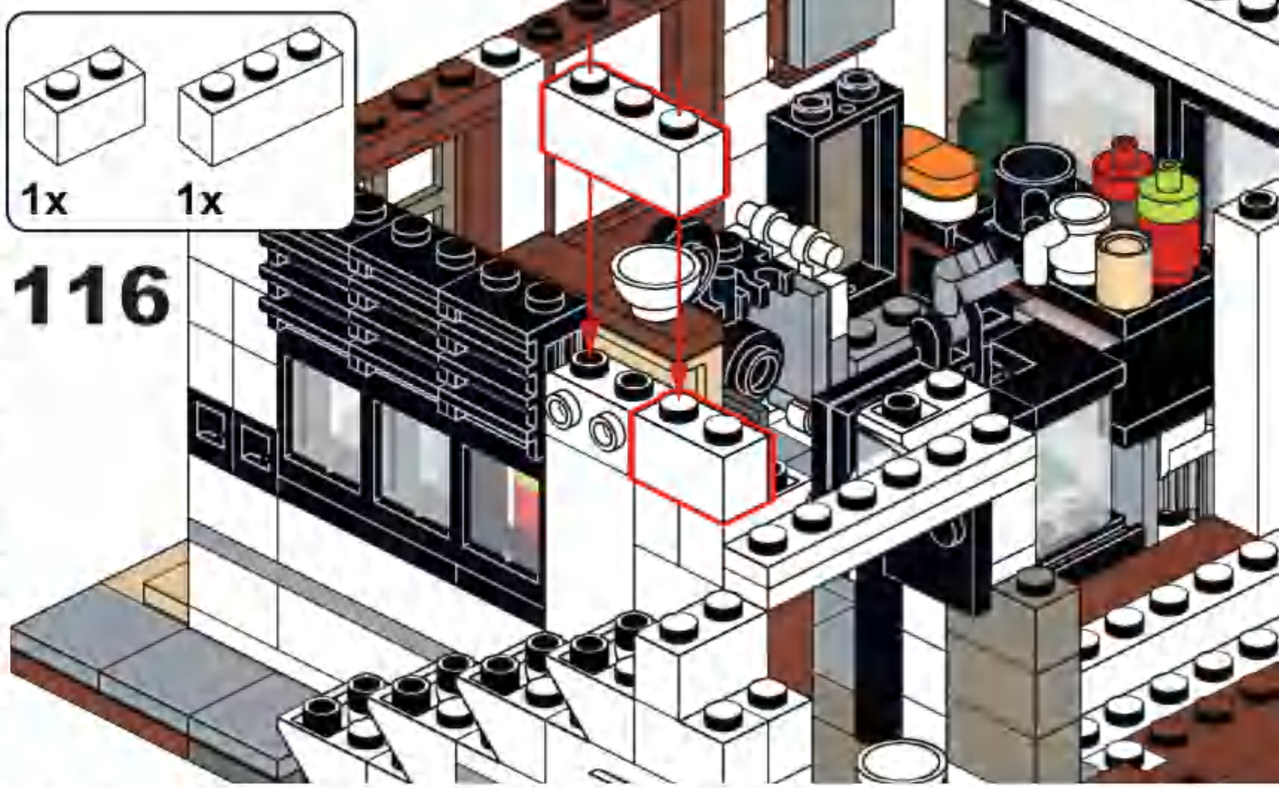
1x
1x
116

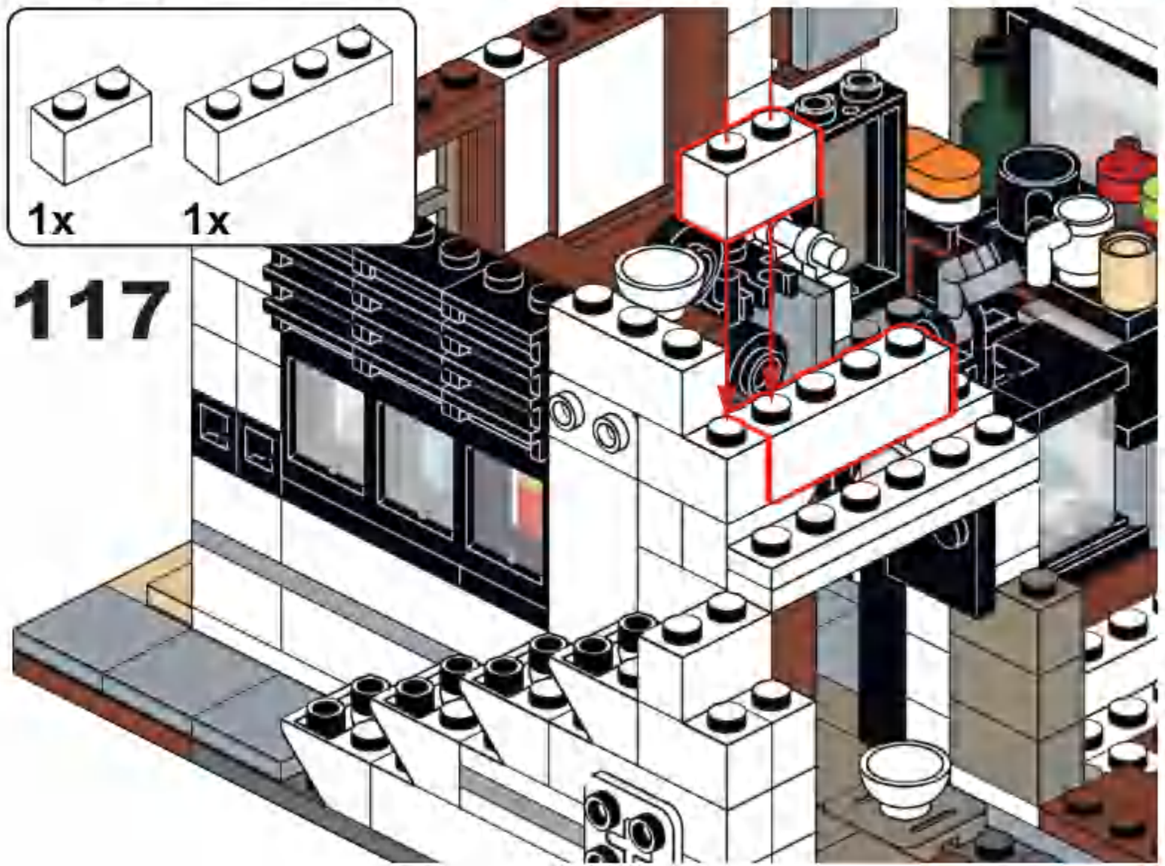
1x
1x
117

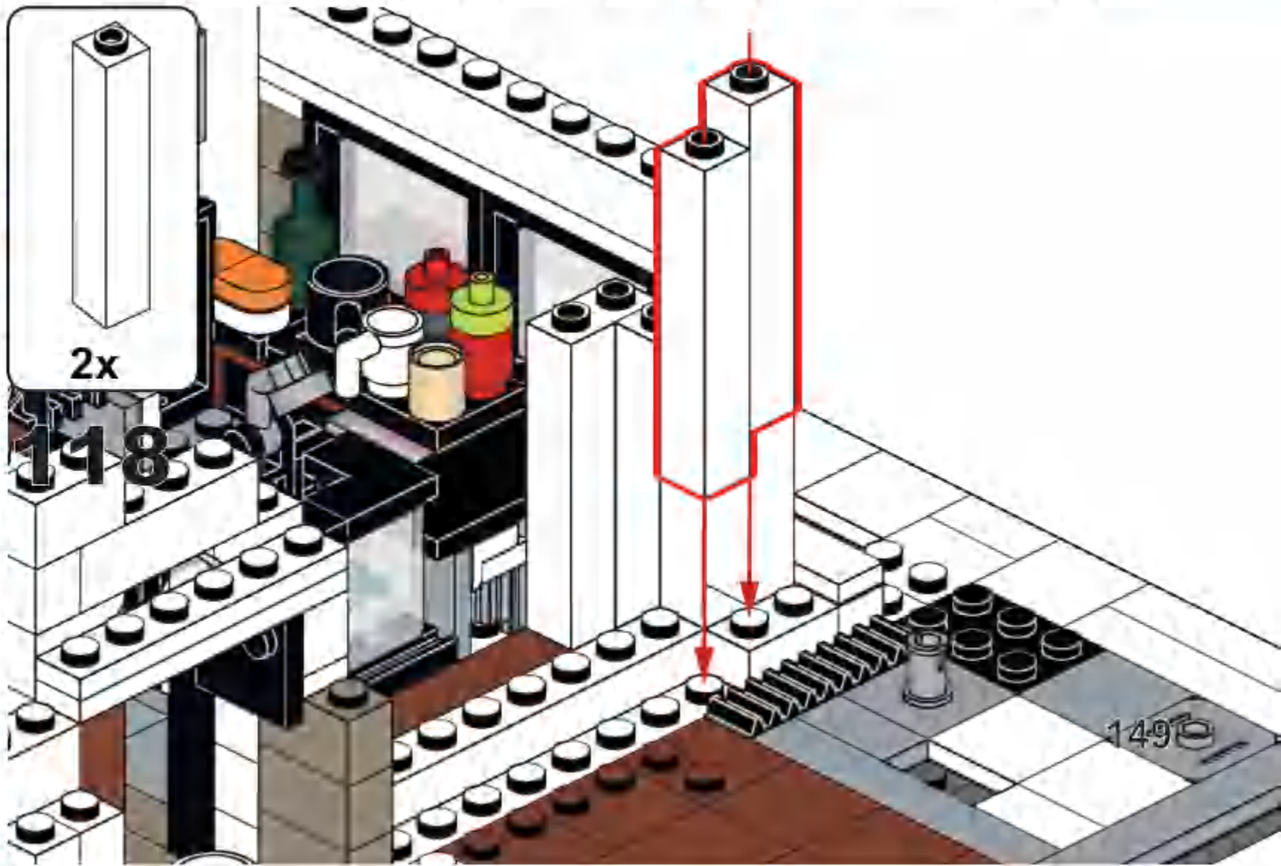
2x
118
149

1x

119

1x

1X8

1x

1X8

120

1X8

1X8

6x

121

150

6x

122

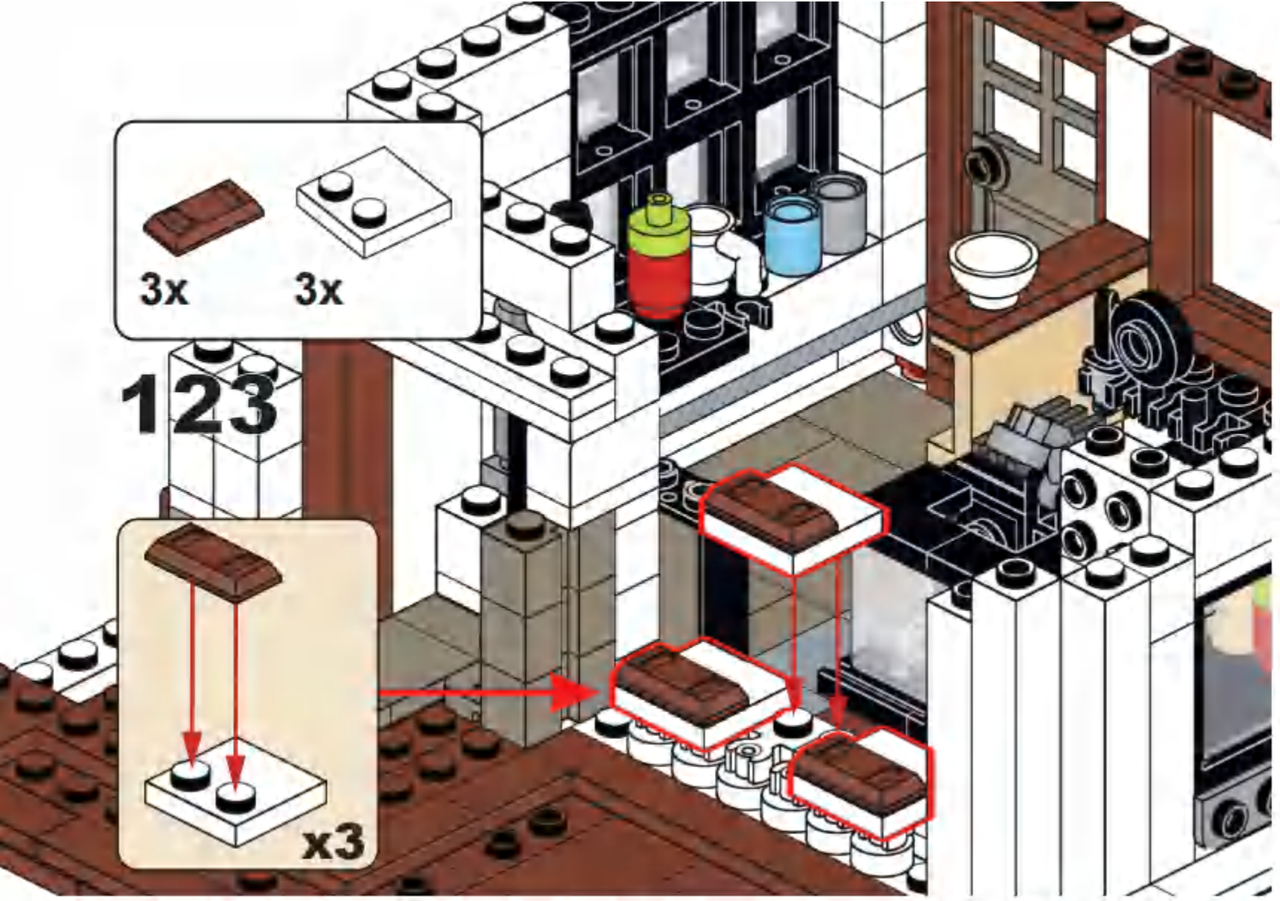

123

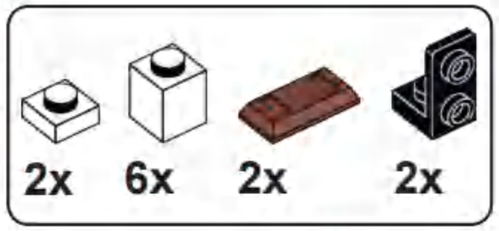

124

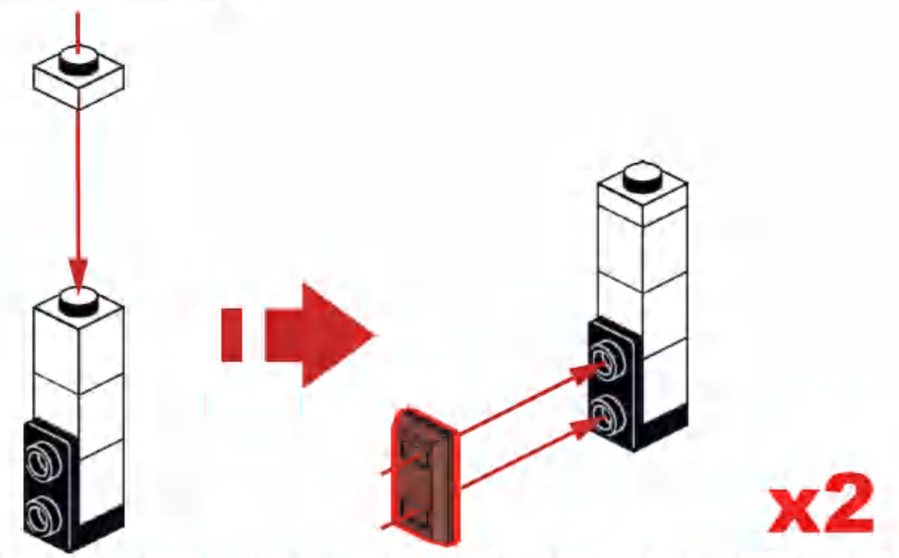

125

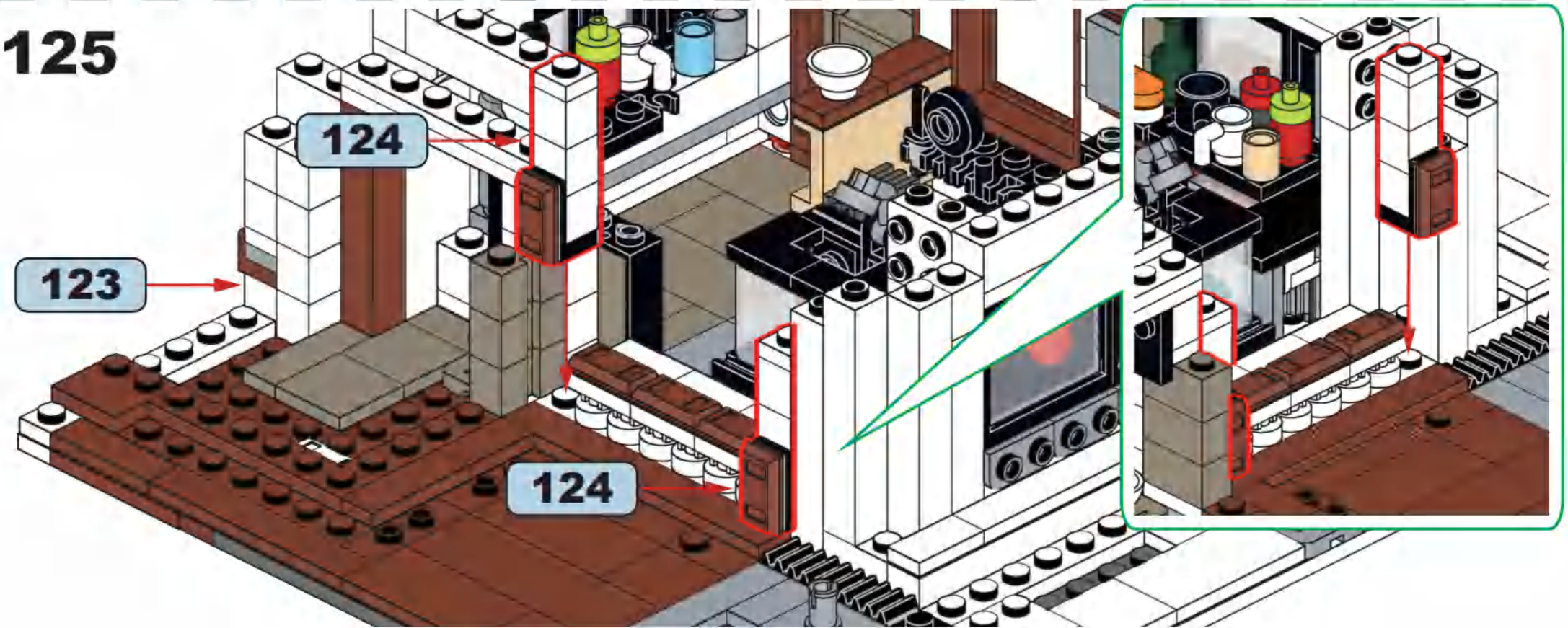

1x 1x 1x 1x

126

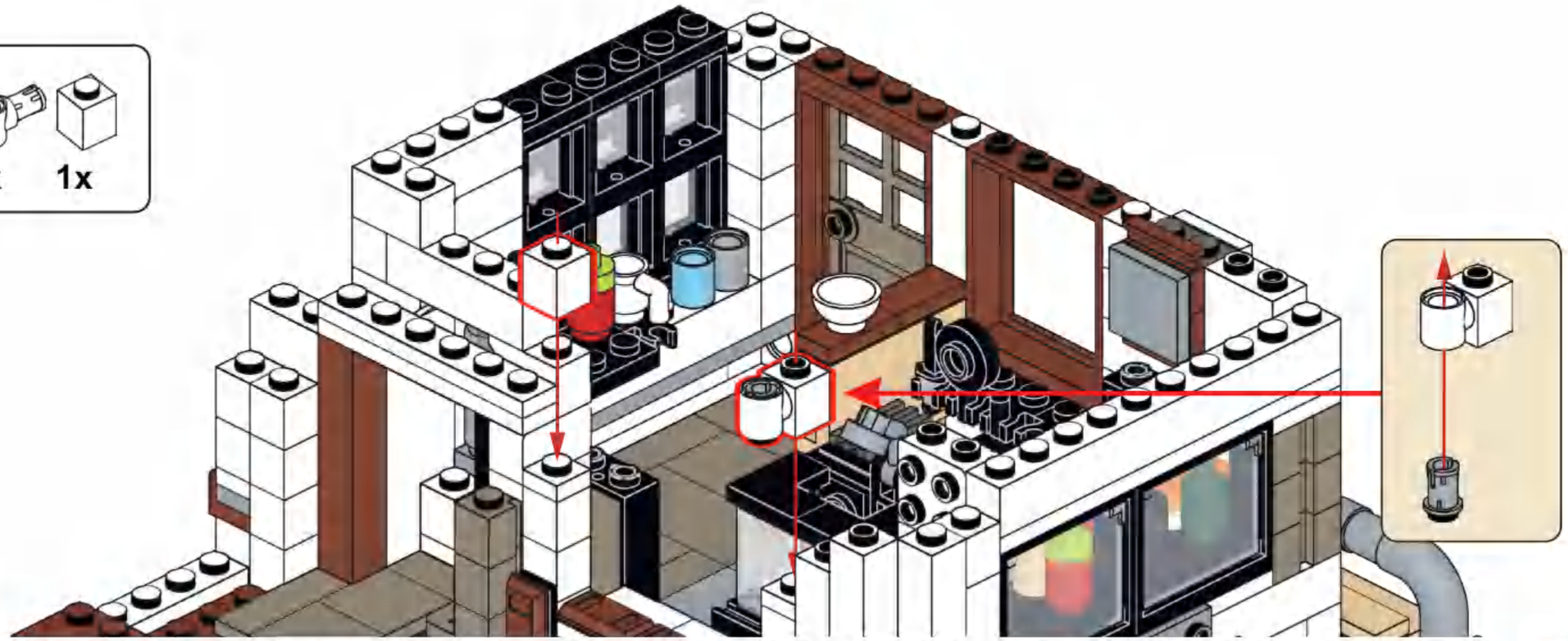

1x

127

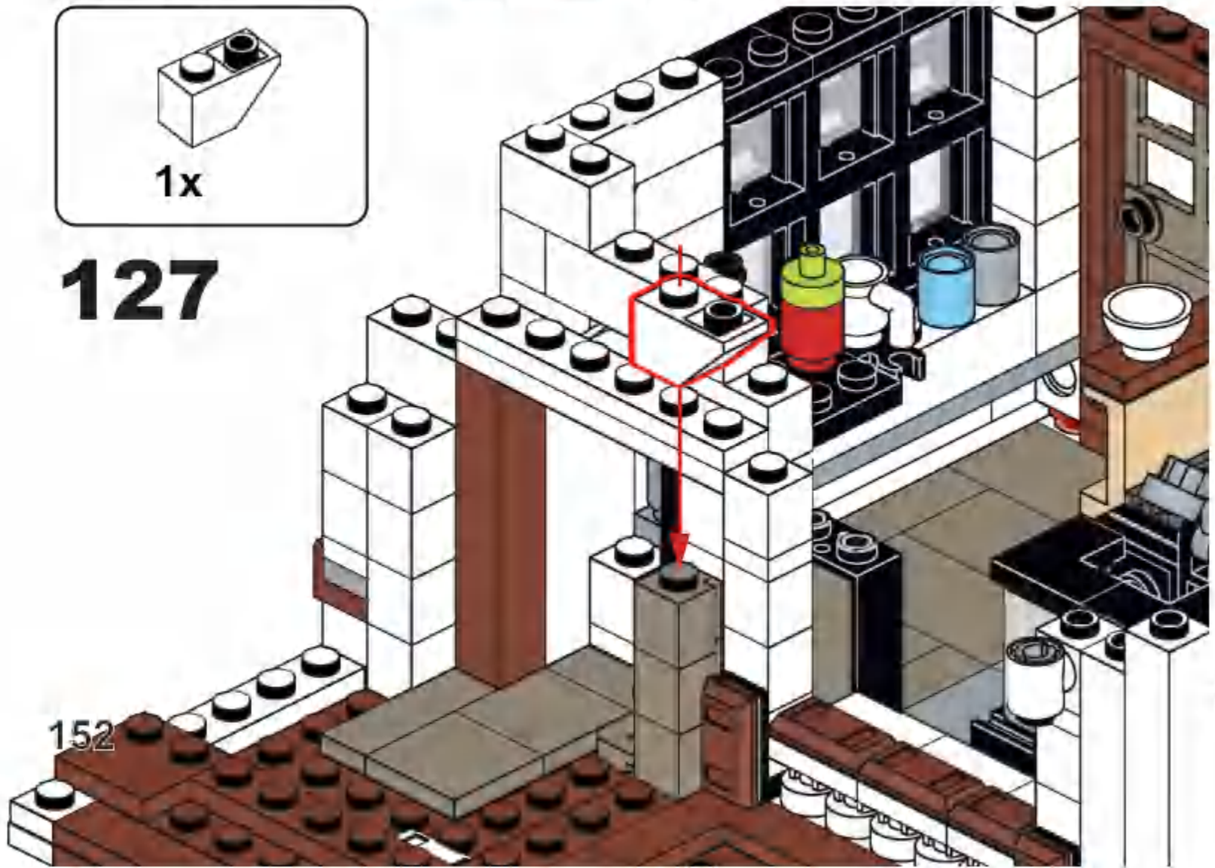

1x

128

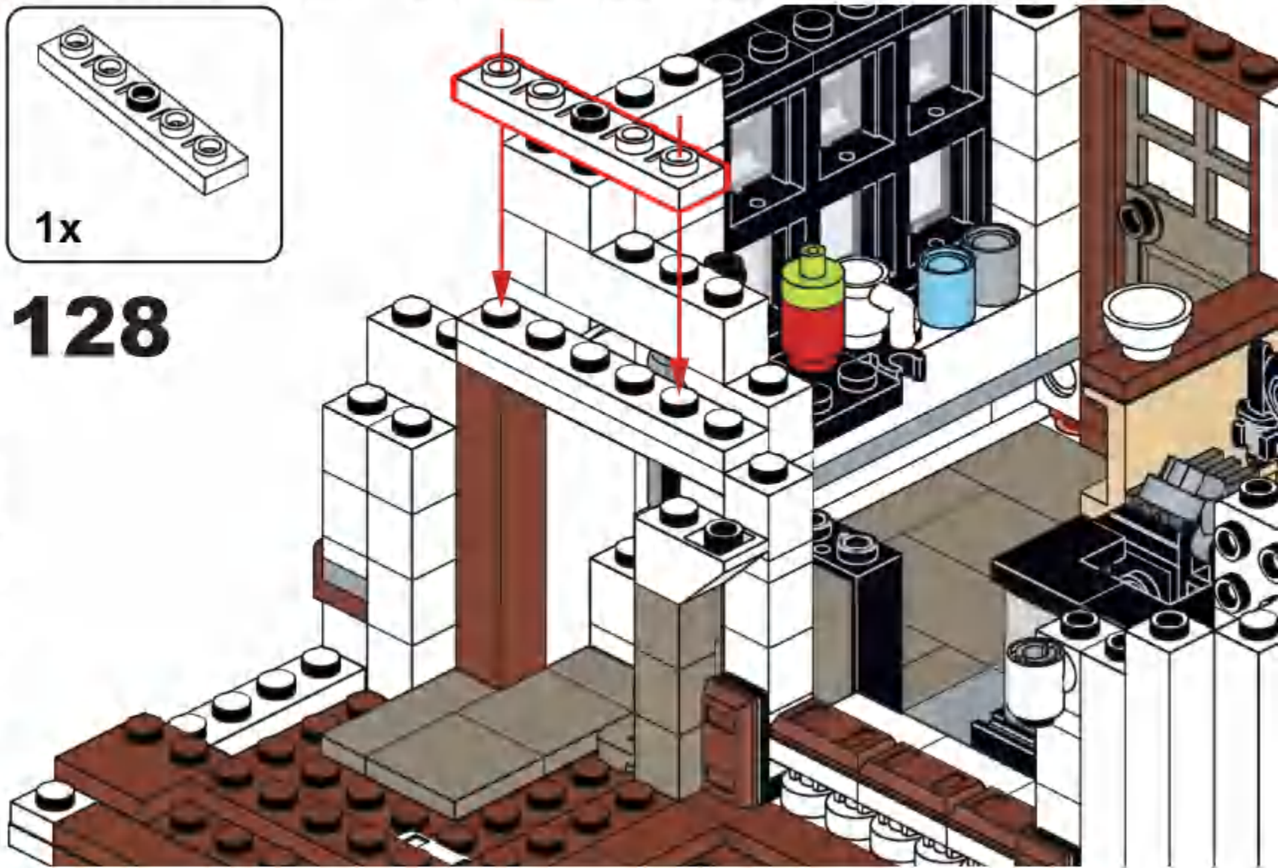

1x 1x

129

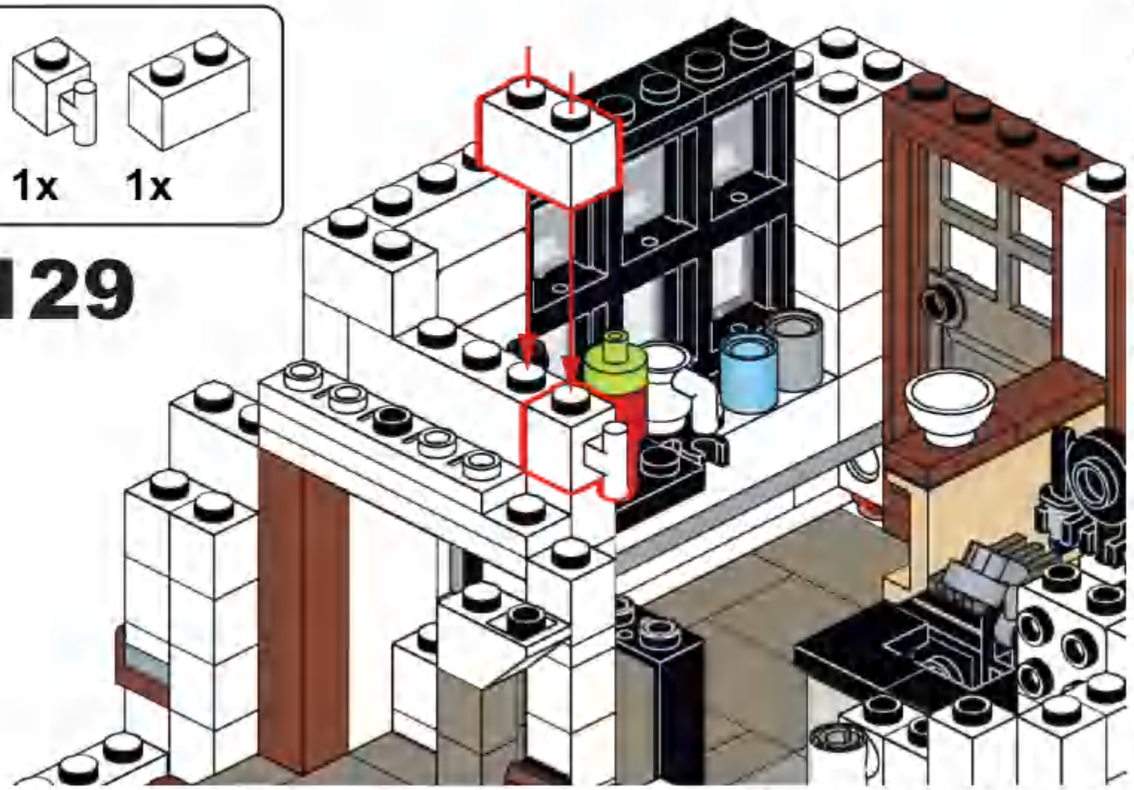

2x 1x 2x

130

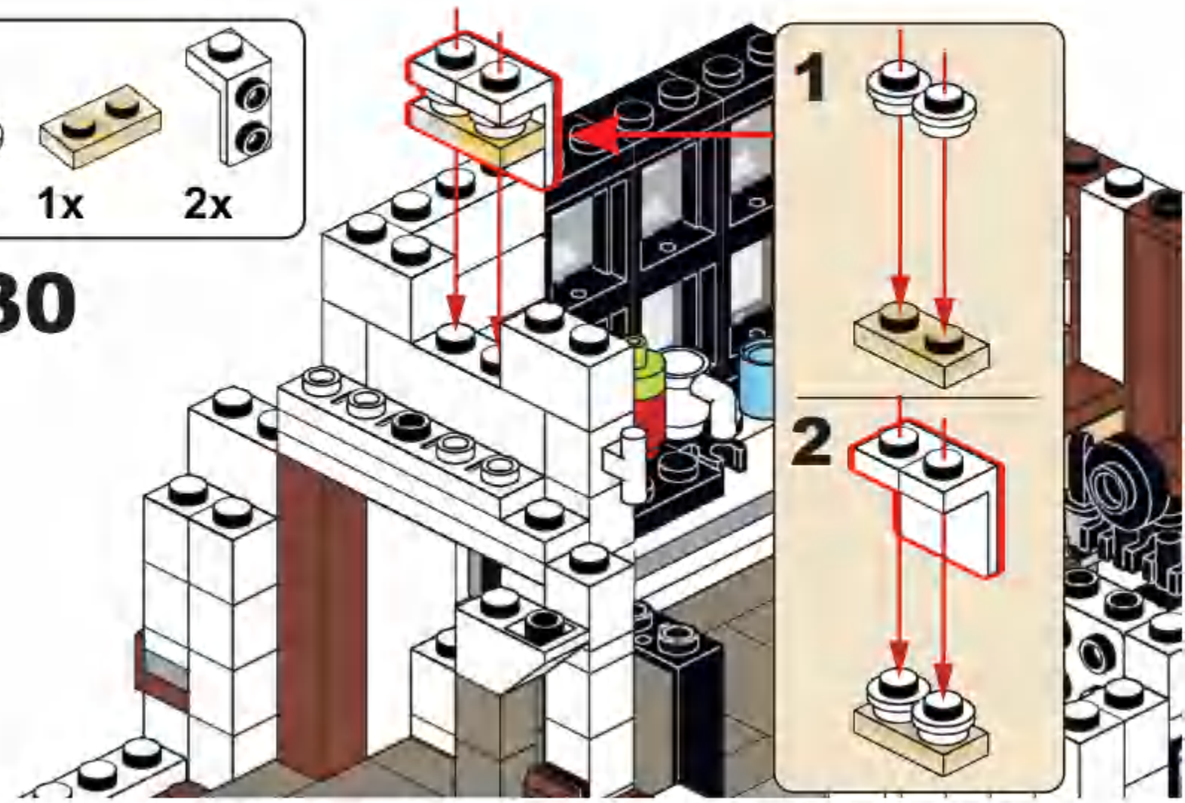

2x

131

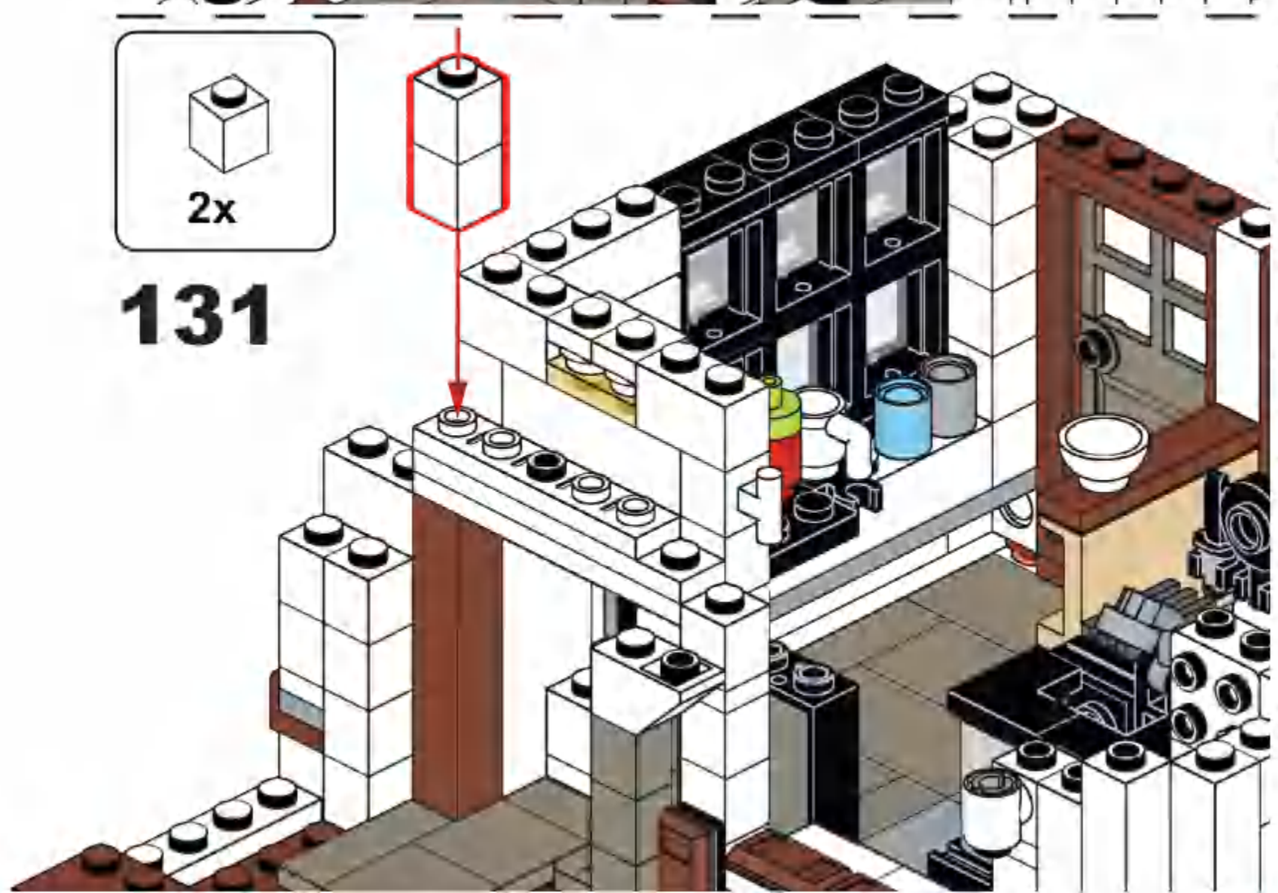

1x 1x

132

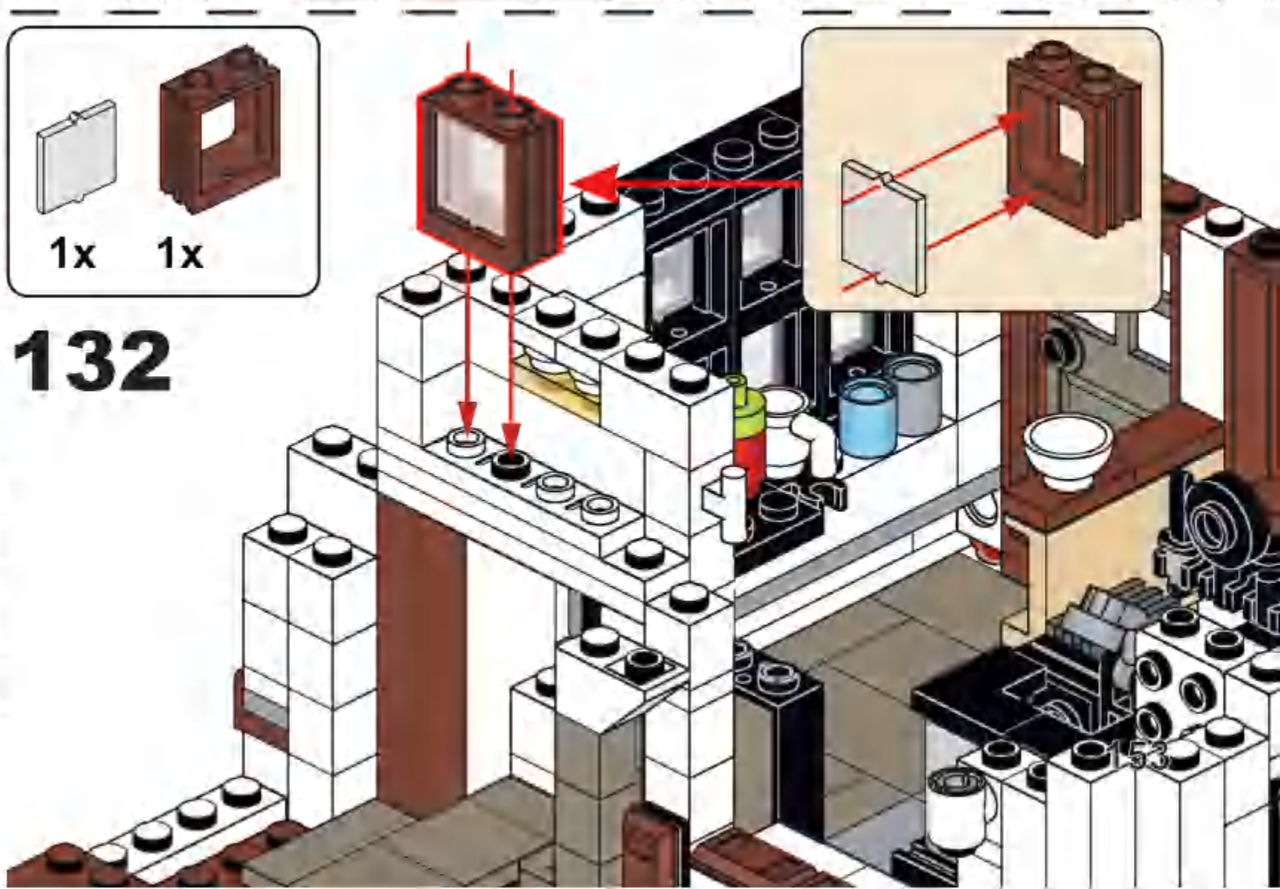

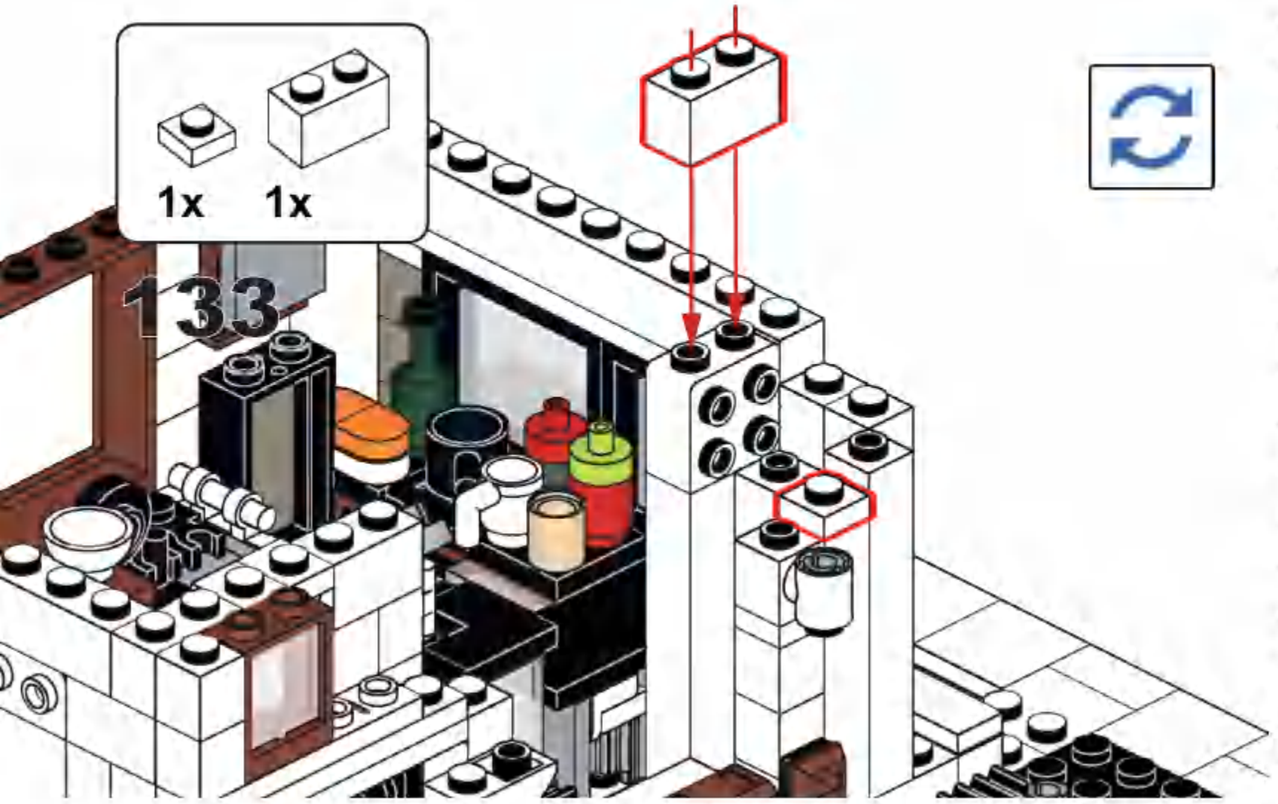
1x
1x
133

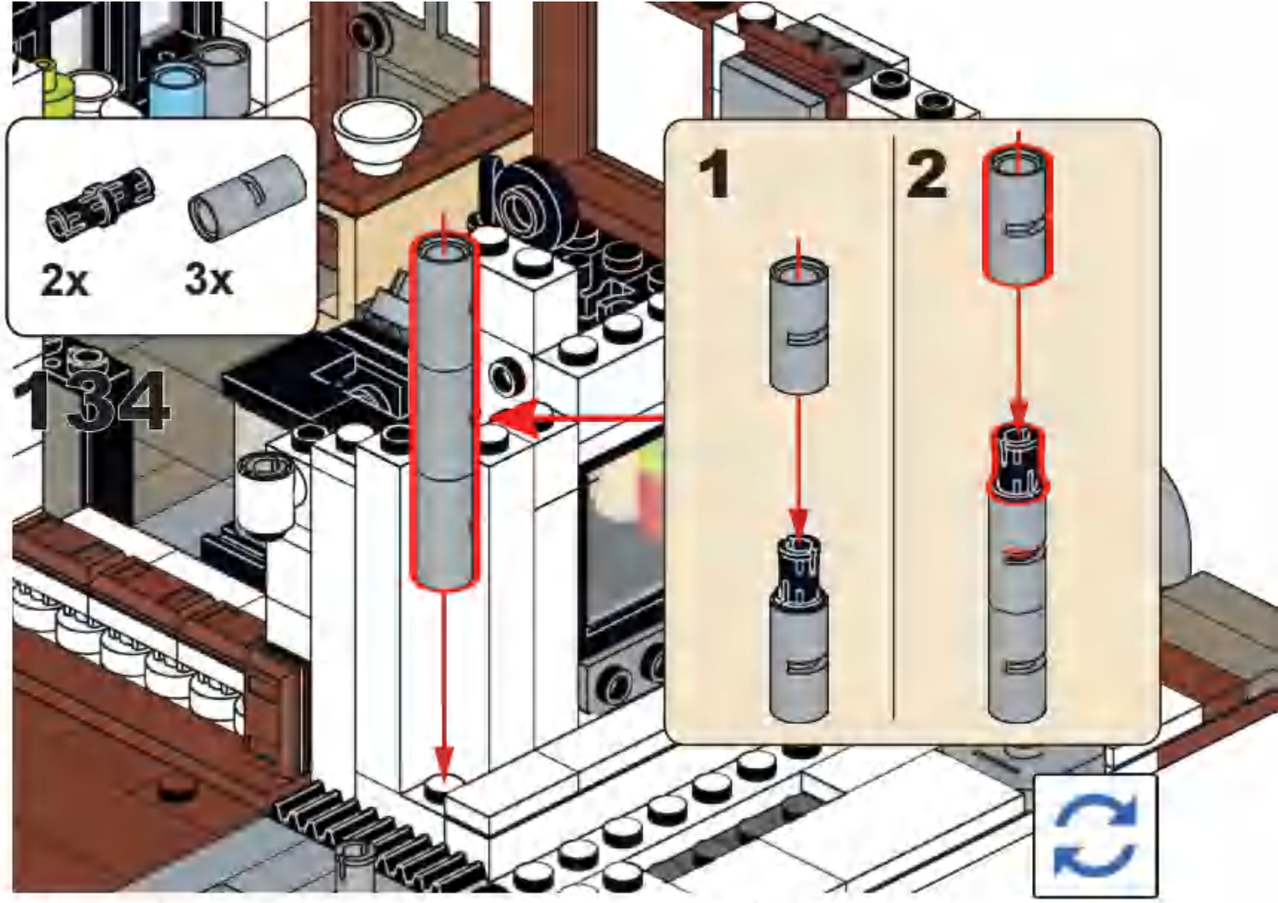
2x
3x
134
1
2

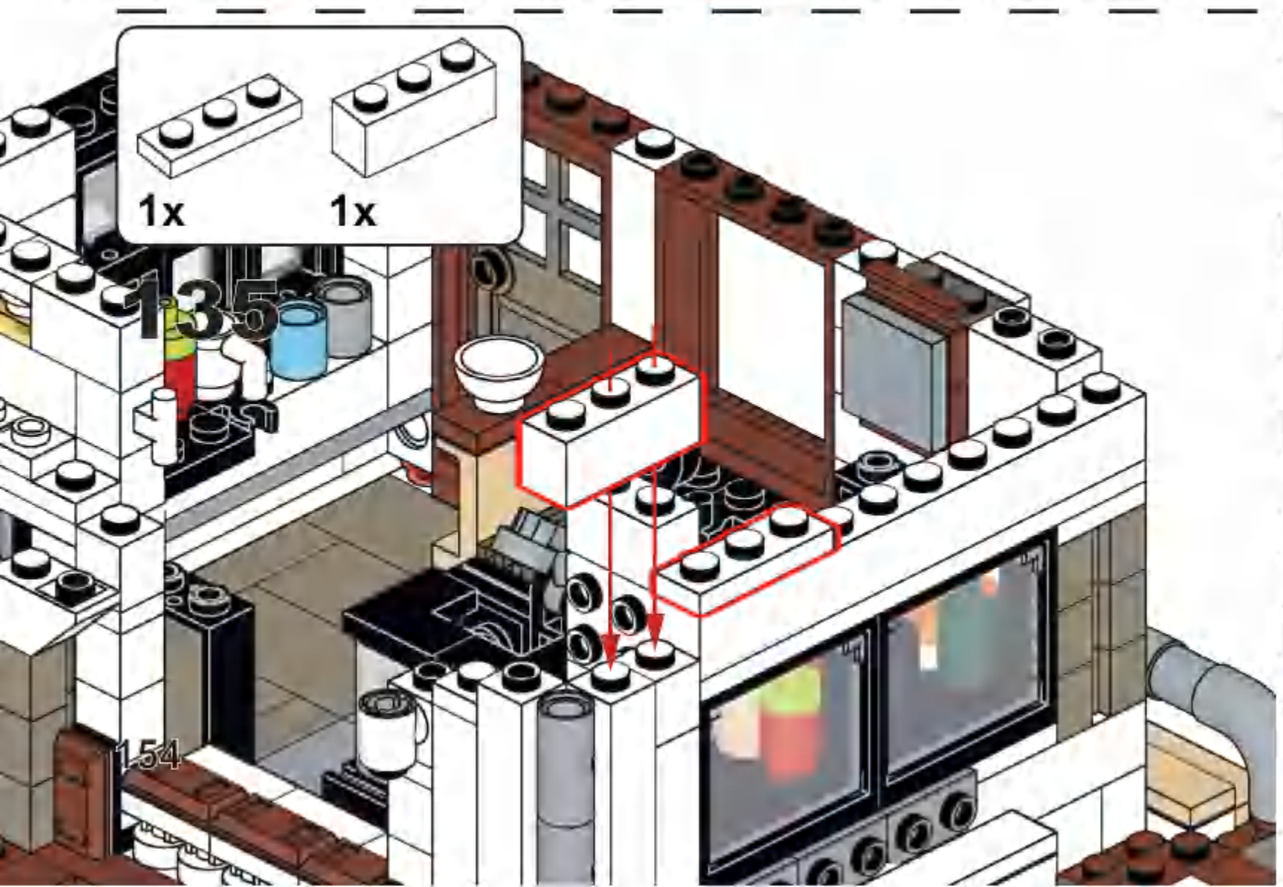
1x
1x
135

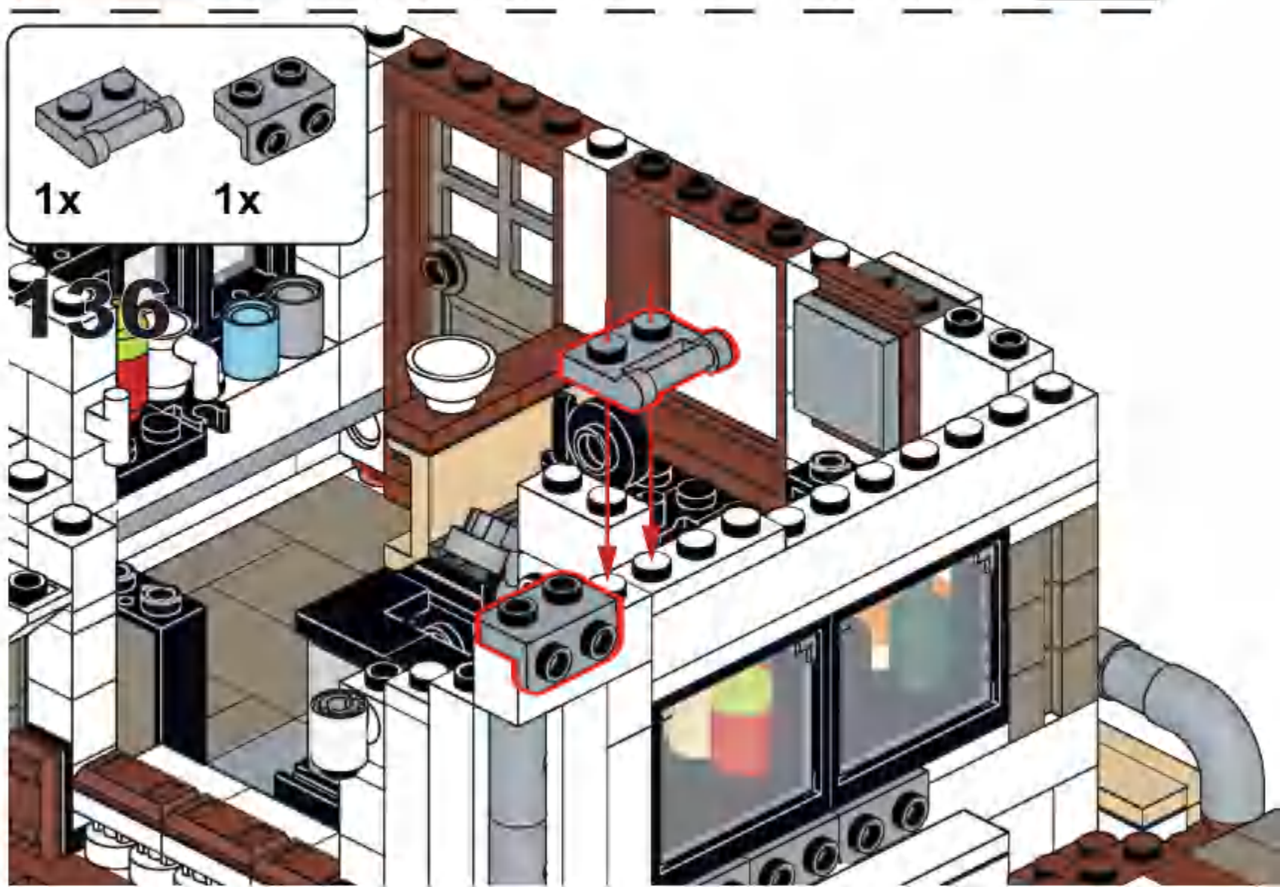
1x
1x
136

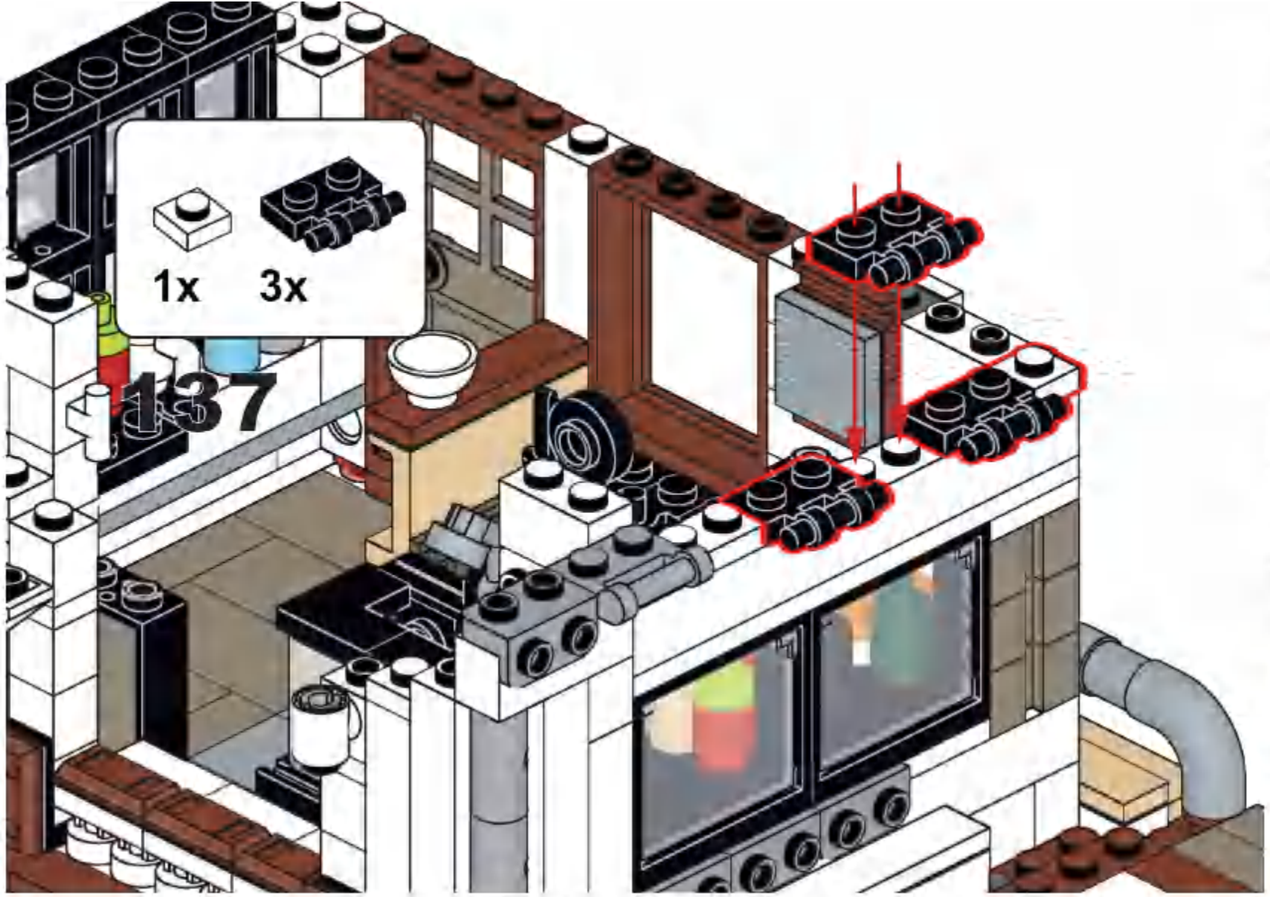

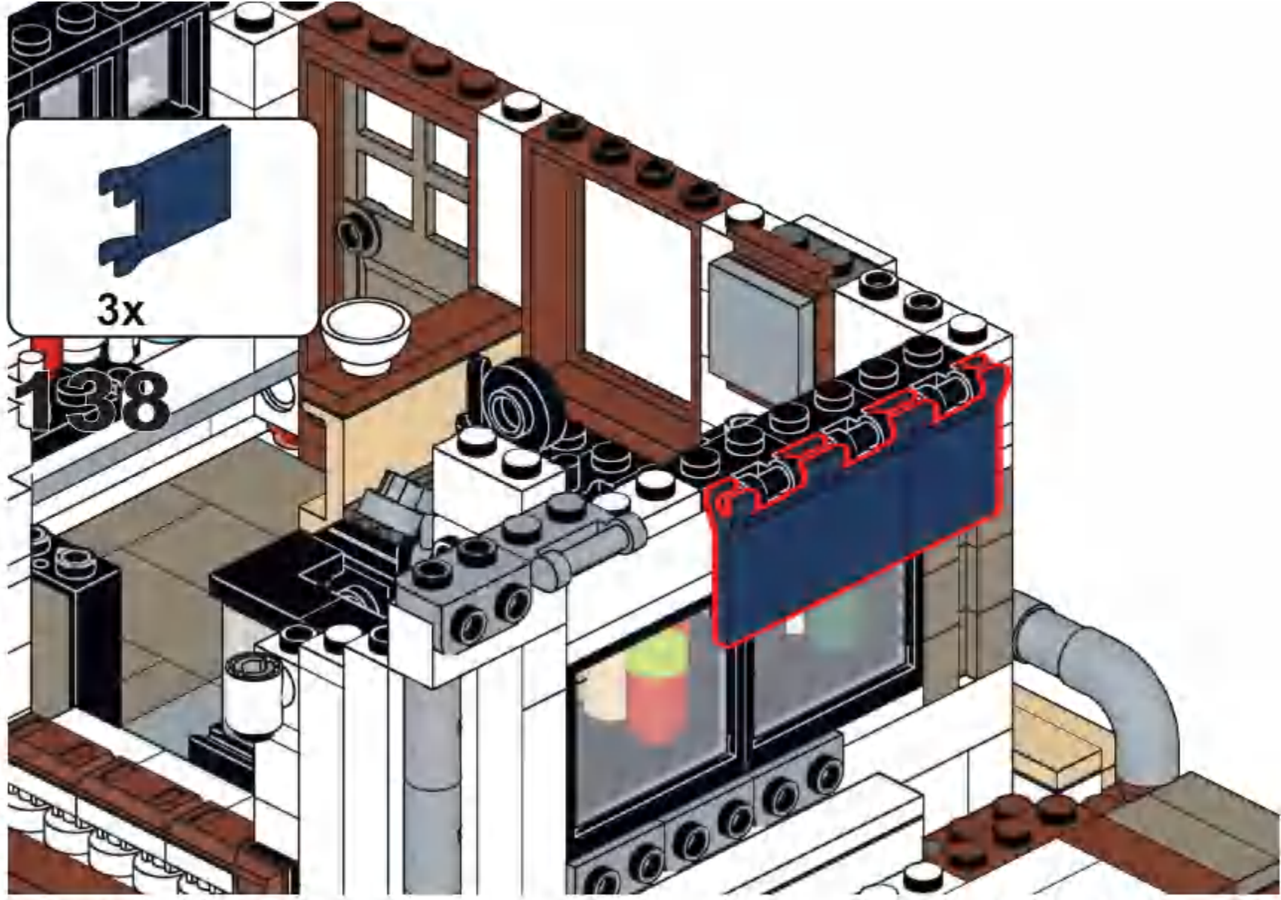

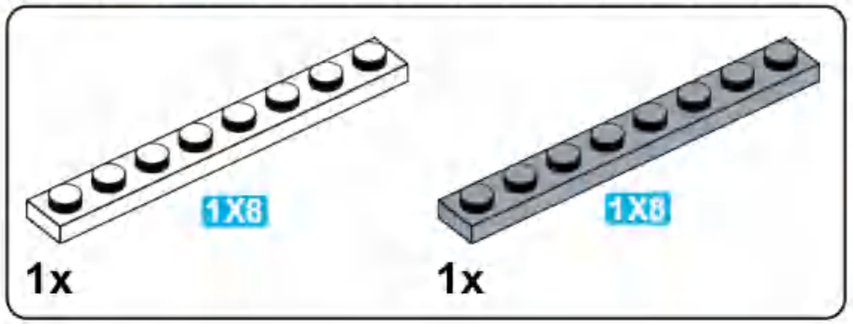

139

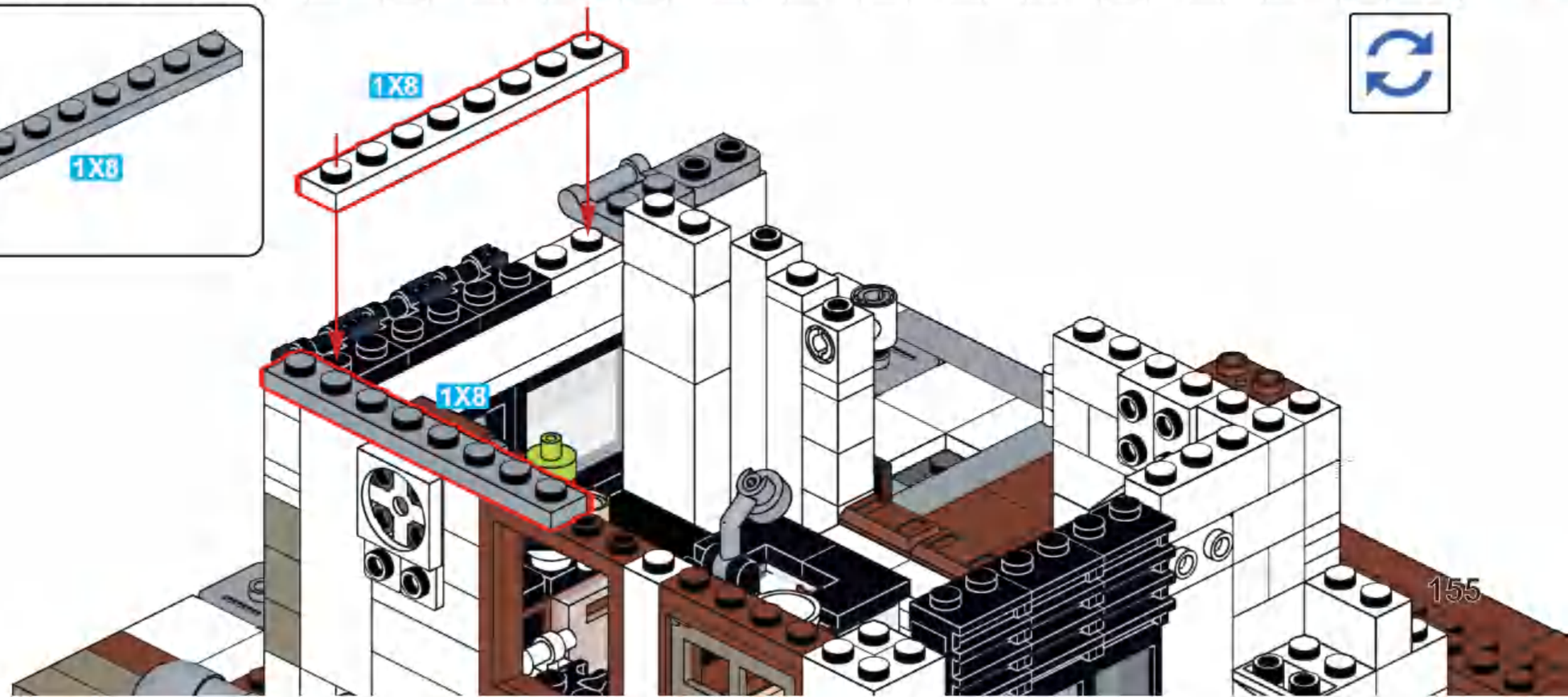

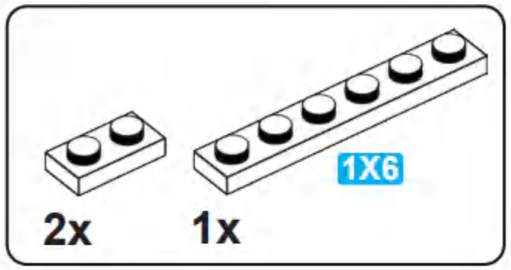

140

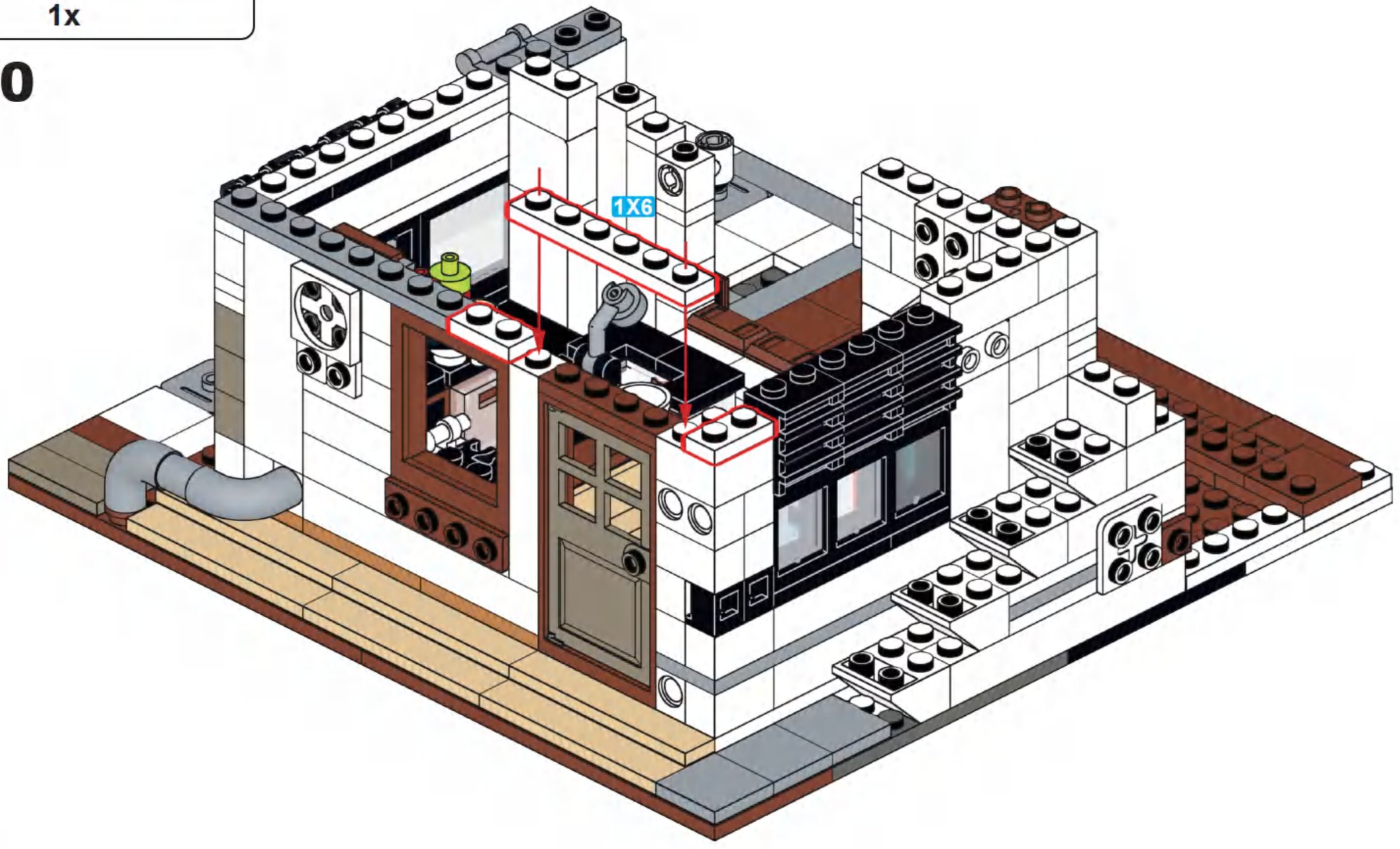

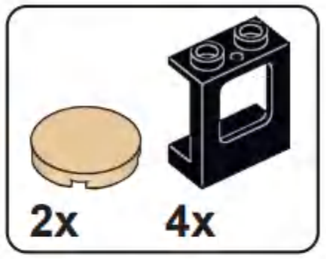

141

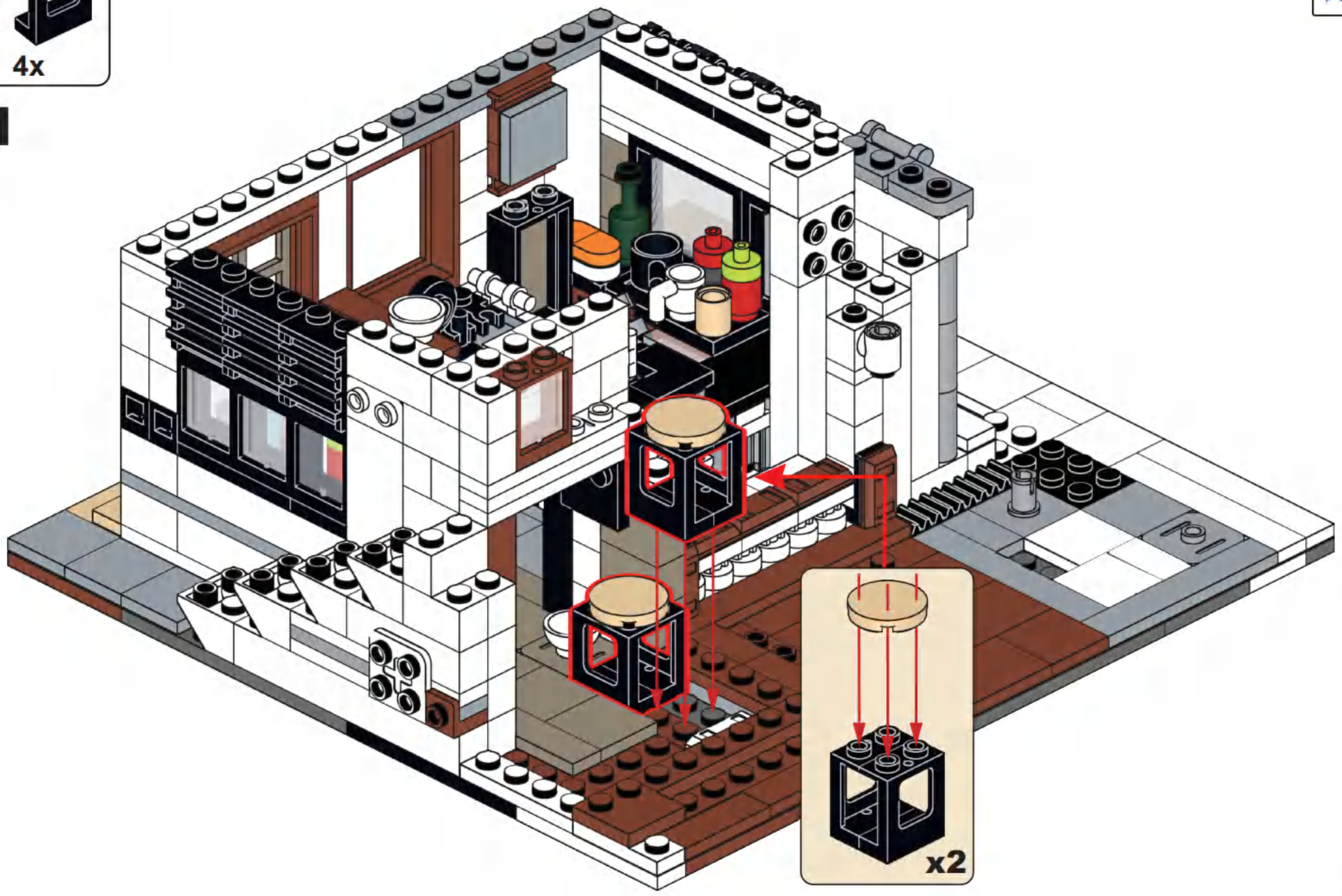

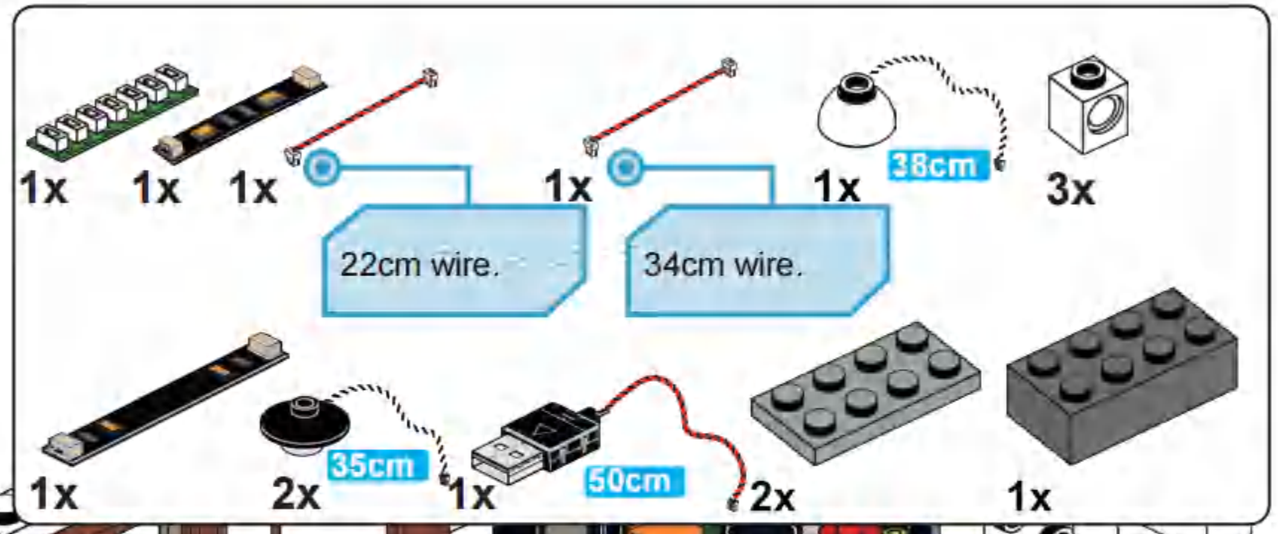
1x
1x
1x
22cm wire.
1x
34cm wire.
1x
38cm
3x
1x
2x
35cm
1x
50cm
2x
1x

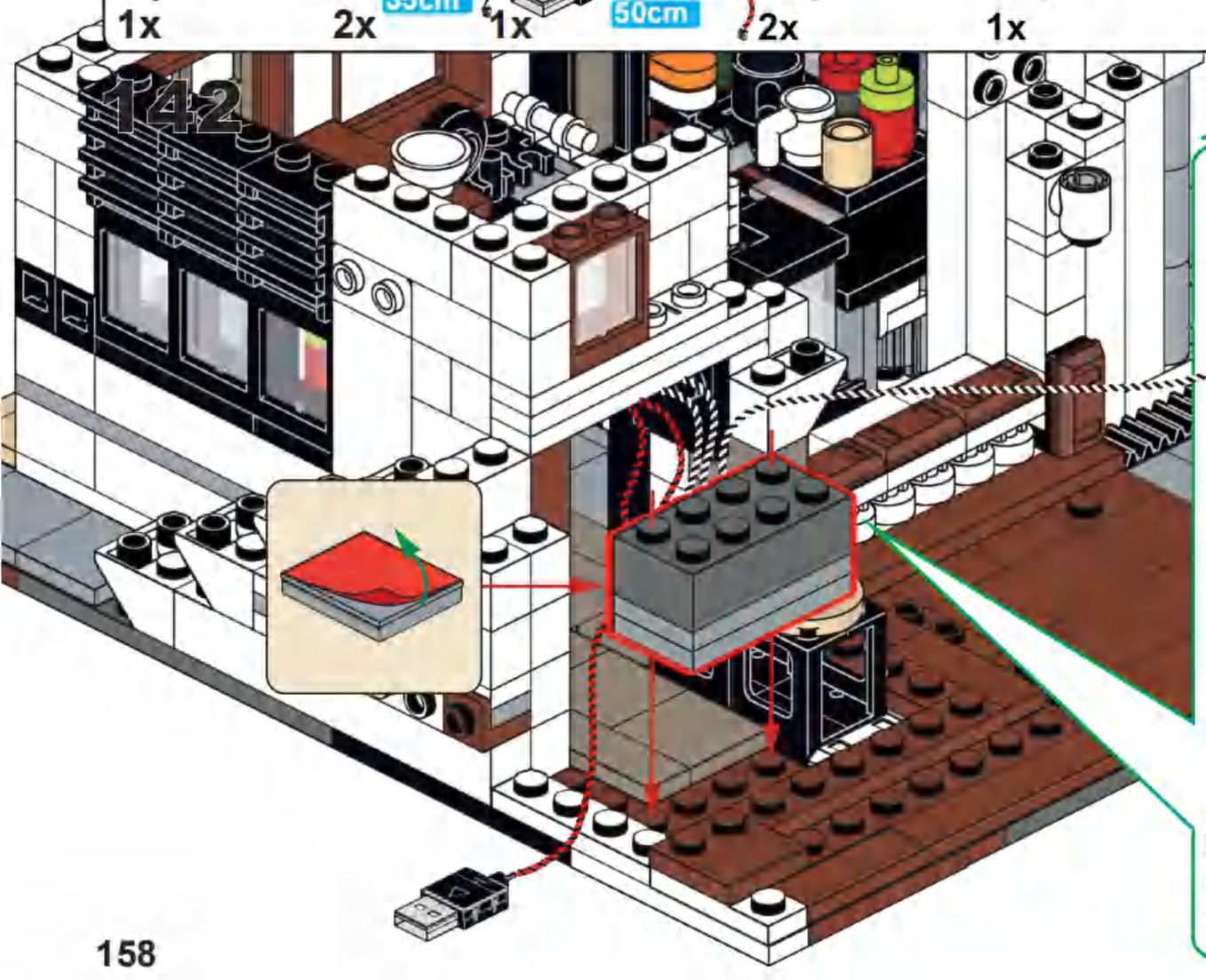
142

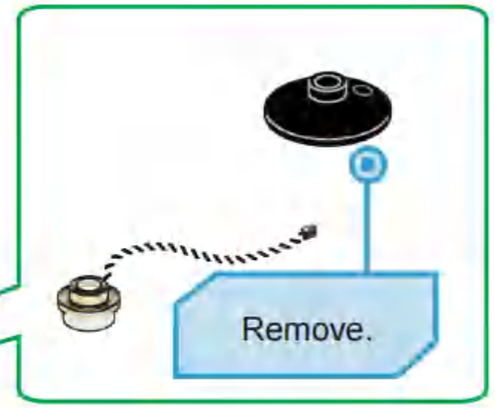
Remove.

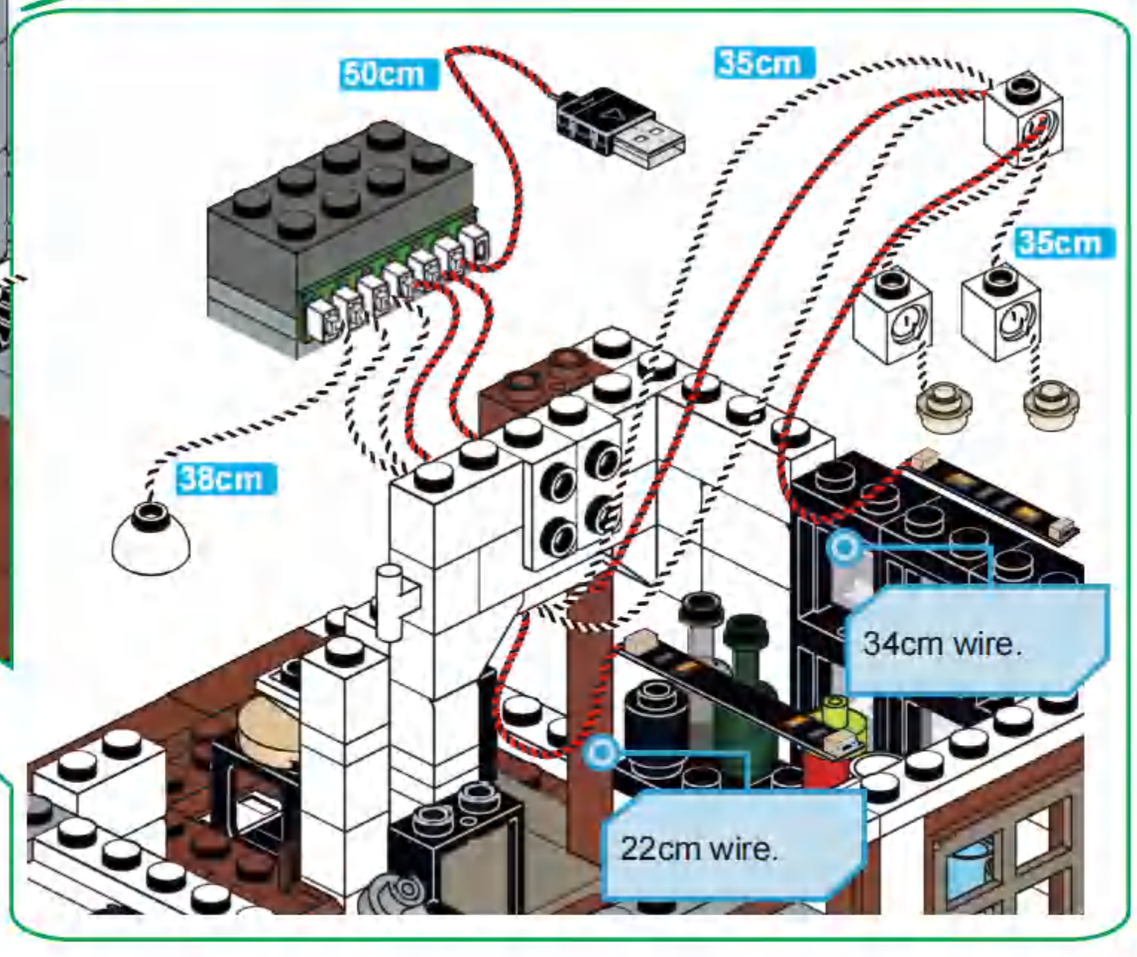
50cm
35cm
35cm
38cm
34cm wire.
22cm wire.

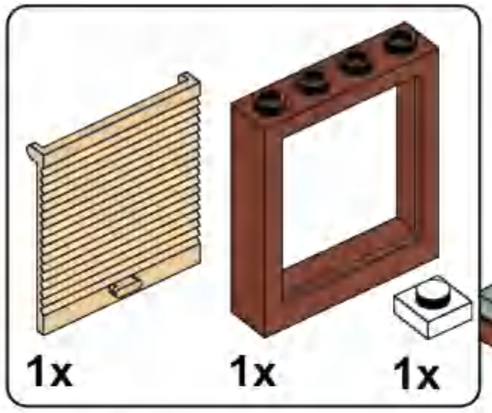

143

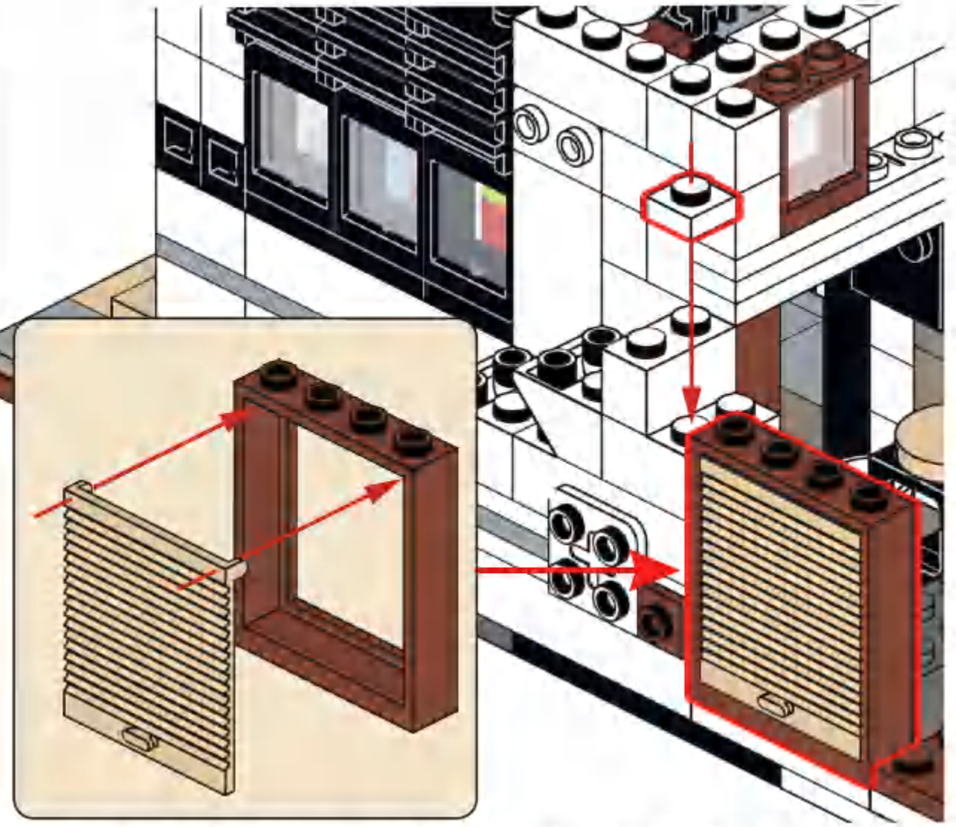

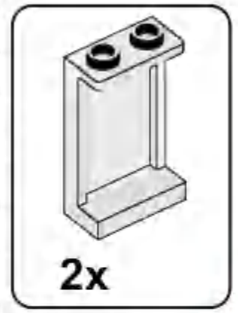

144

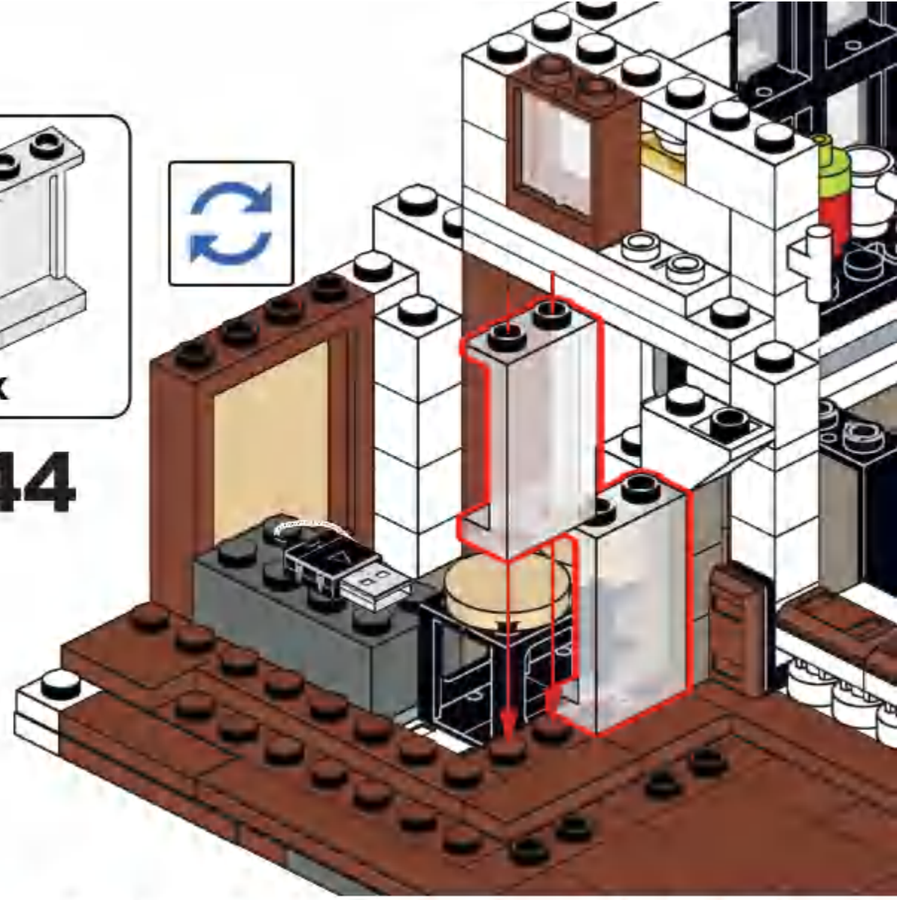

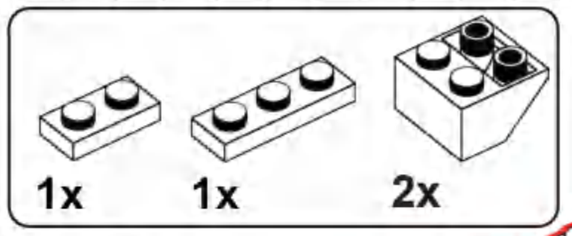

145

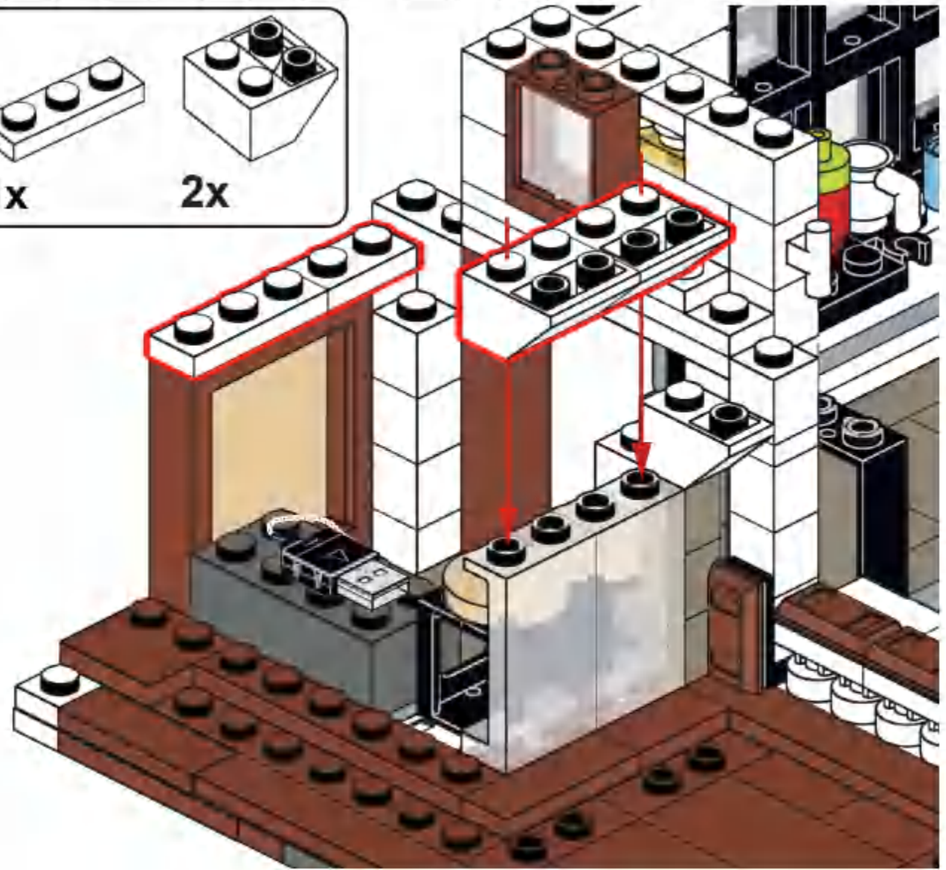

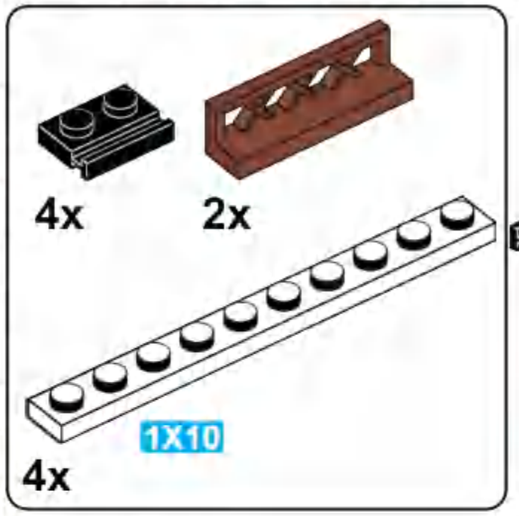

146

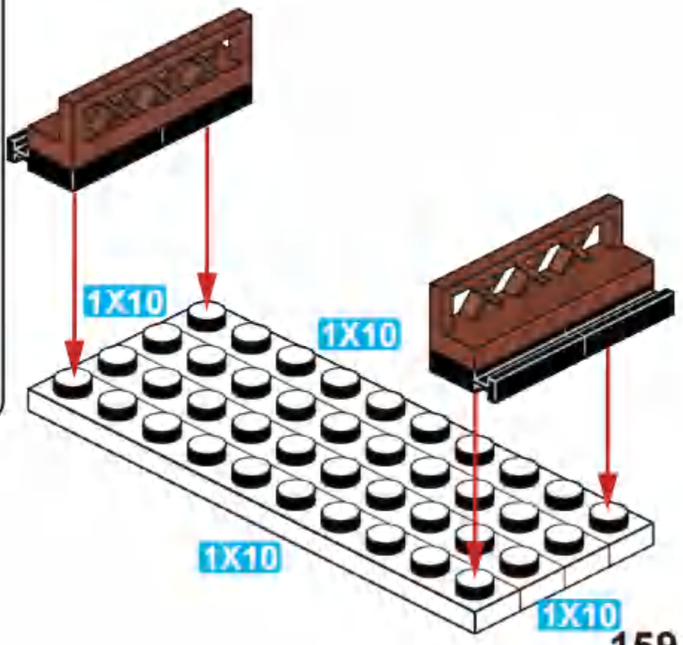

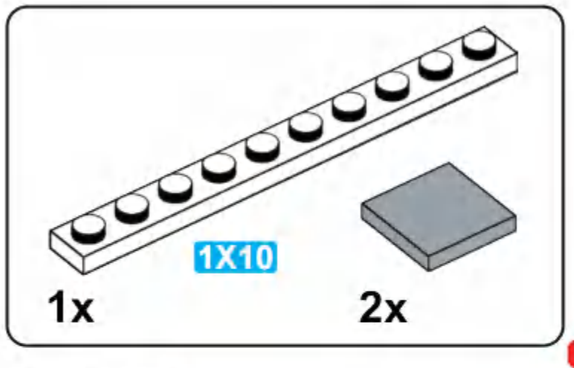

147

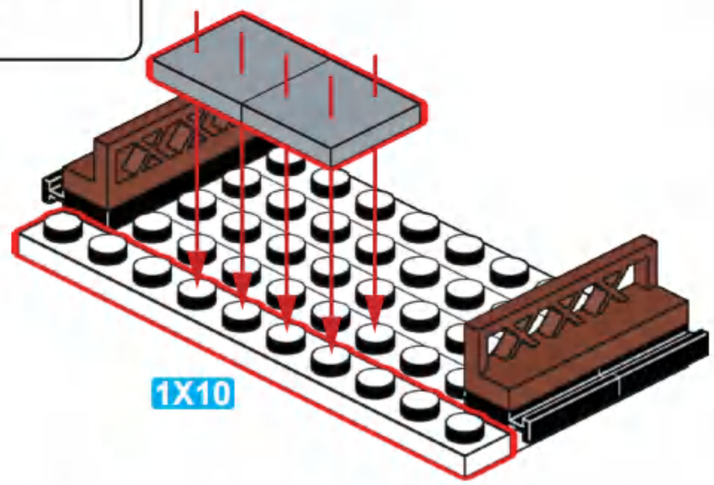

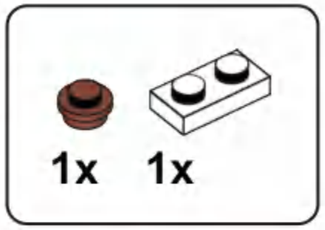

148

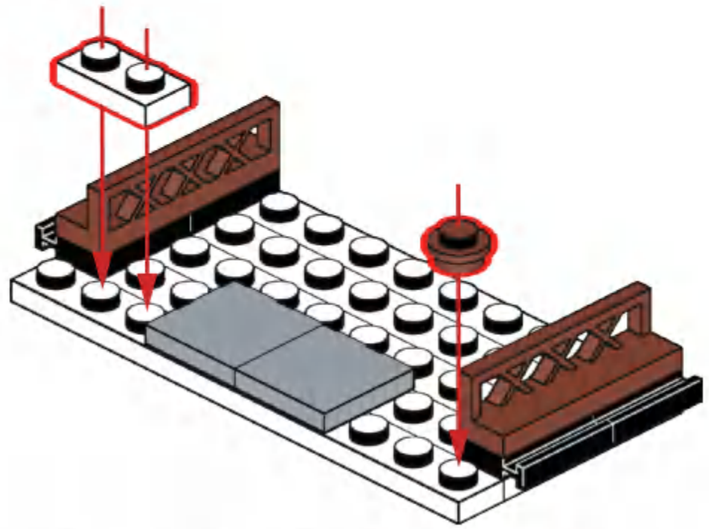

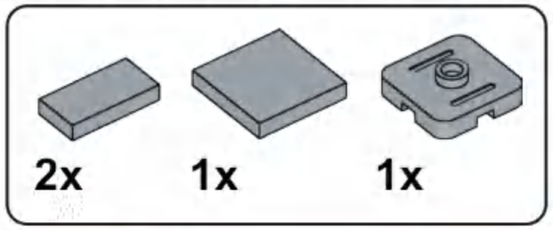

149

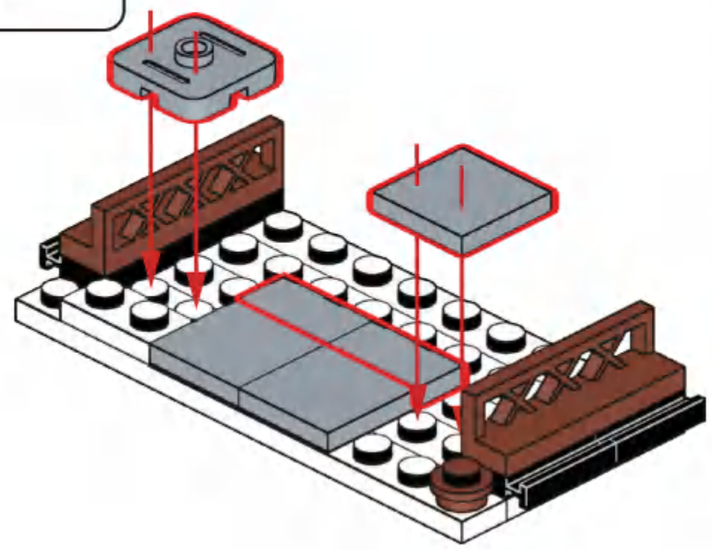

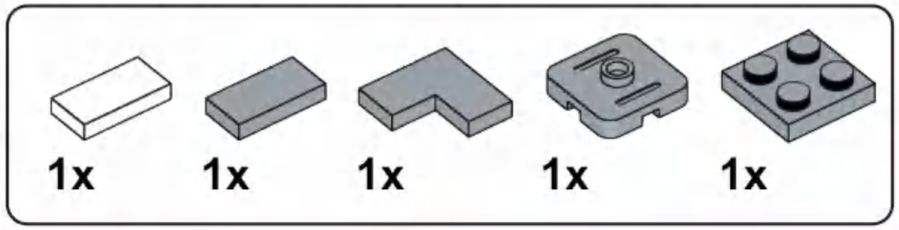

150

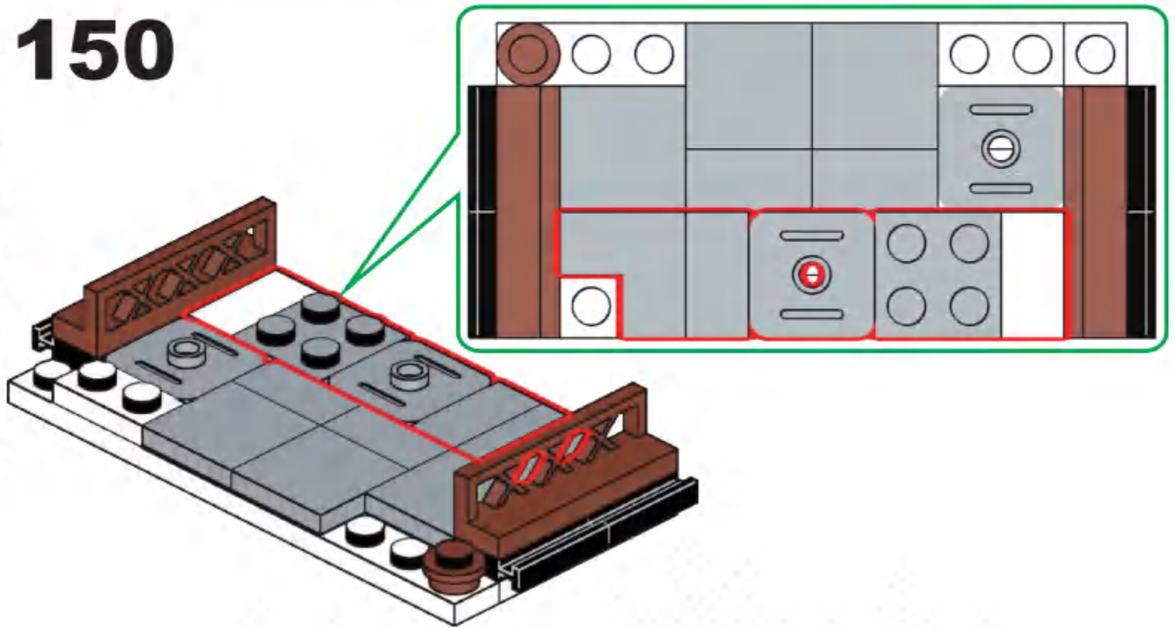

151

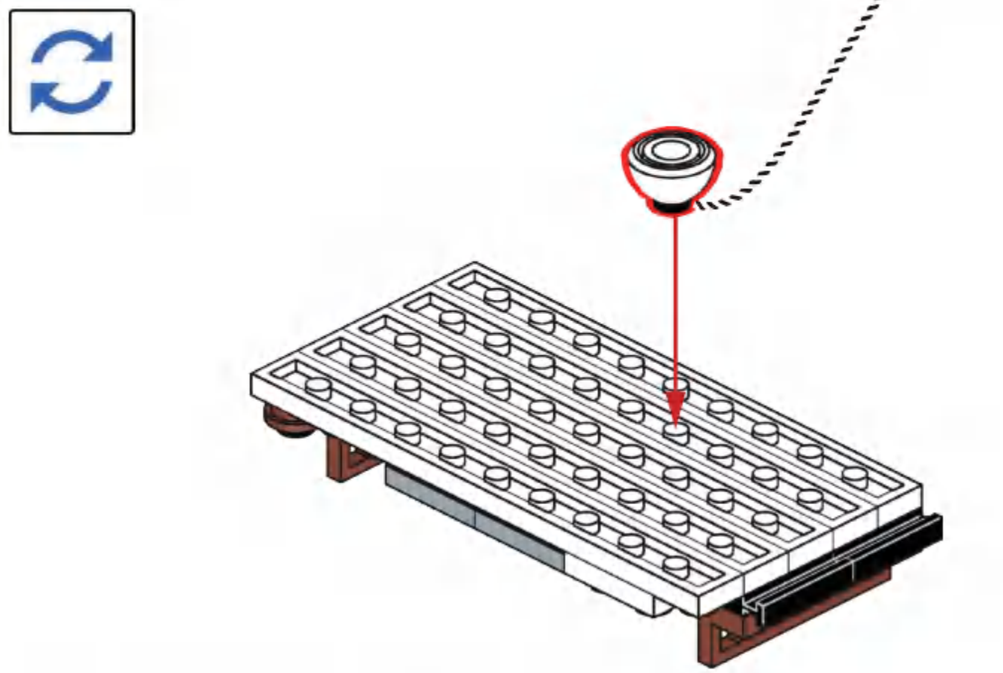

152

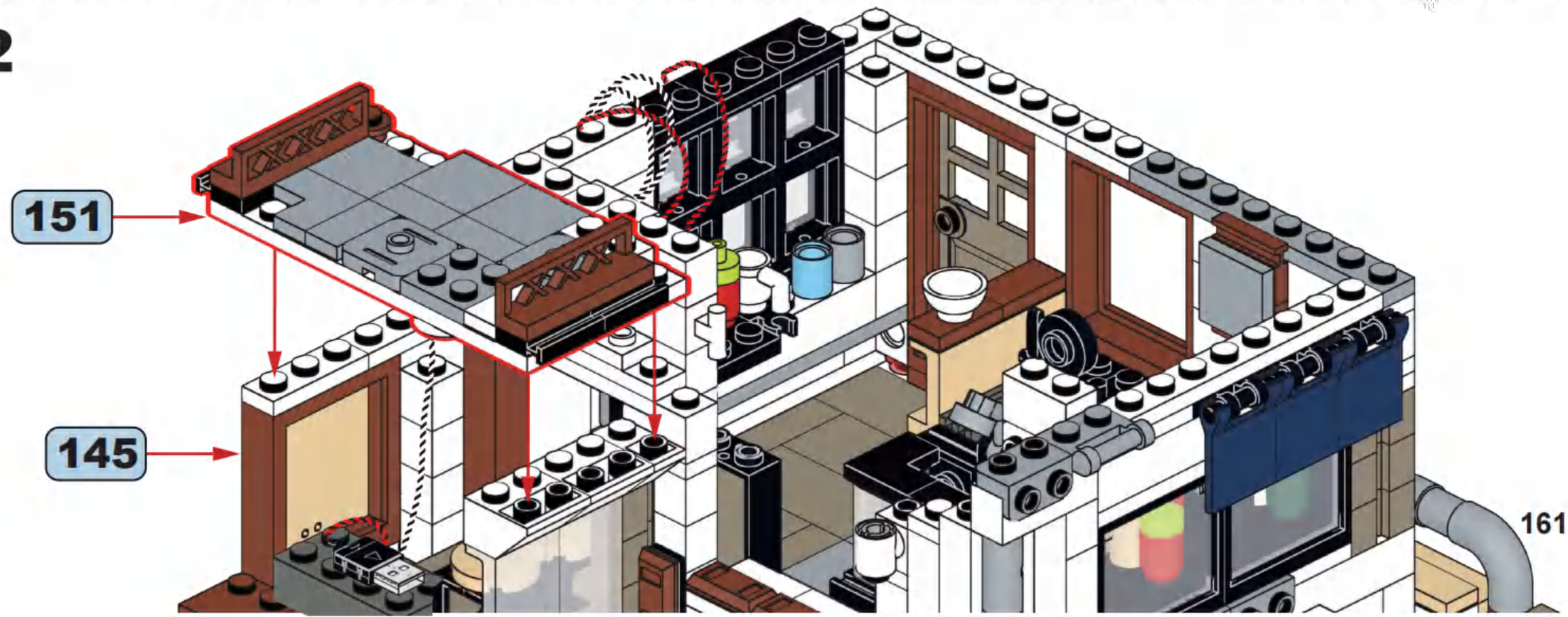

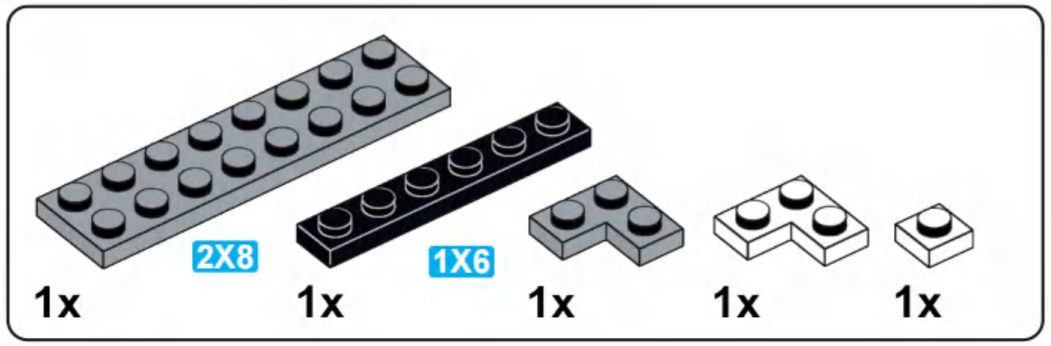

153

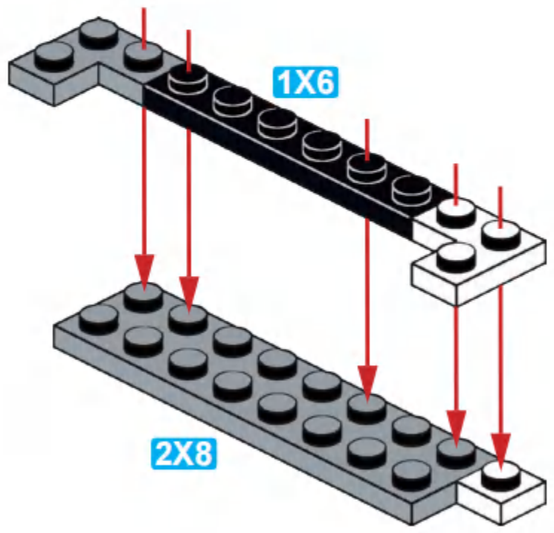

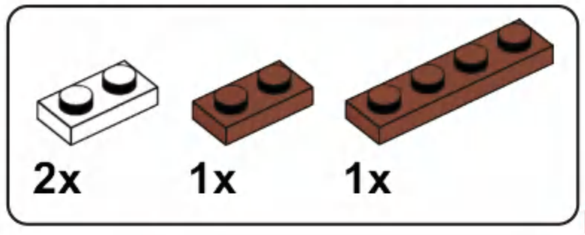

154

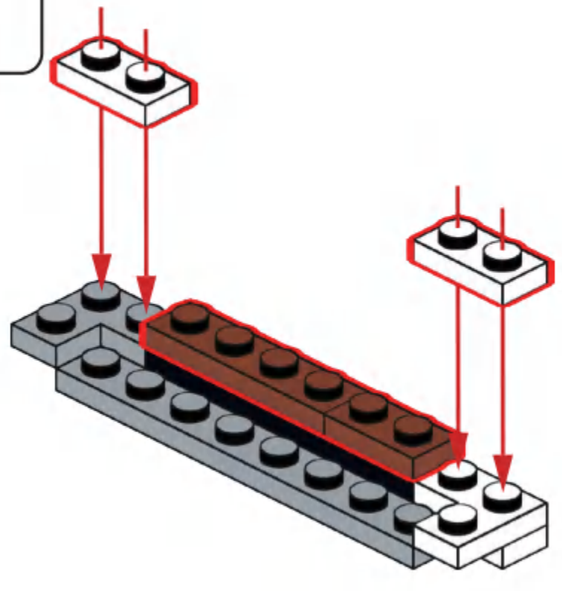

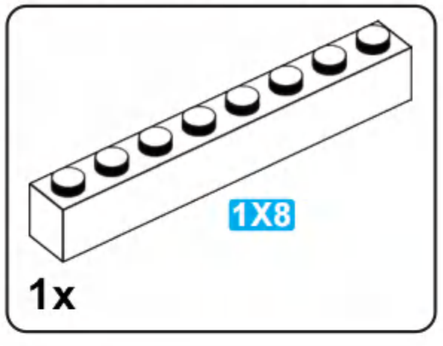

155

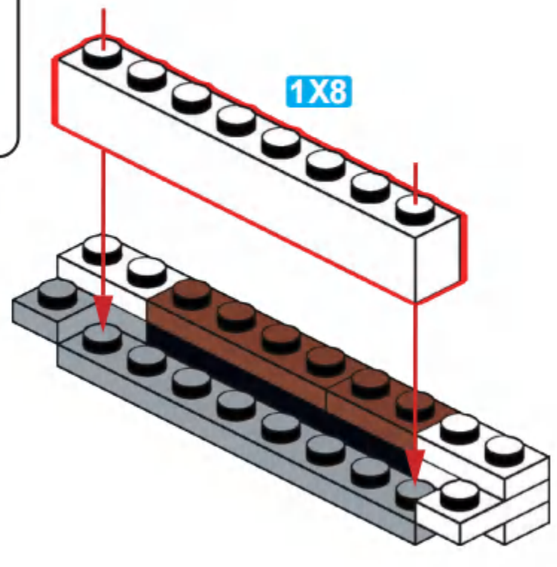

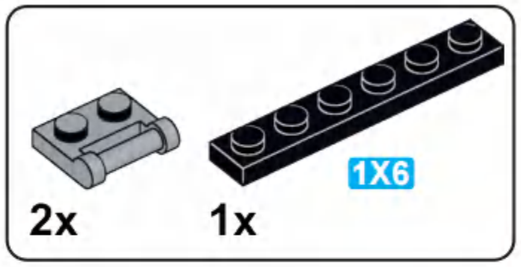

156

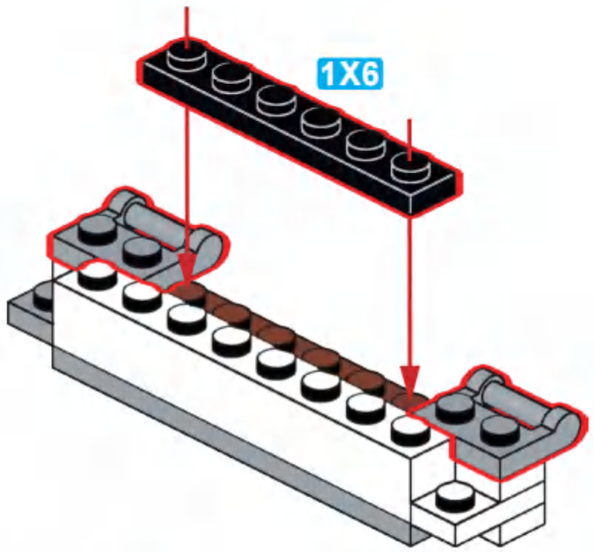

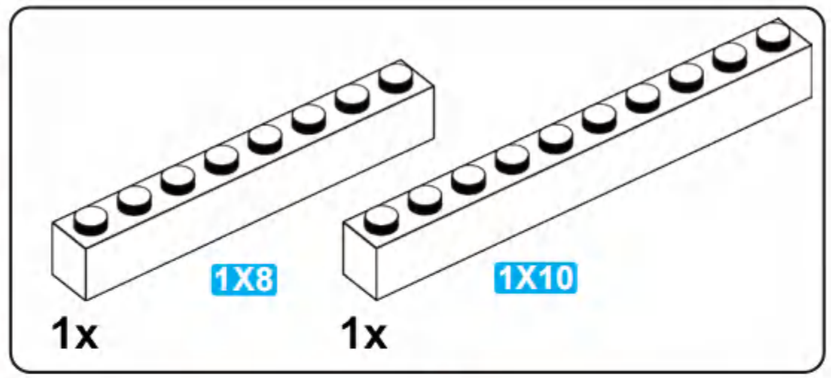

157

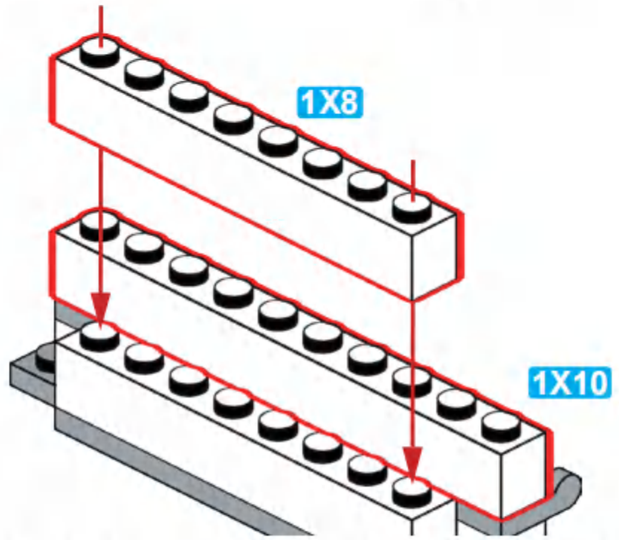

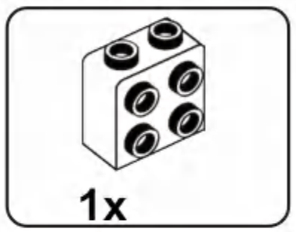

158

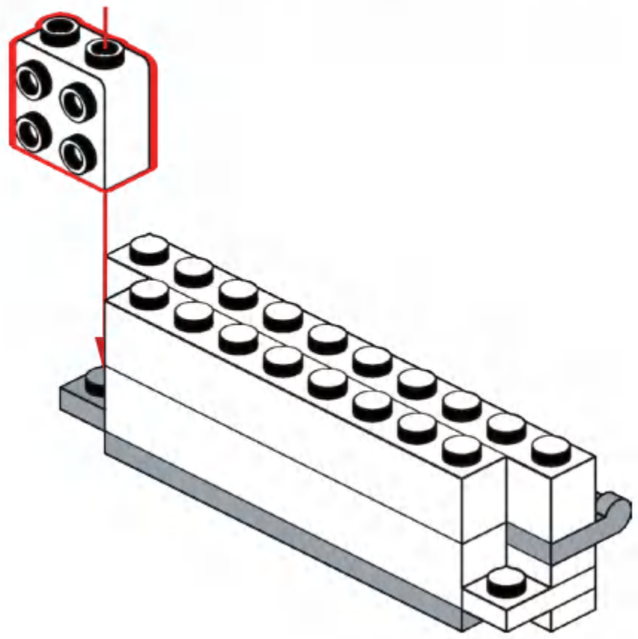

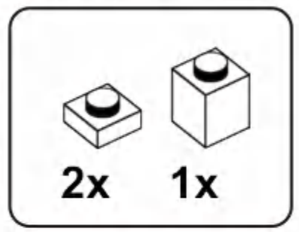

159

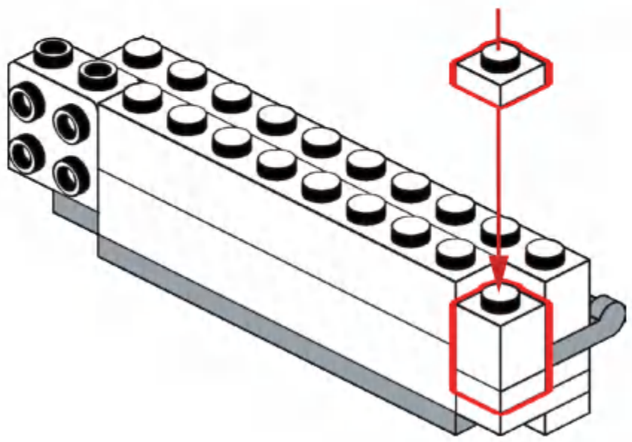

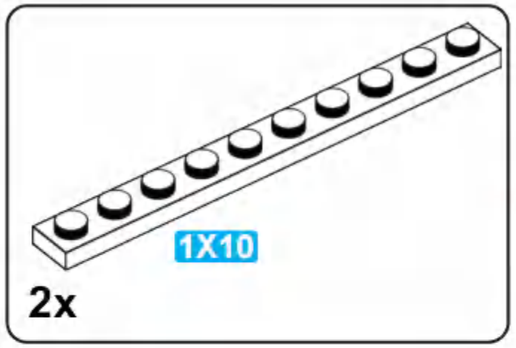

160

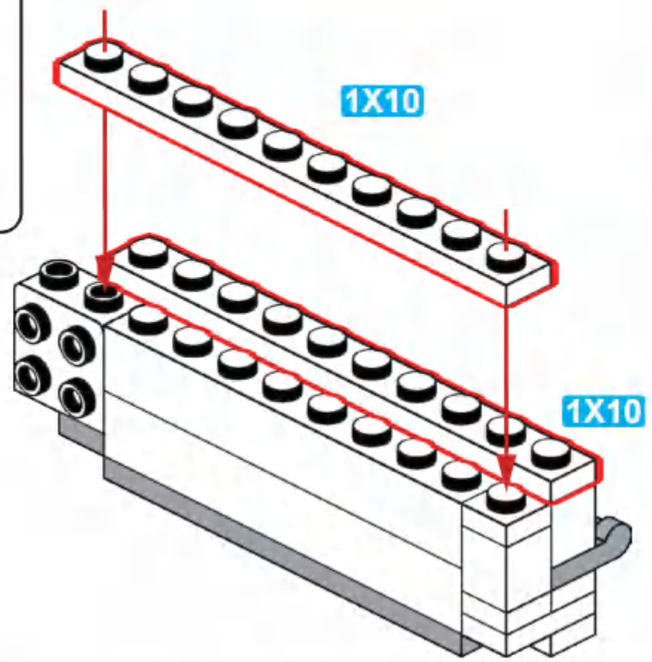

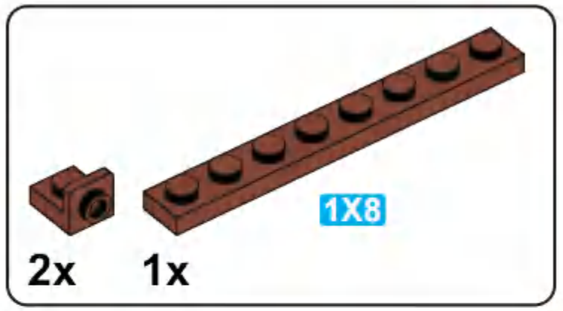

161

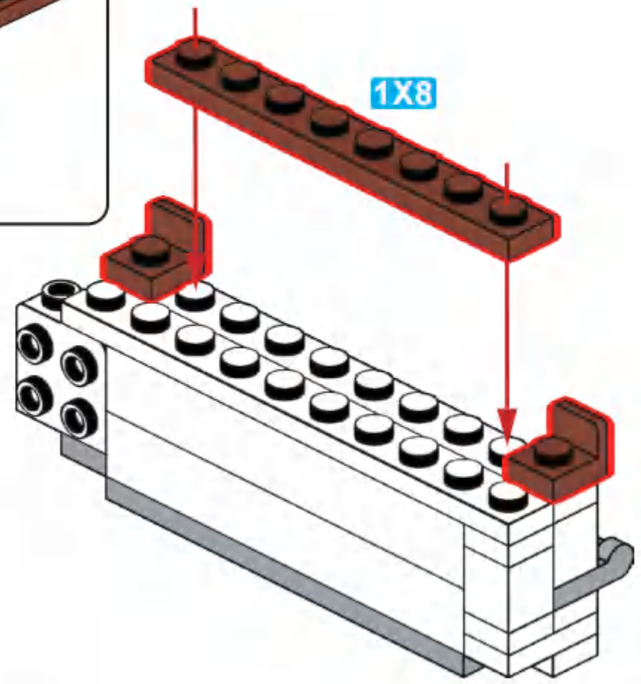

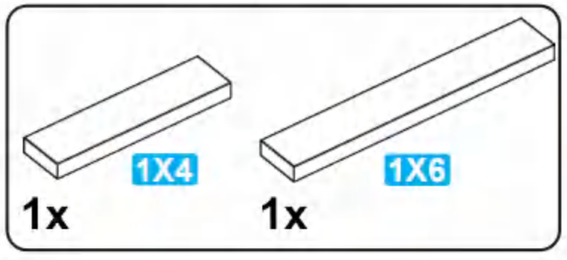

162

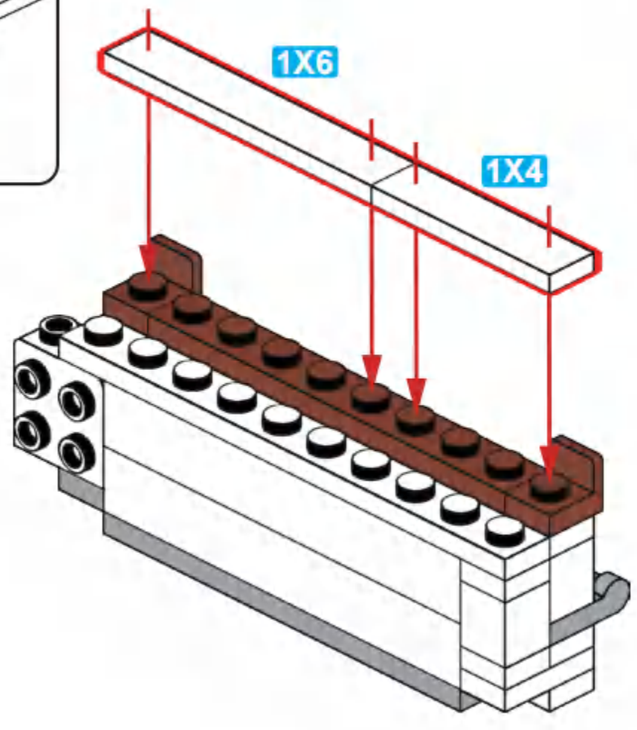

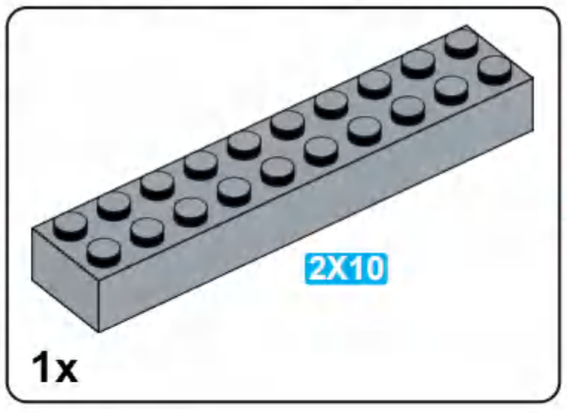

163

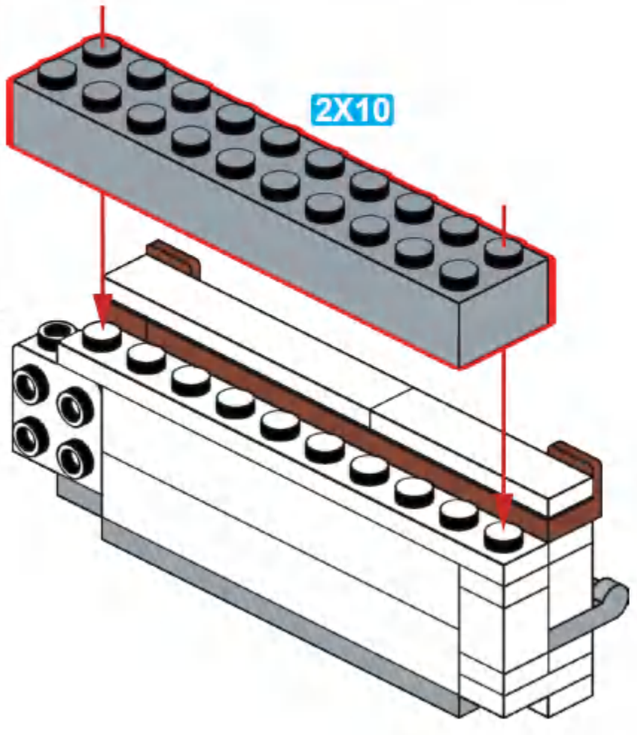

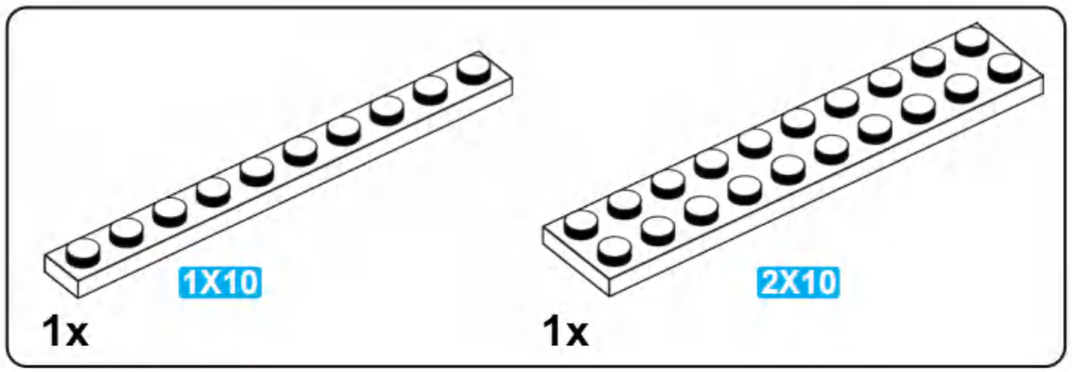

164

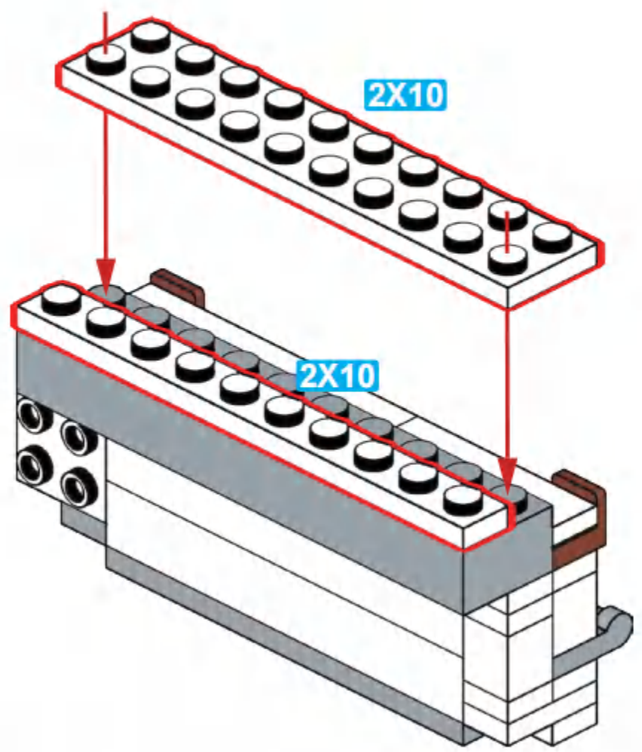

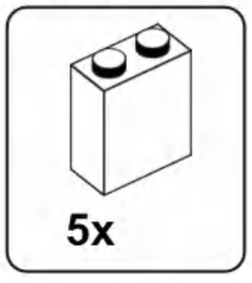

165

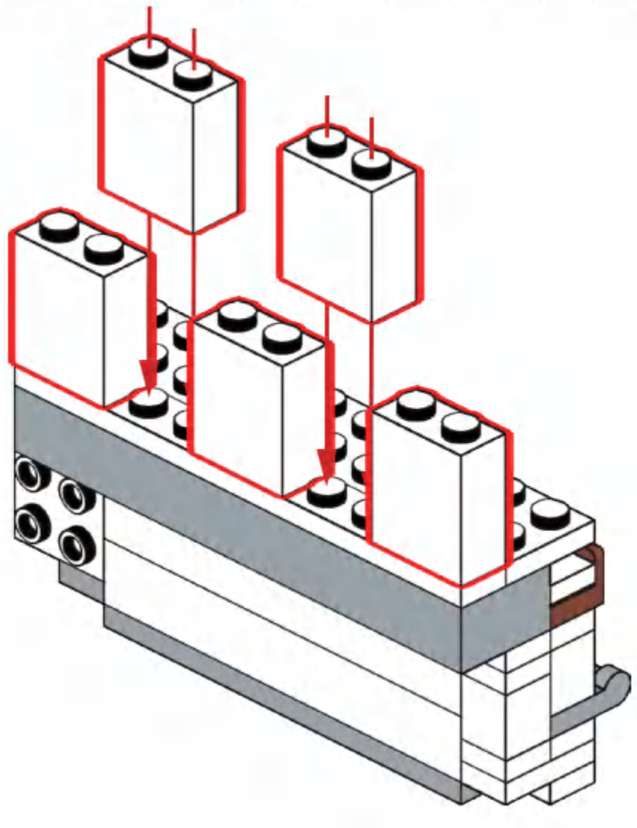

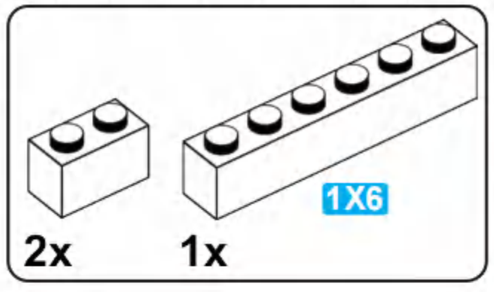

166

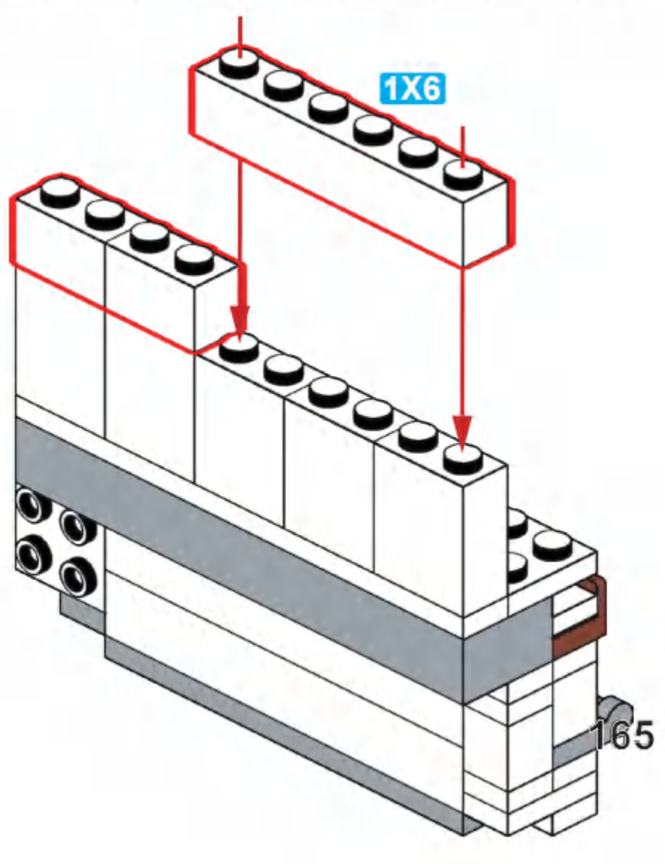

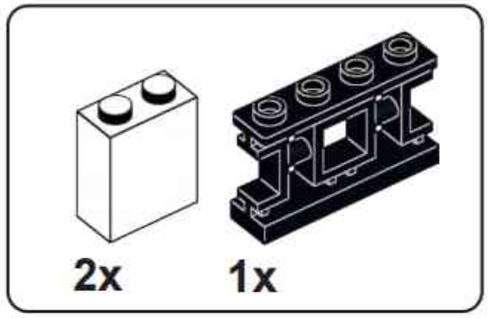

167

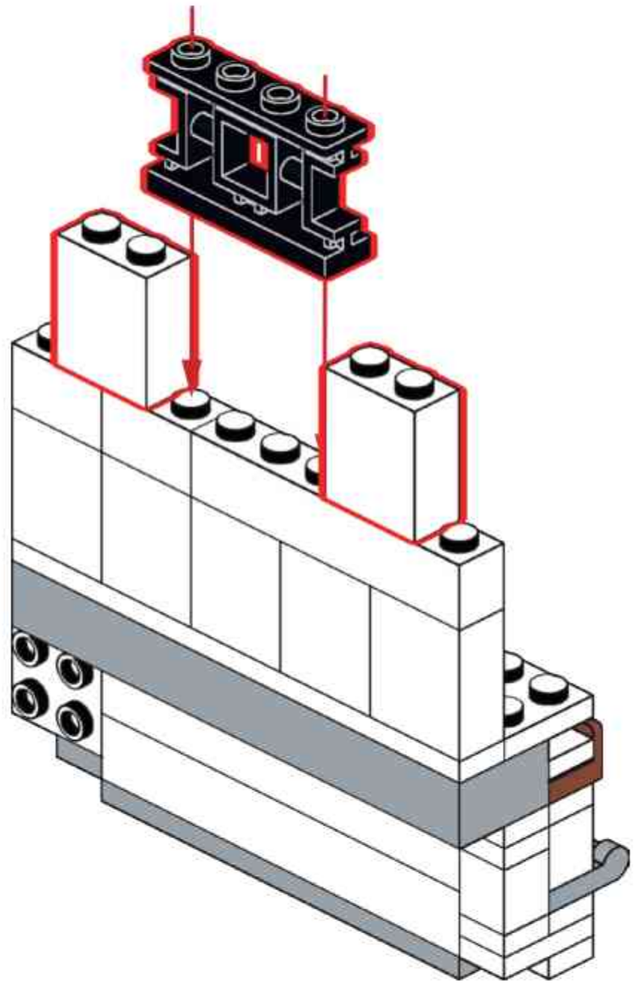

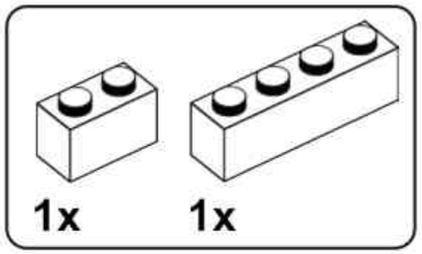

168

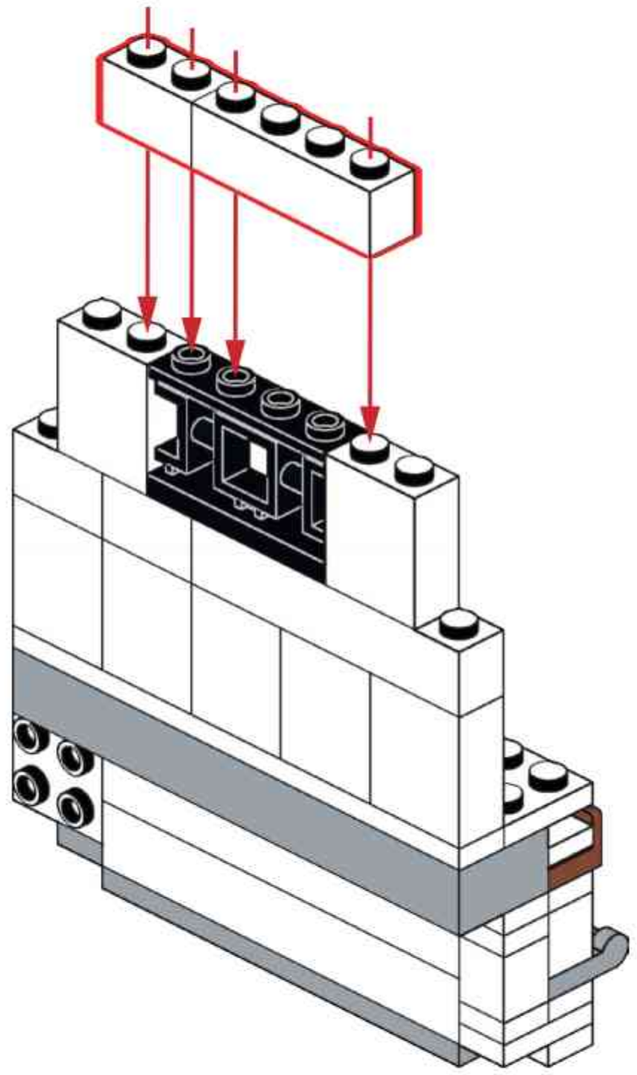

169

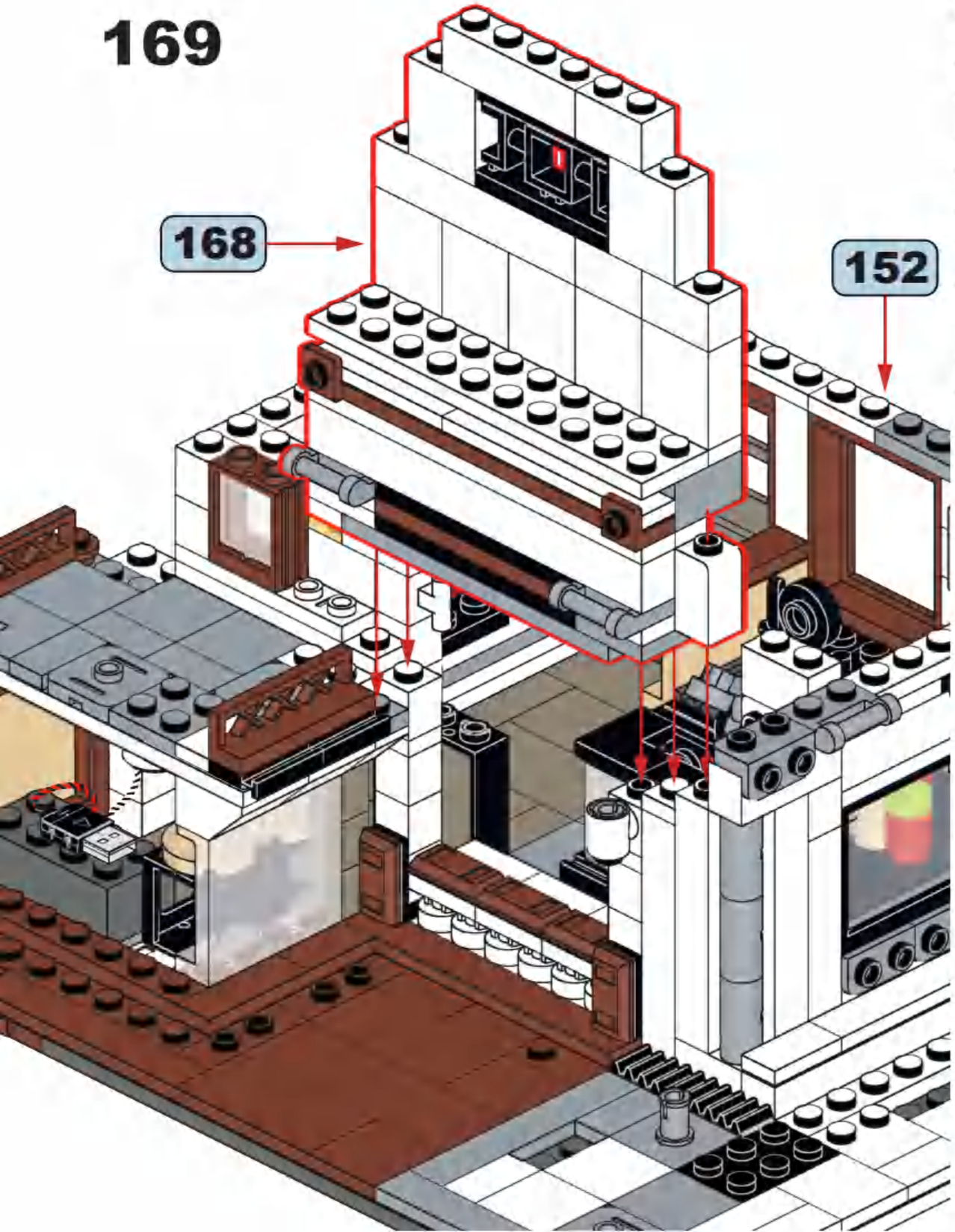

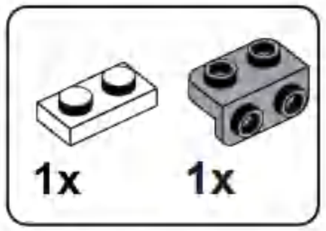

170

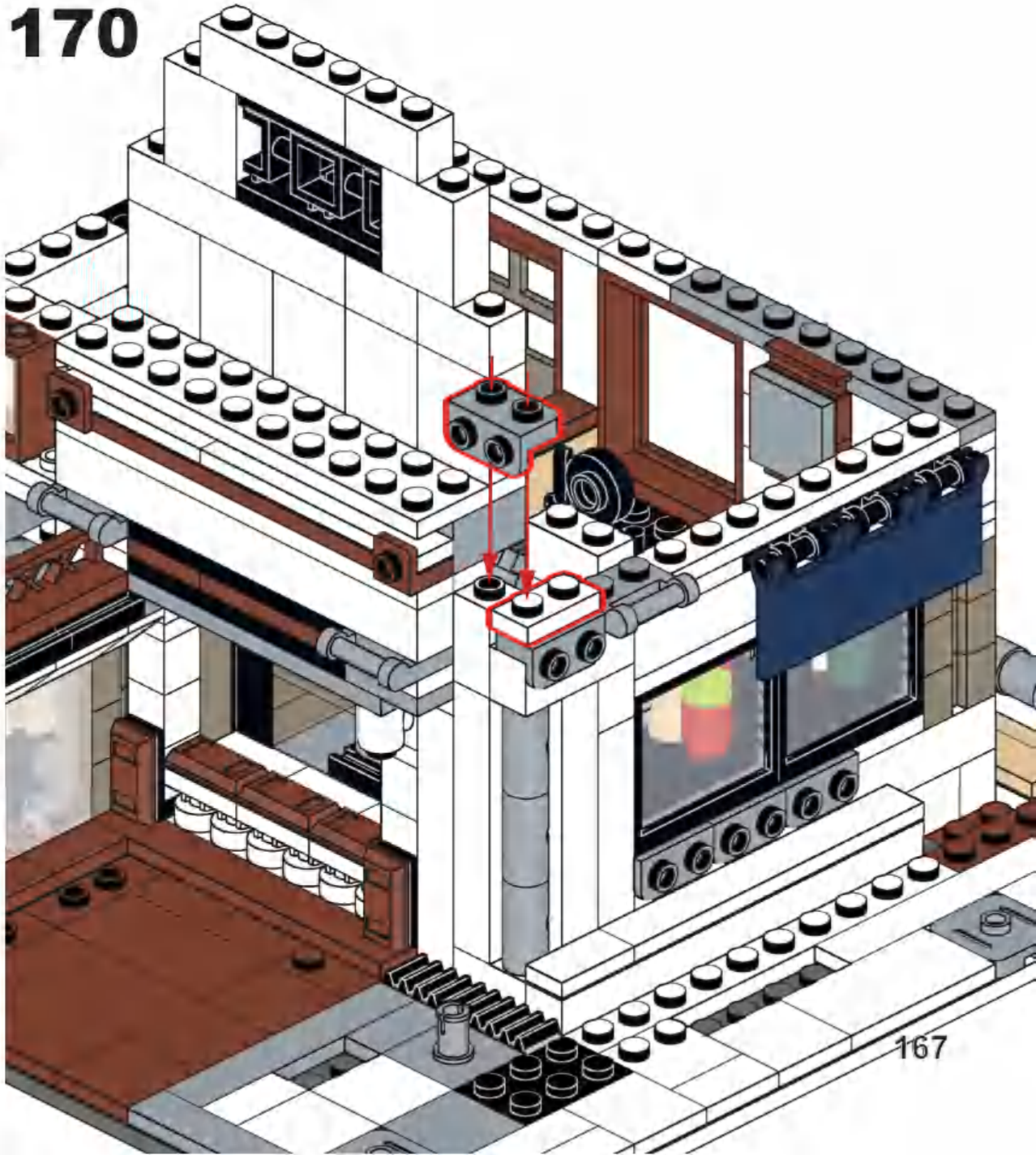

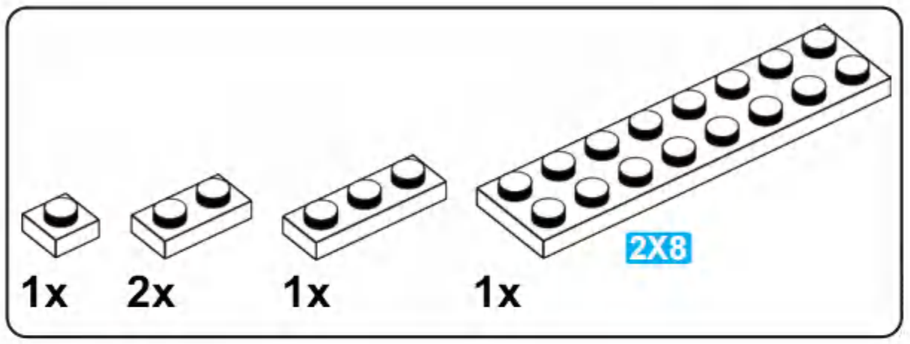
1x
2x
1x
1x
2X8

171

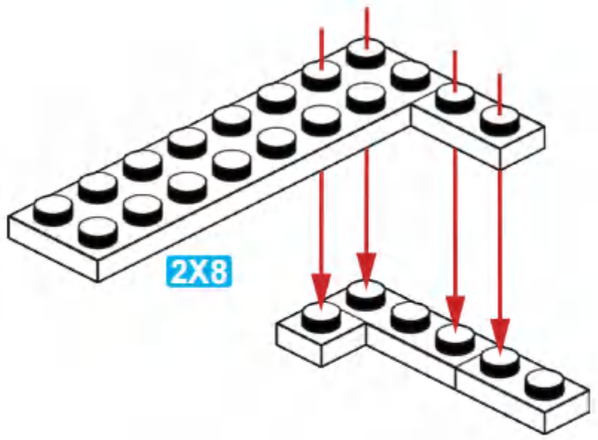
2X8

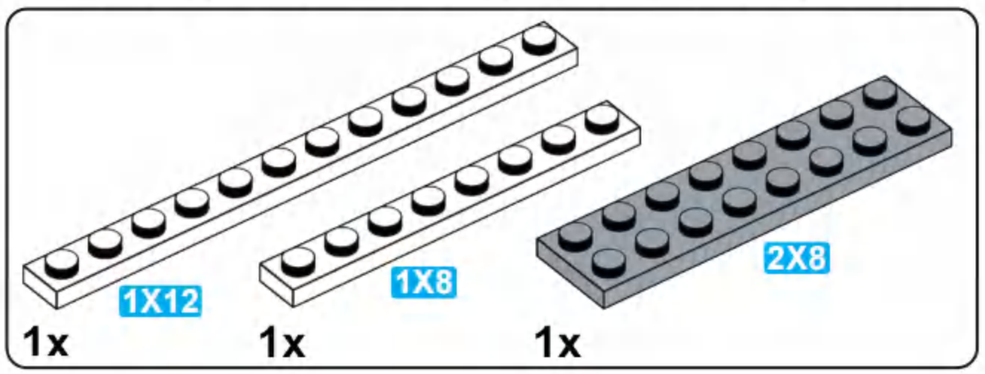
1X12
1X8
2X8
1x
1x
1x

172

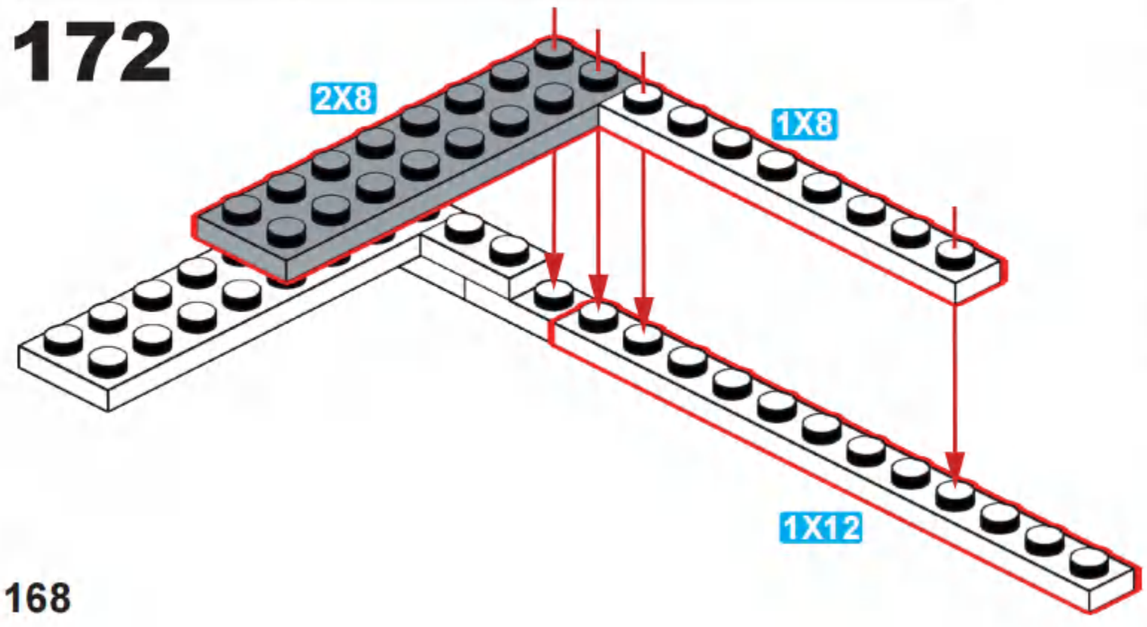
2X8
1X8
1X12

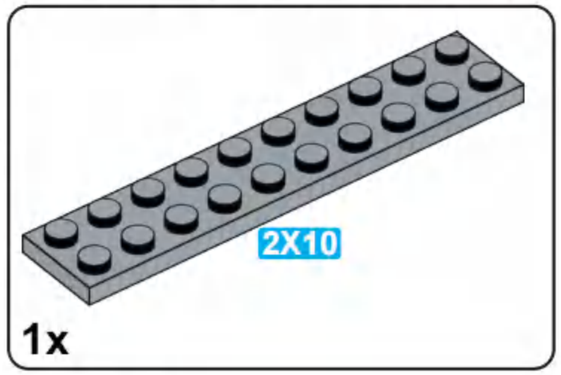
2X10
1x

173

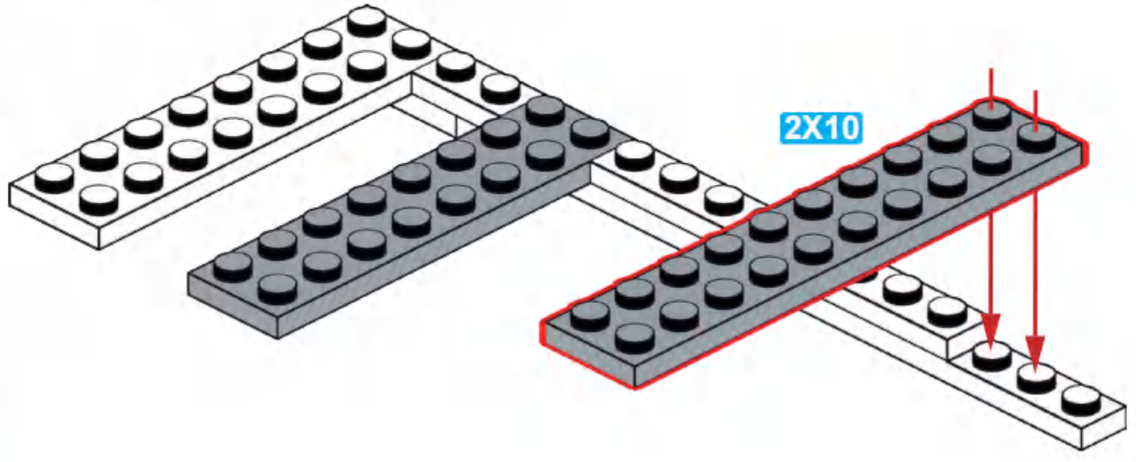
2X10

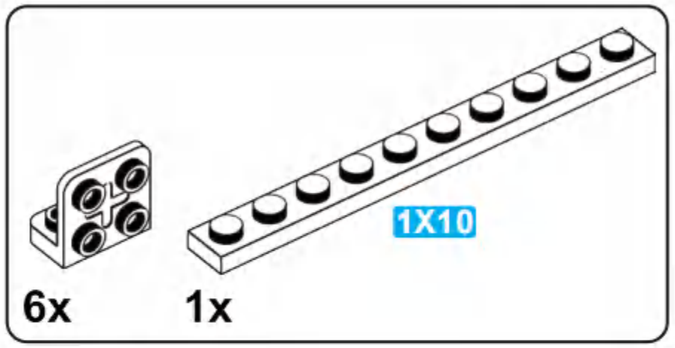

174

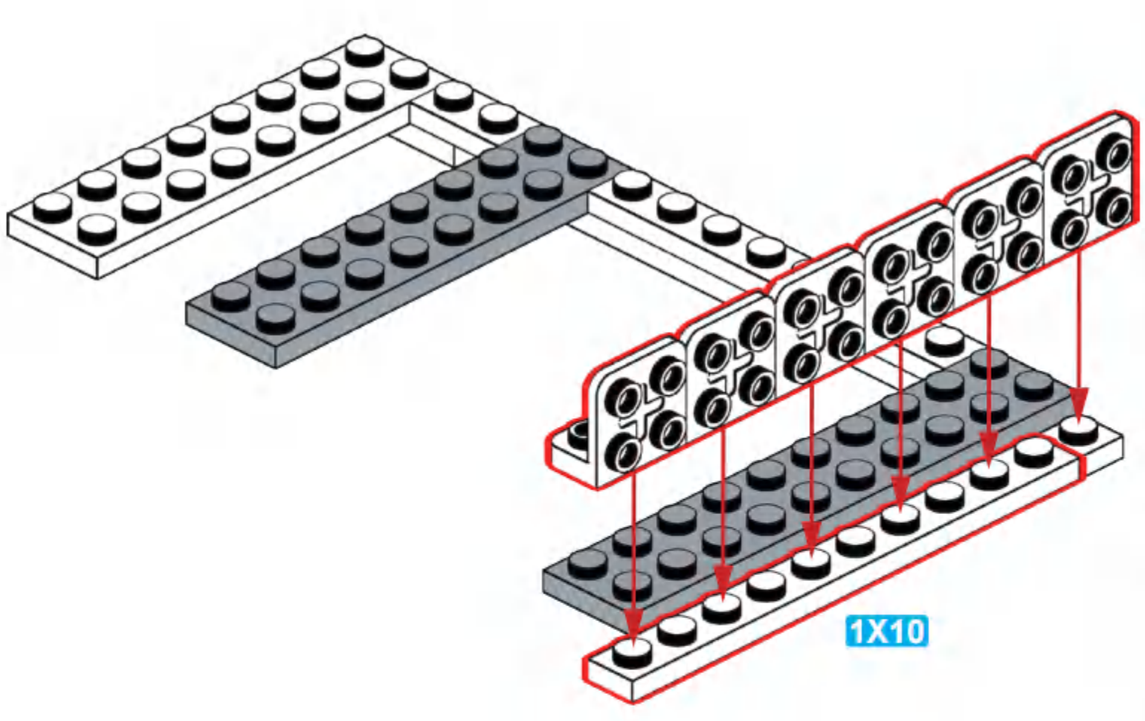

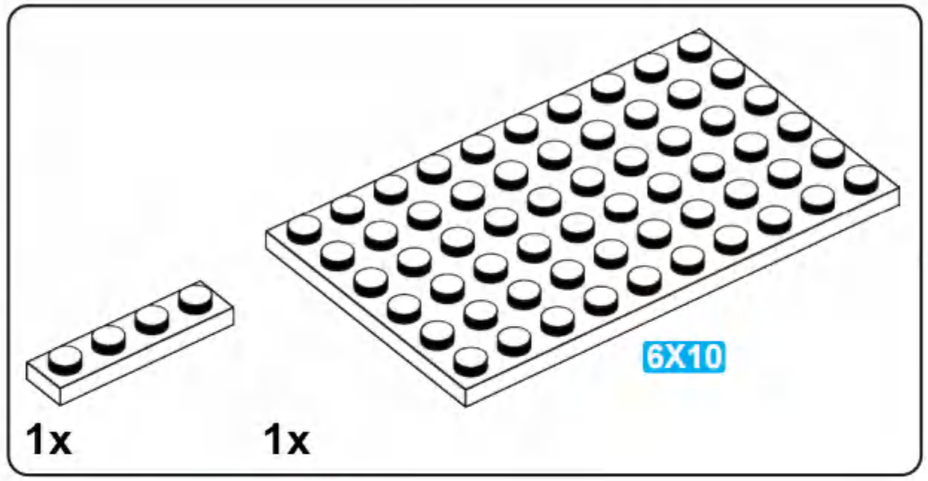

175

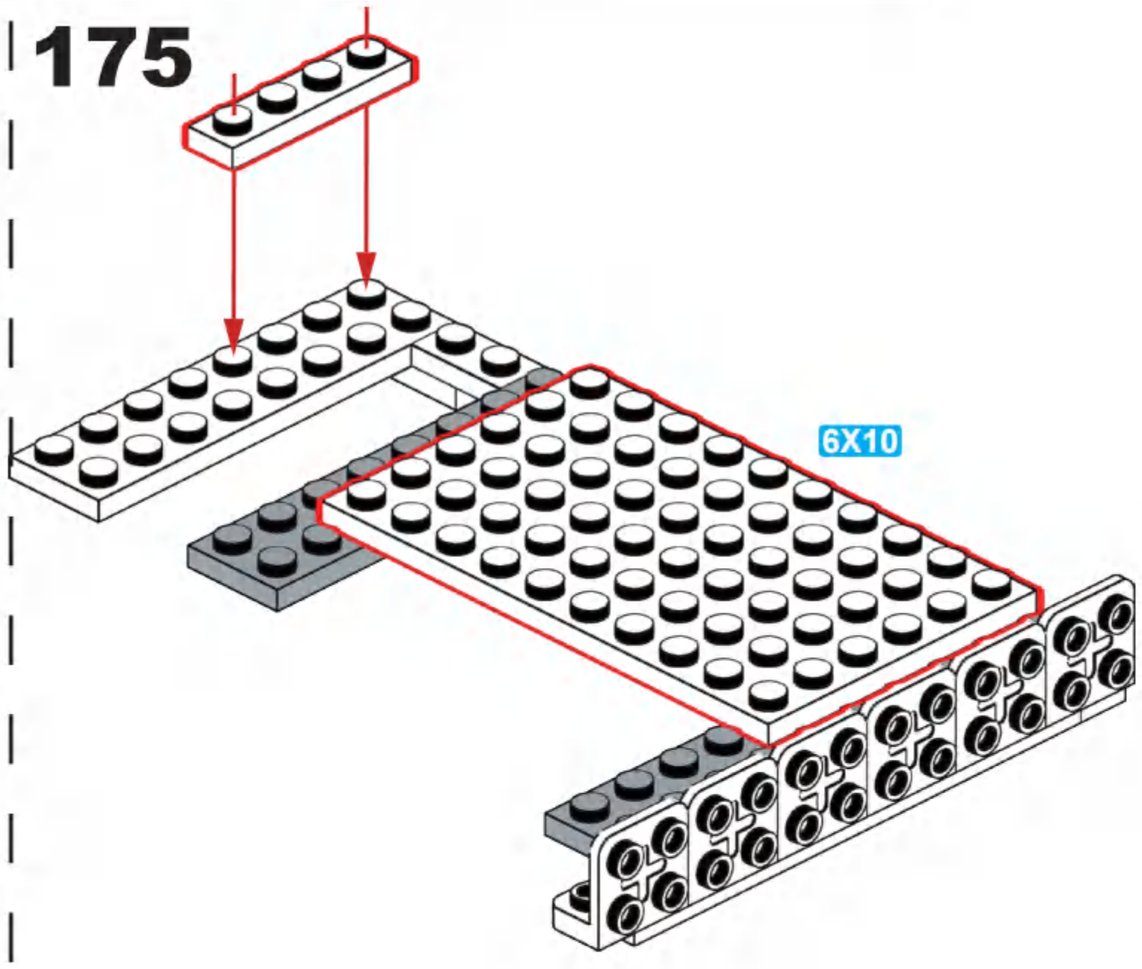

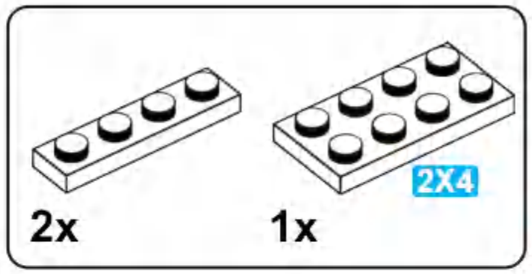

176

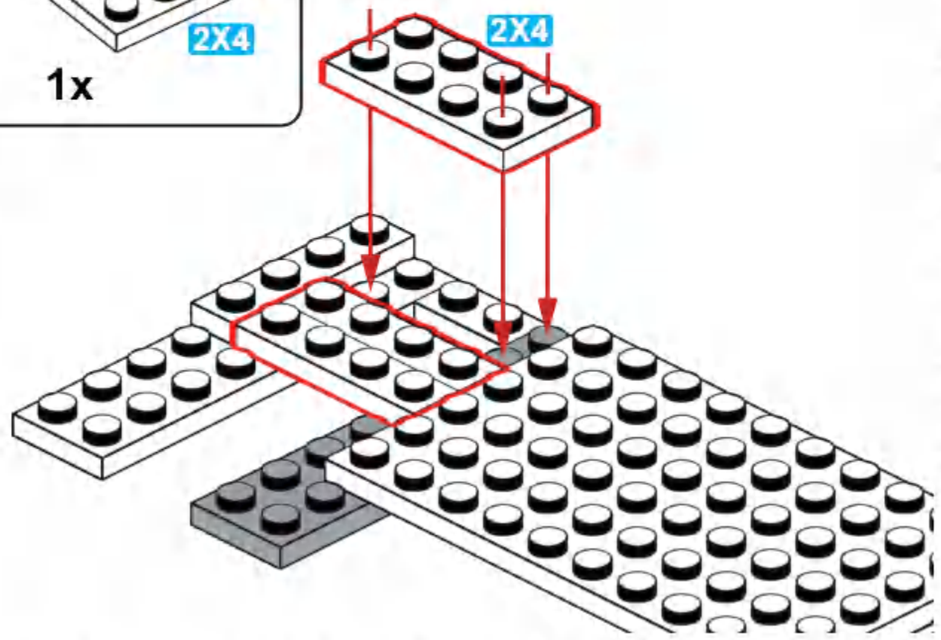

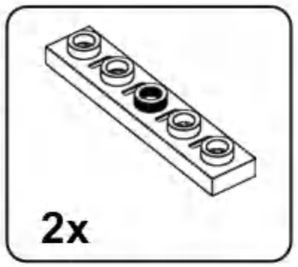

177

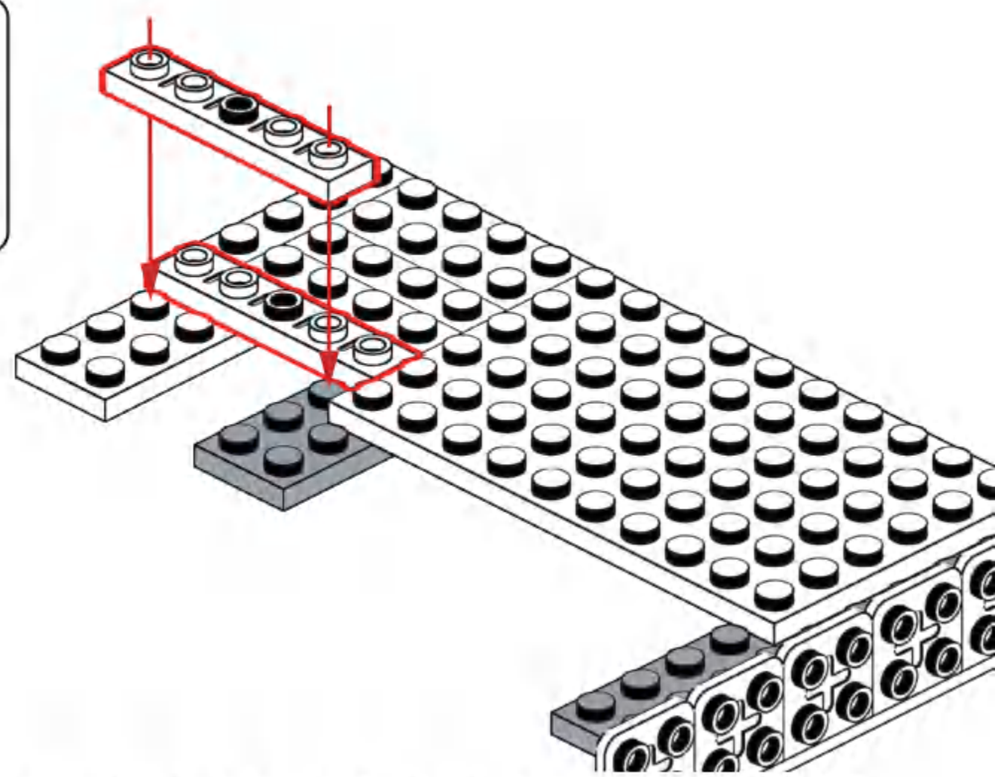

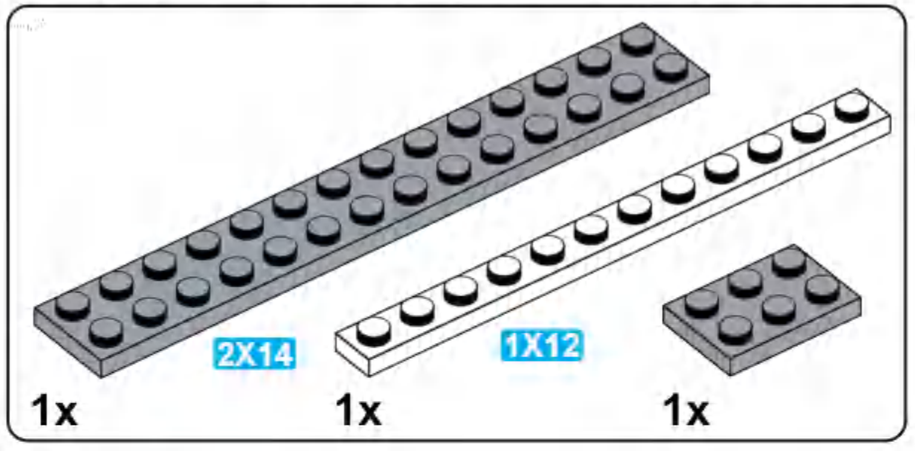

178

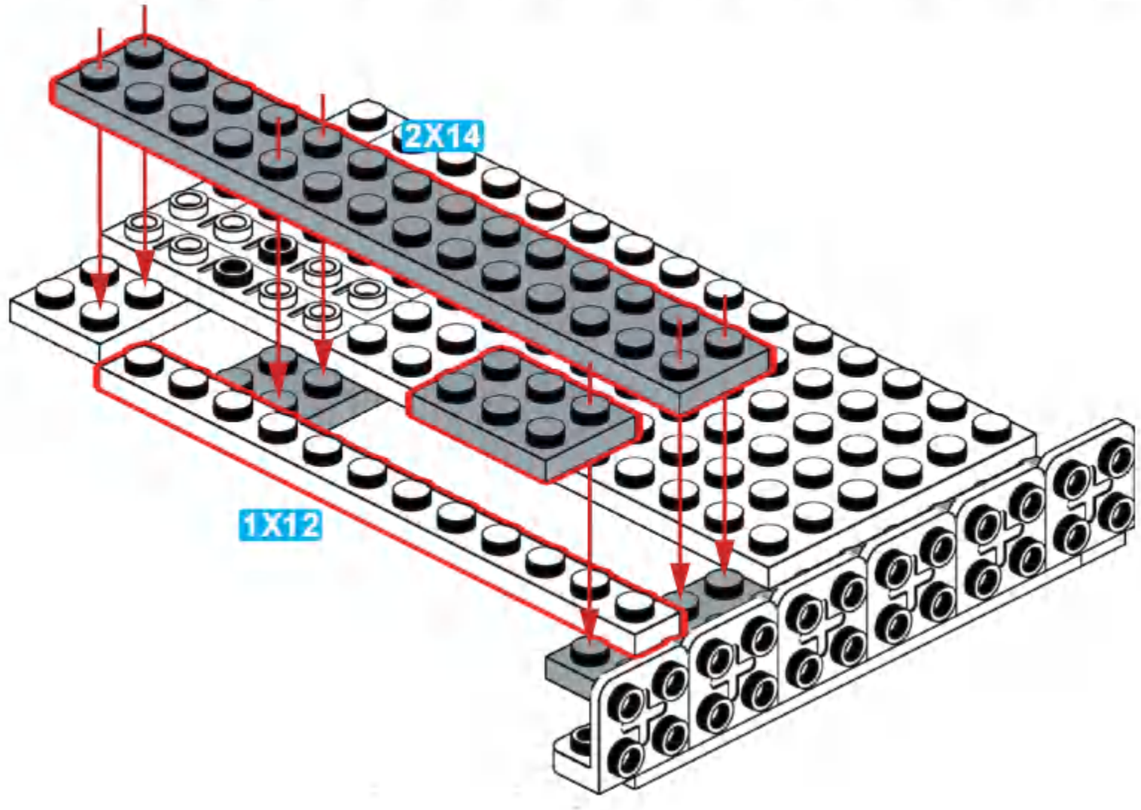

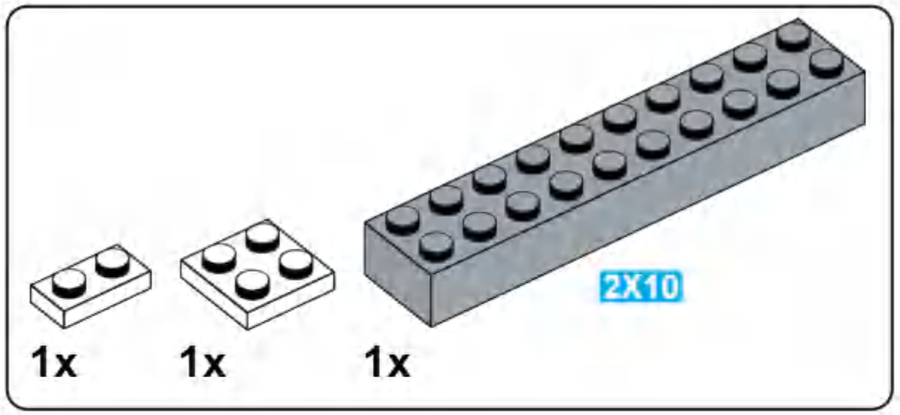

179

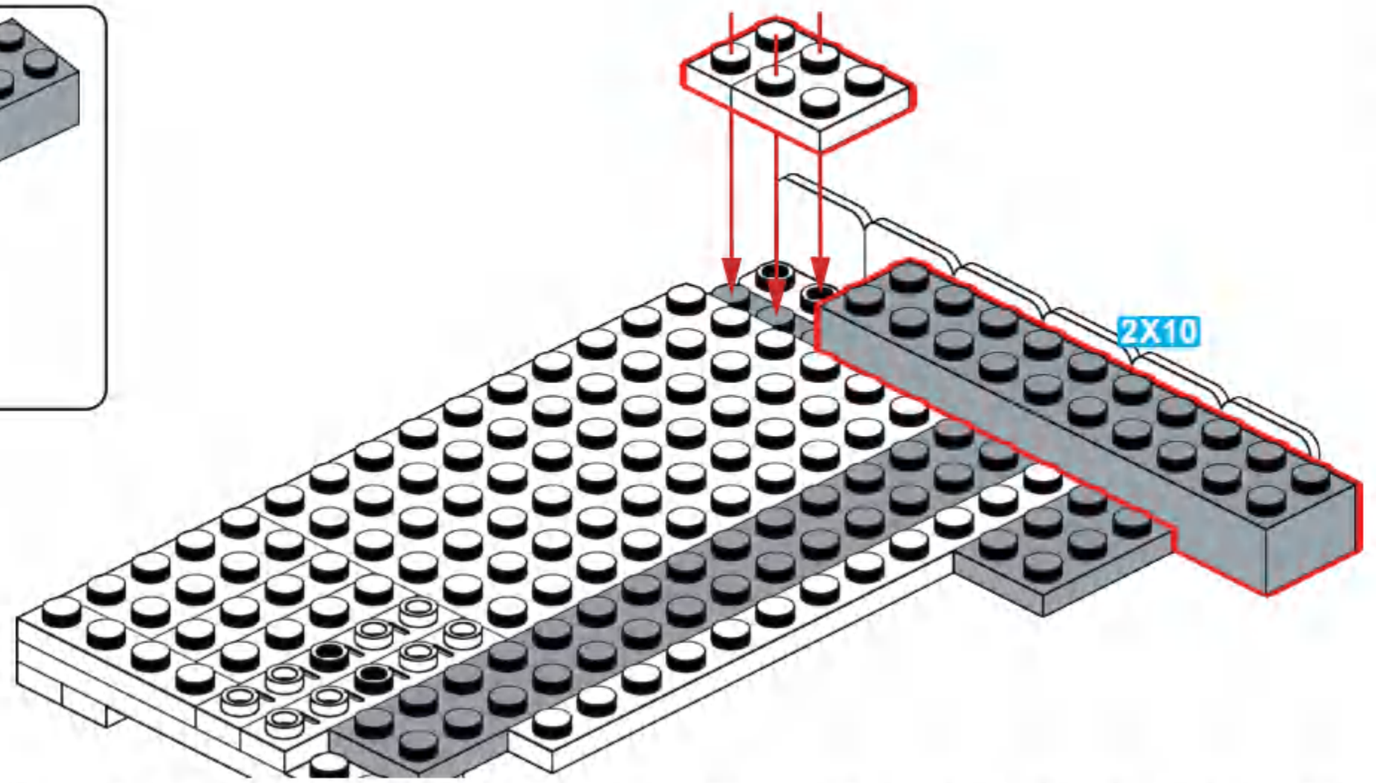

180

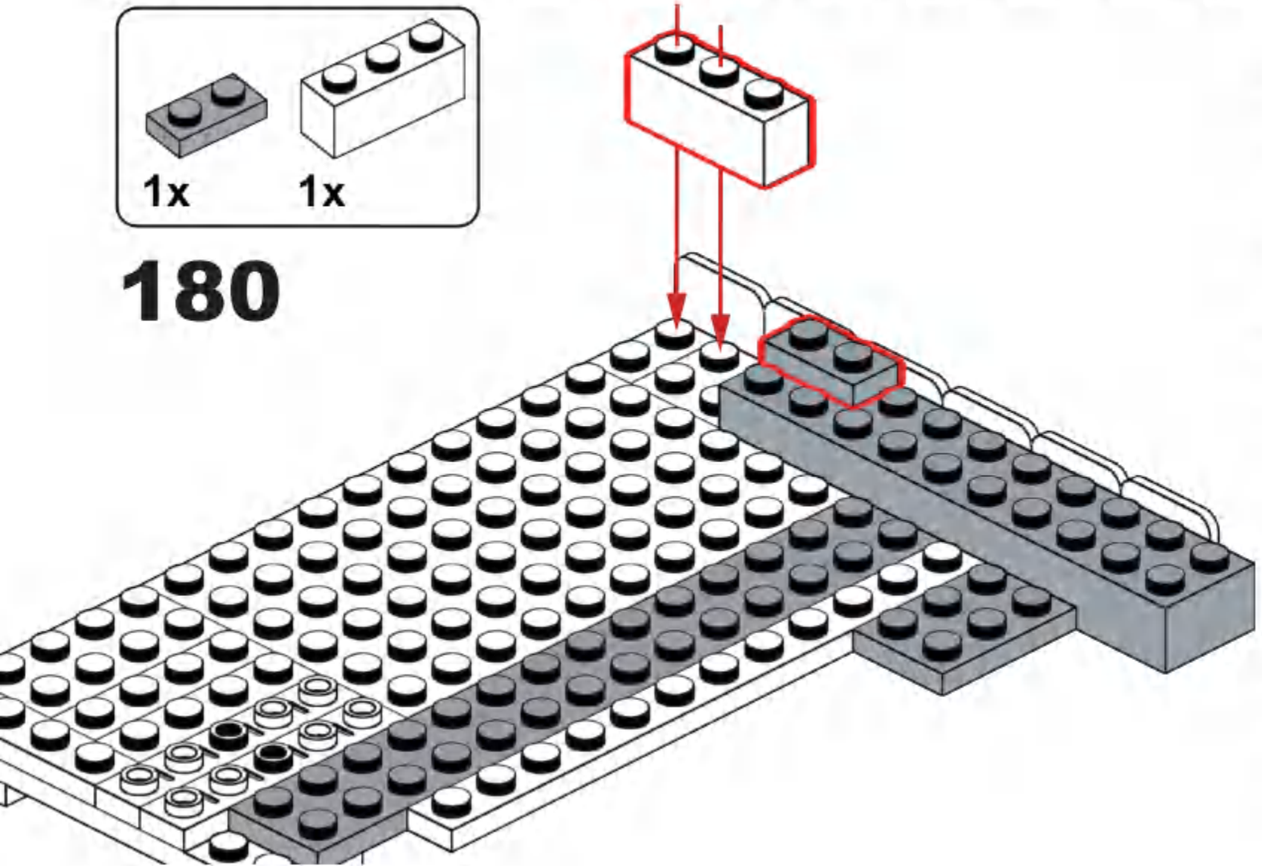

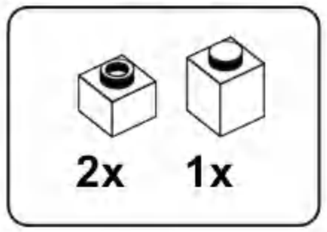

181

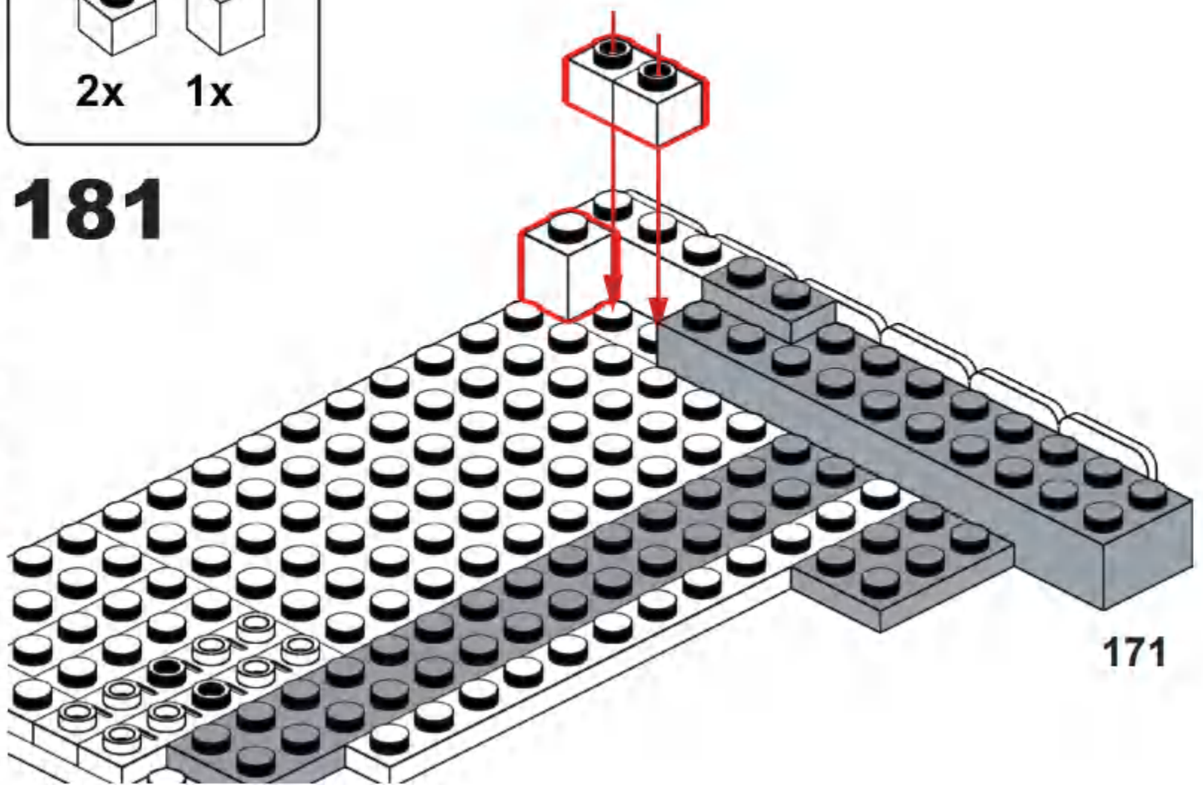

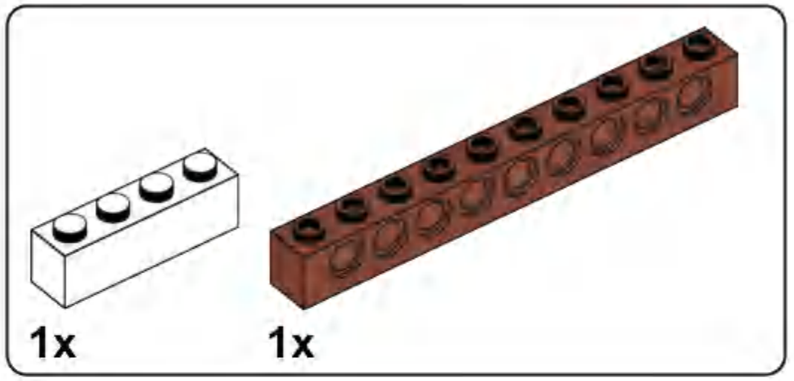

182

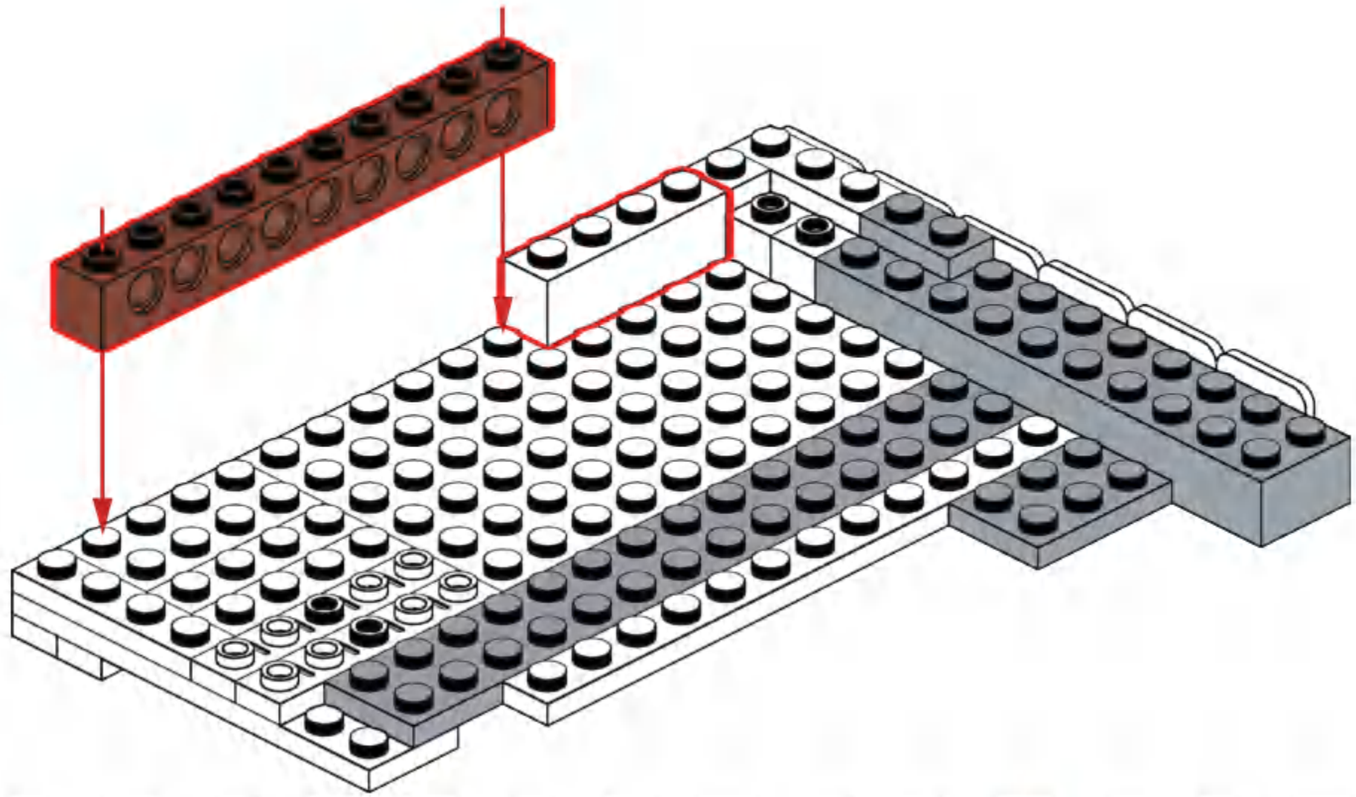

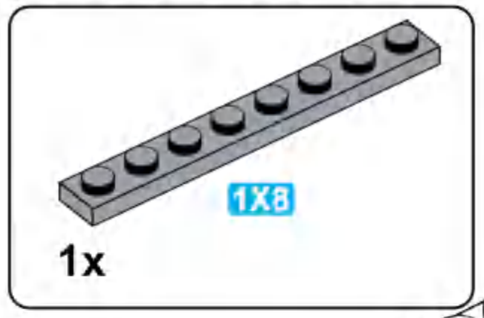

183

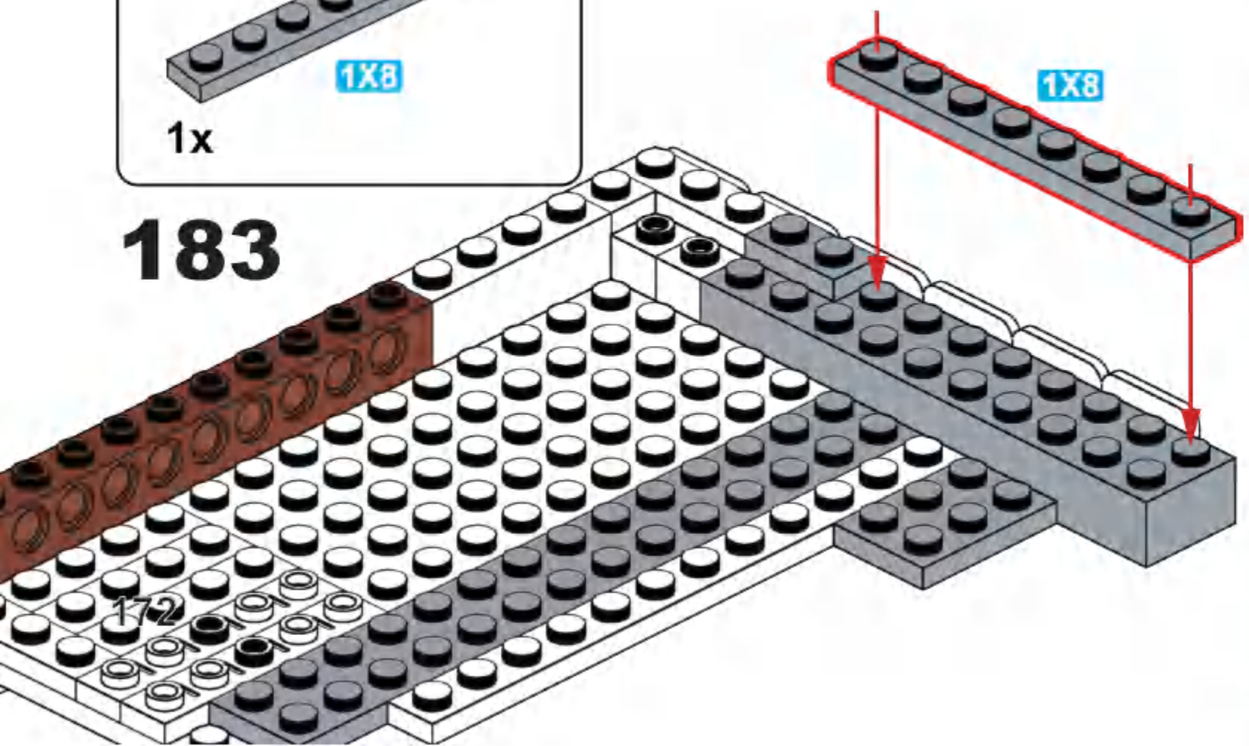

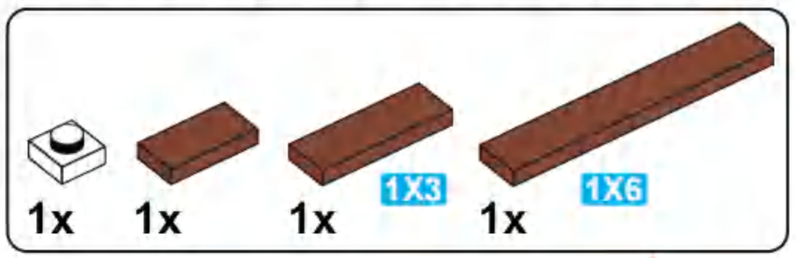

184

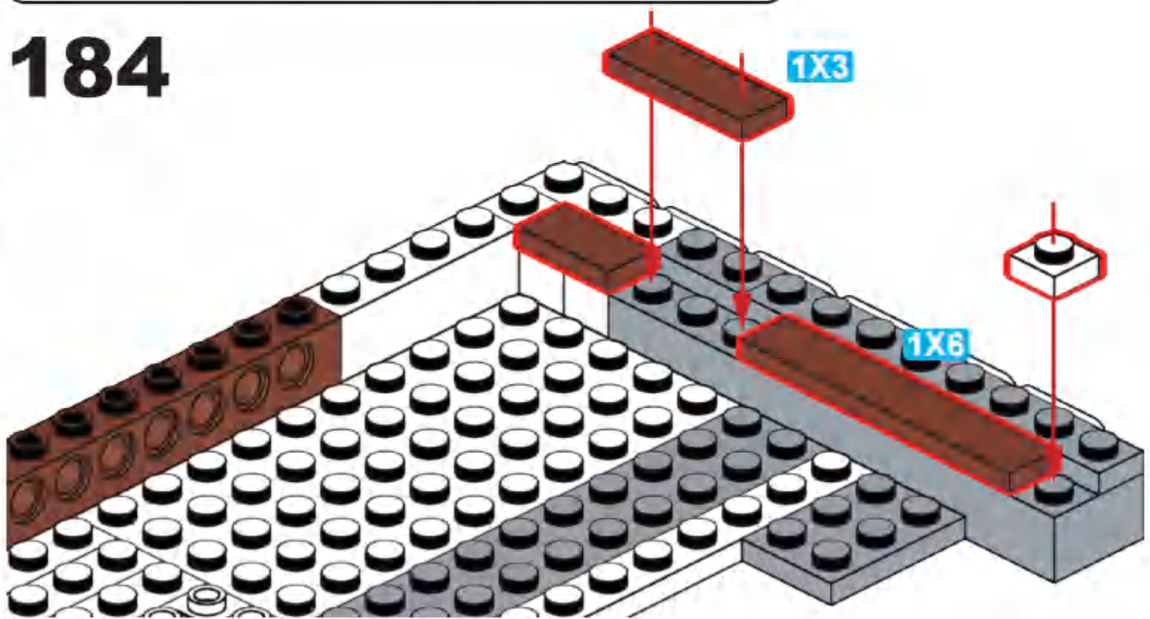

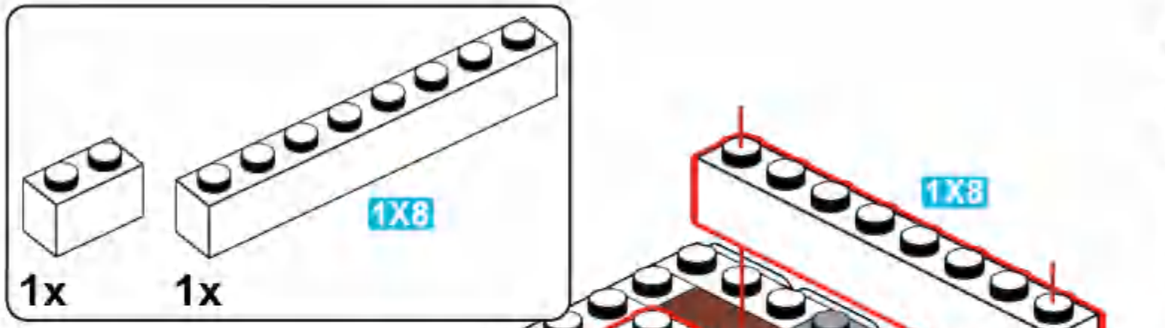

185

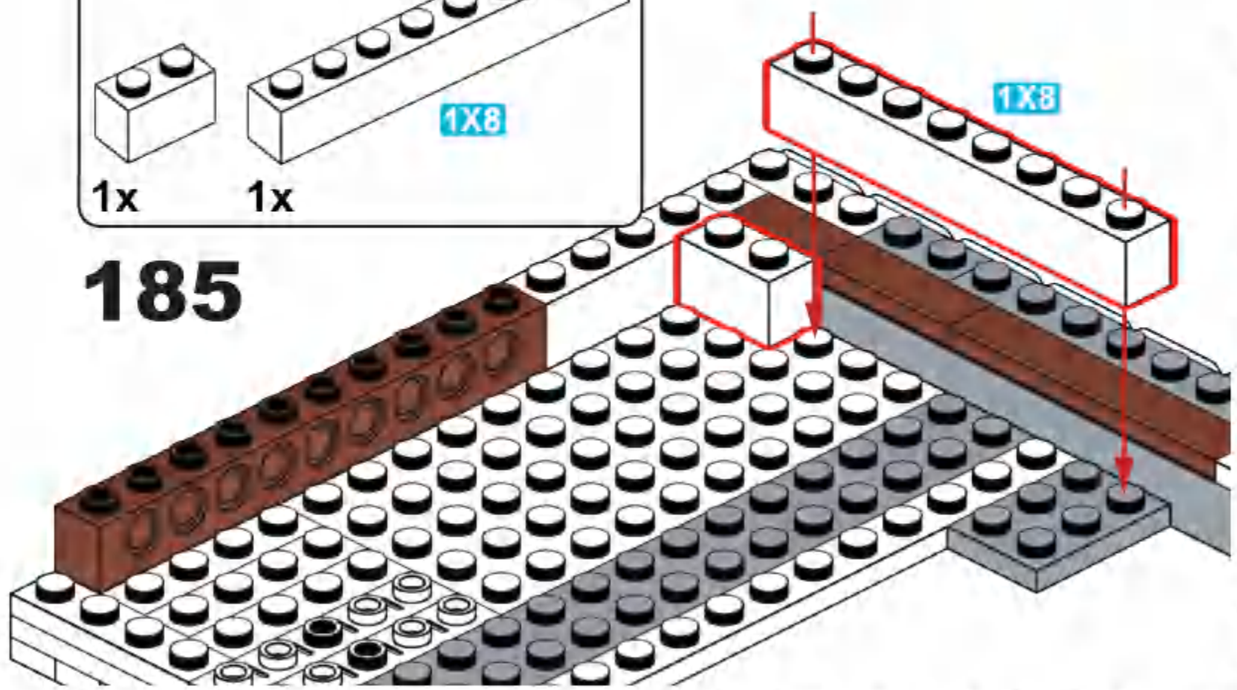

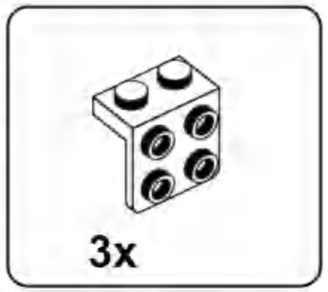

186

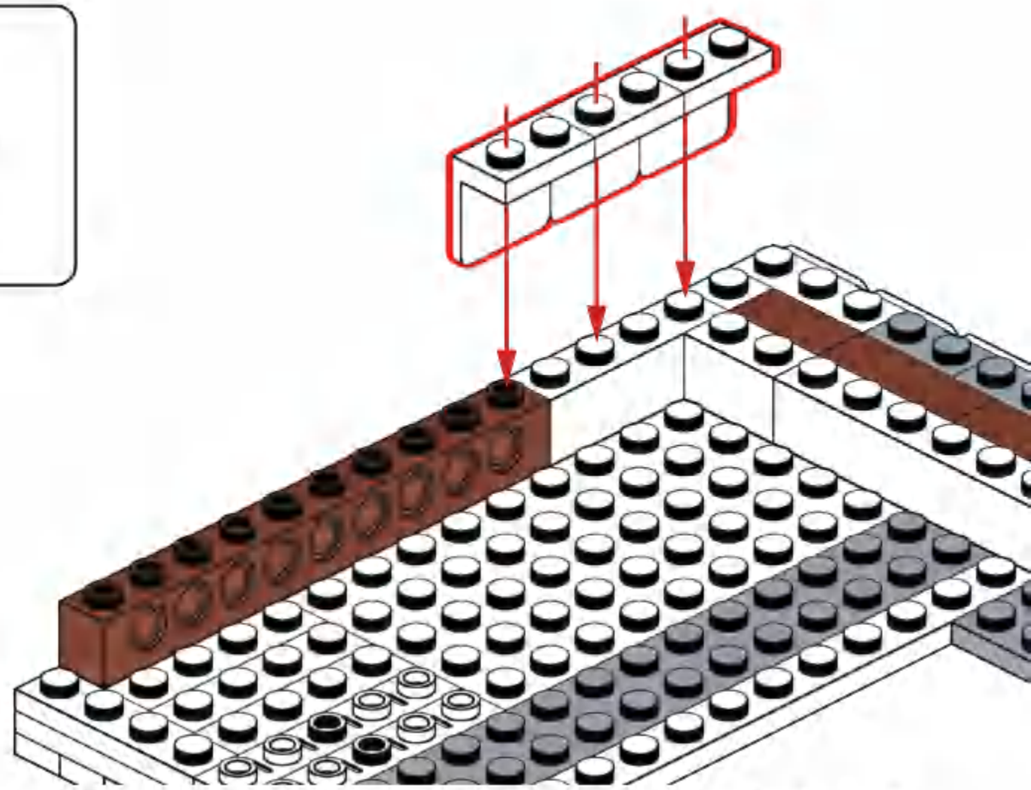

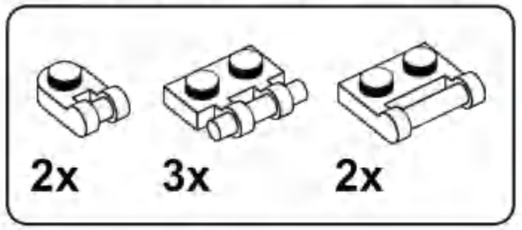

187

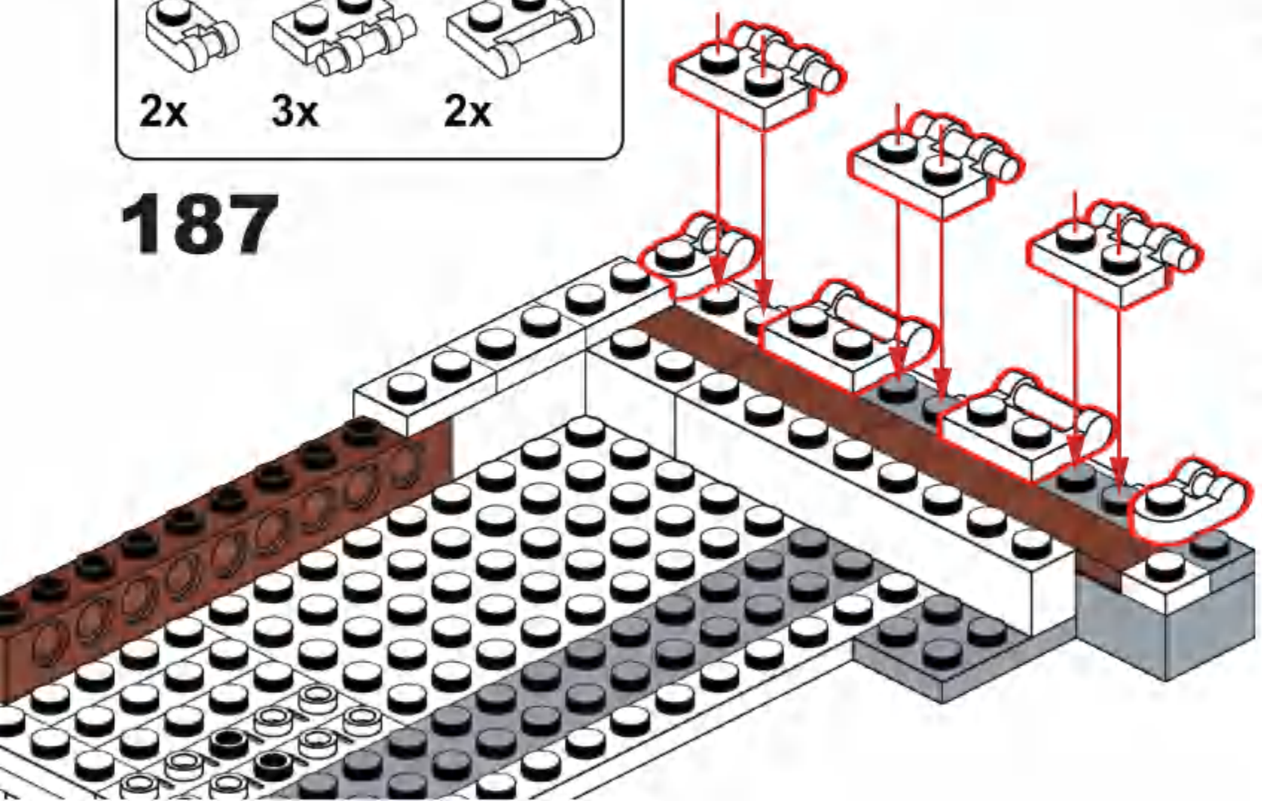

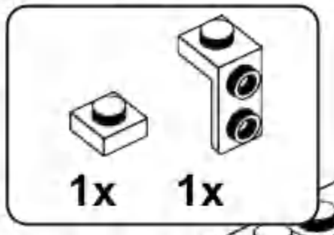

188

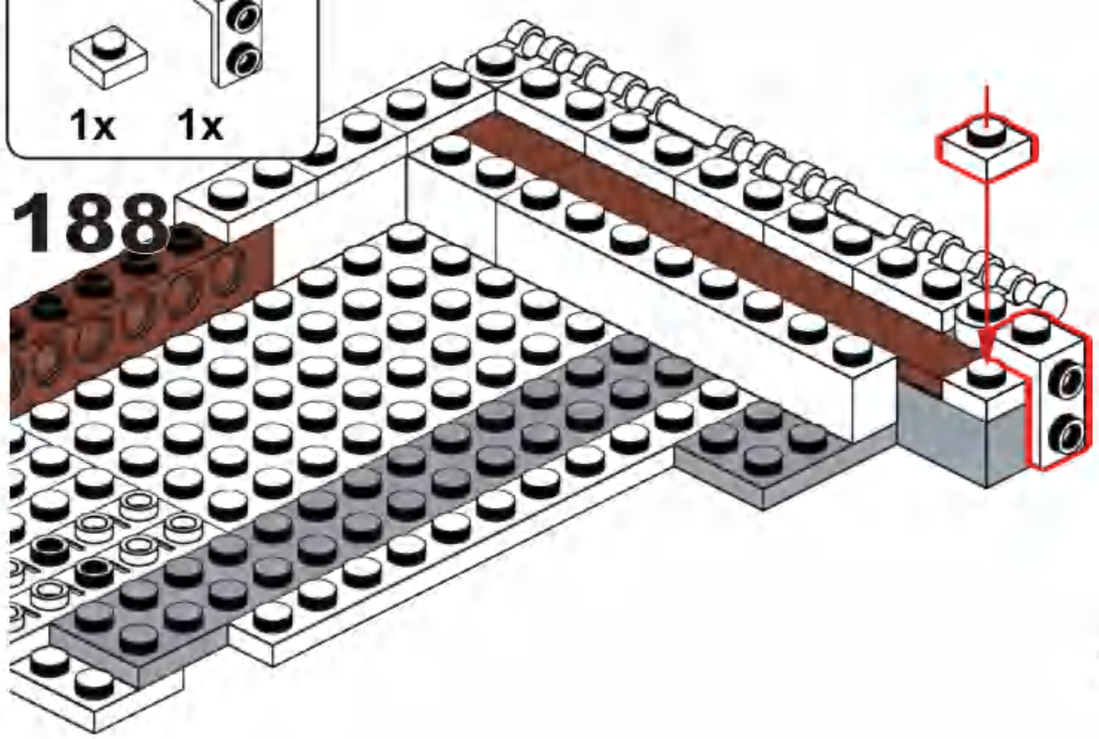

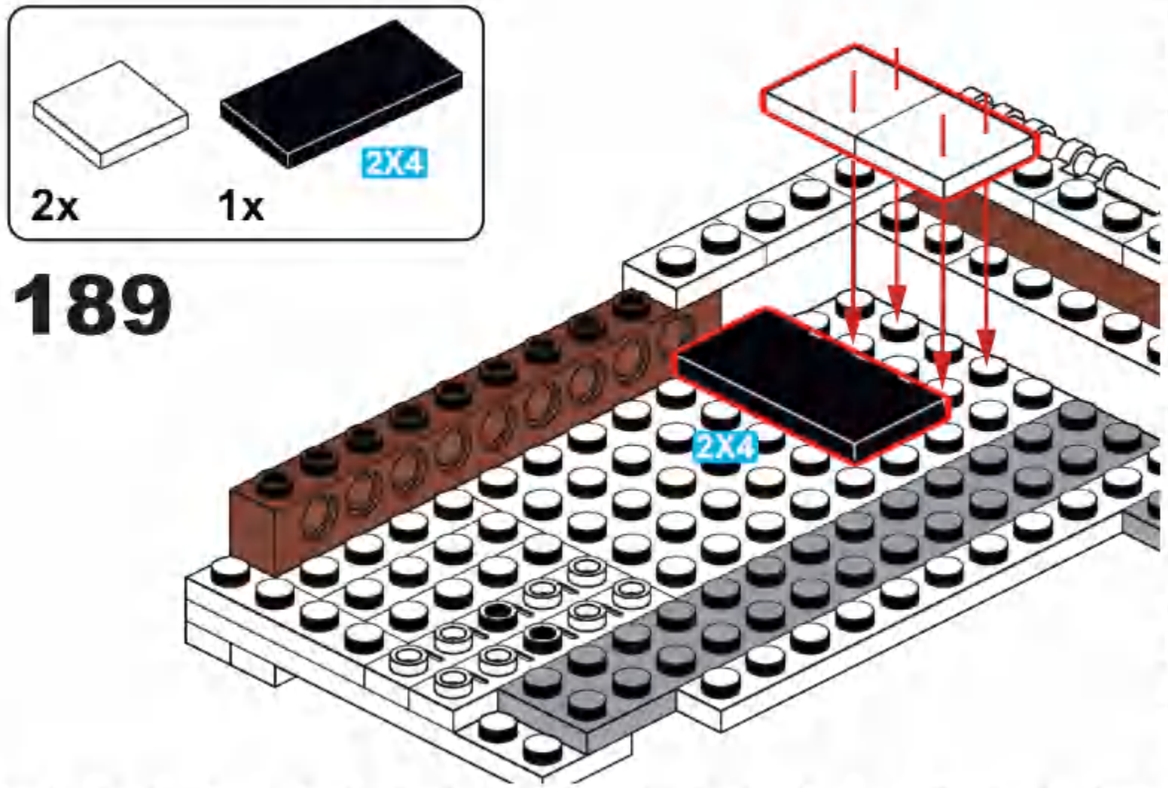

189

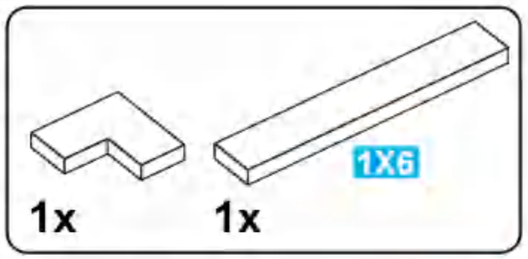

190

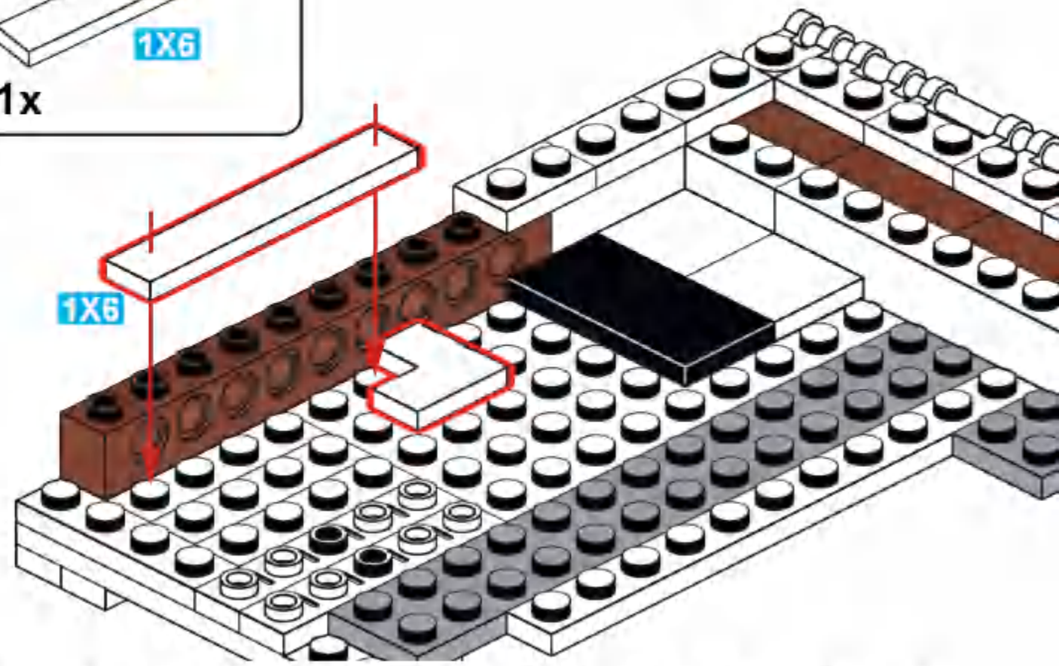

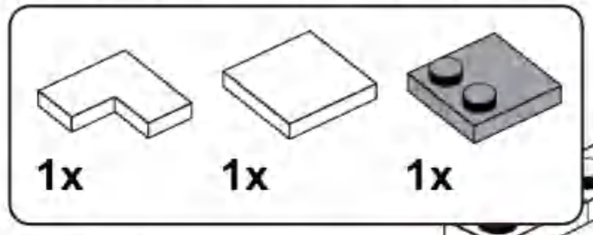

191

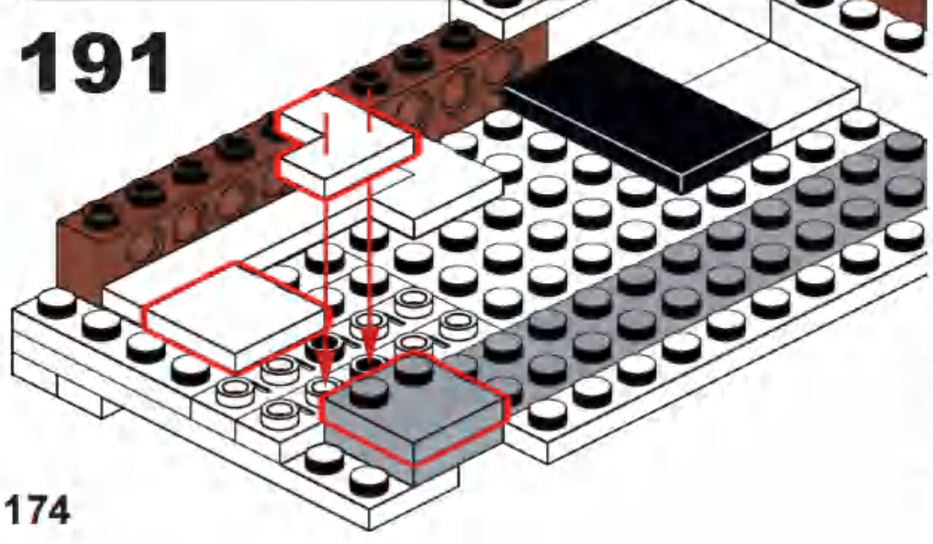

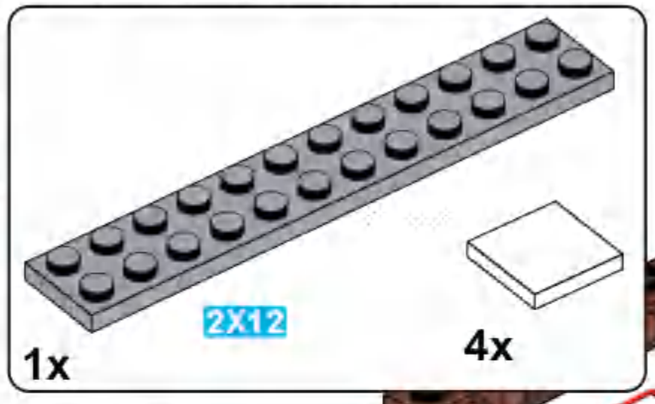

192

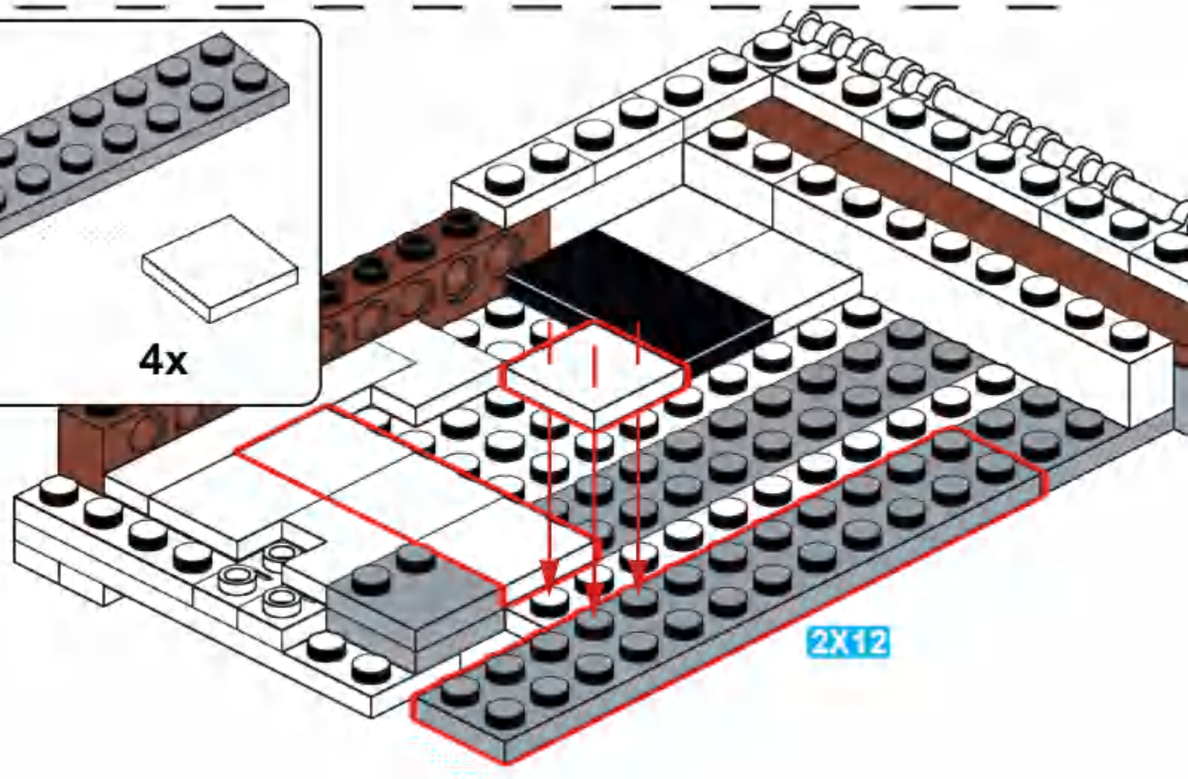

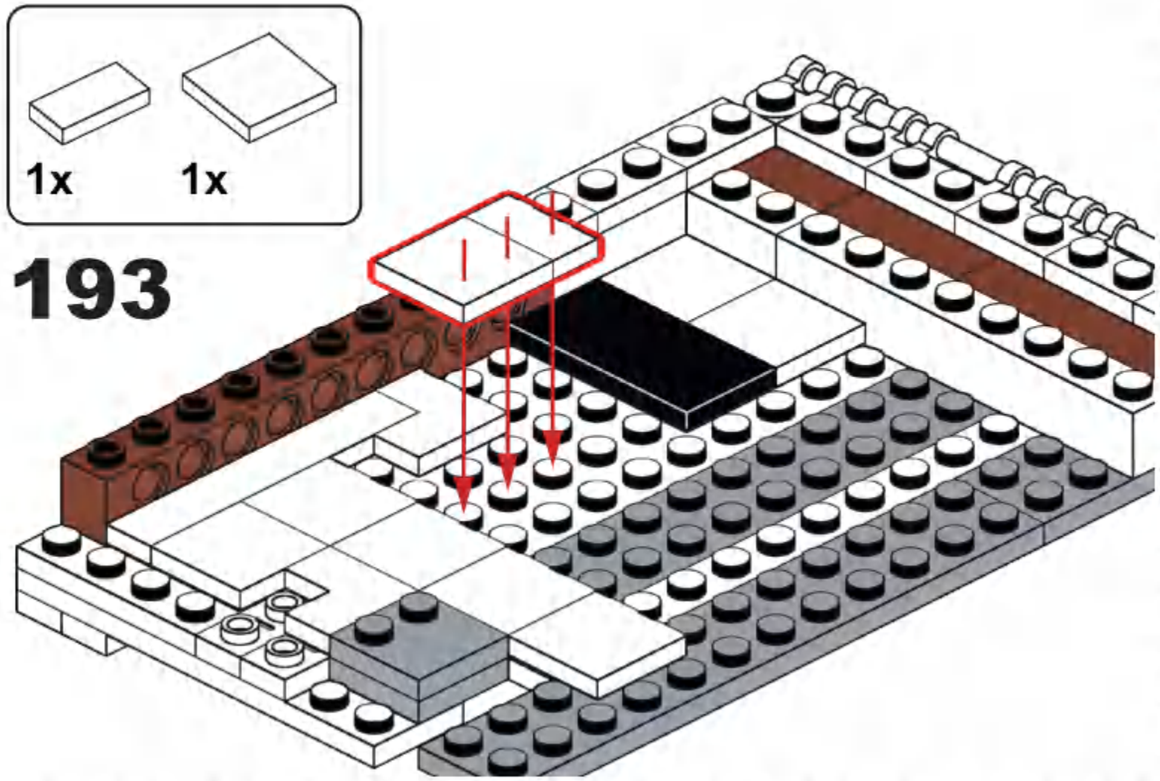

193

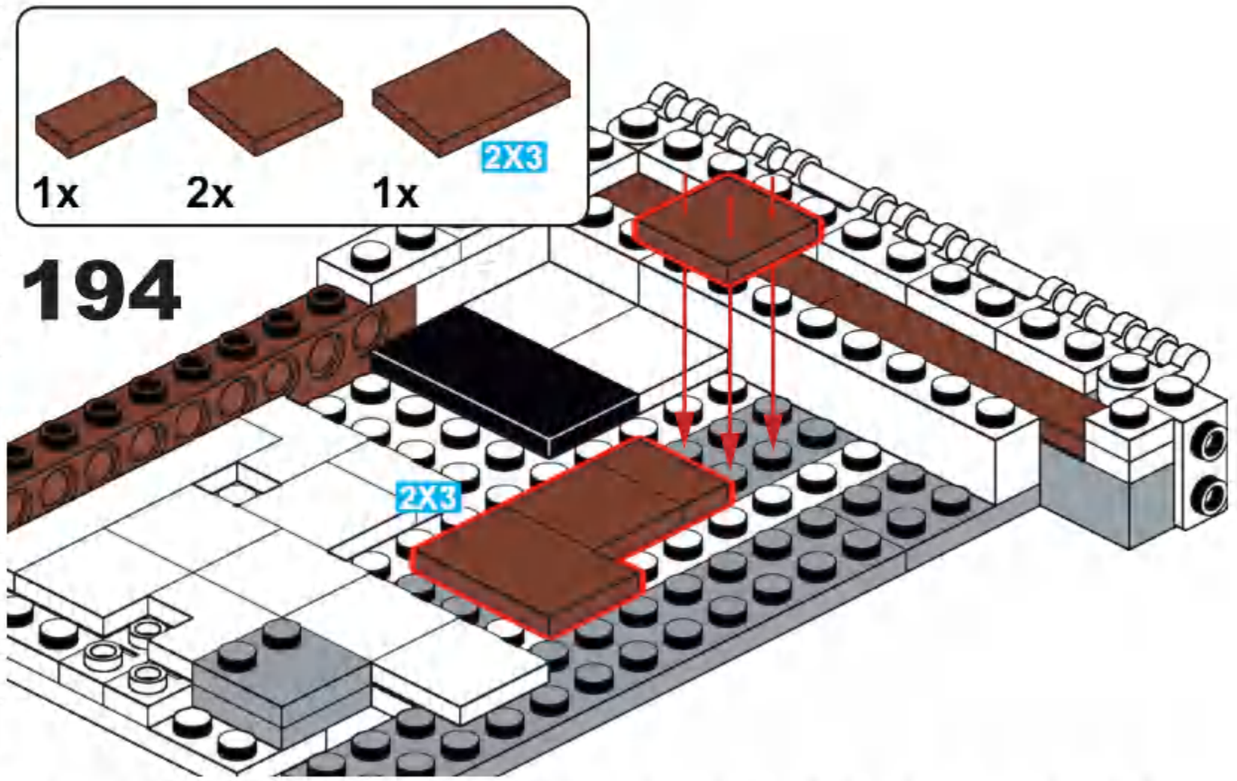

194

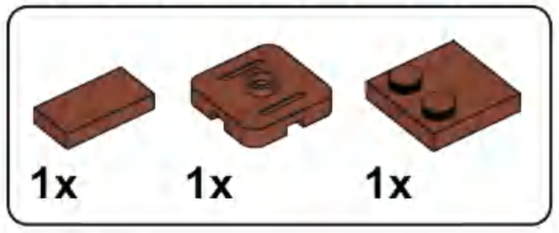

195

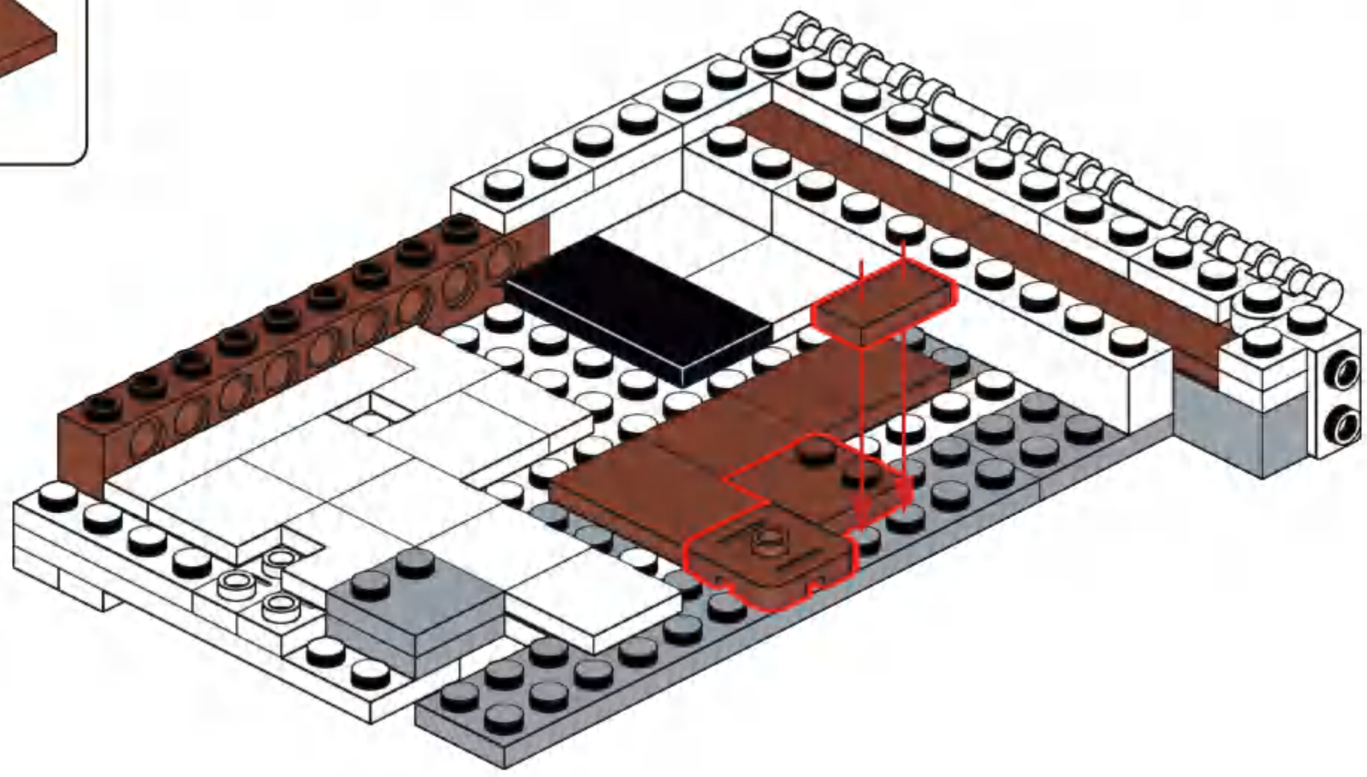

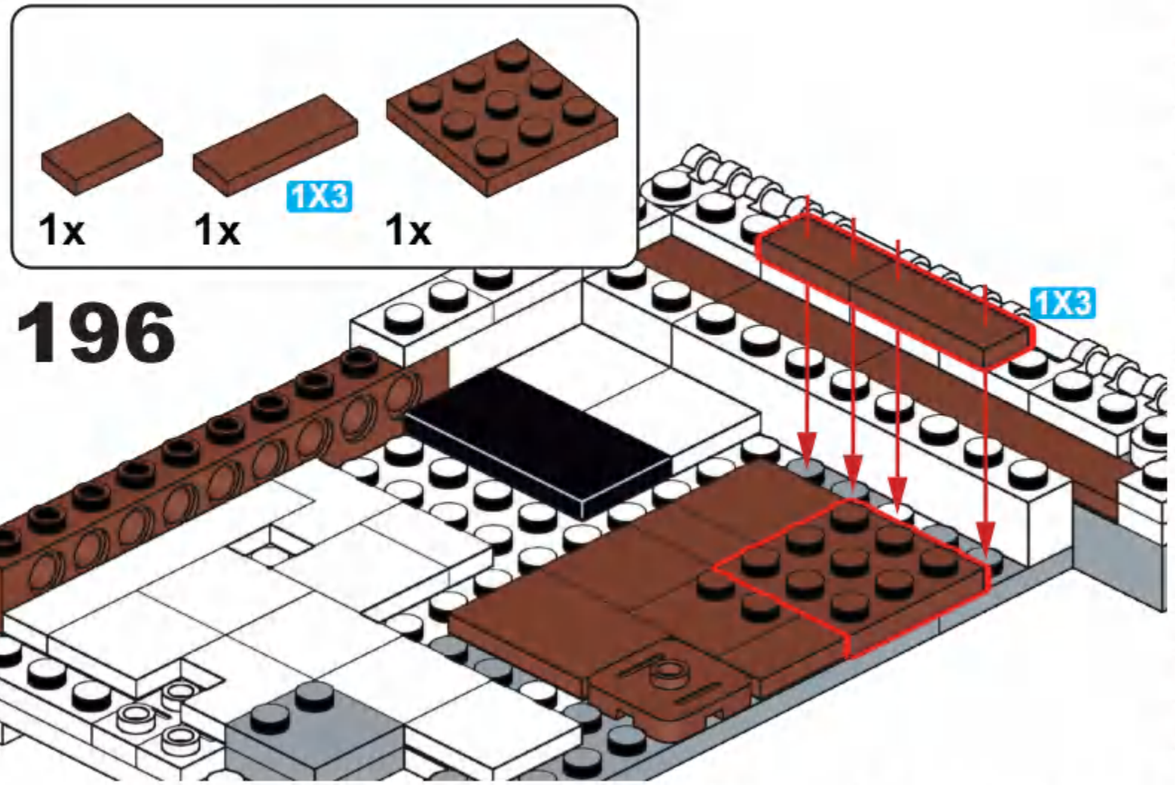

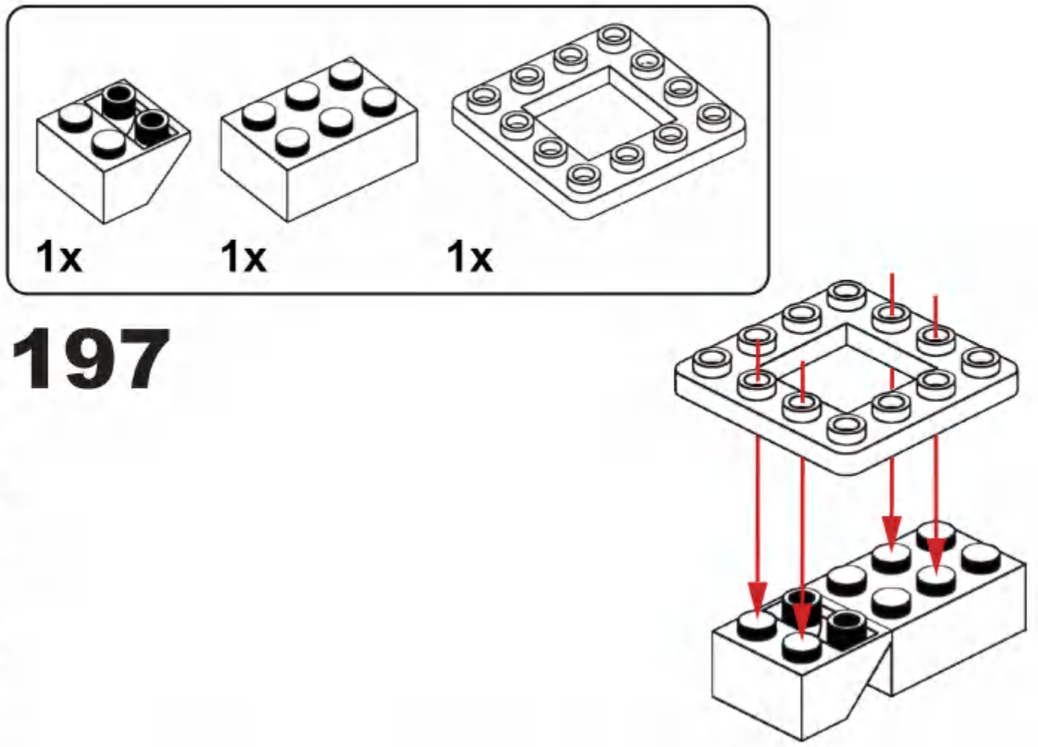

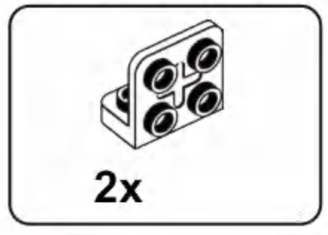

198

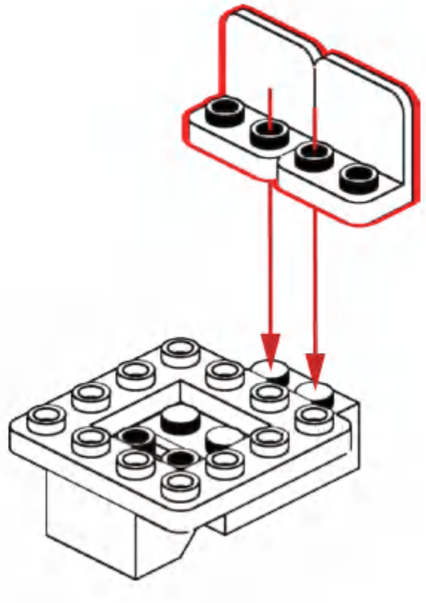

199

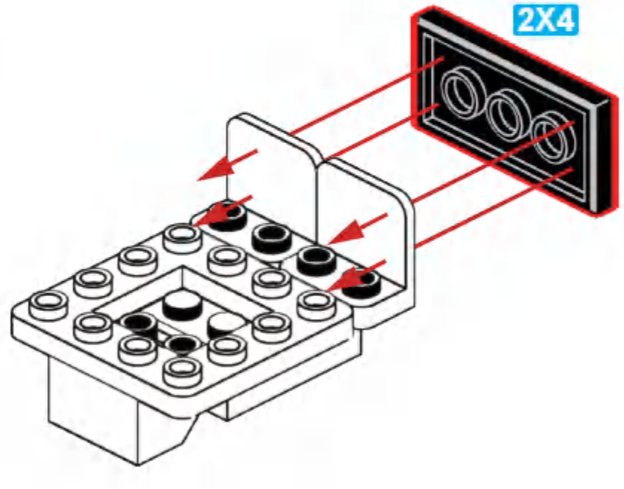

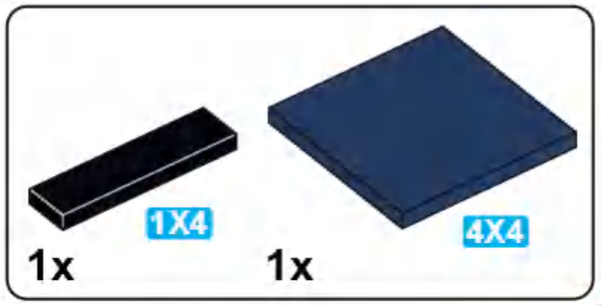

200

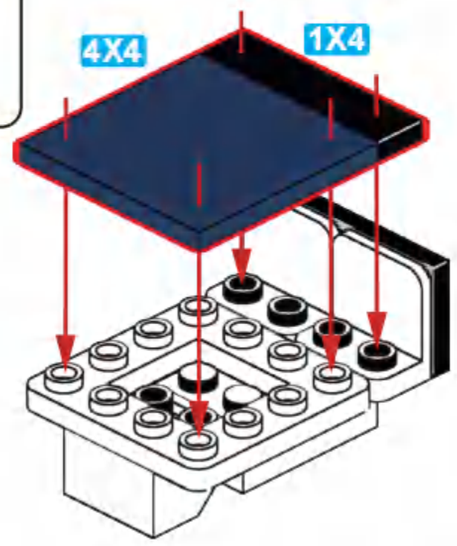

201

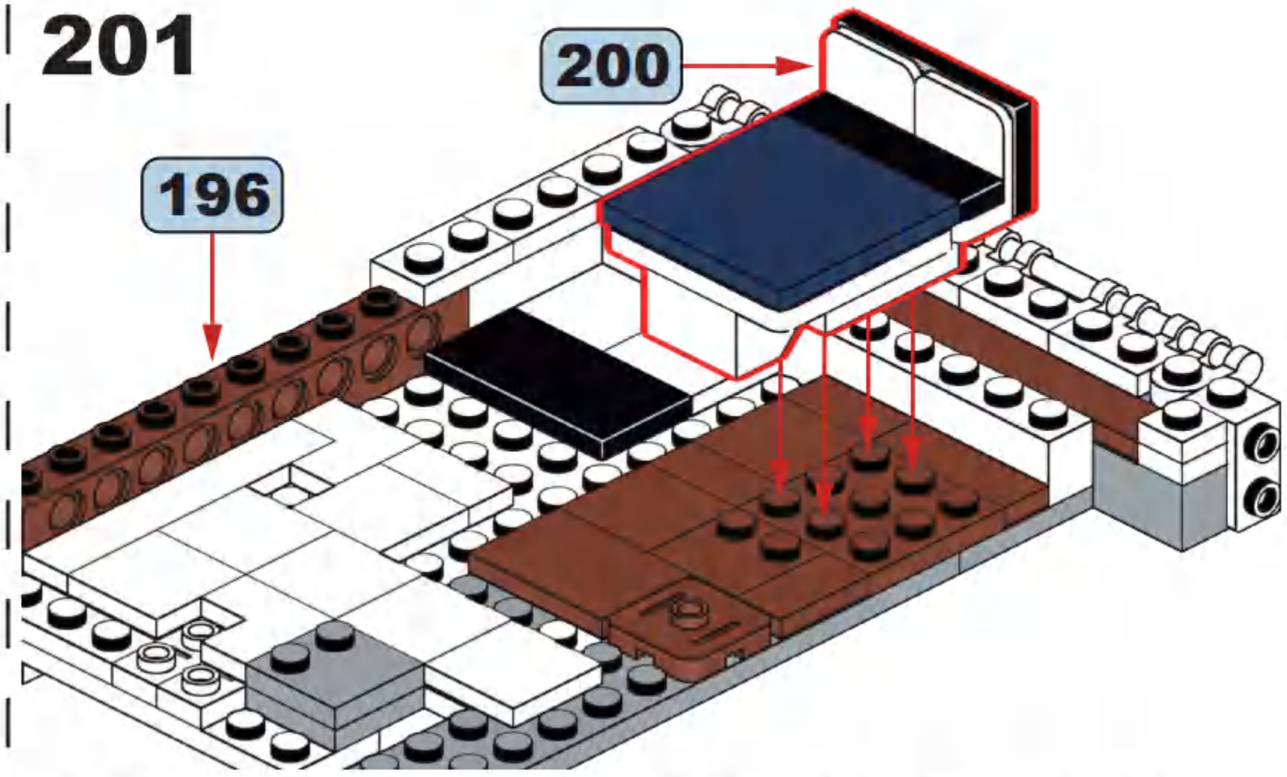

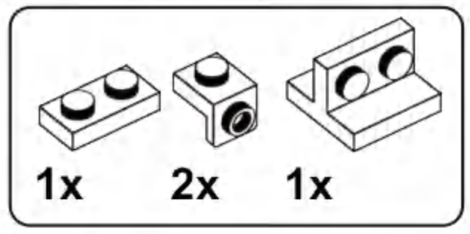

202

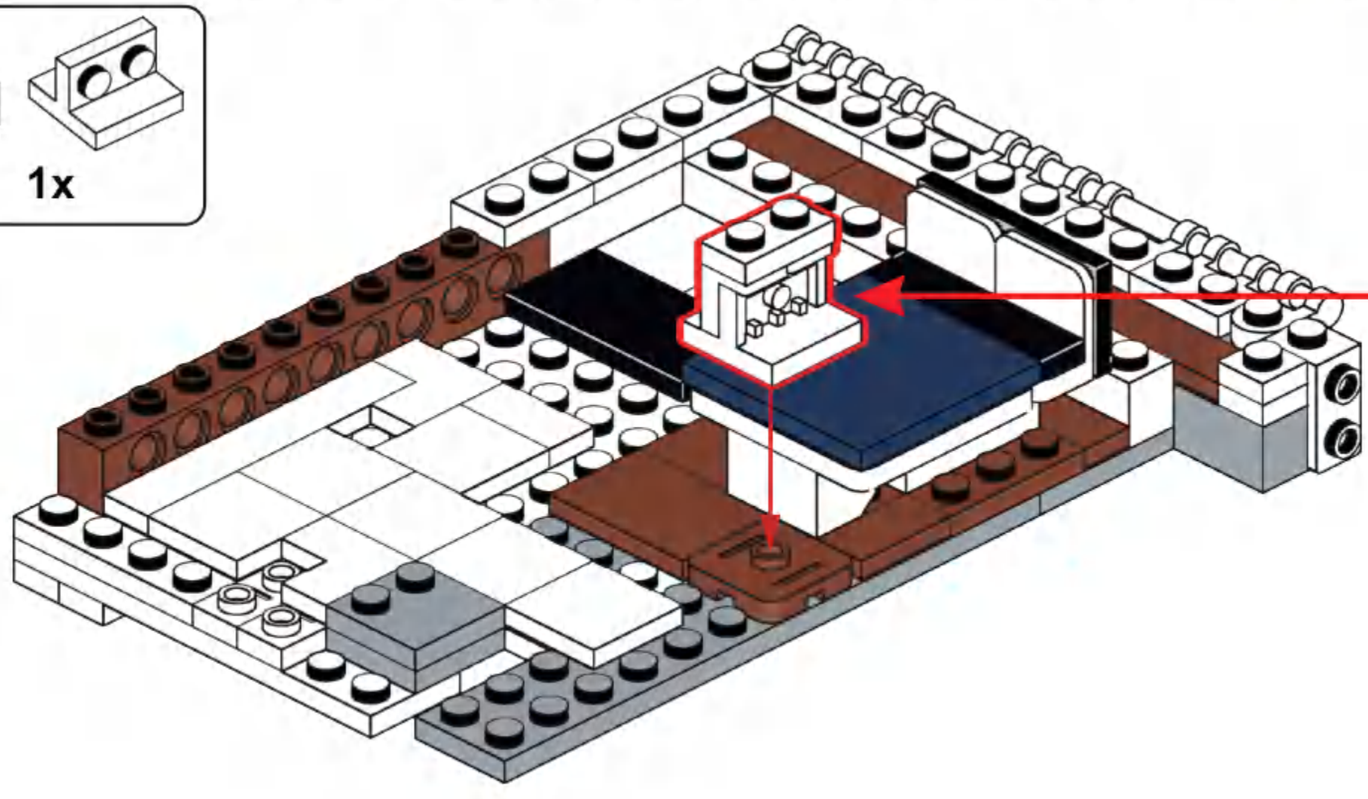

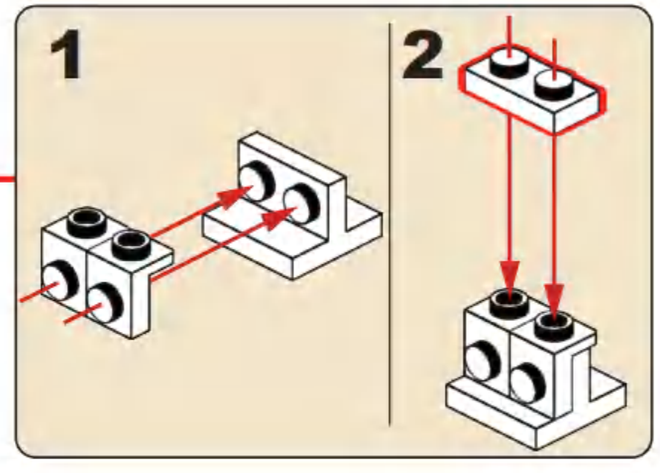

1x

203

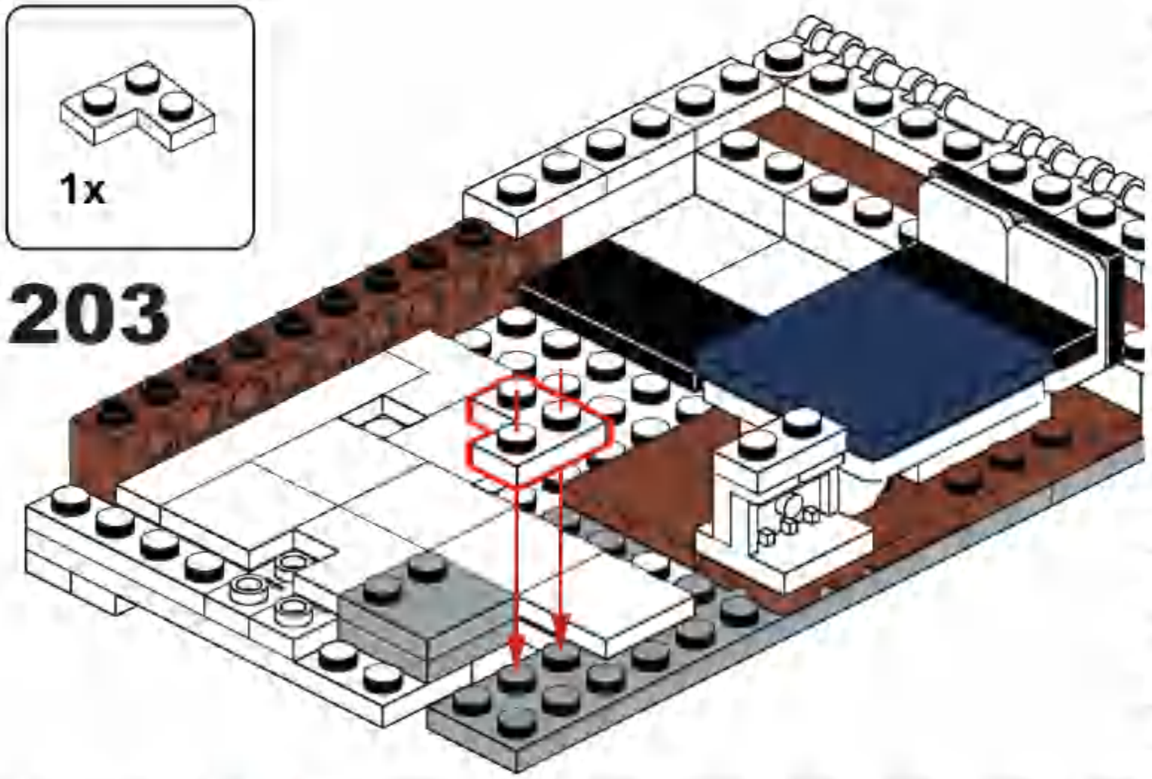

1x 1x

204

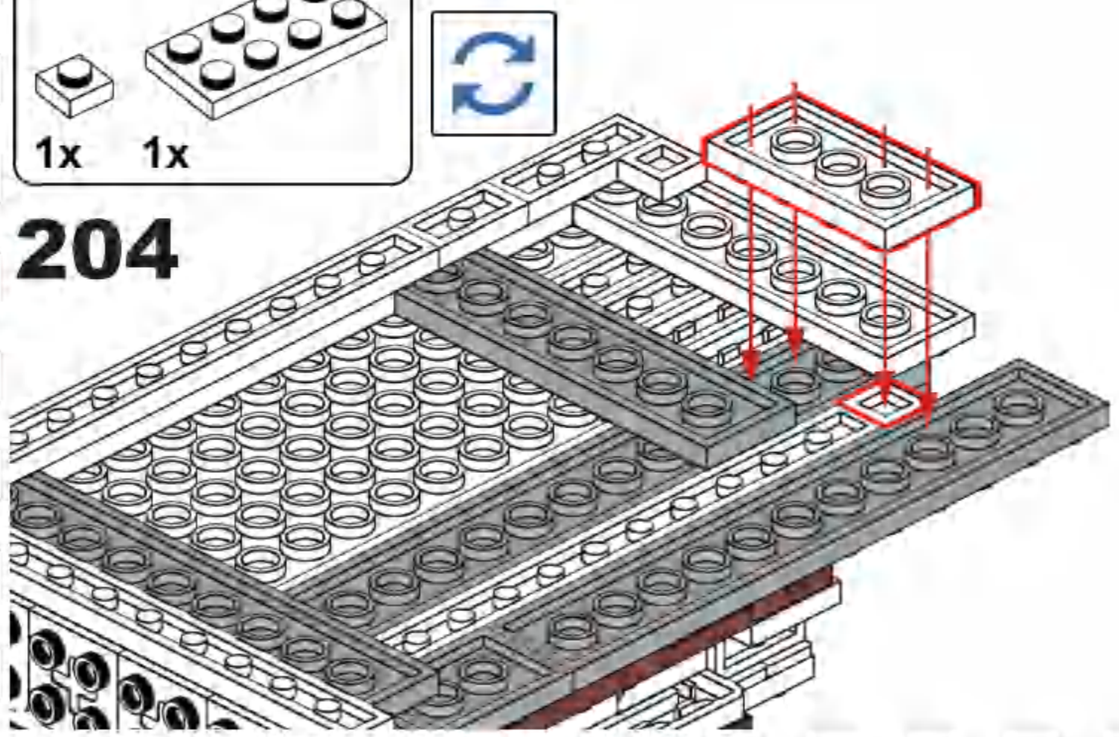

1x

1X6

205

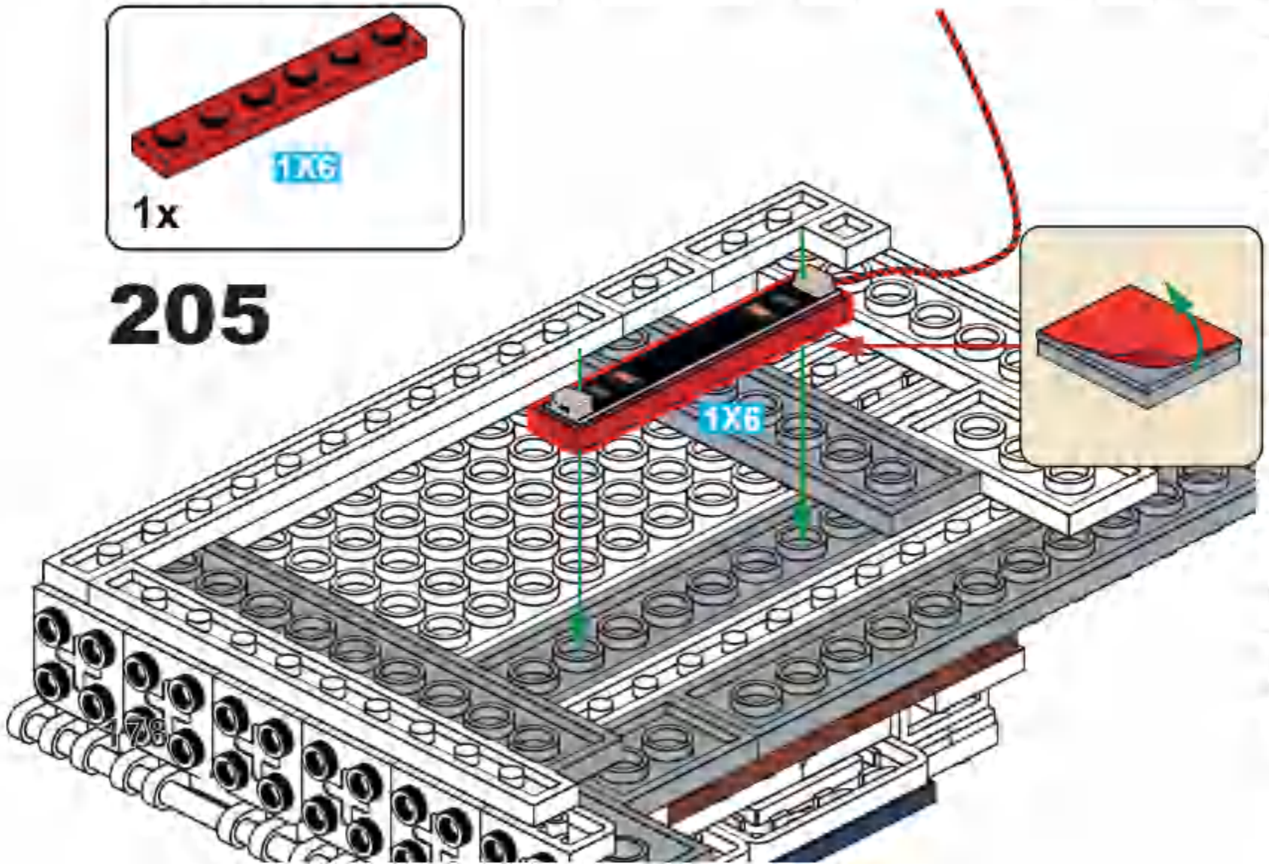

1x

206

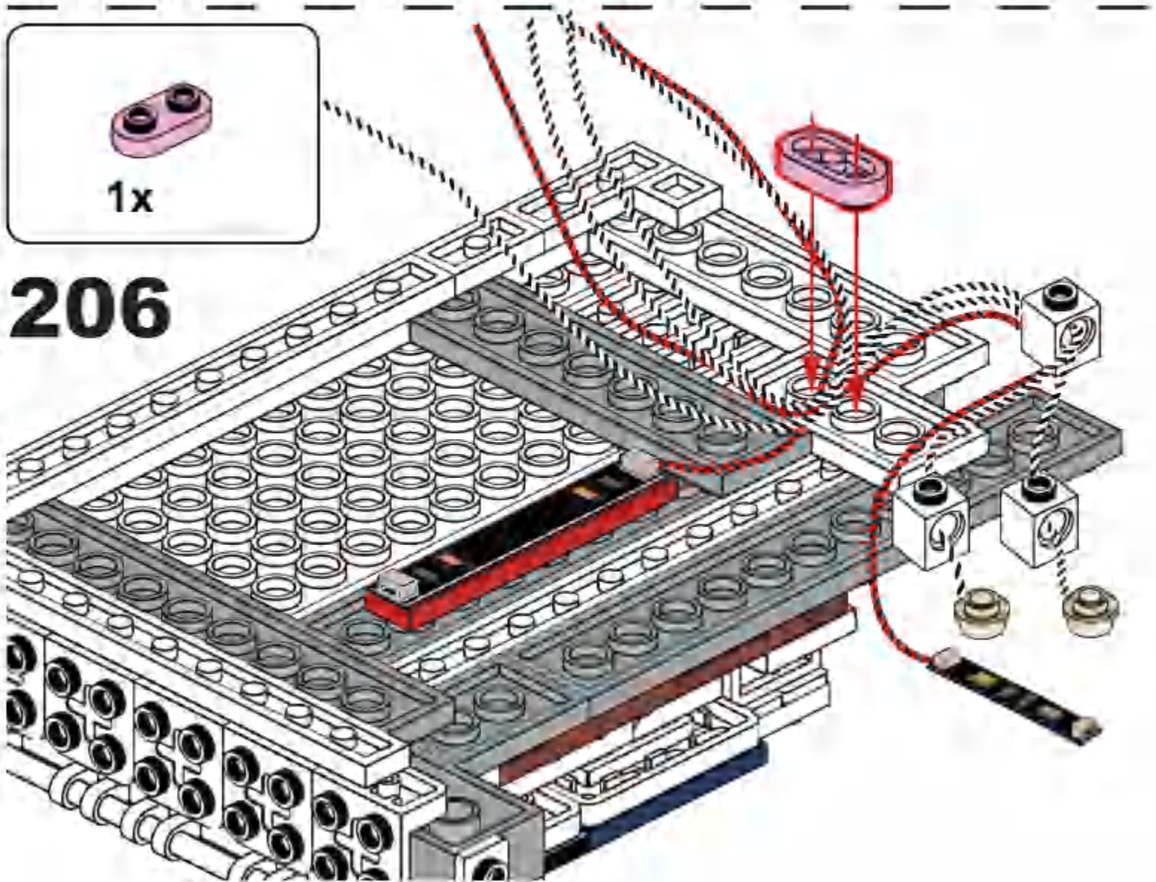

207

206

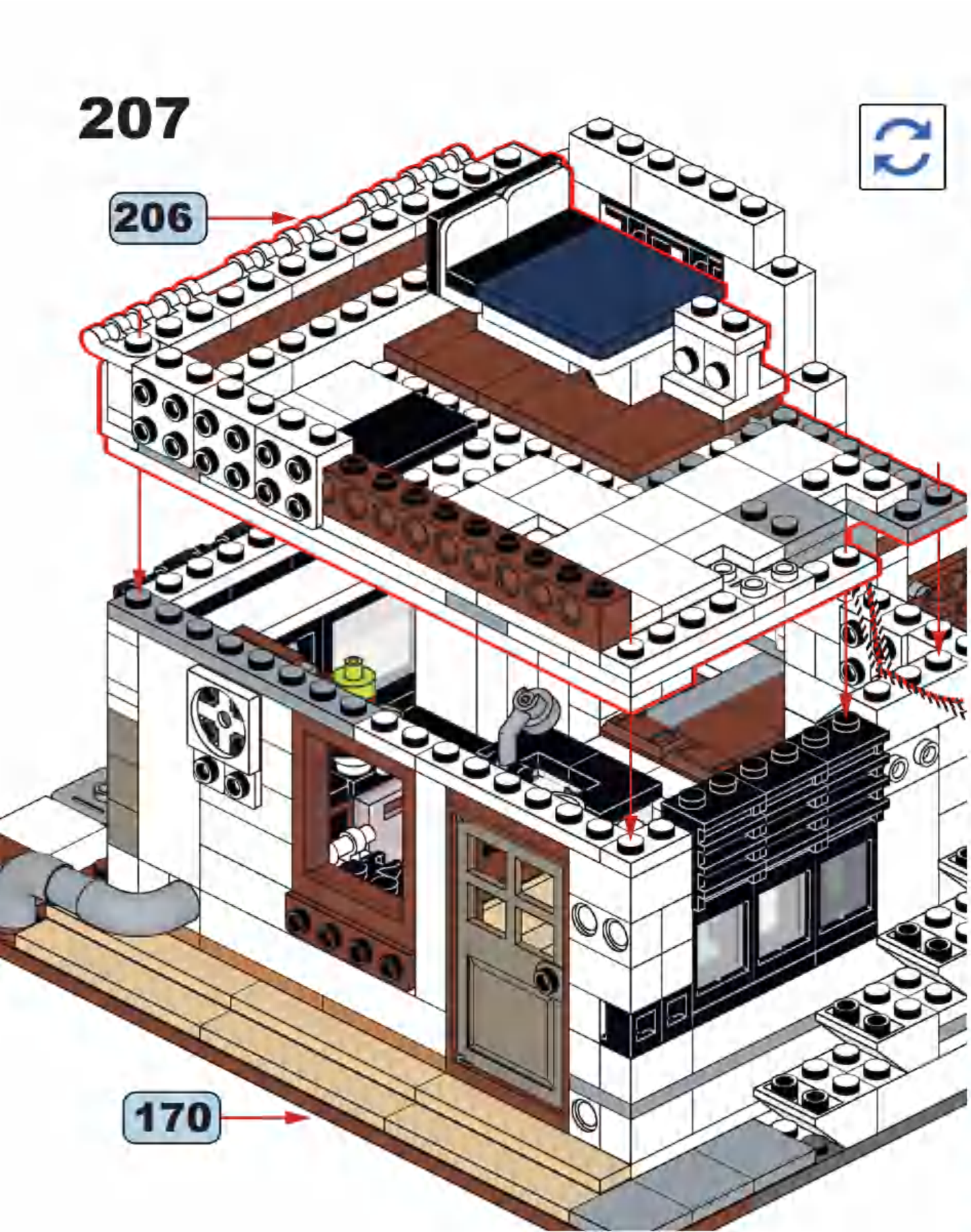

170

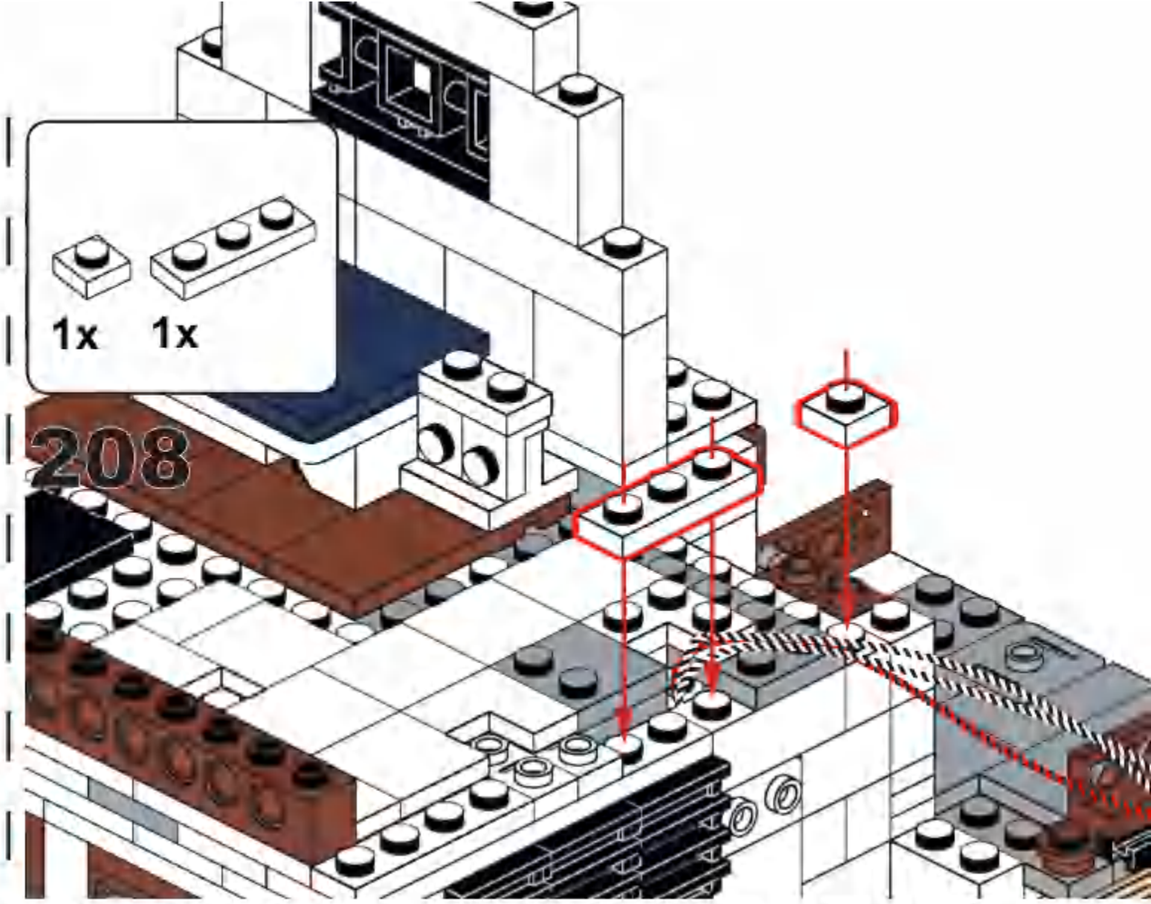

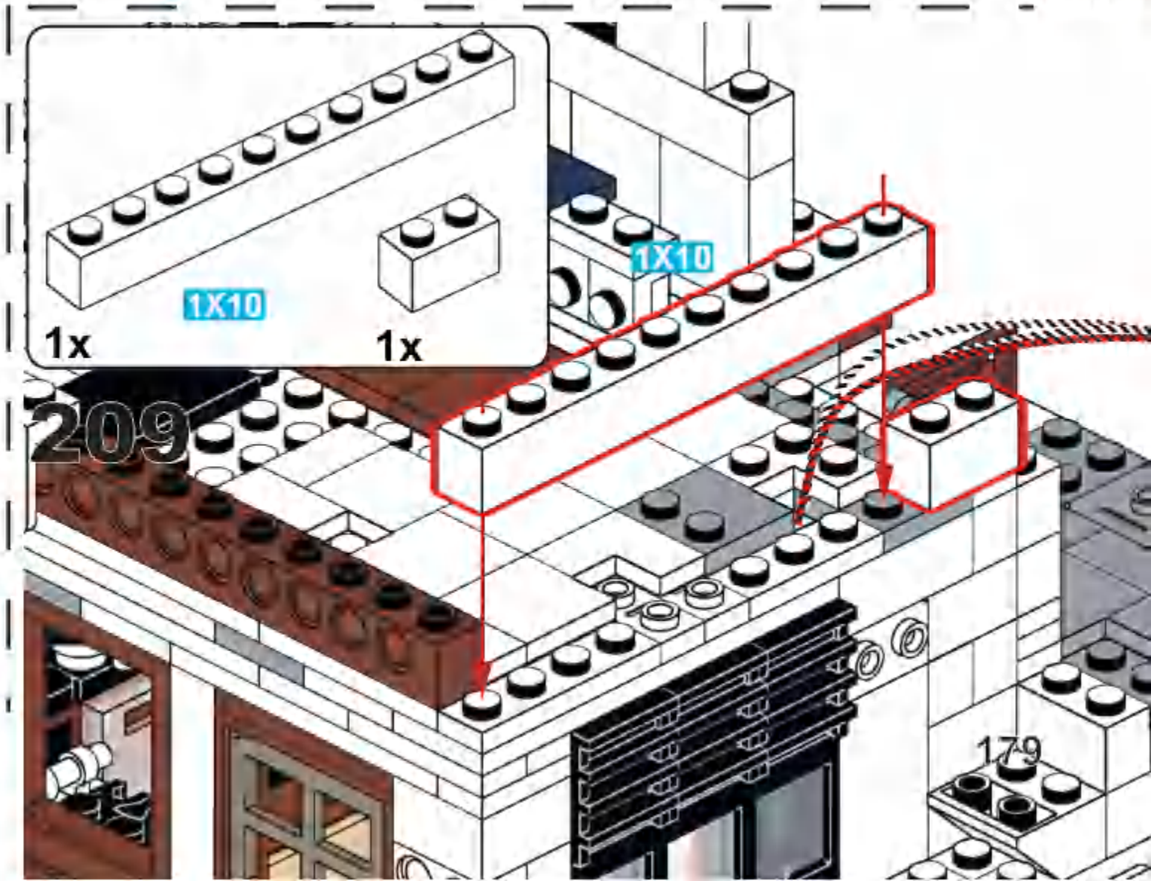

11x

210

1x

1X10

211

1X10

1x

1x

1x

212

1x

2x

1x

213

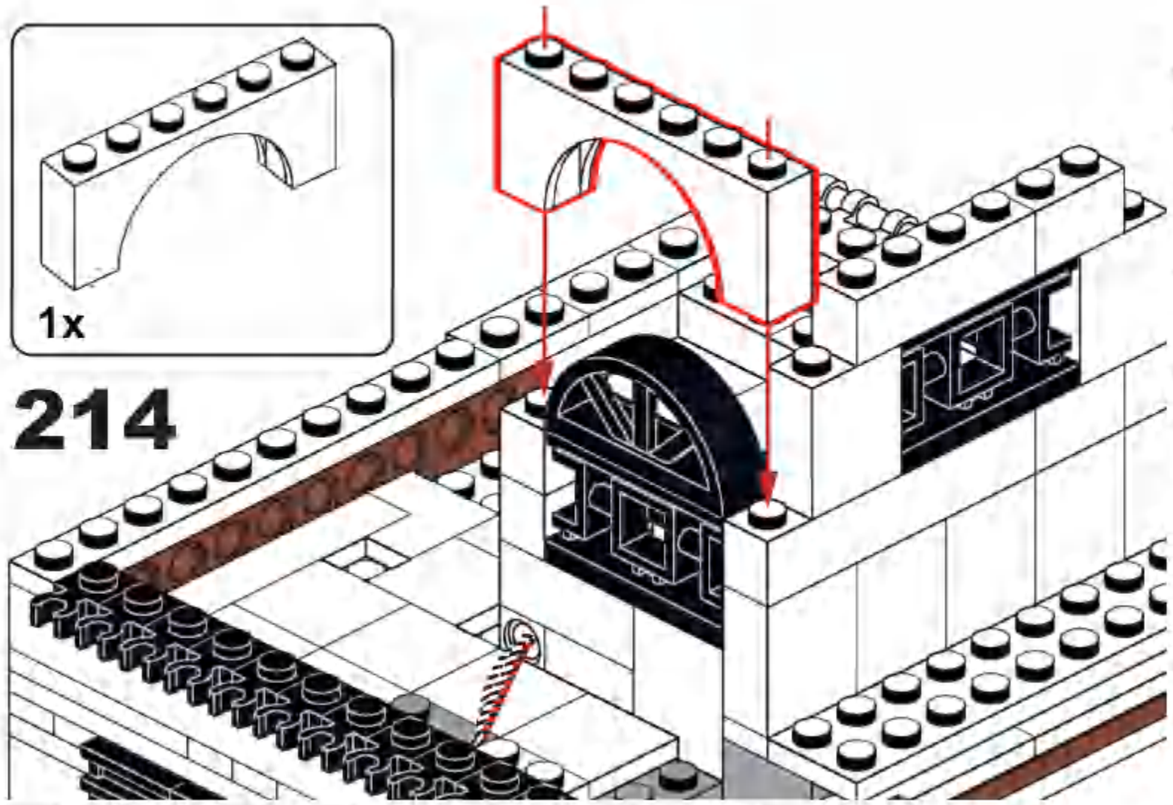

214

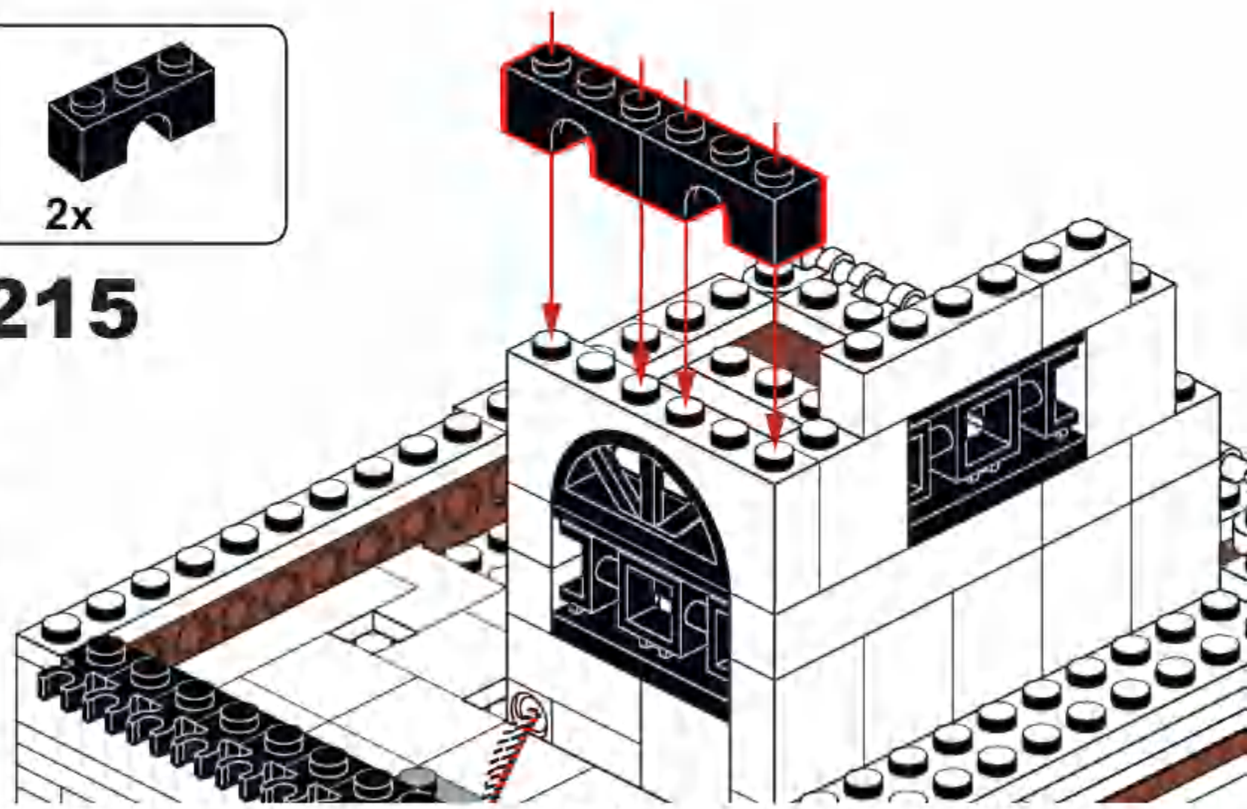

215

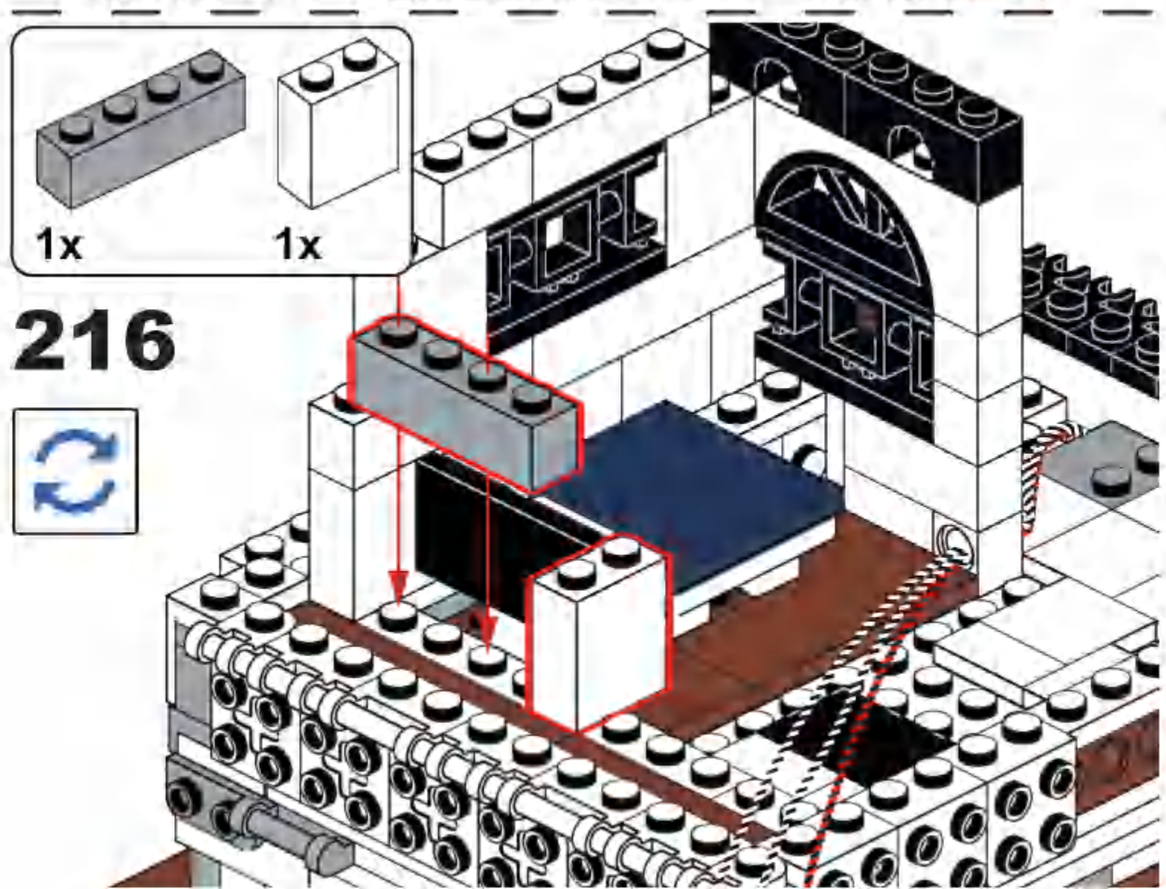

216

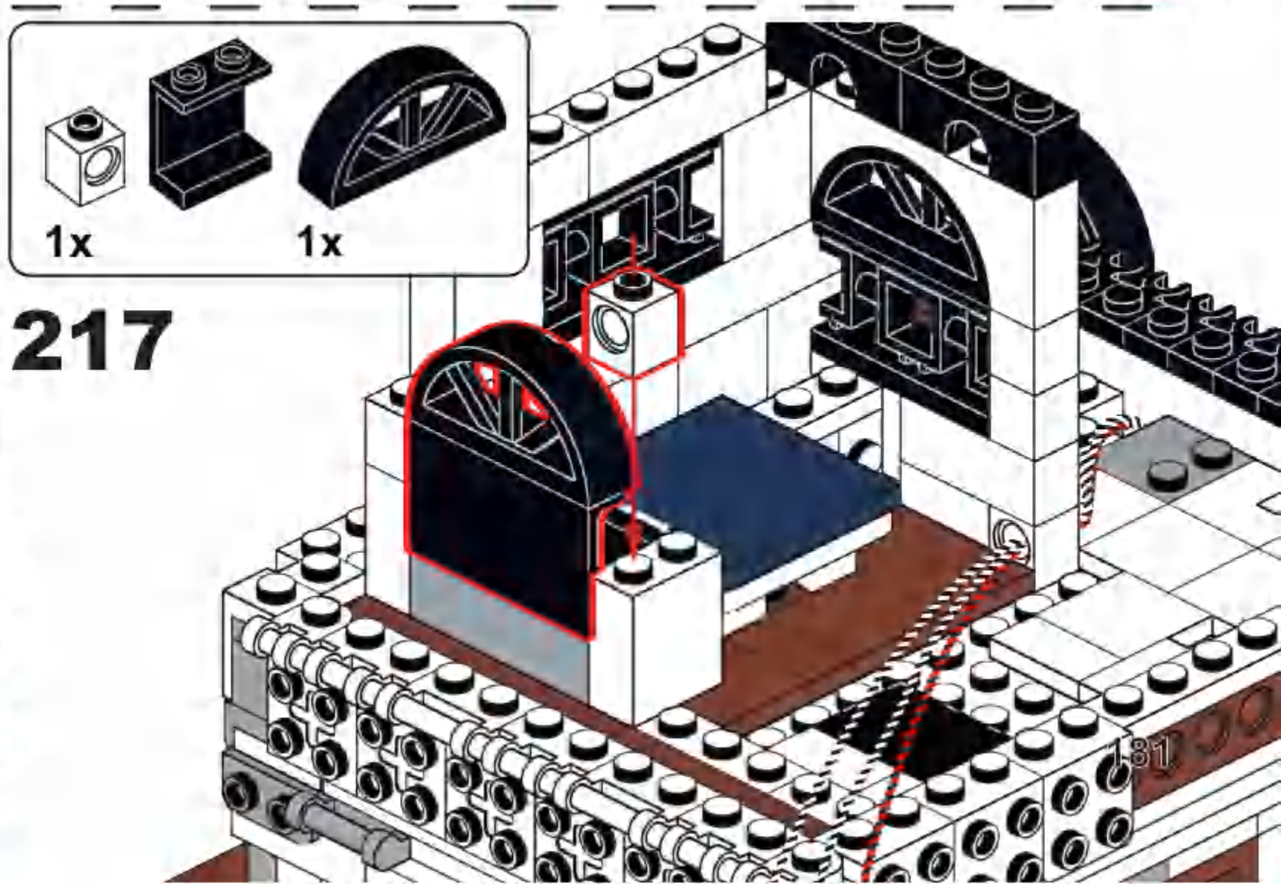

217

1x

218

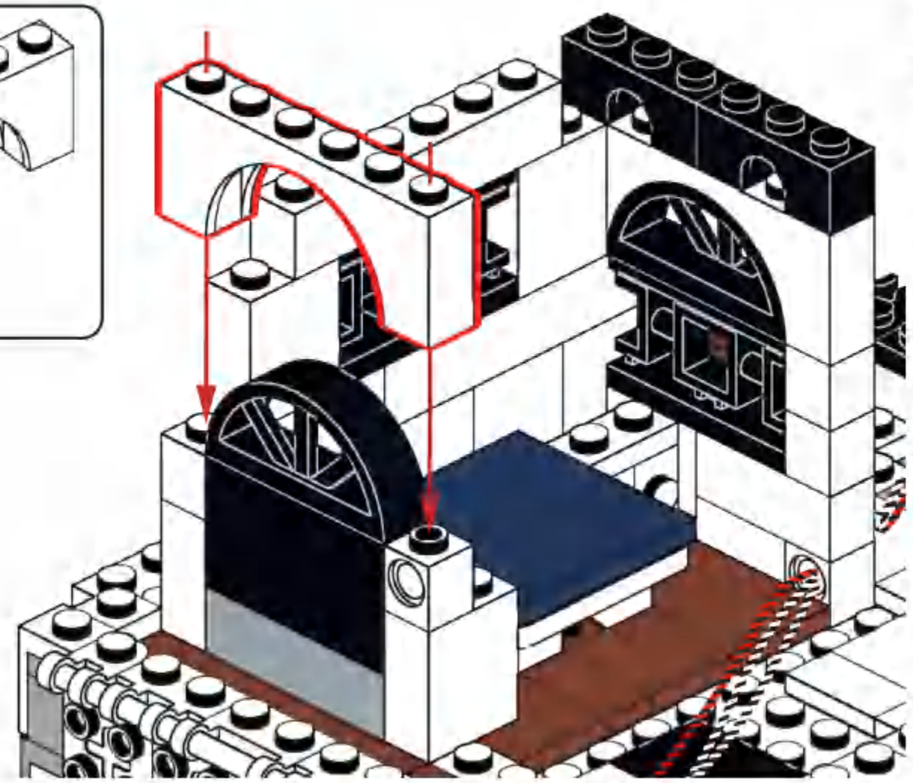

2x

219

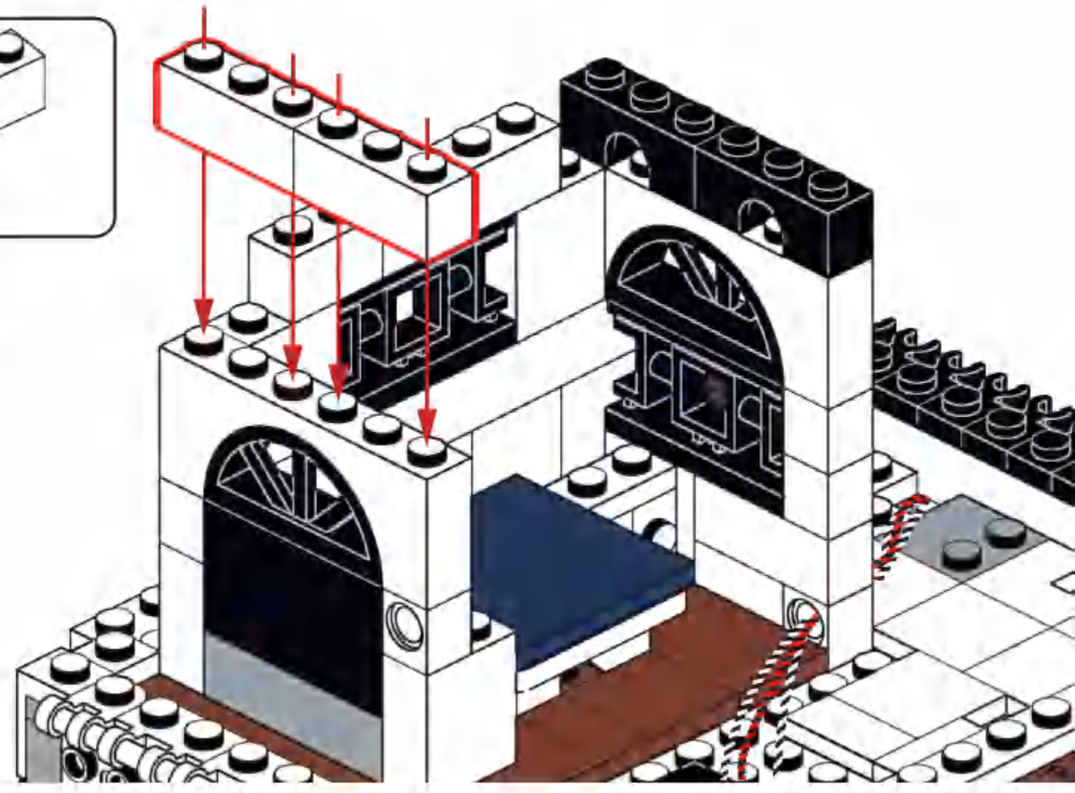

2x 2x

220

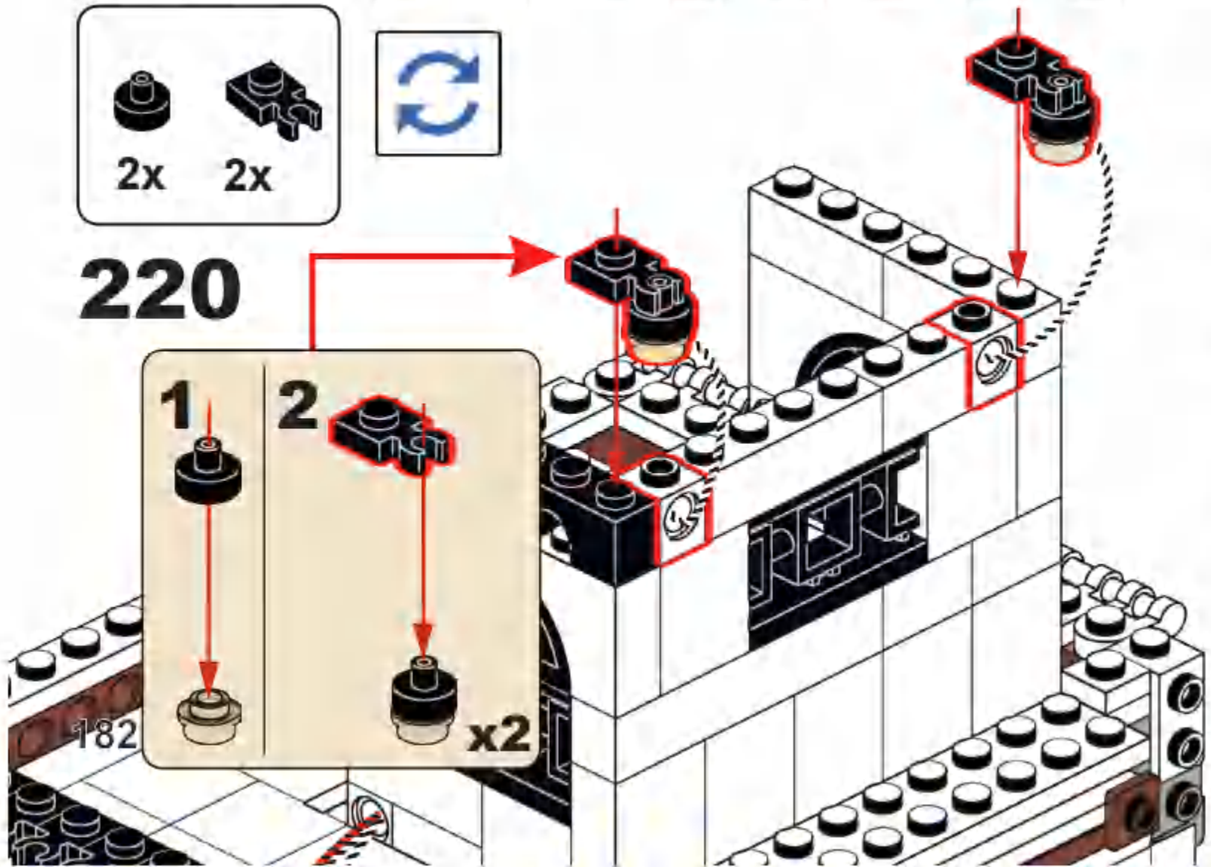

1X8

1x

221

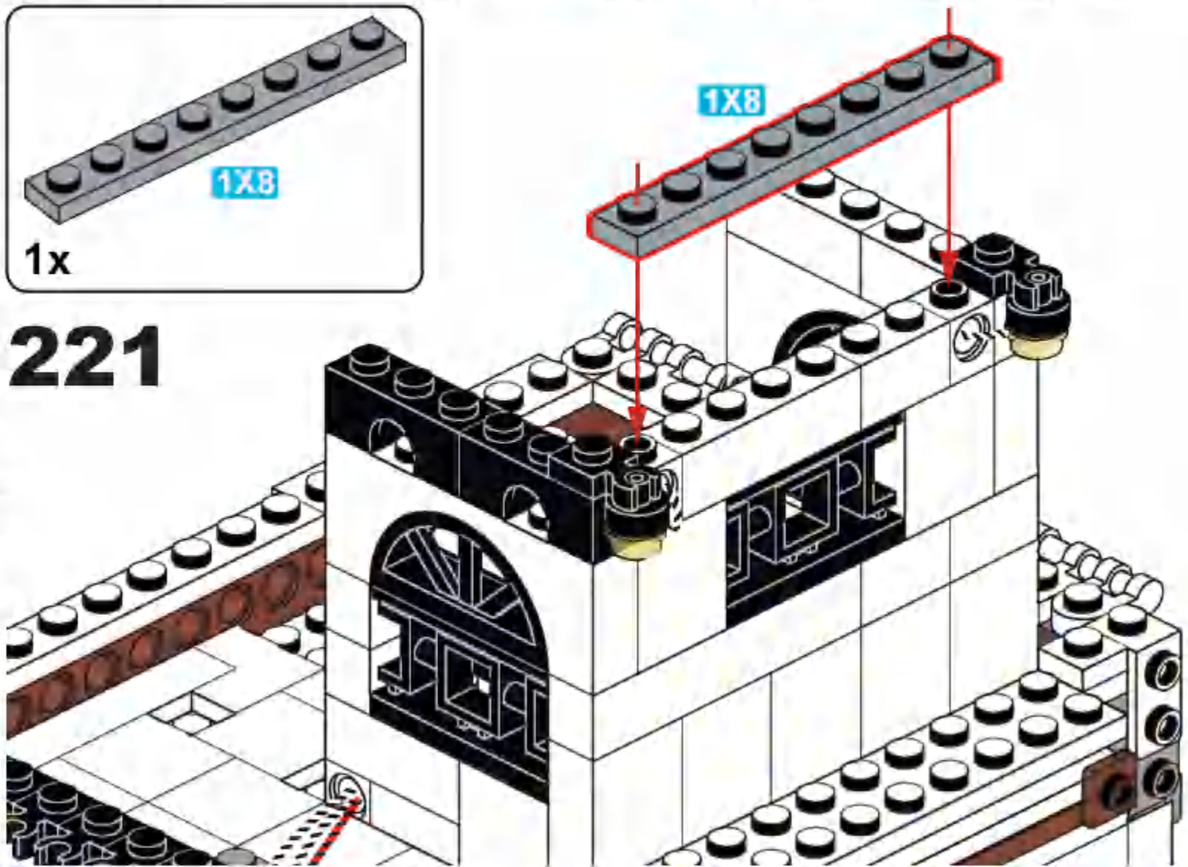

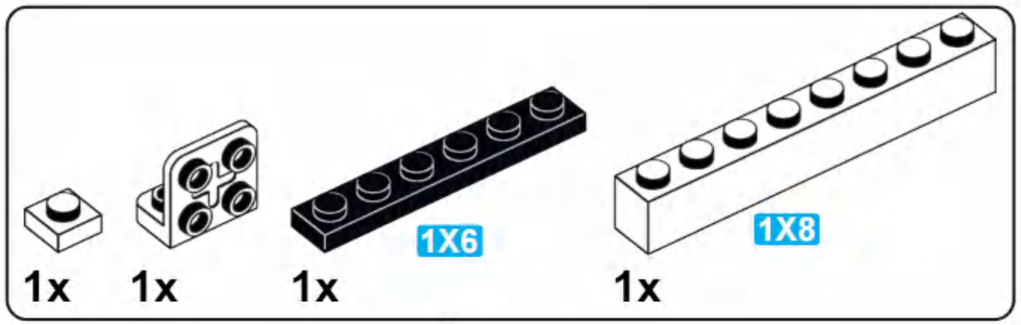

222

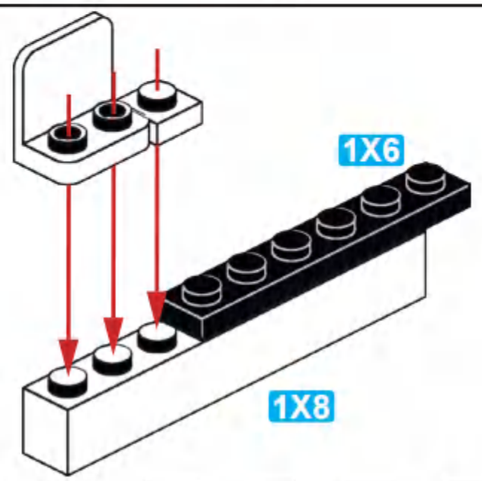

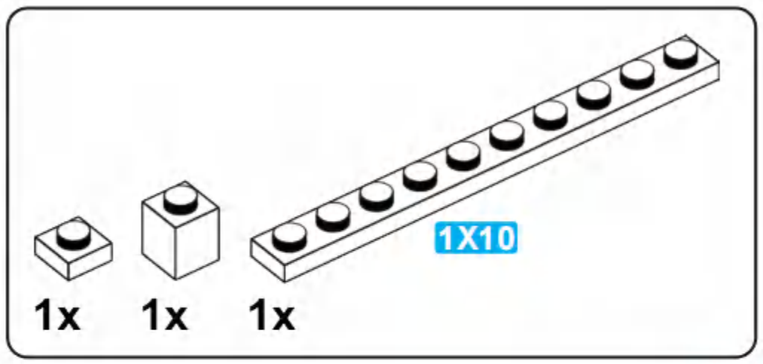

223

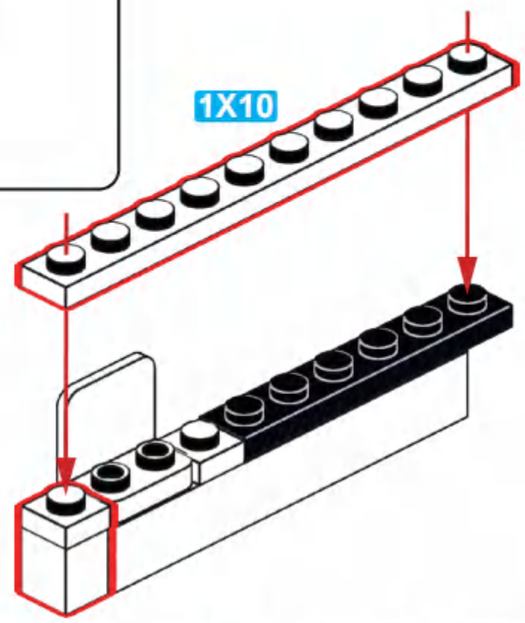

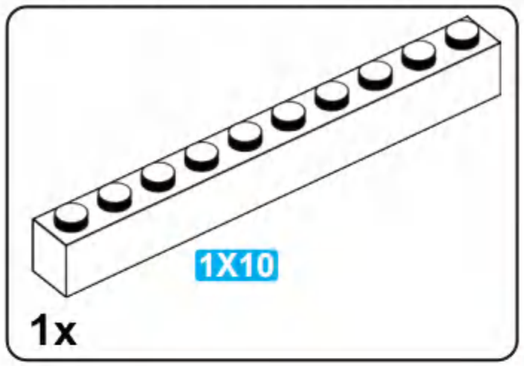

224

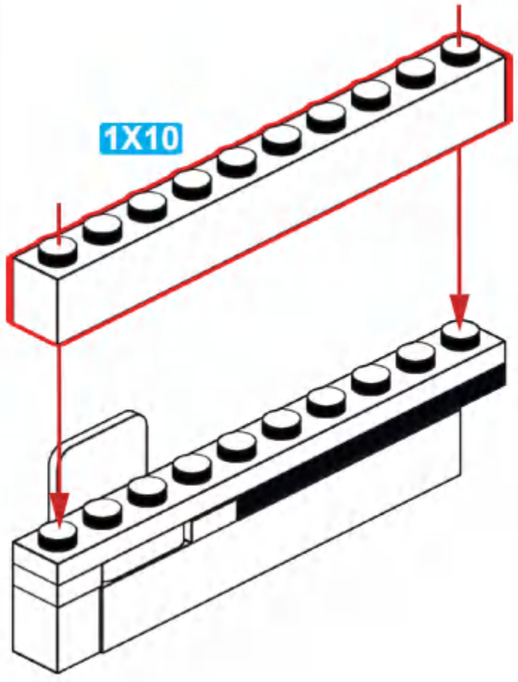

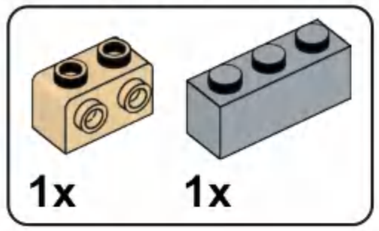

225

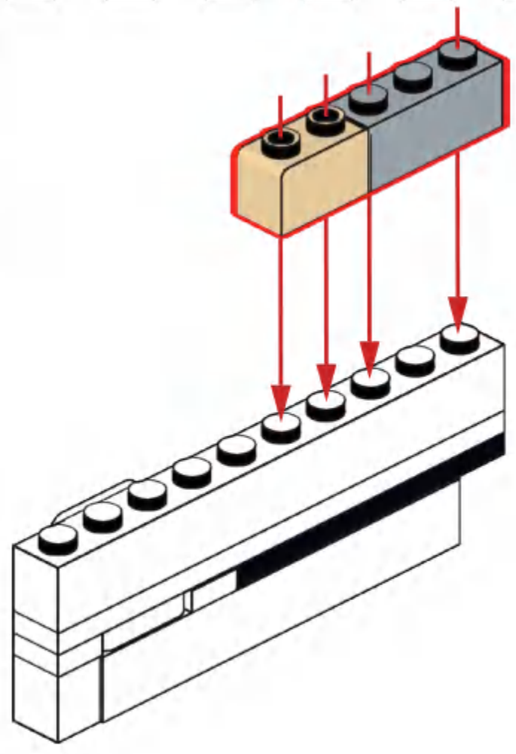

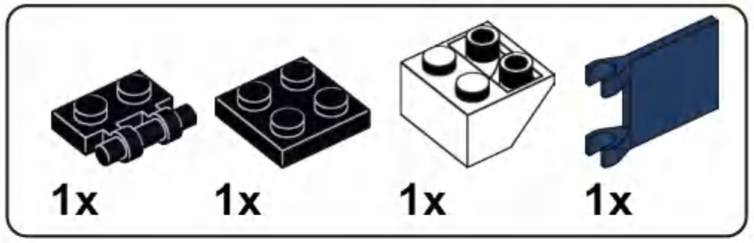

226

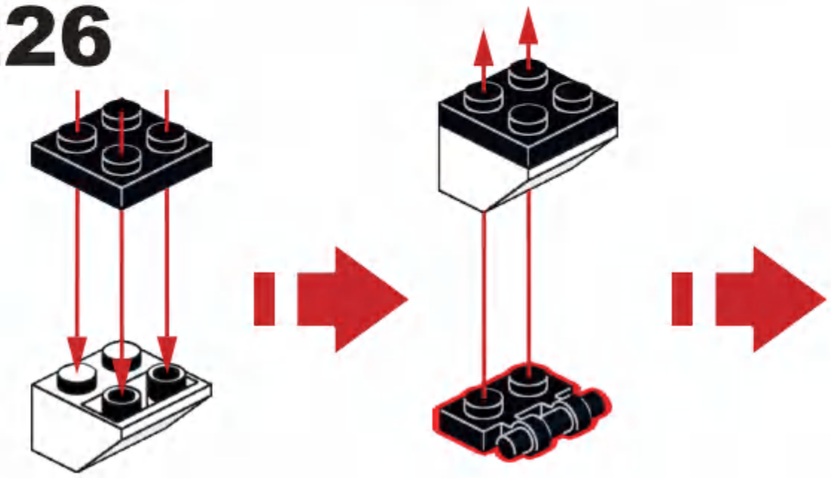

227

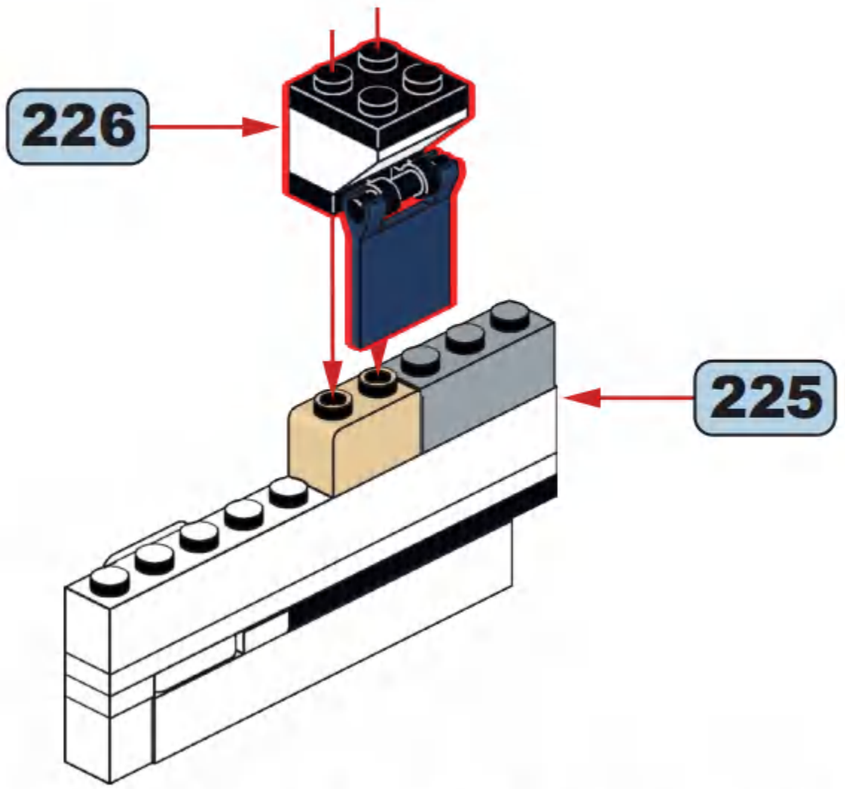

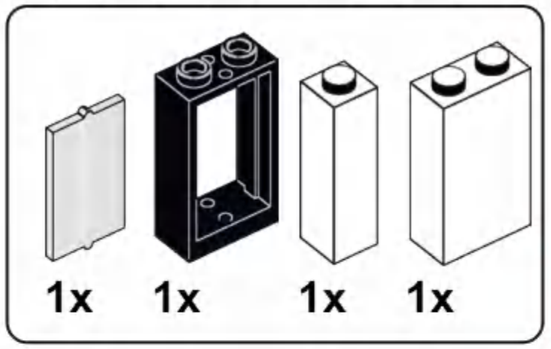

228

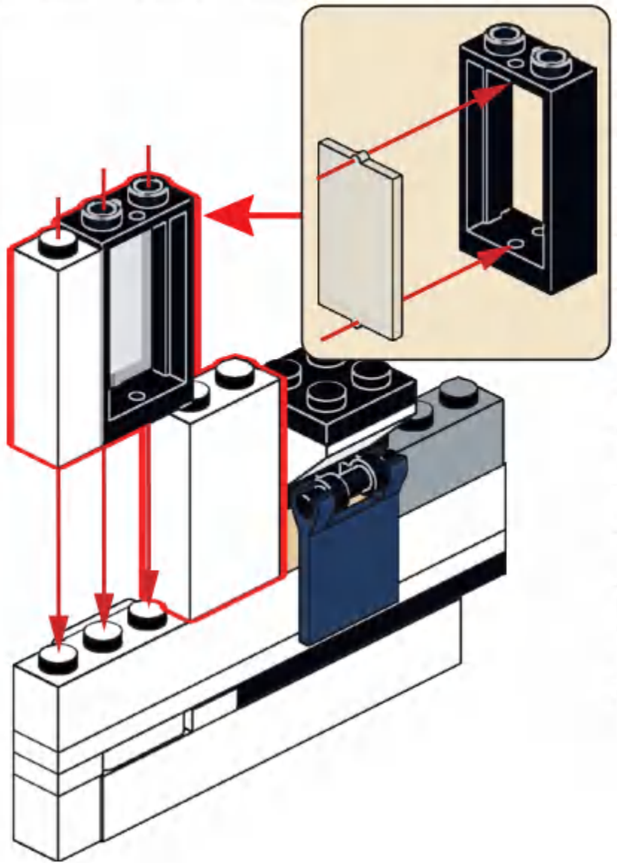

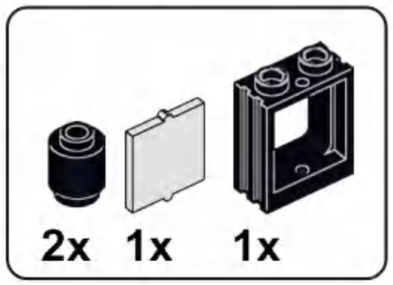

229

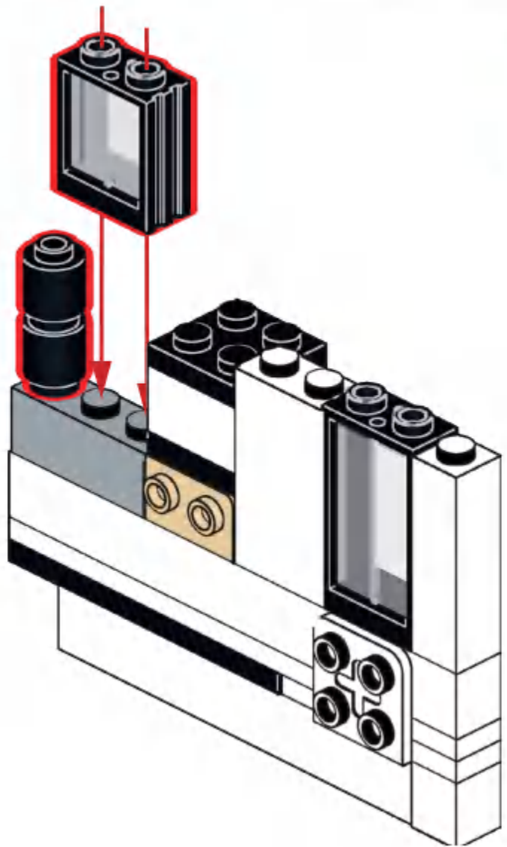

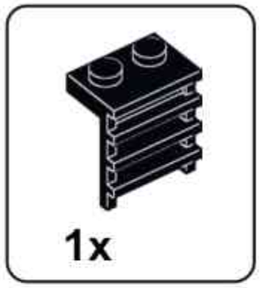

230

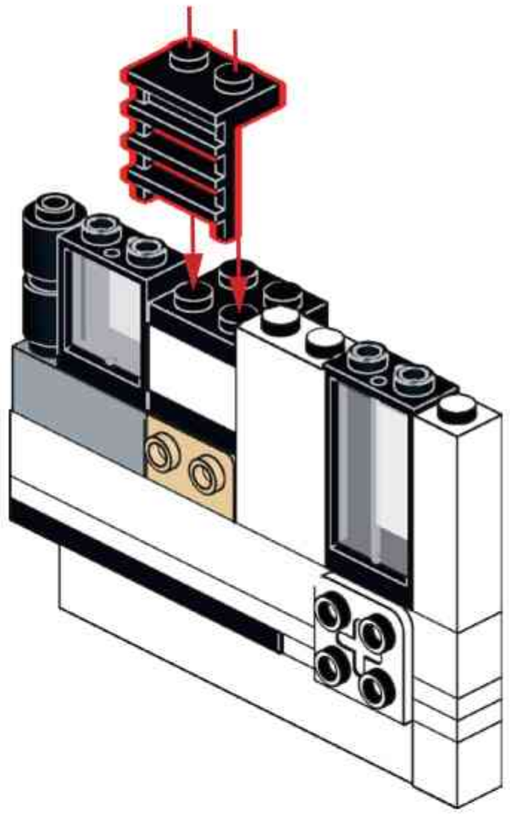

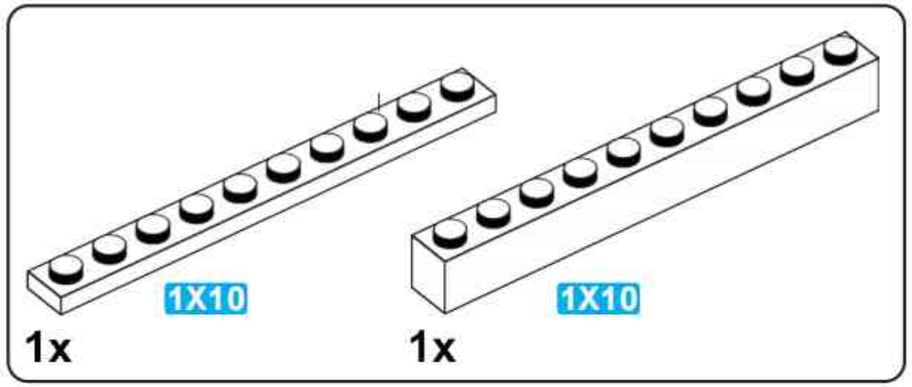

231

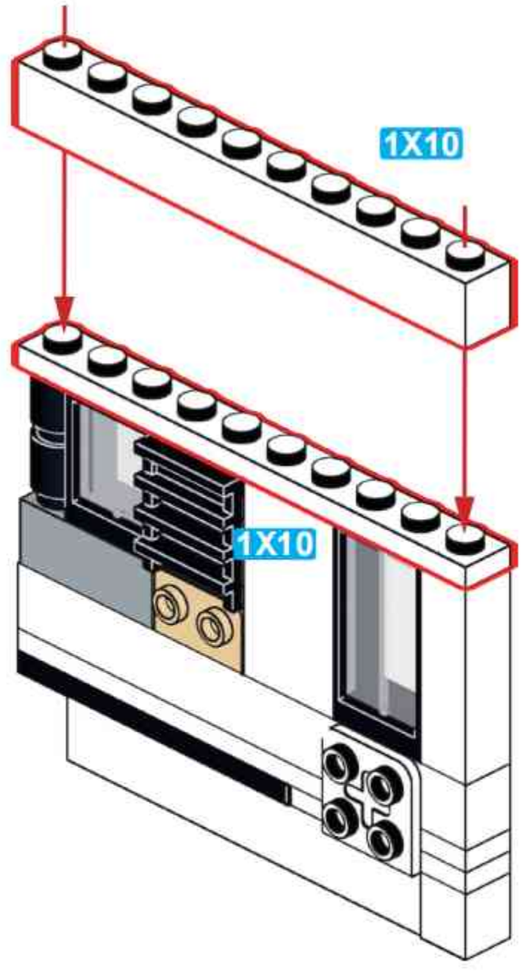

232

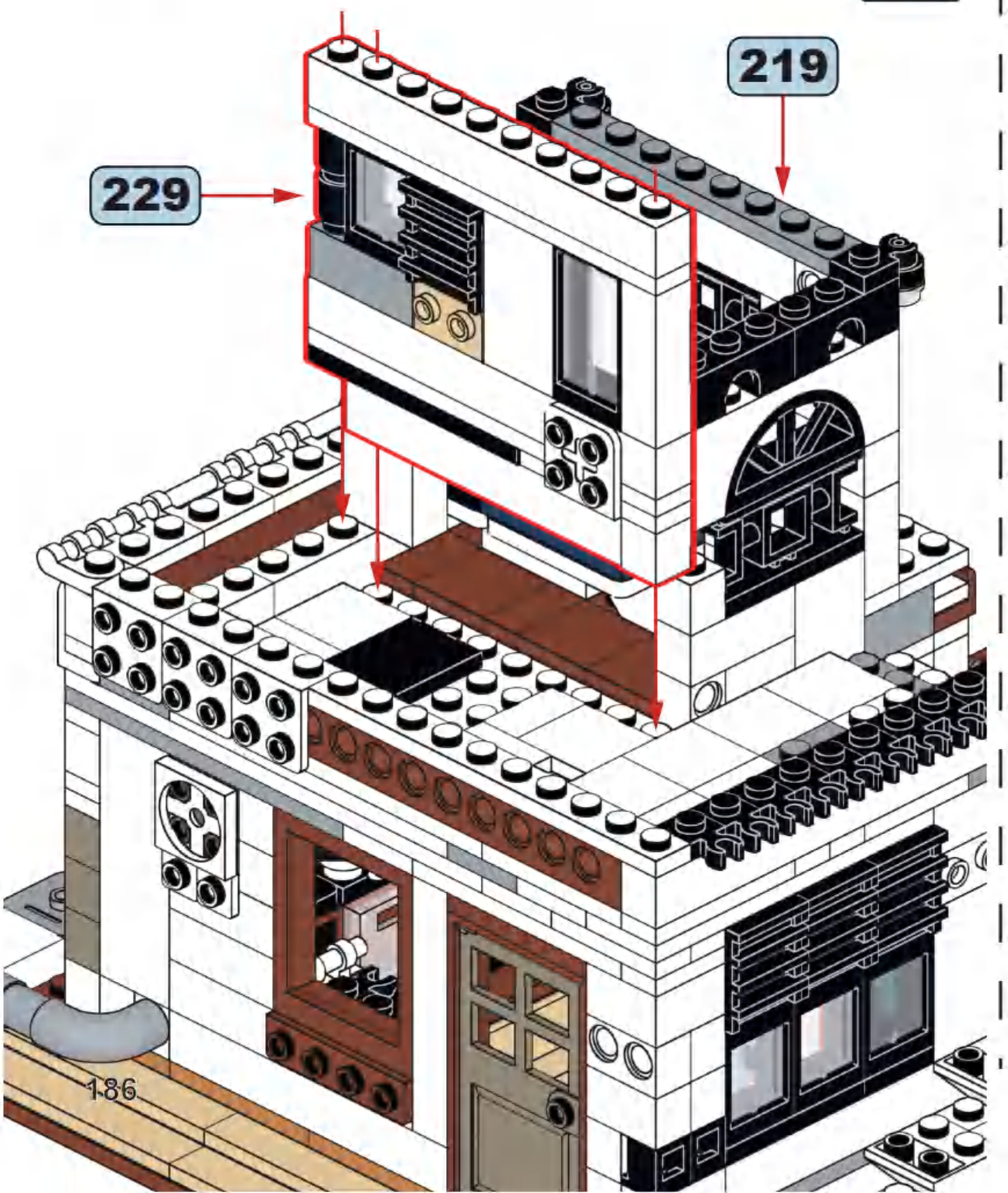

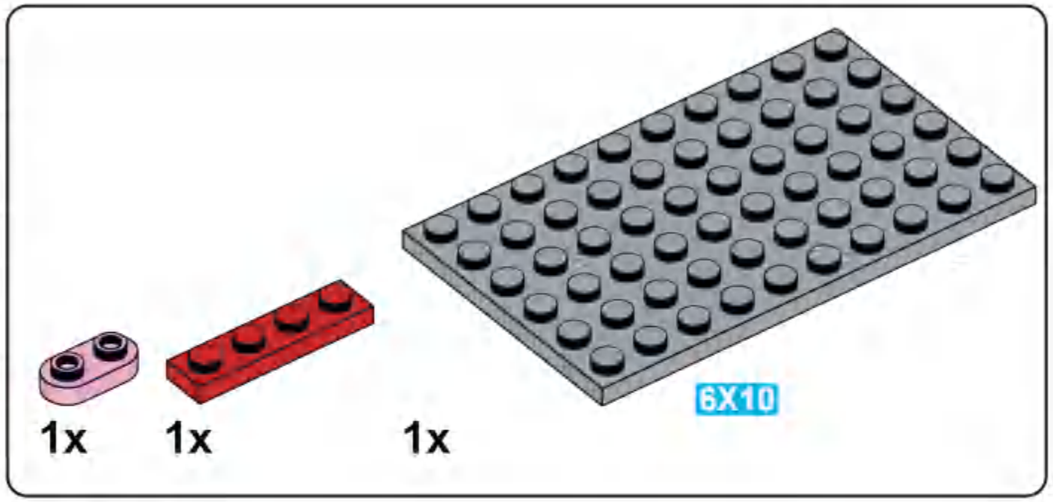

233

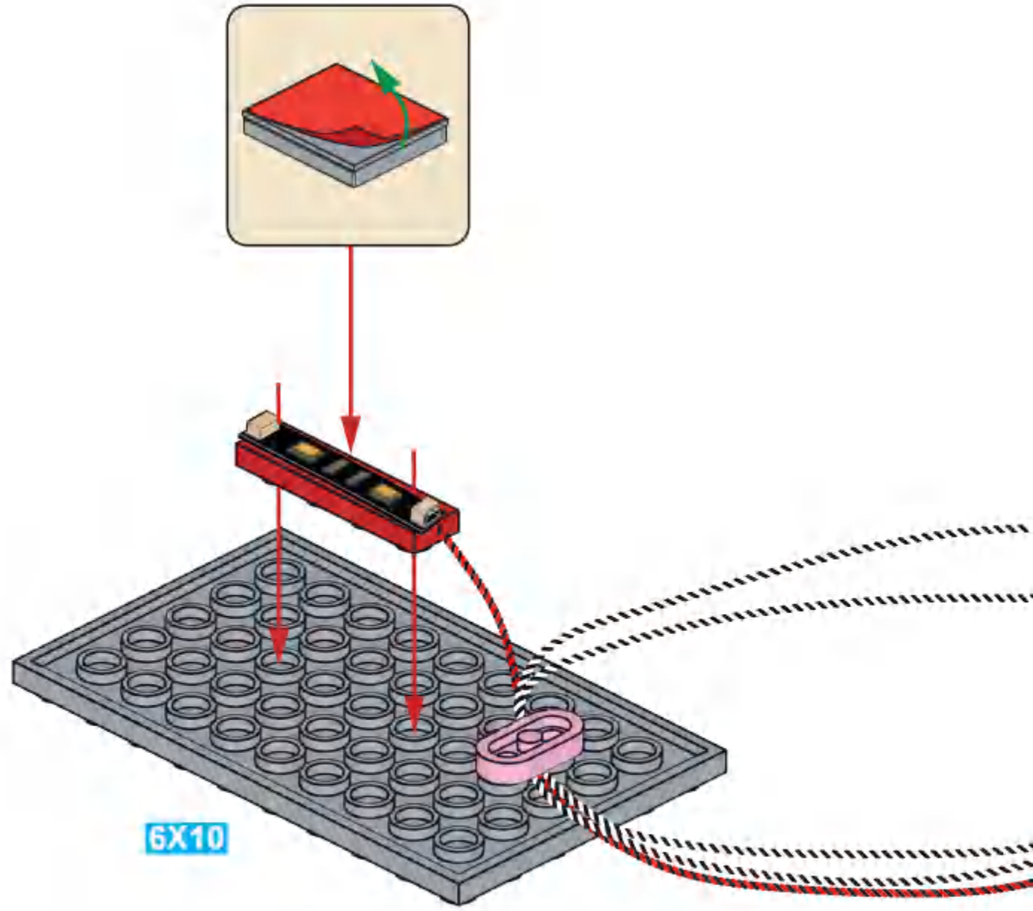

234

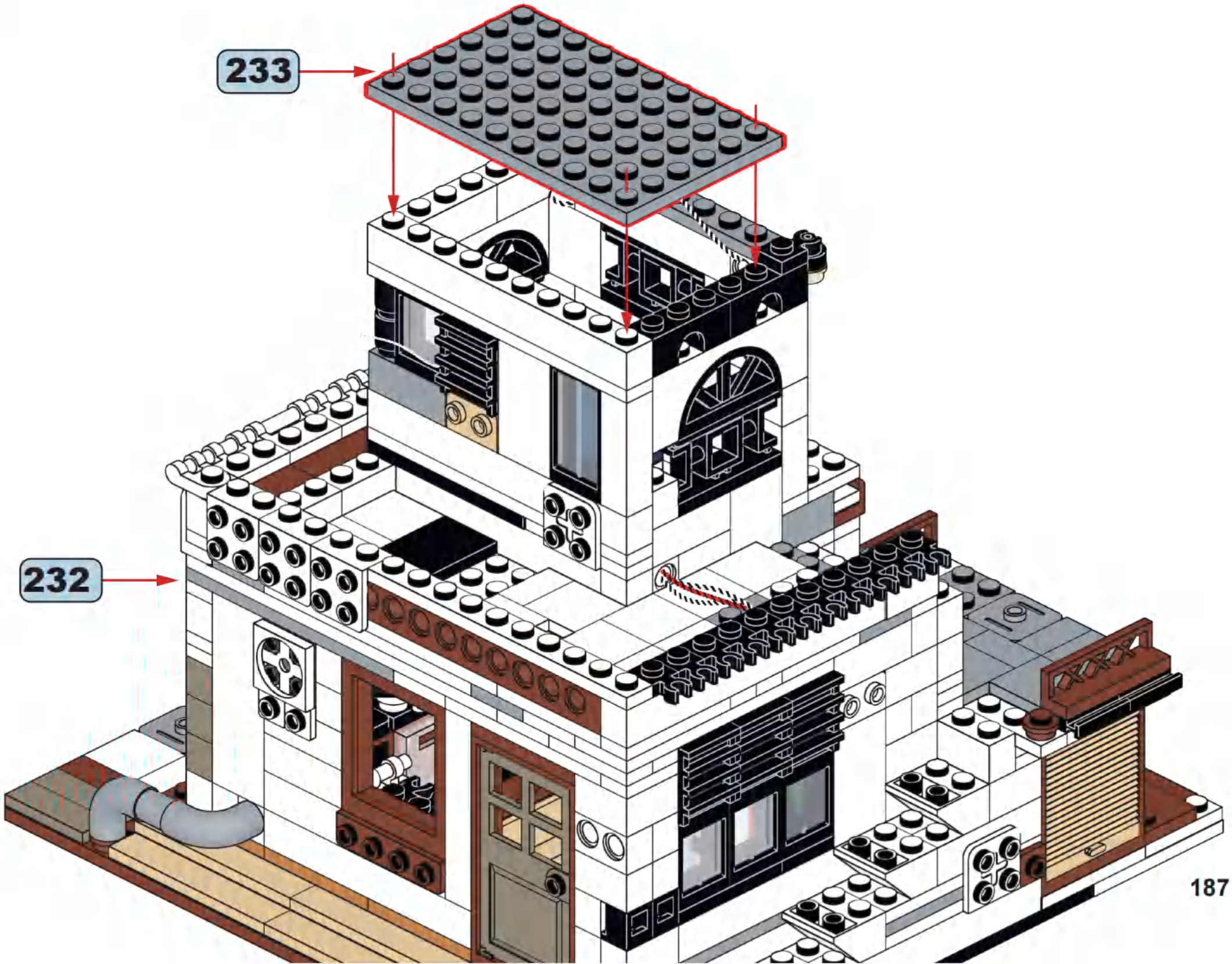

1x 1x

235

1x 1x

236

2x 2x 2x

237

x2

1x 1x 1x

238

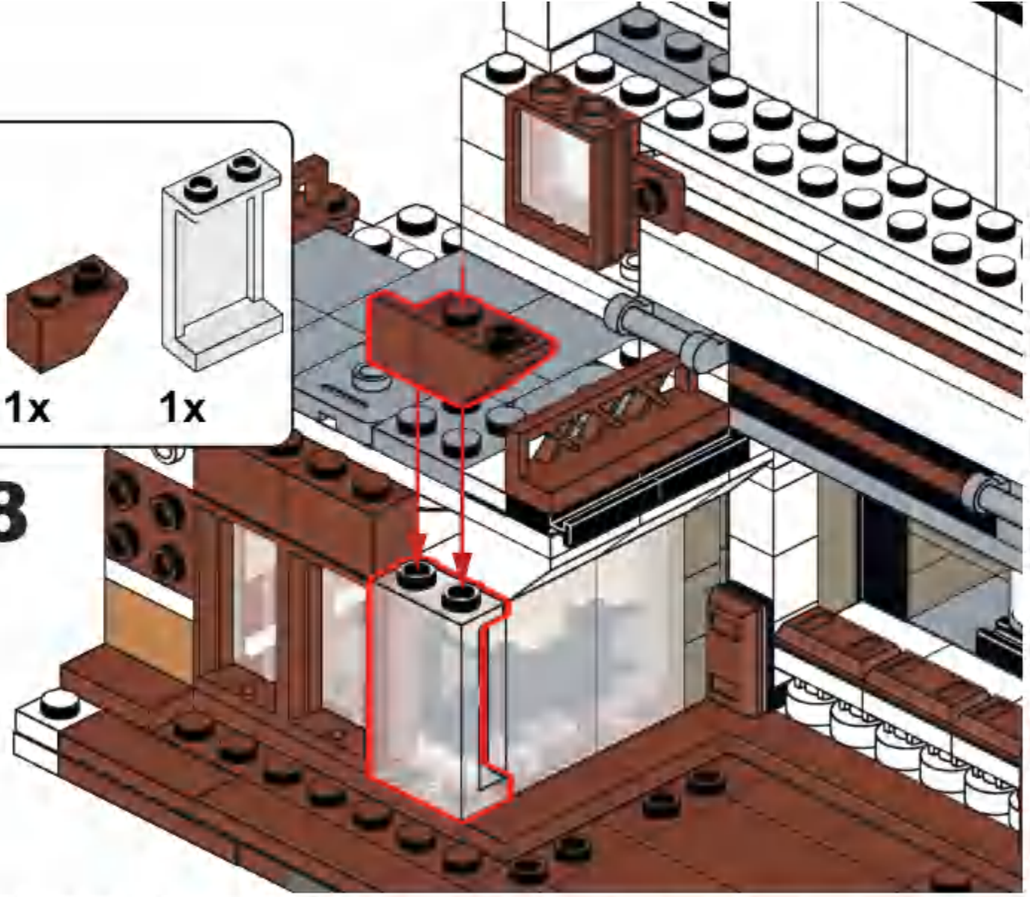

1x

239

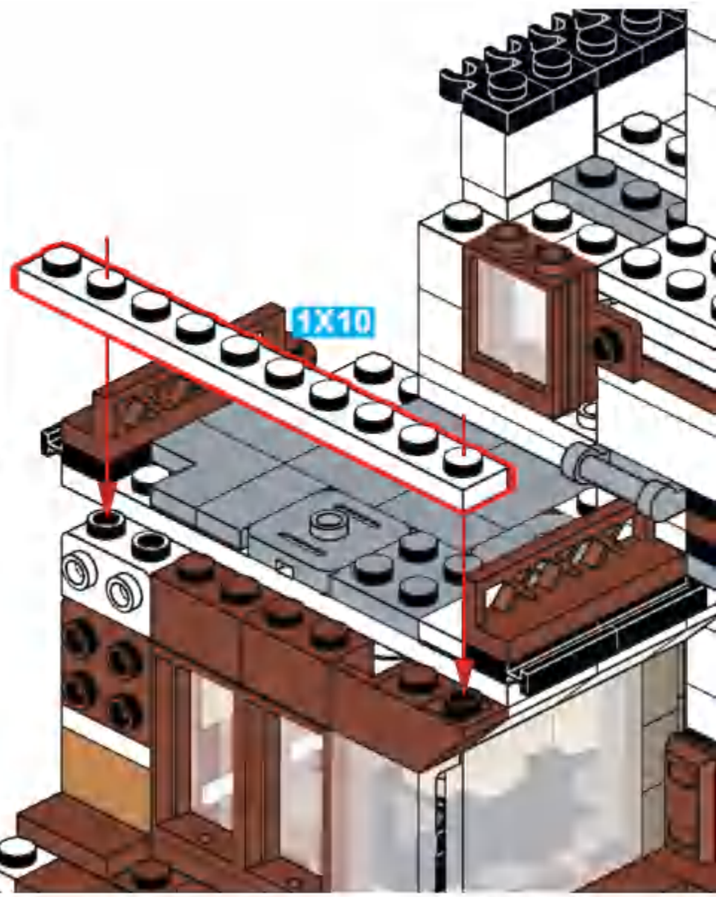

5x

240

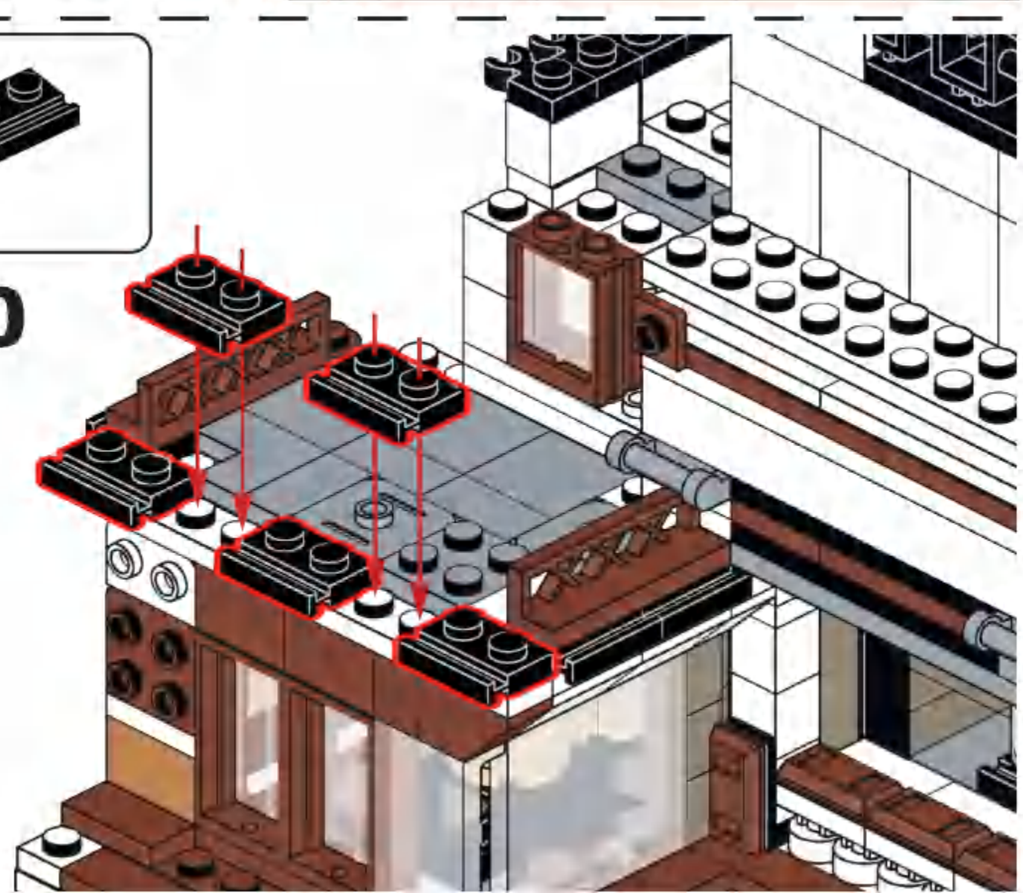

2x 2x

241

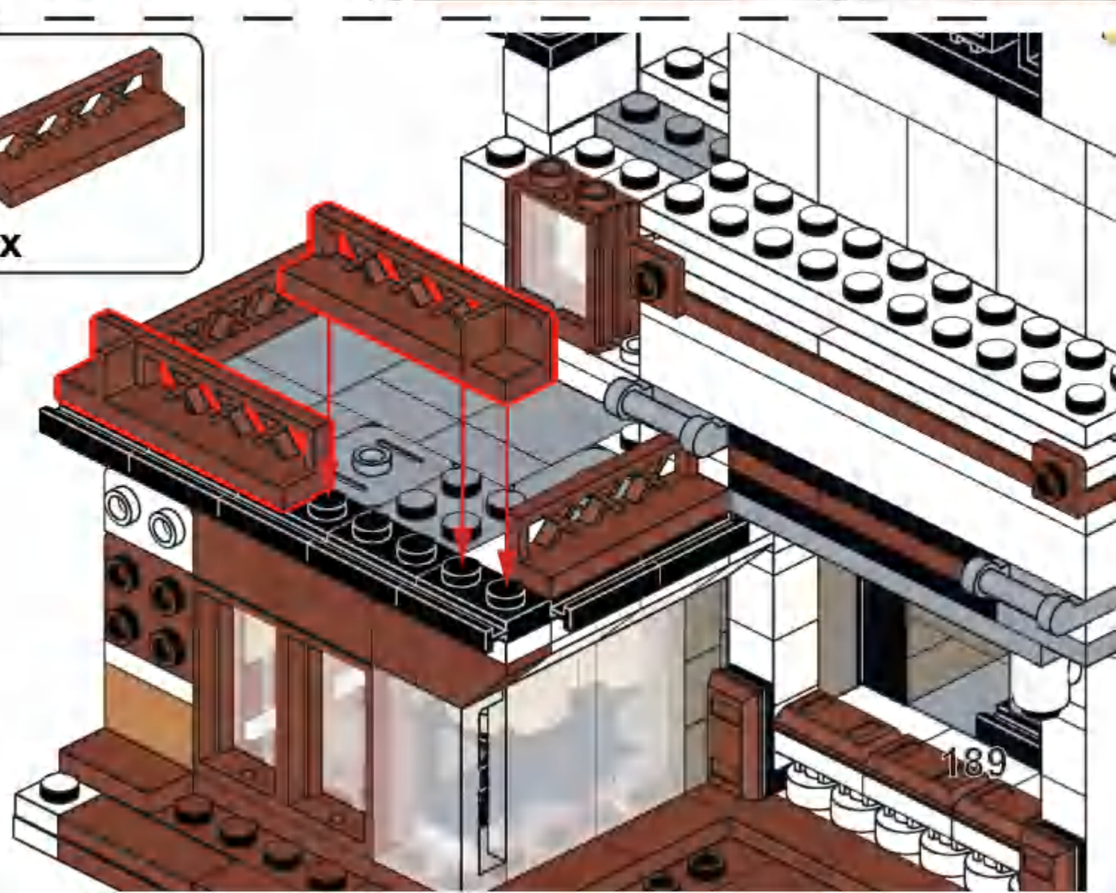

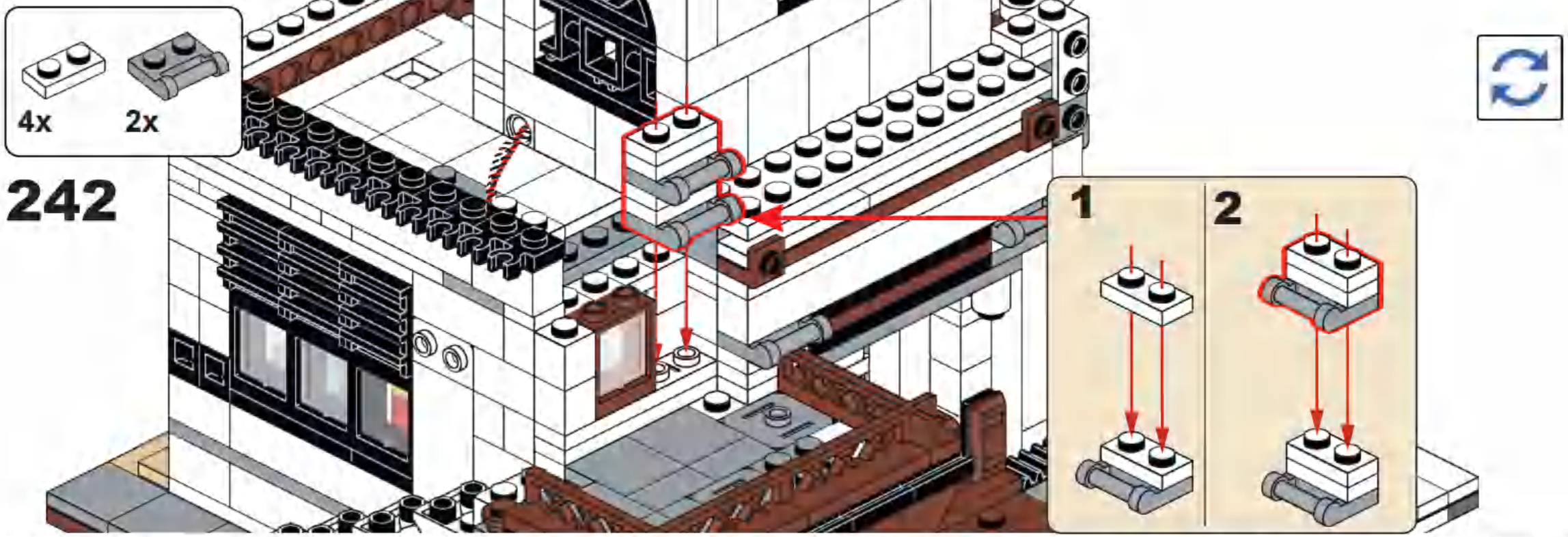
4x
2x
242
1
2

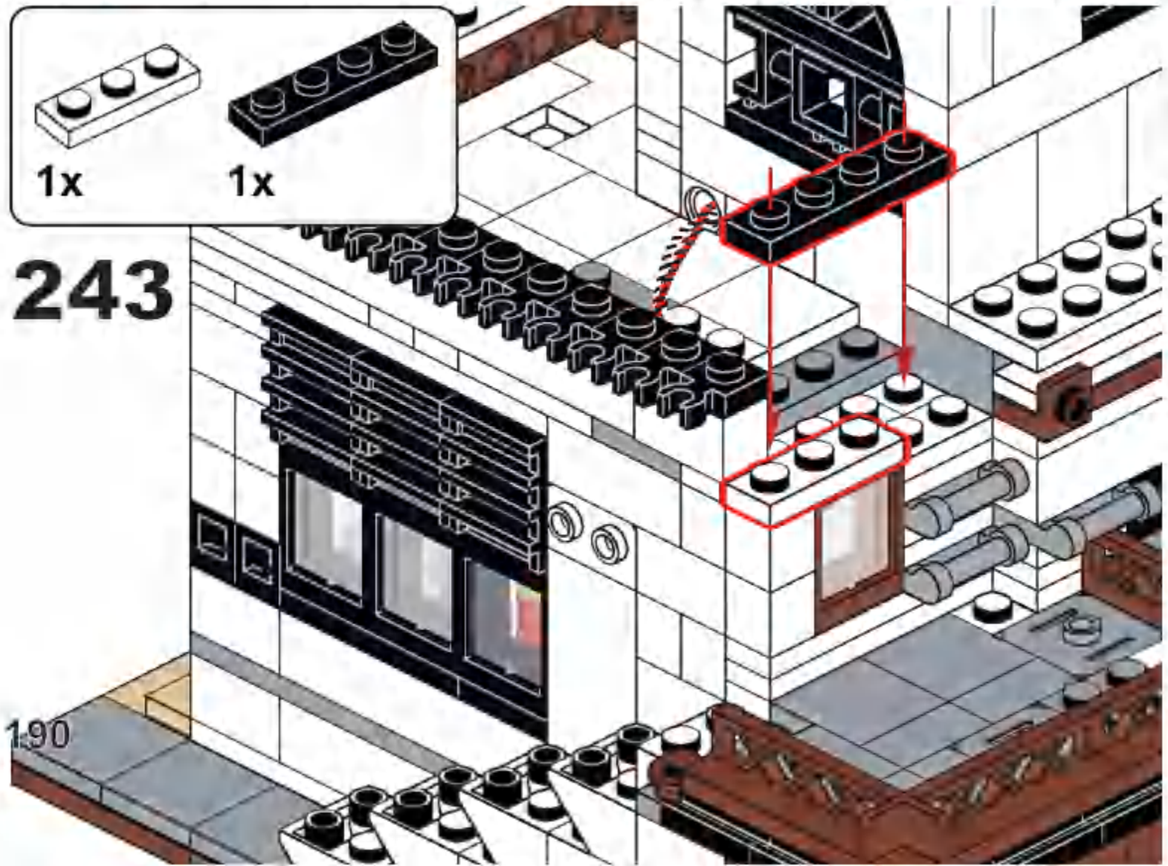
1x
1x
243

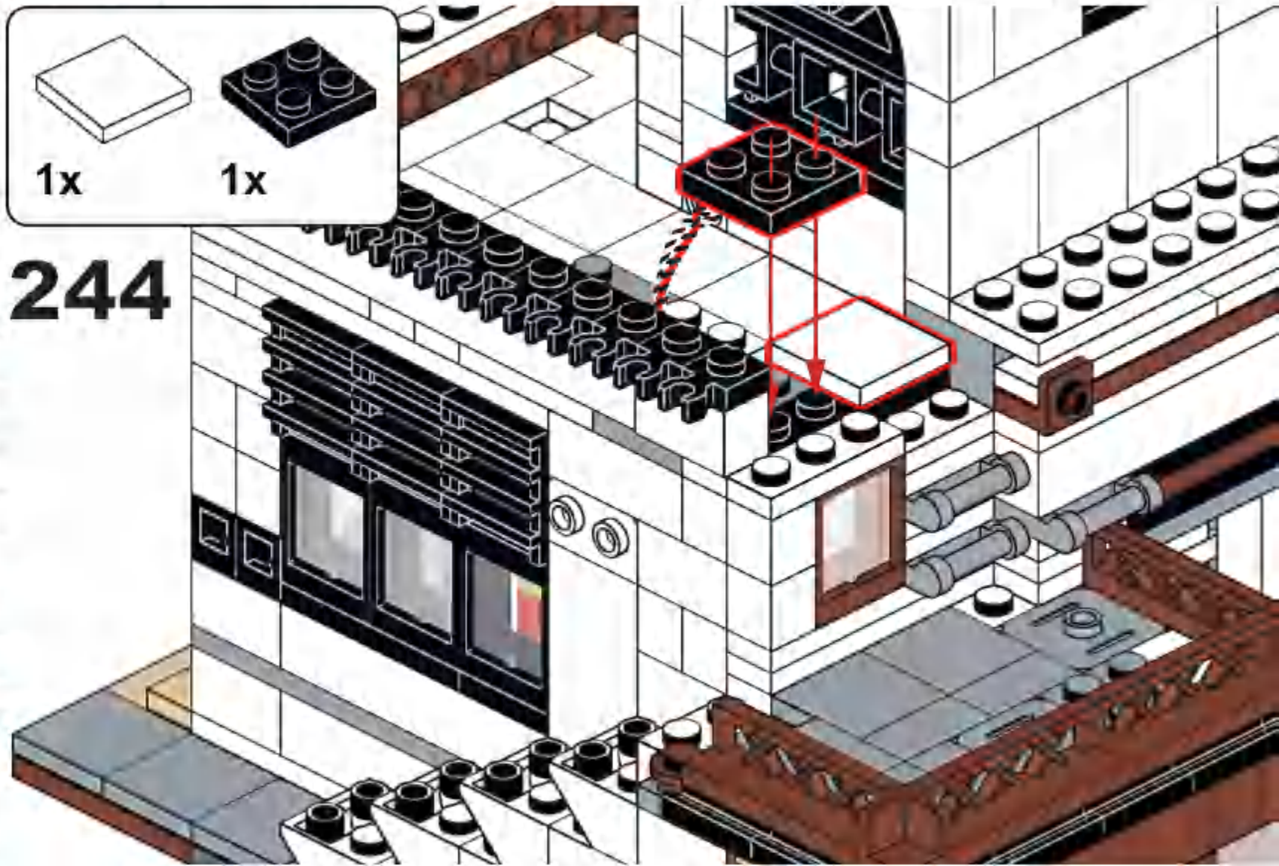
1x
1x
244

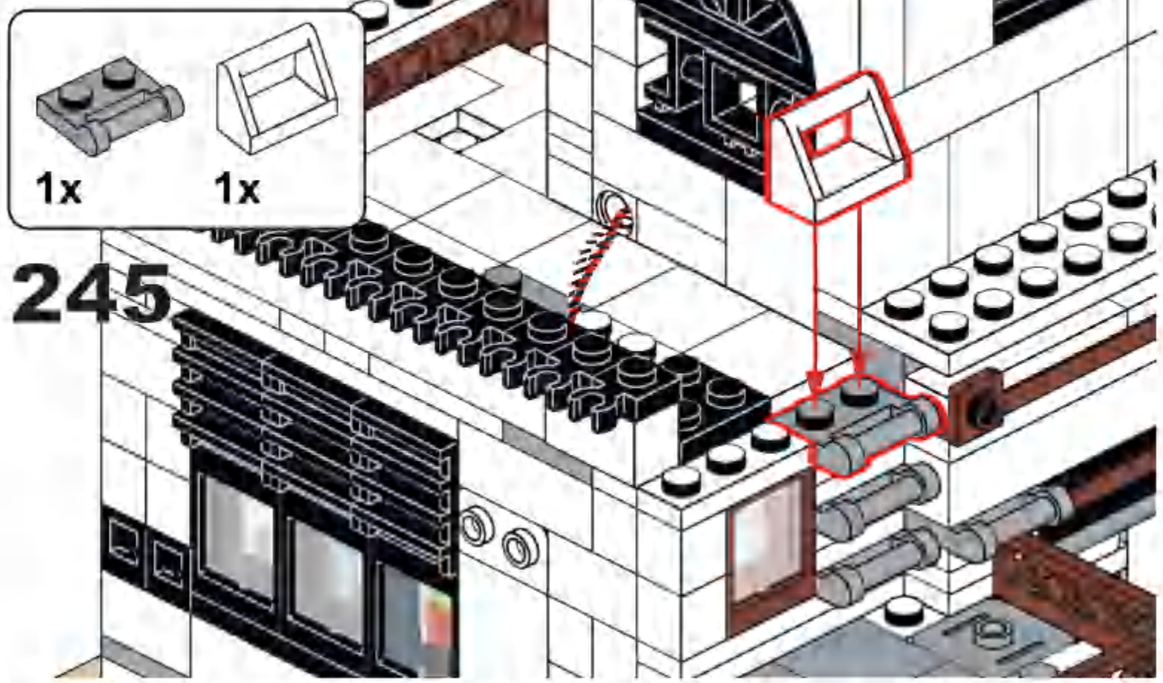
1x
1x
245

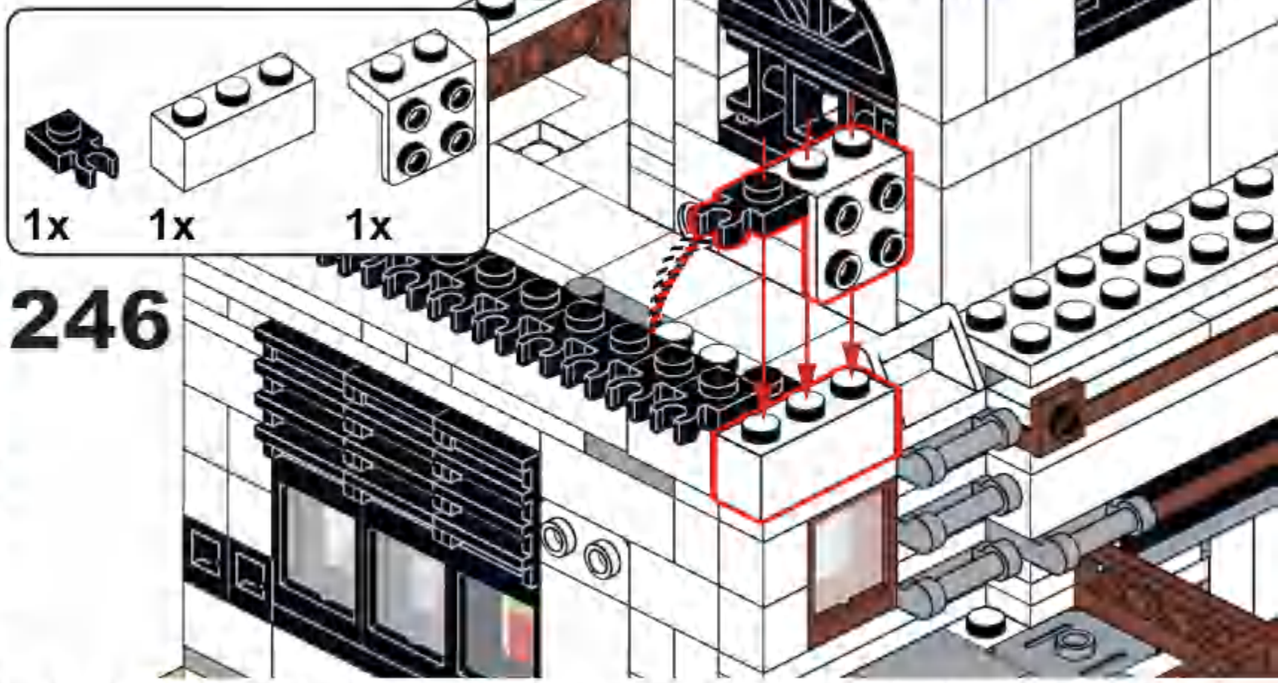
1x
1x
1x
246

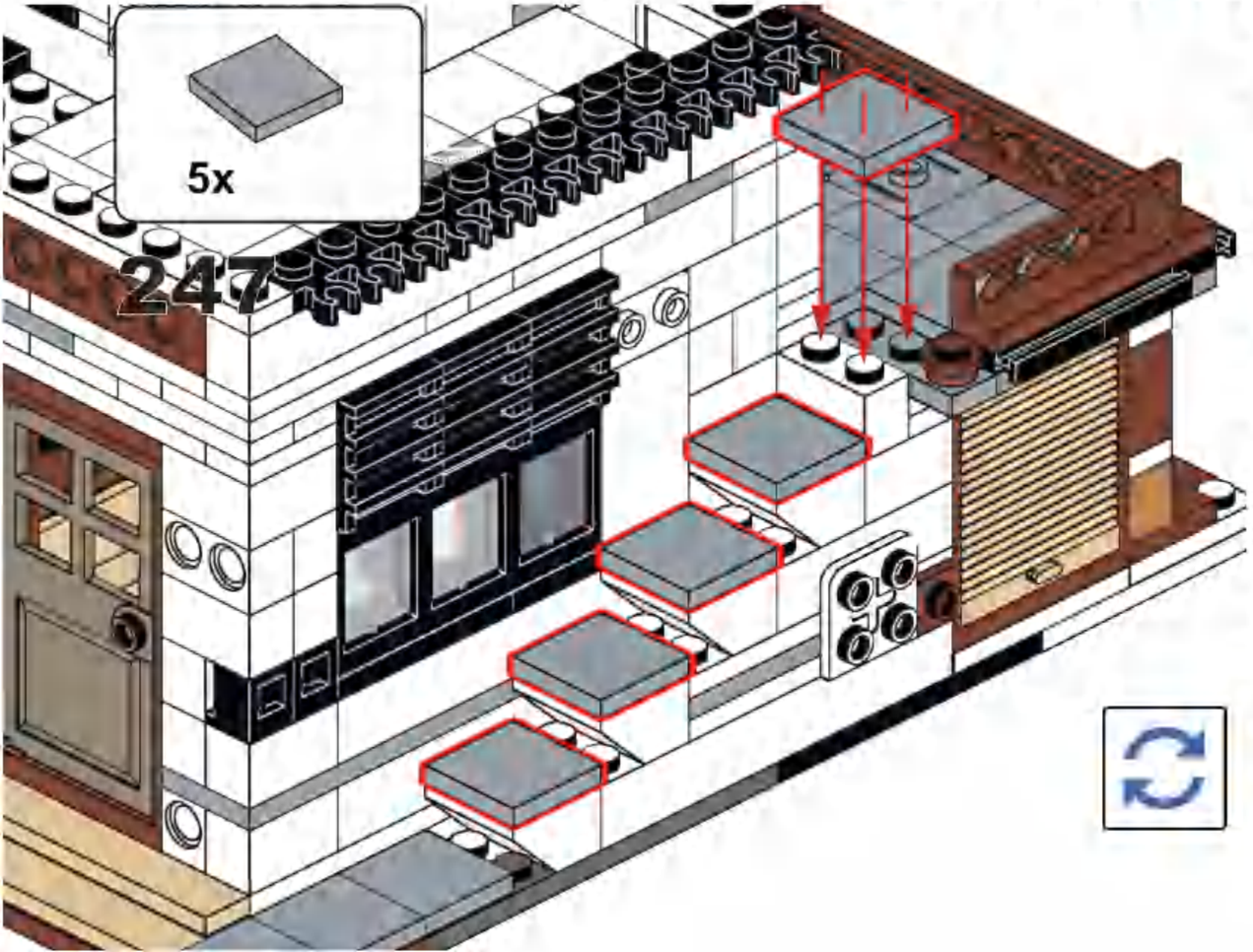
5x
247

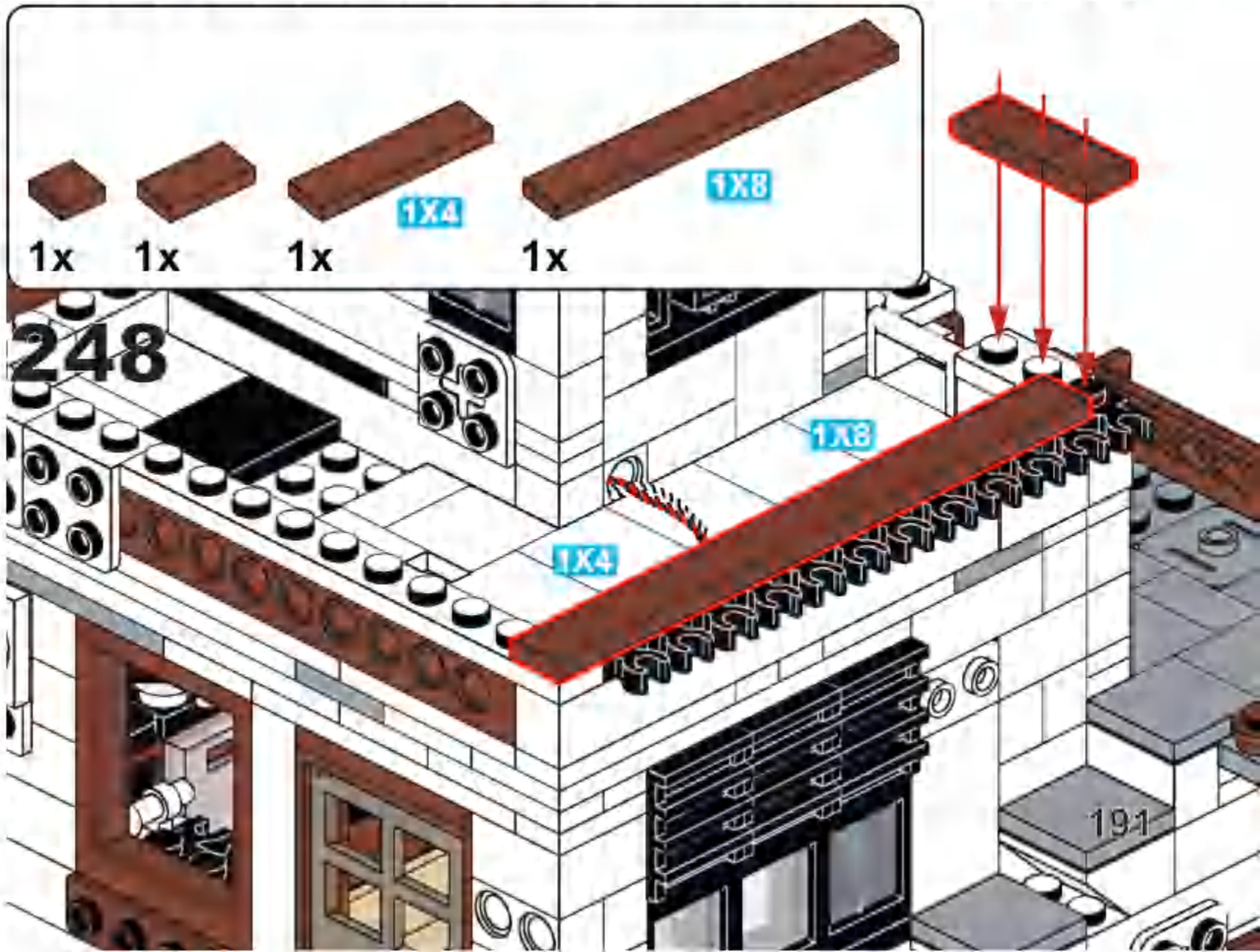
1x
1x
1x
1X4
1x
1X8
248
1X8
1X4
191

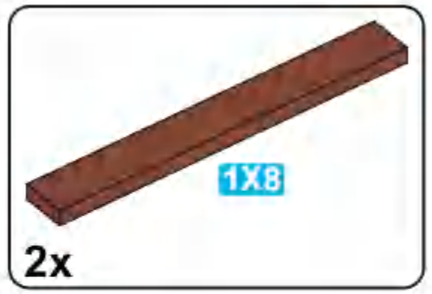

249

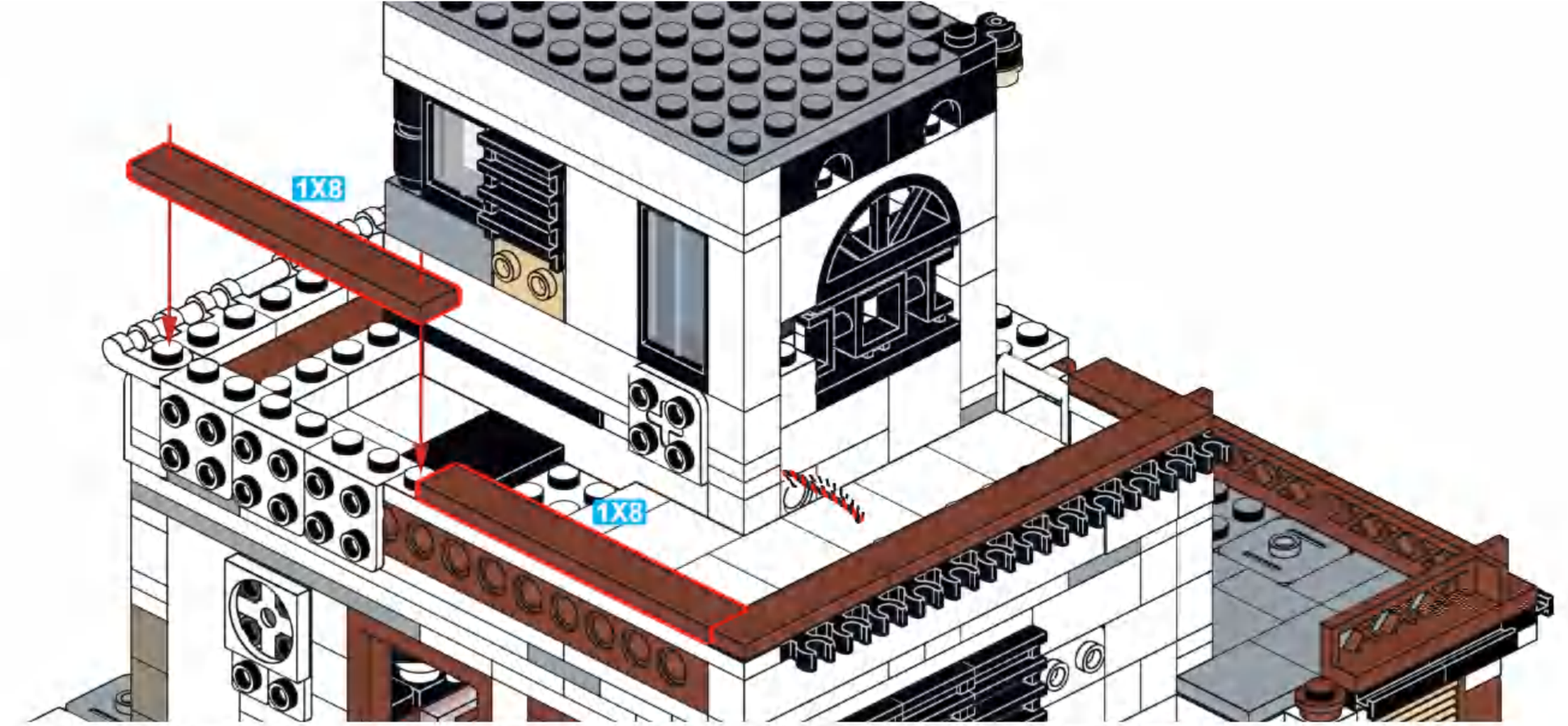

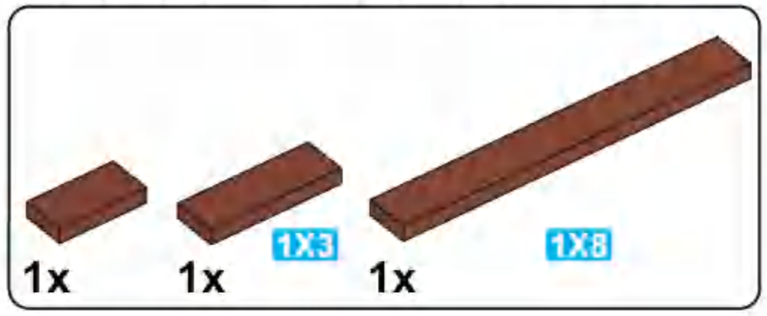

250

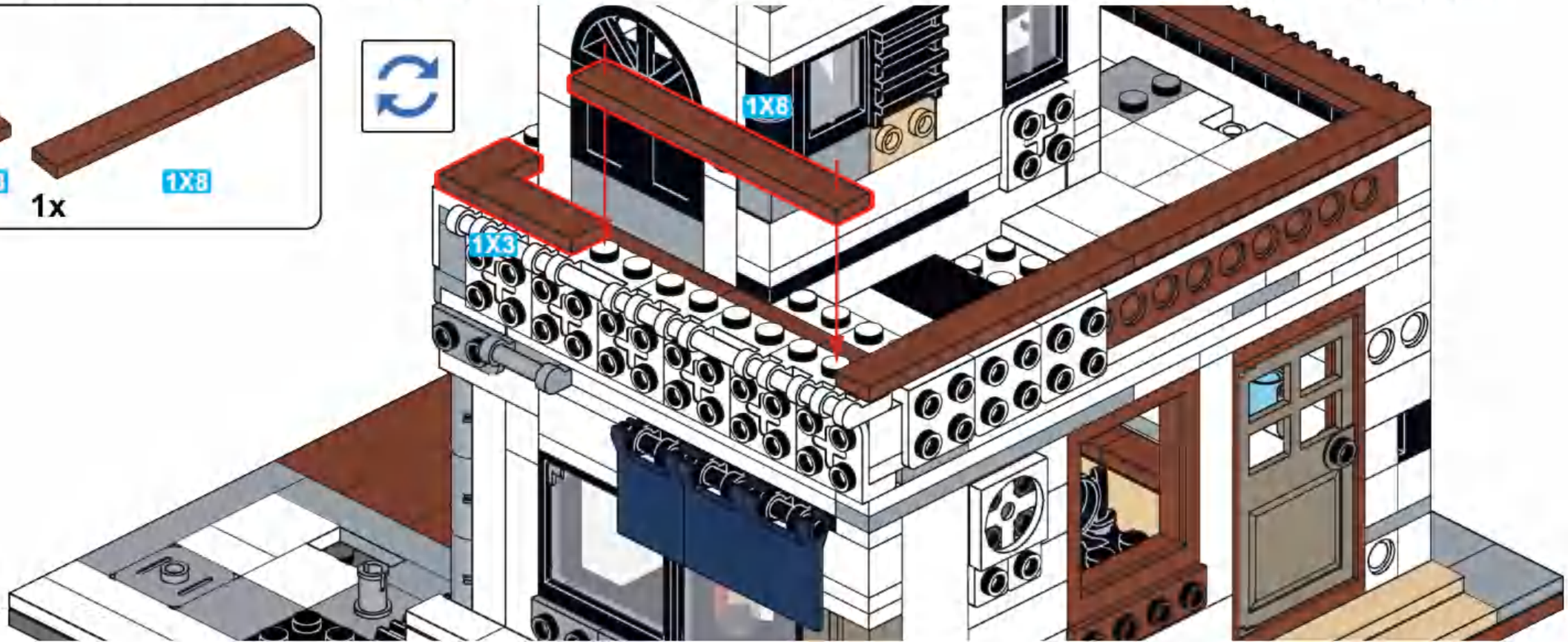

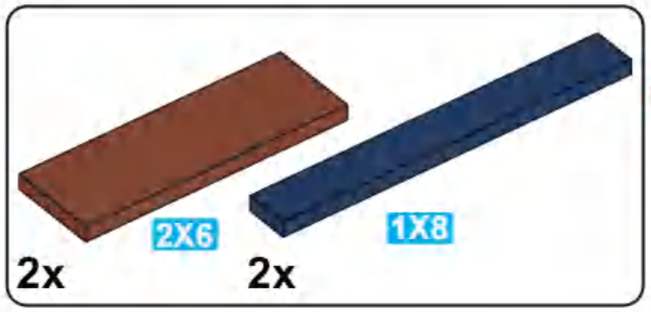

251

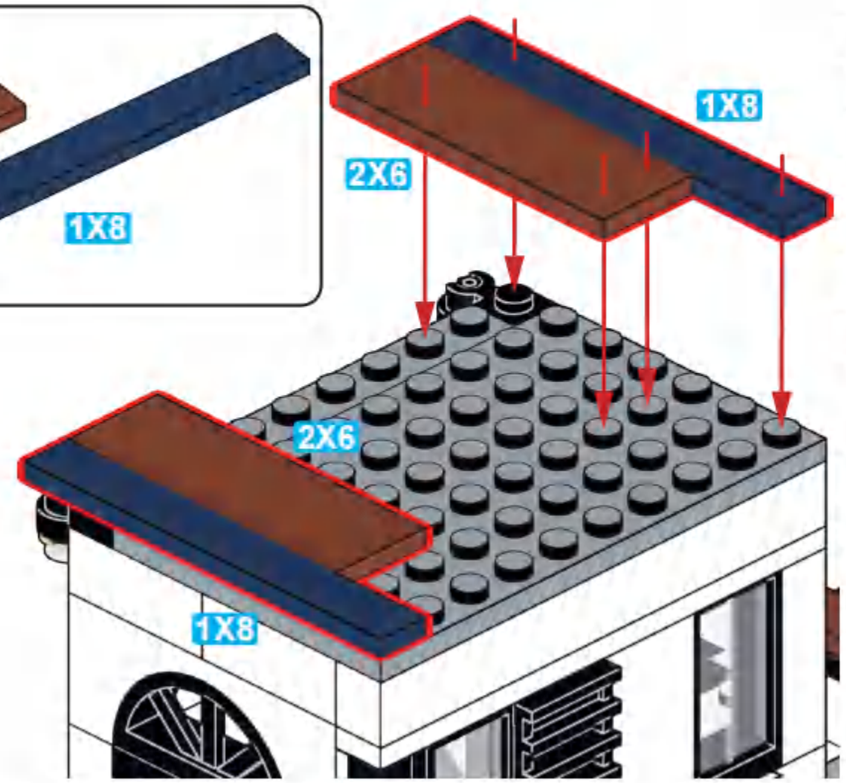

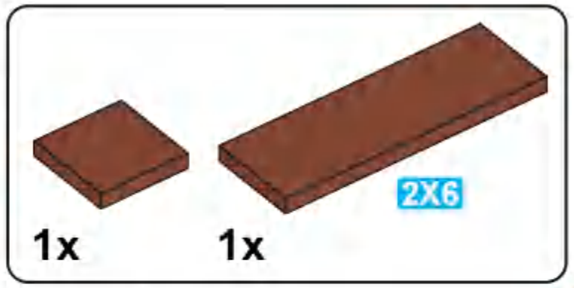

252

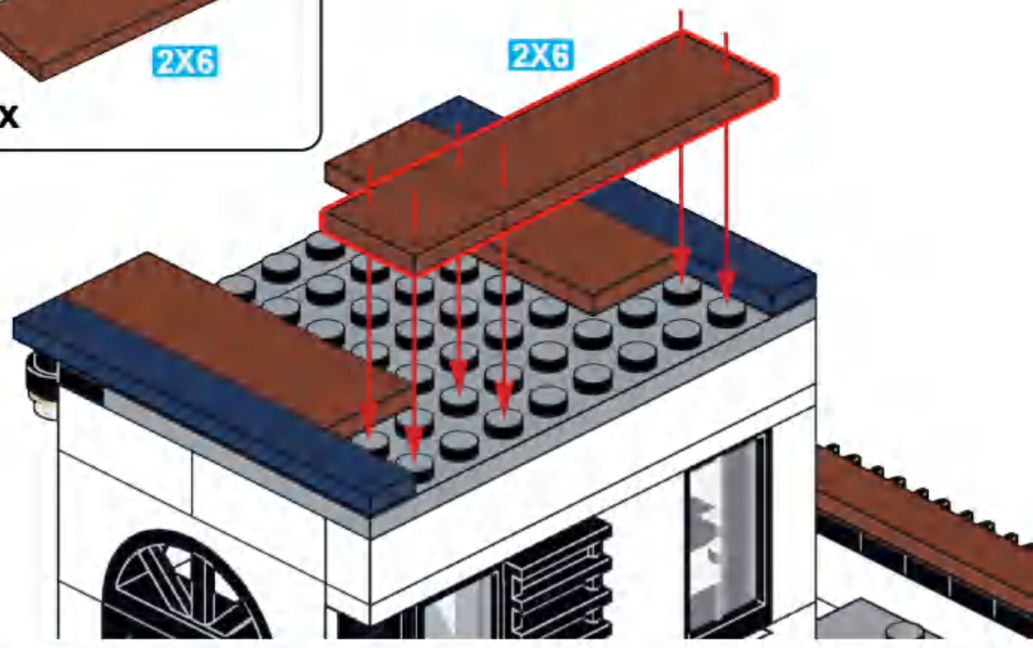

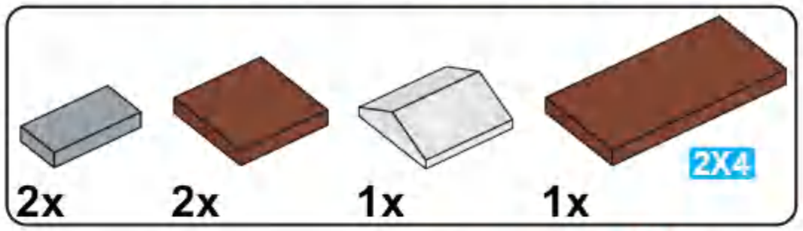

253

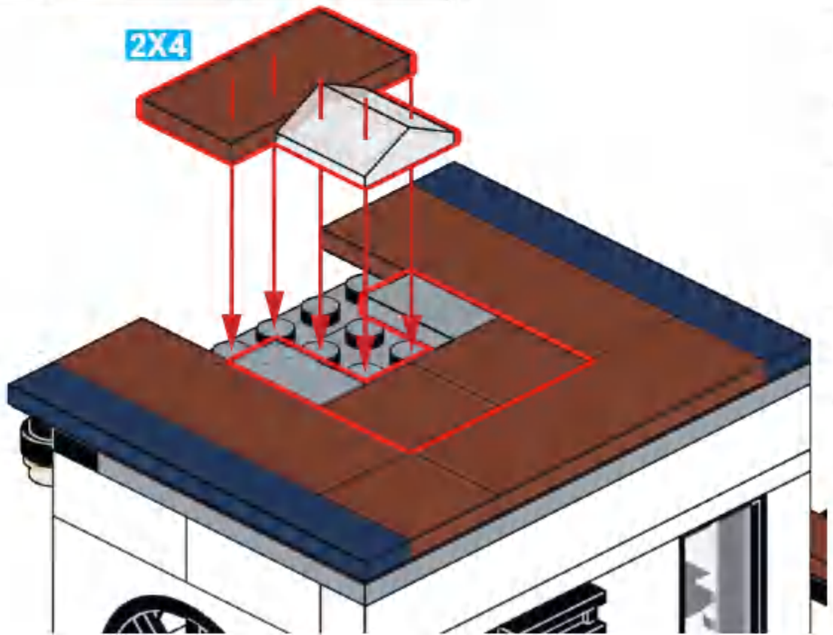

254

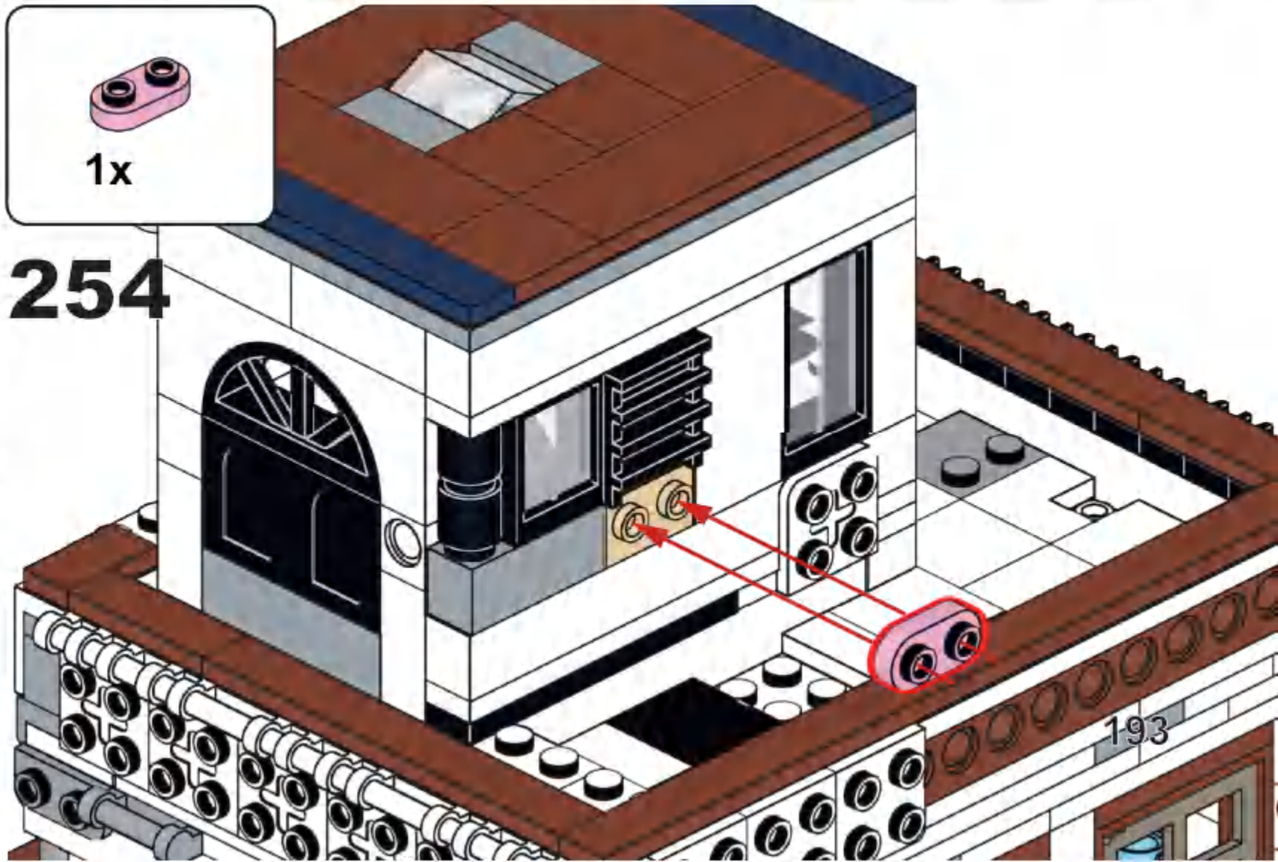

255

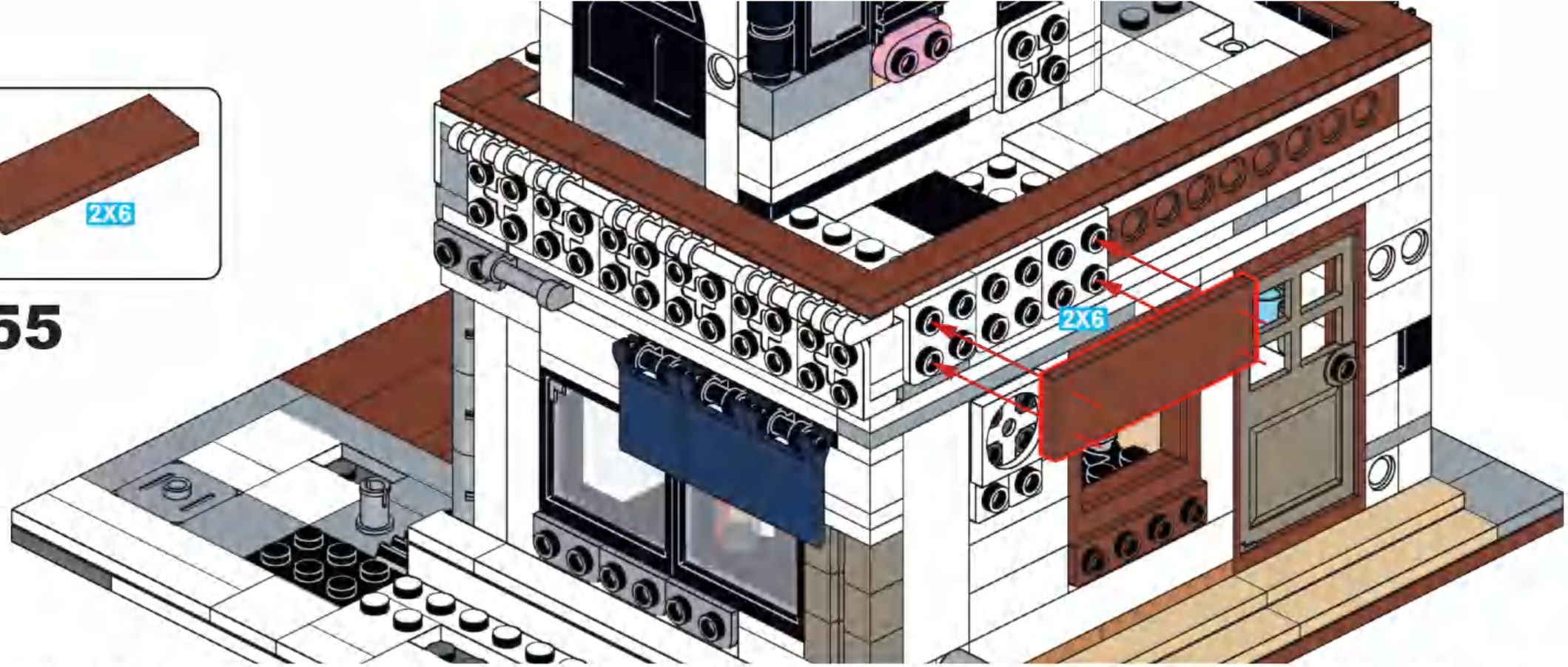

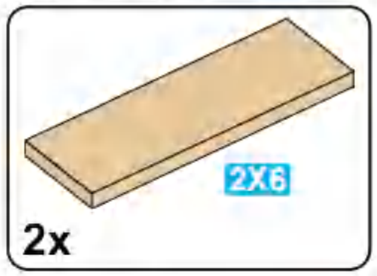

256

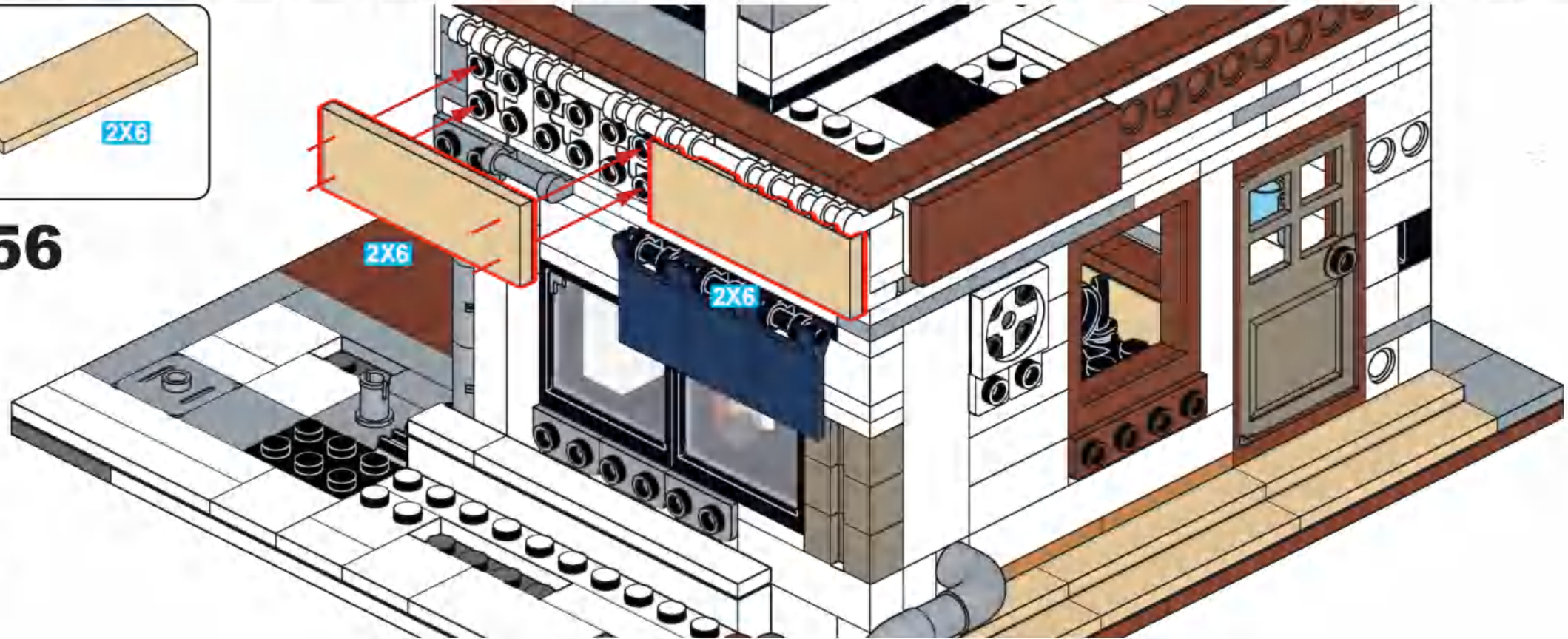

4x

257

1x 1x

258

1x 1x

259

1x

260

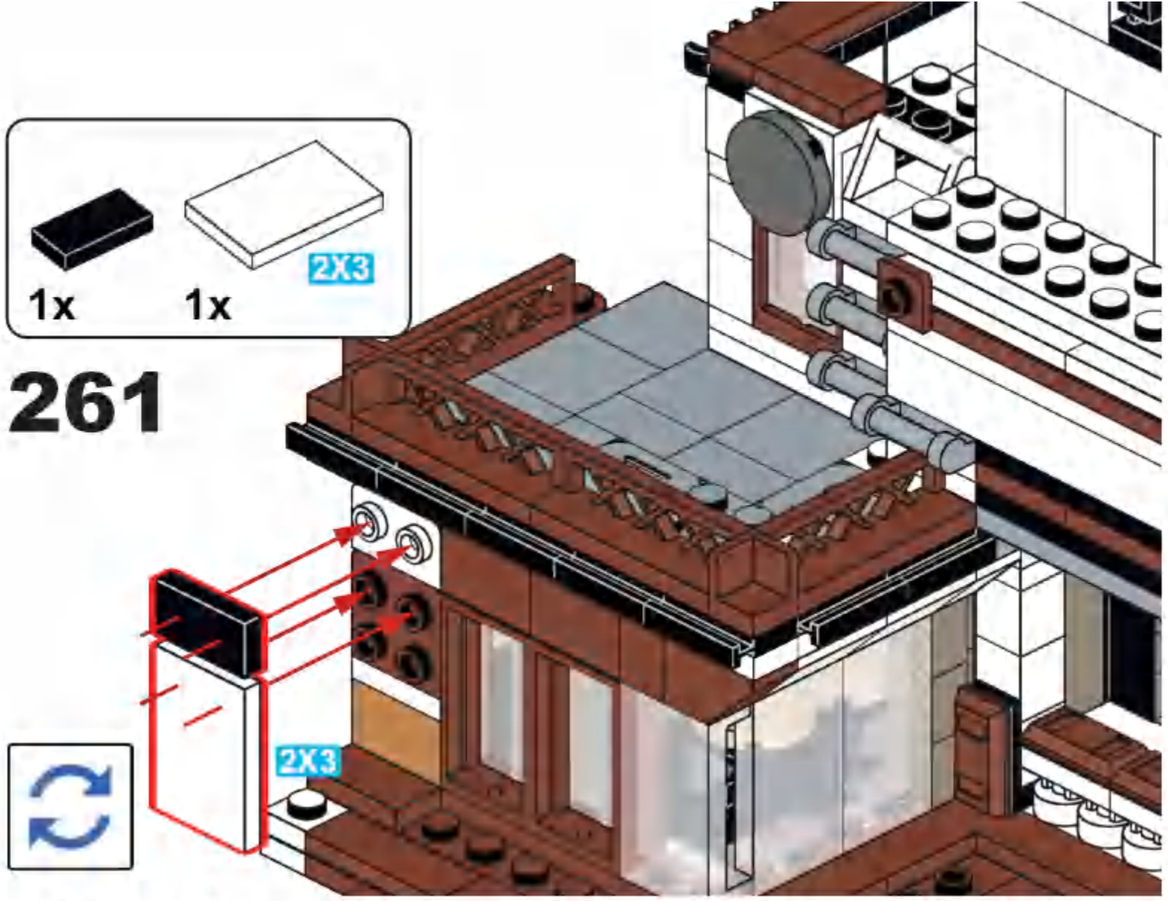

261

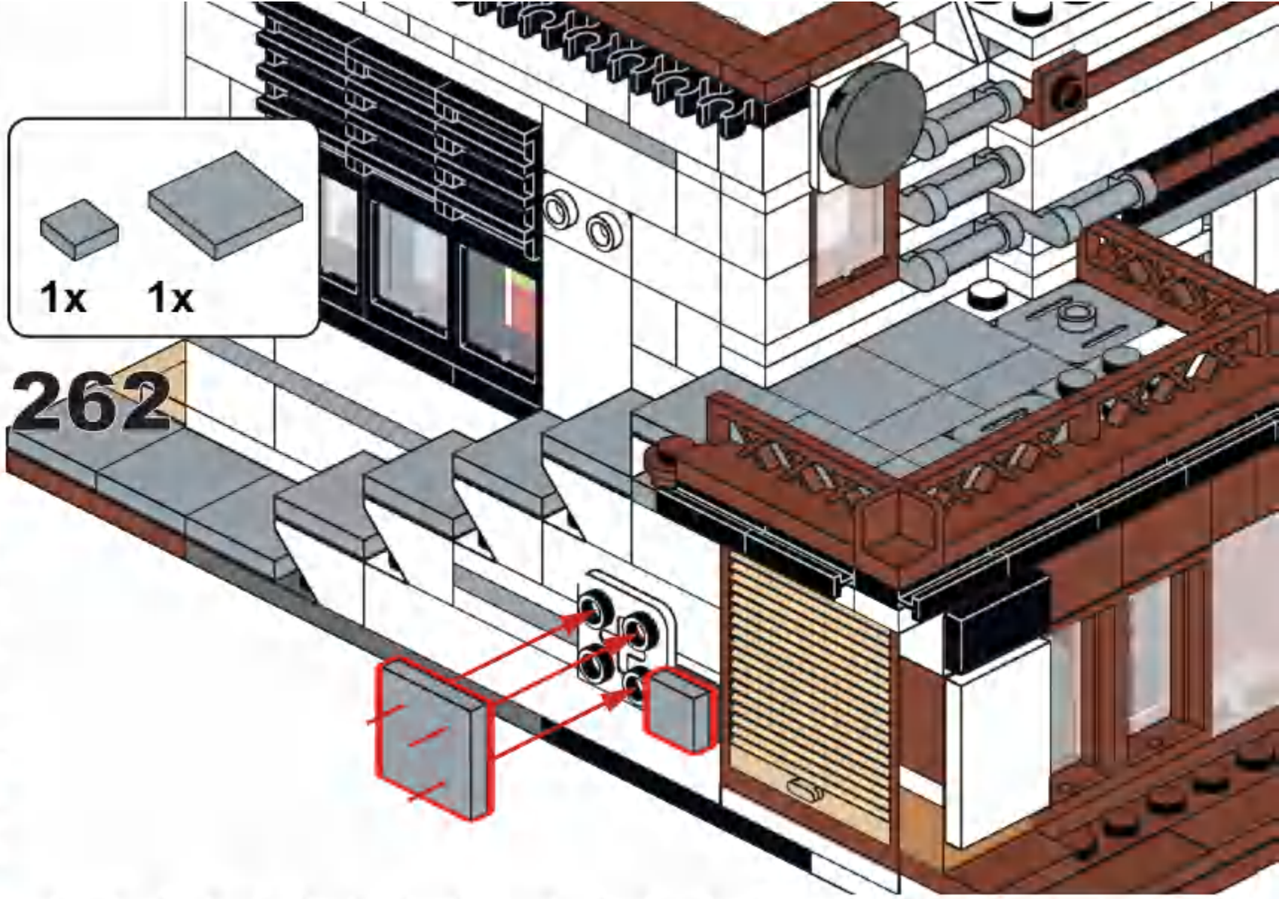

262

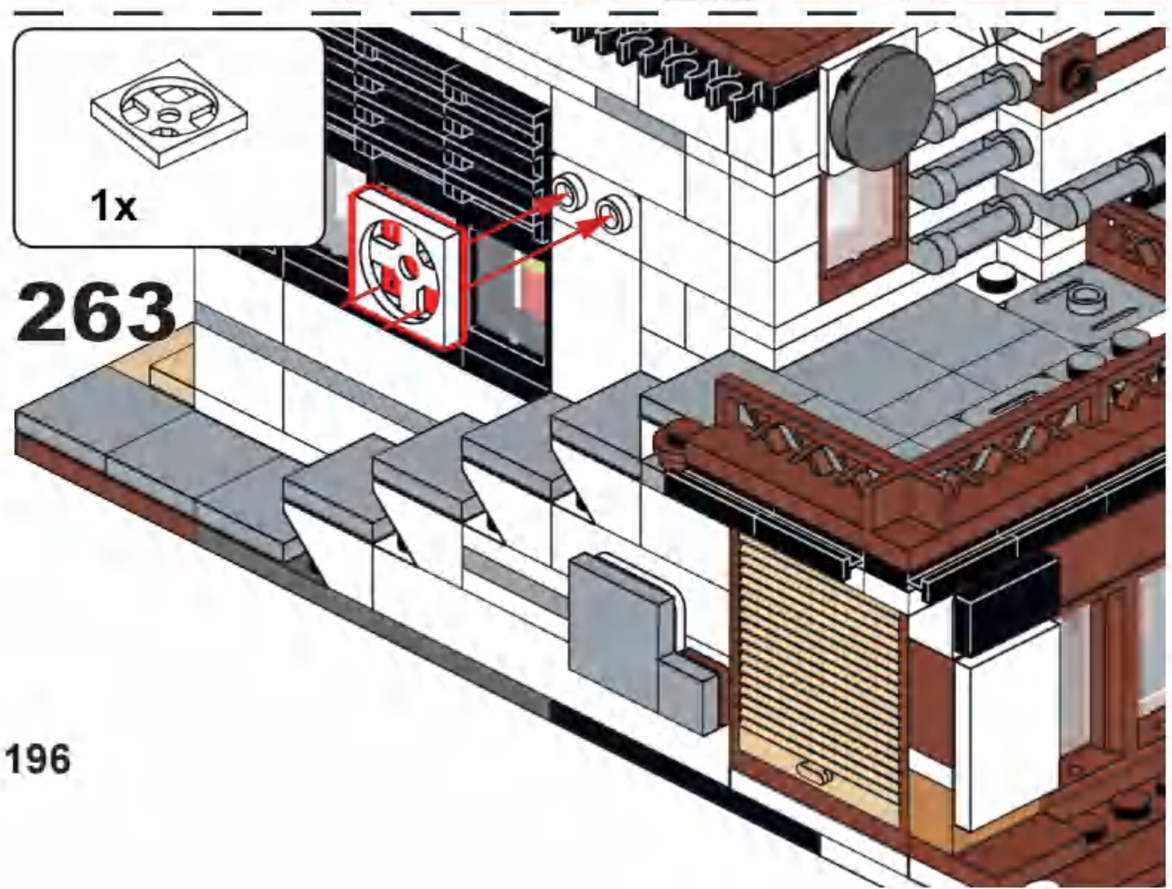

263

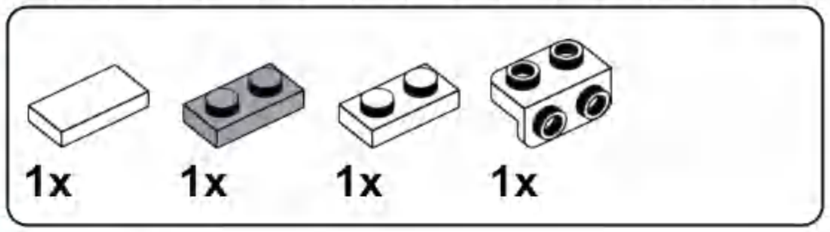

264

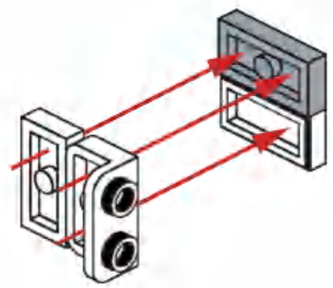

1x

265

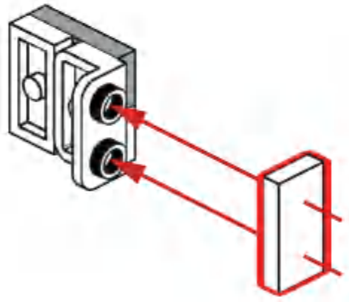

1x 1x

266

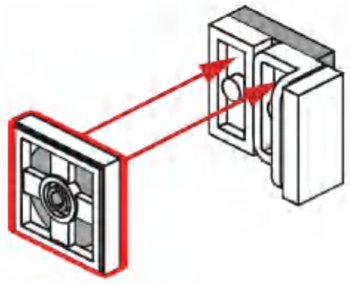

267

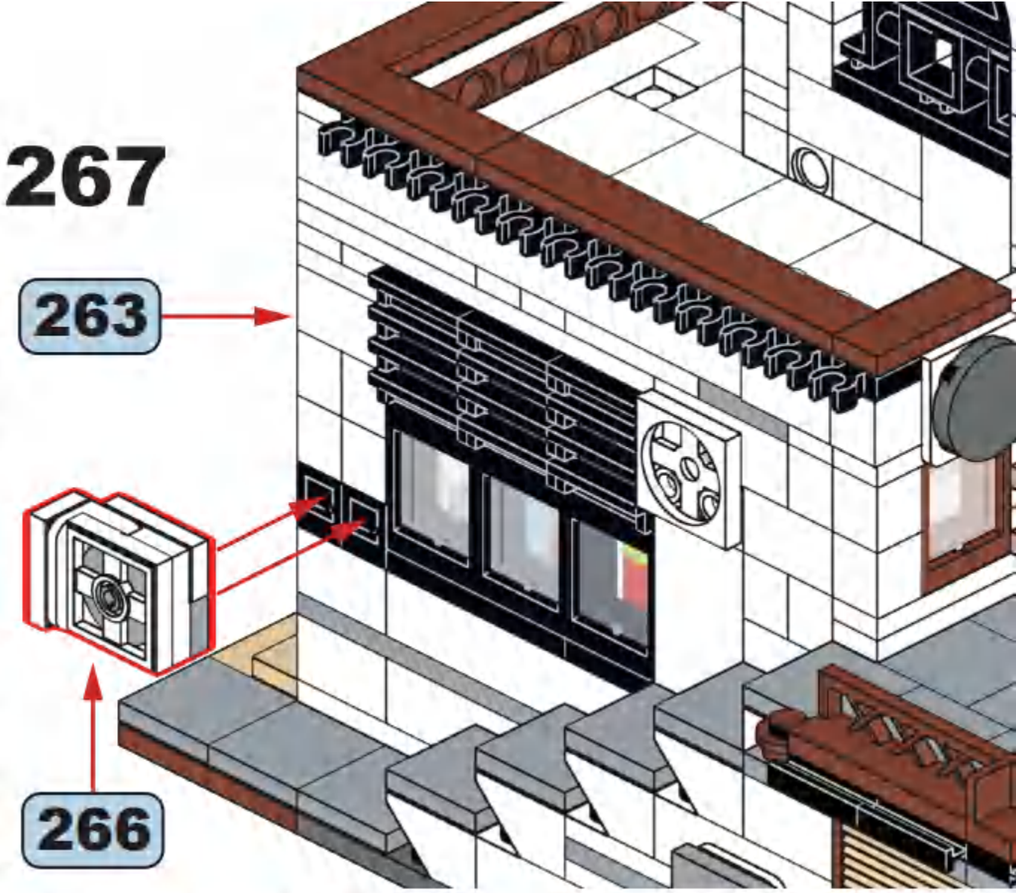

2x 1x

268

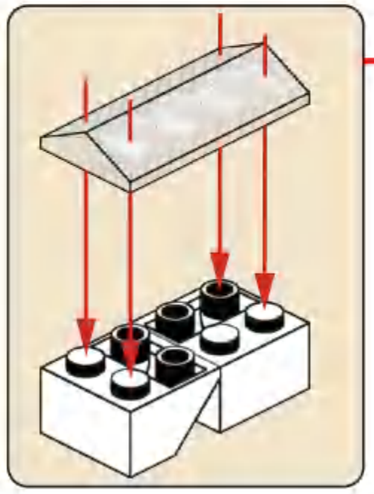

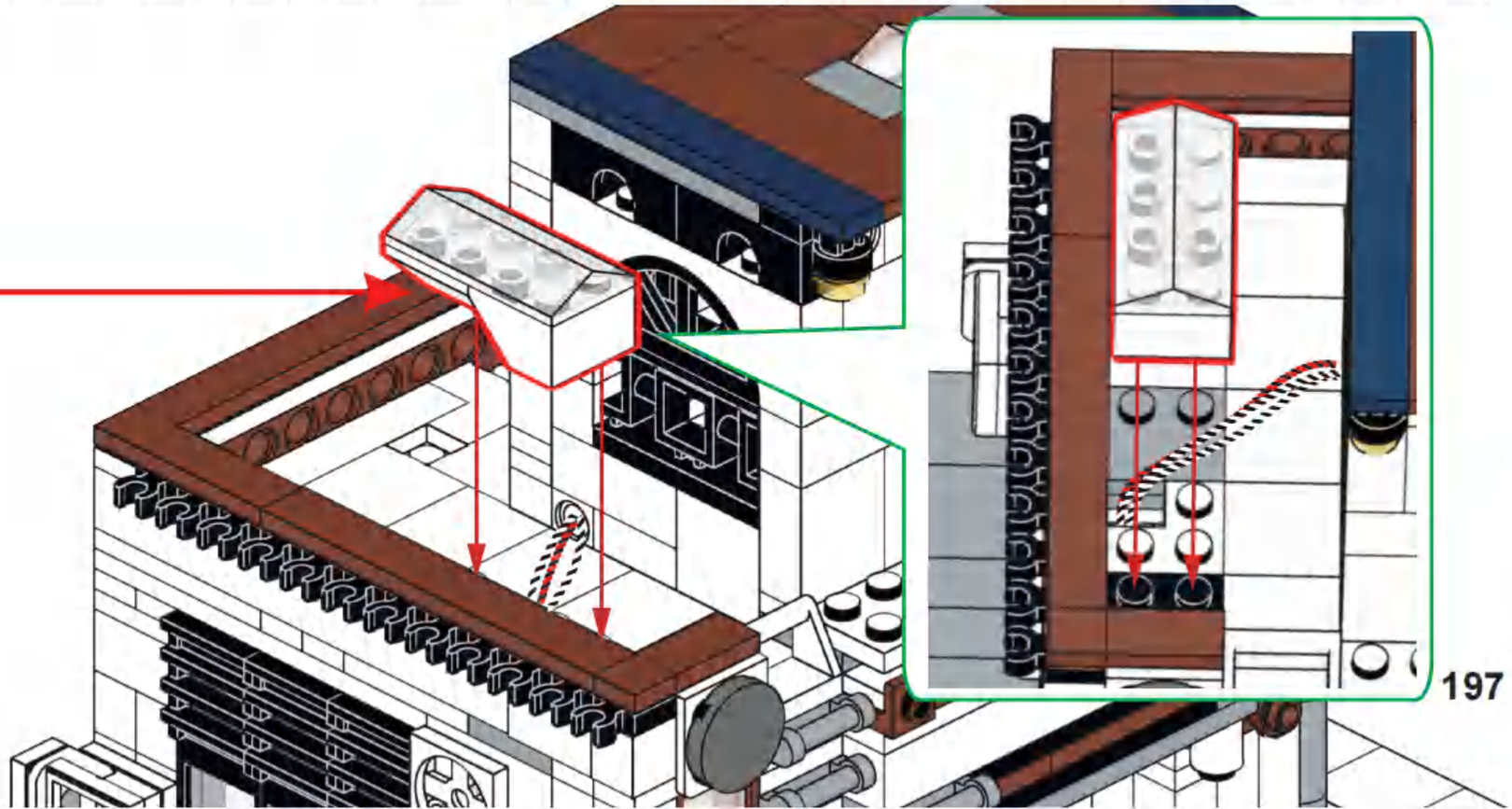

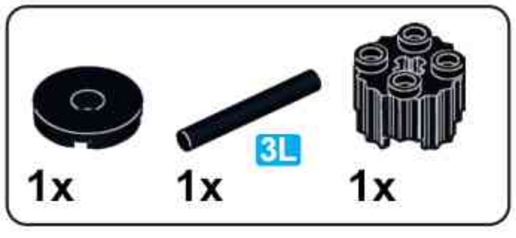

269

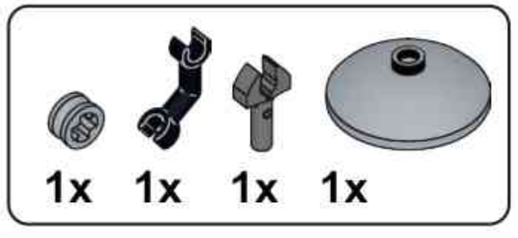

270

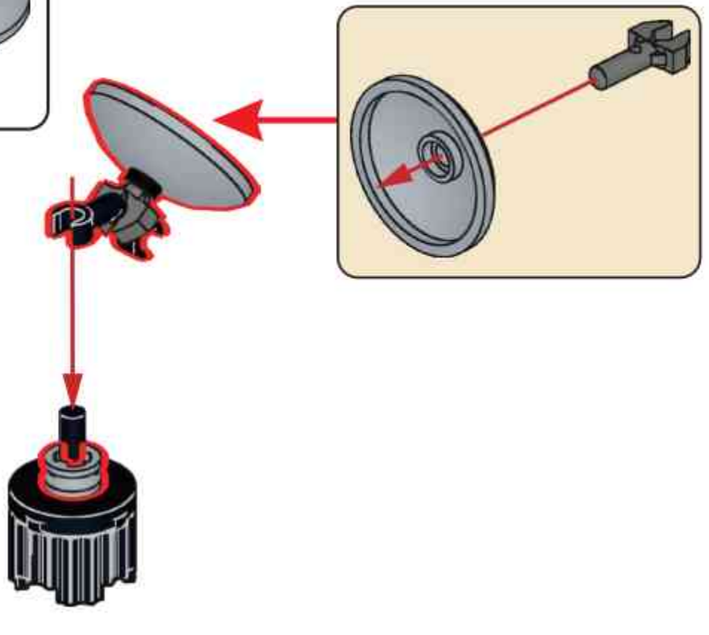

271

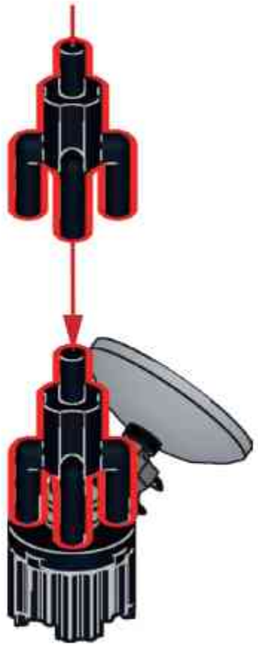

272

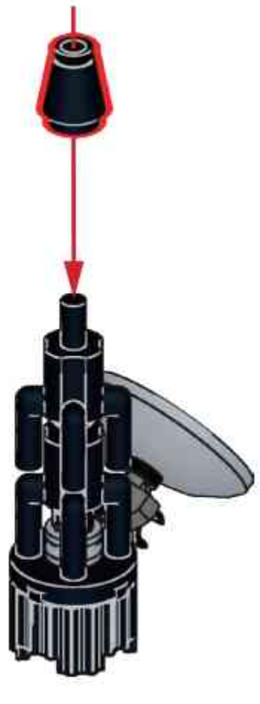

273

274

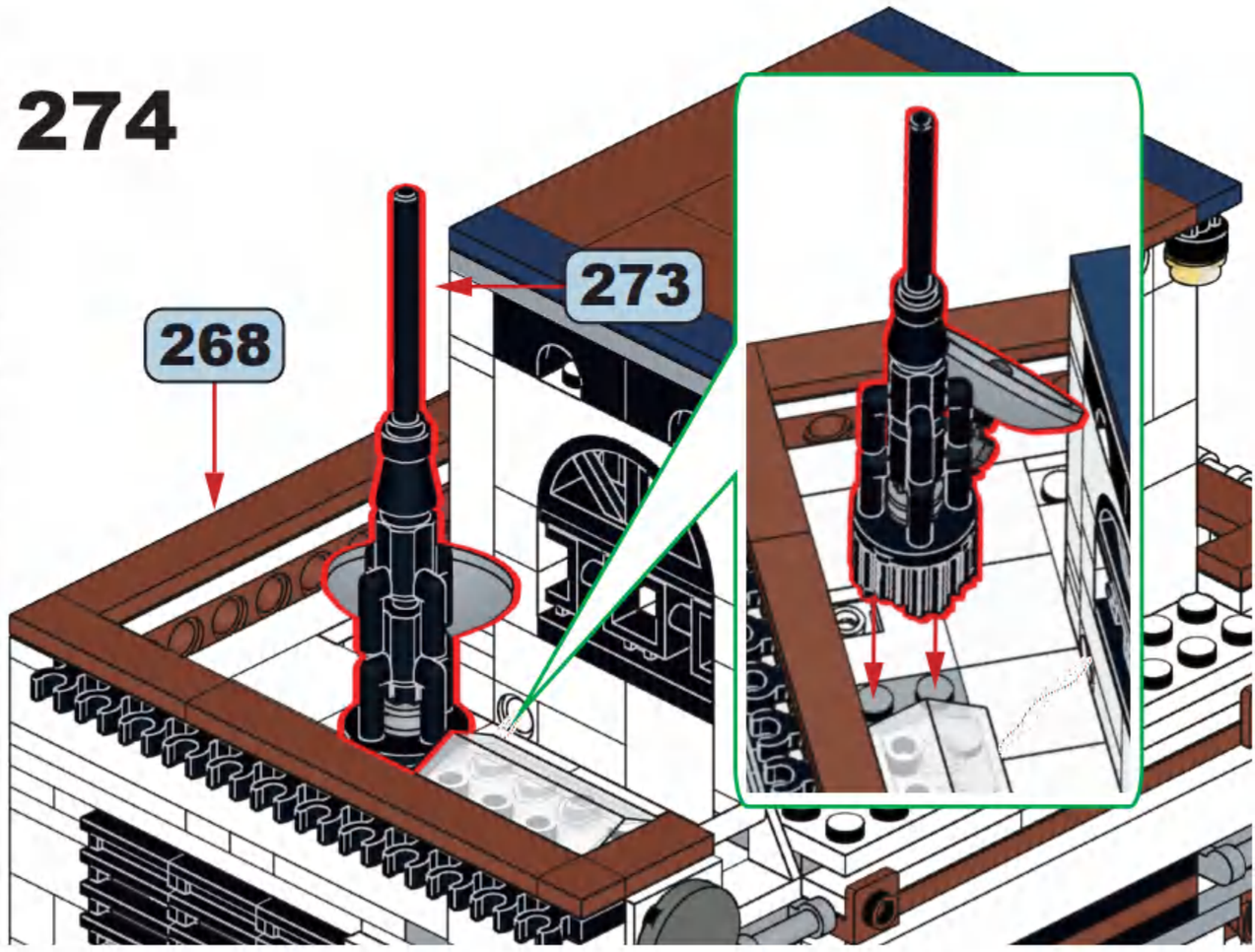

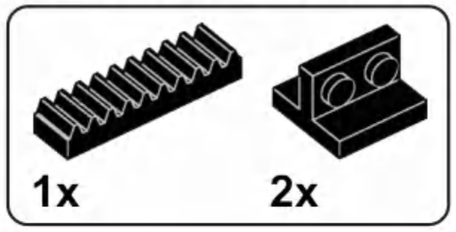

275

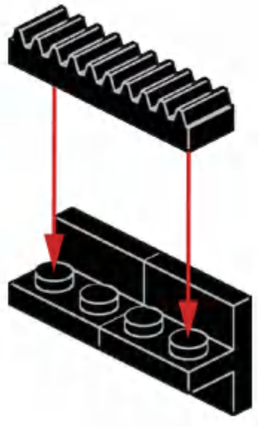

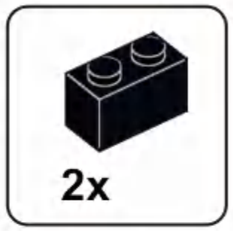

276

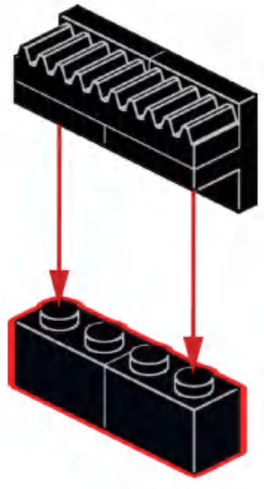

2x 1x

277

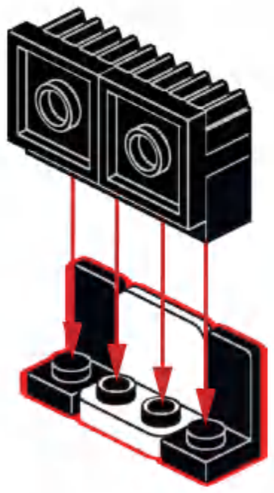

2x 1x

278

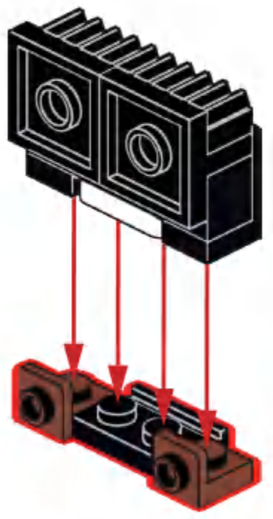

2x 1x 1x

2X4

279

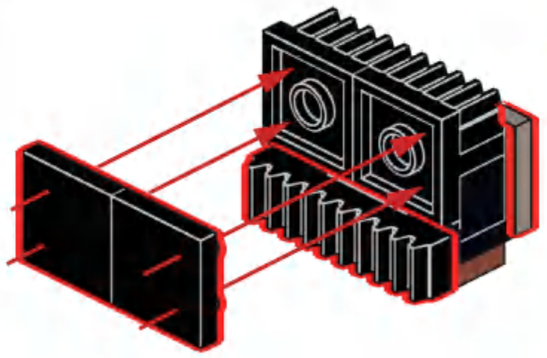

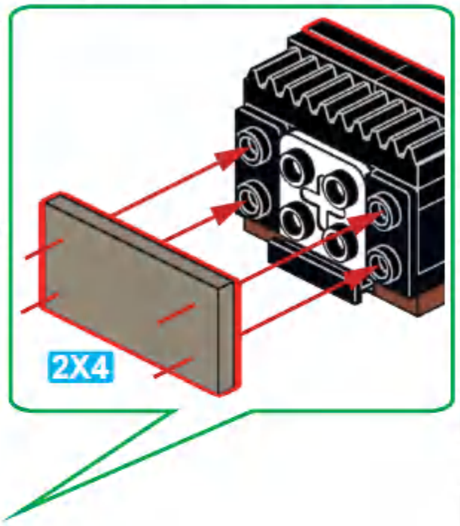

280

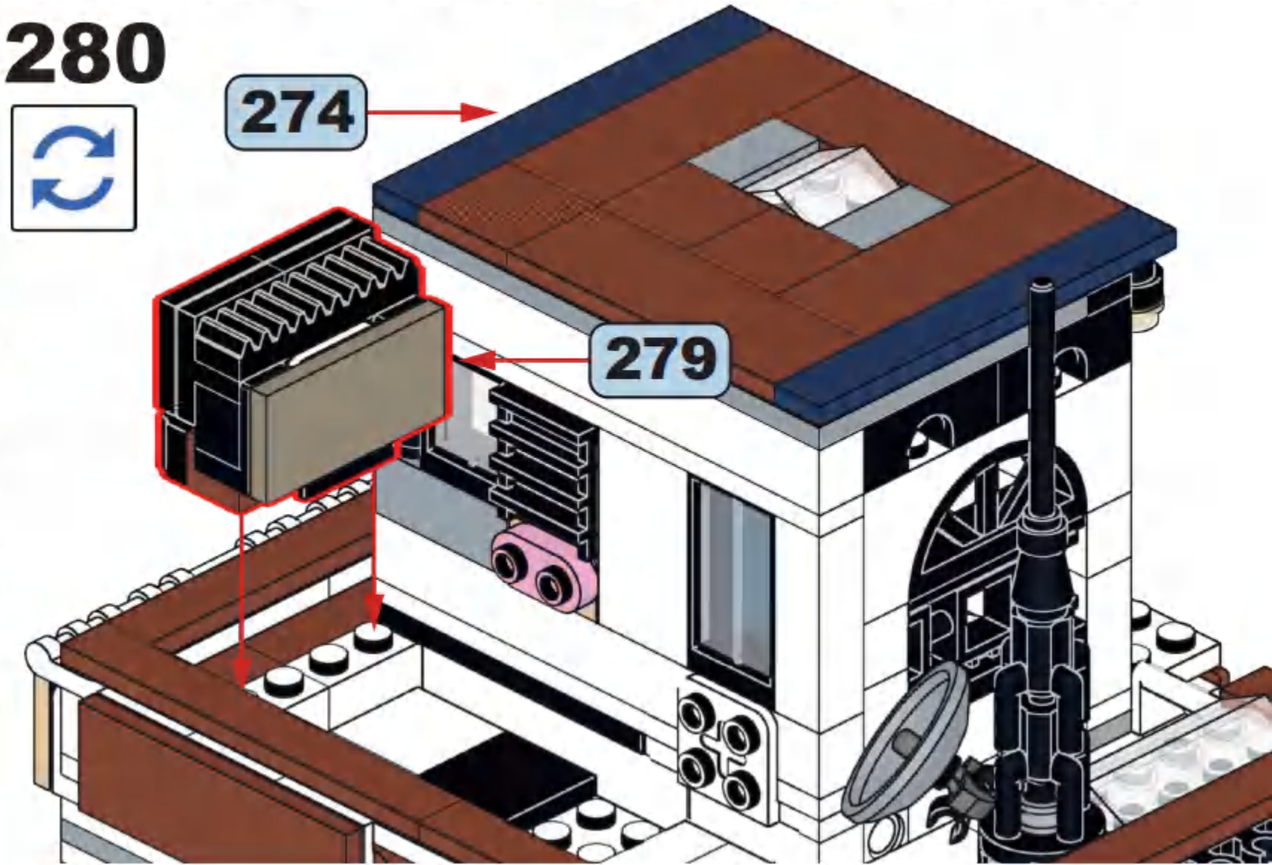

281

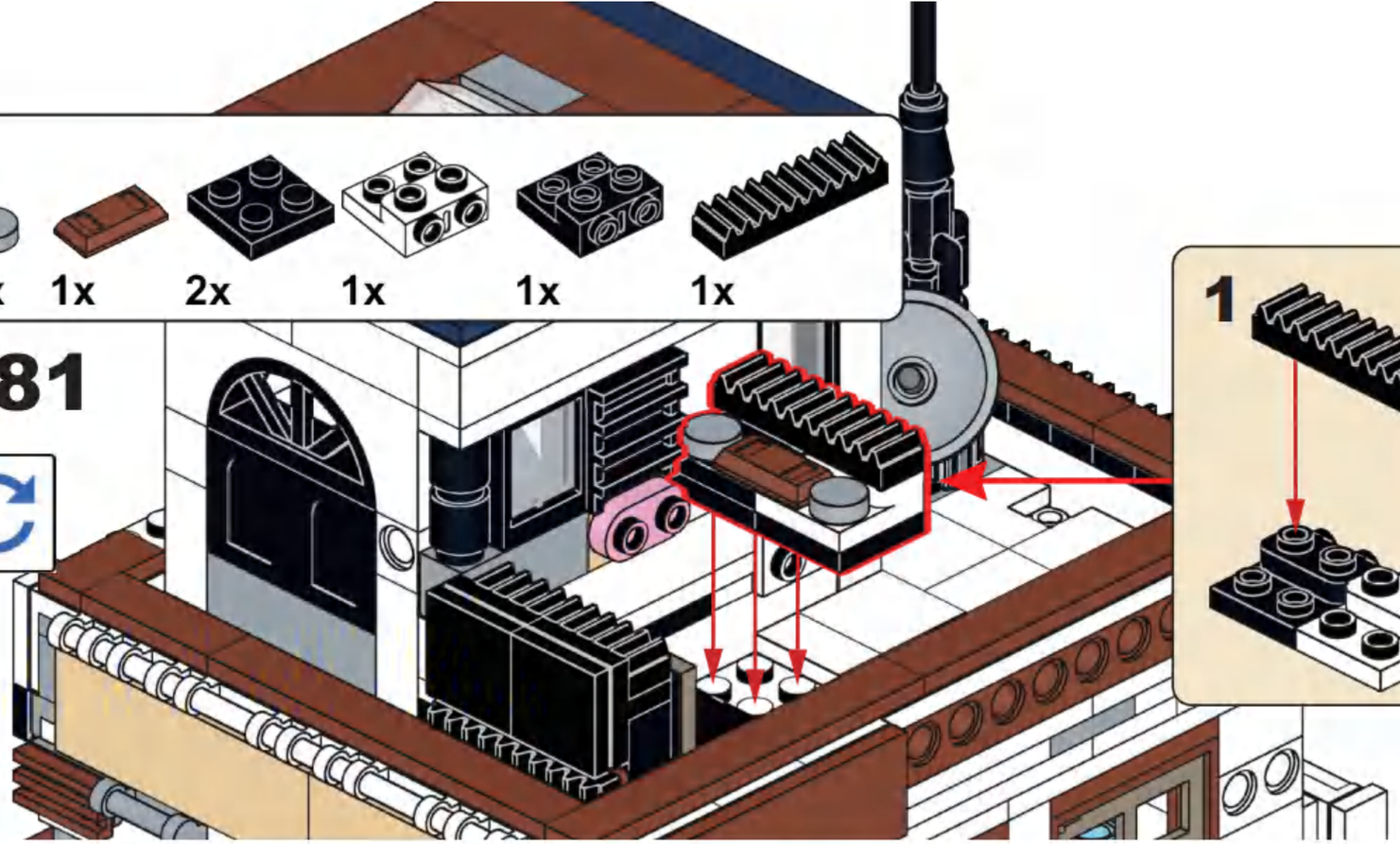

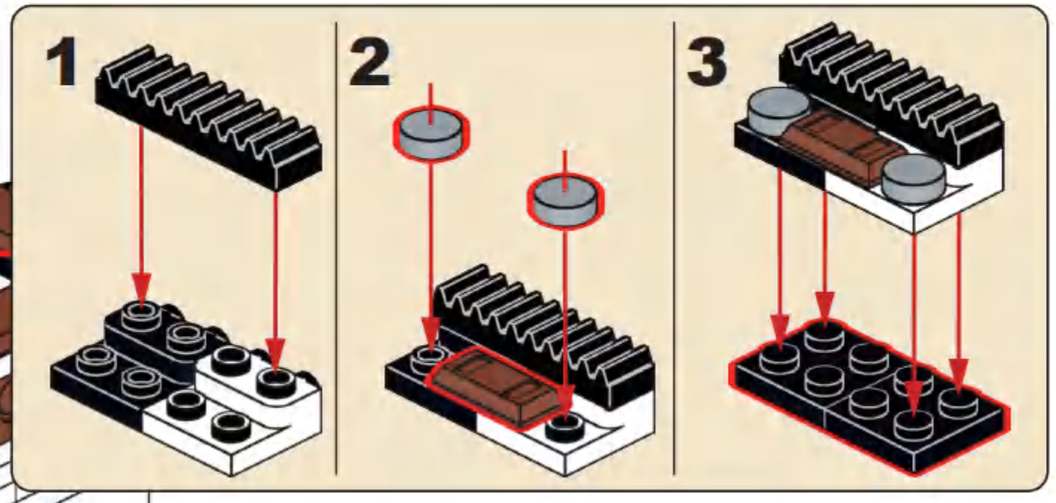

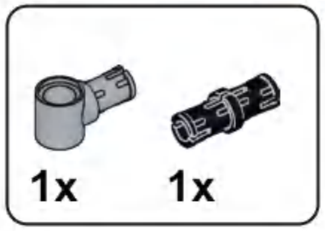

282

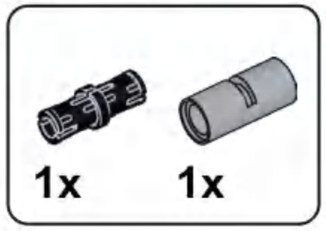

283

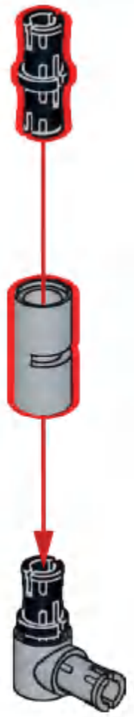

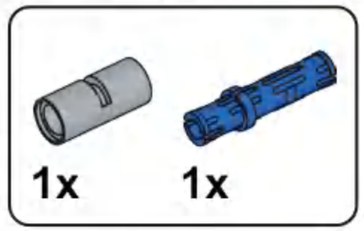

284

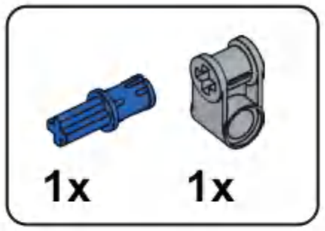

285

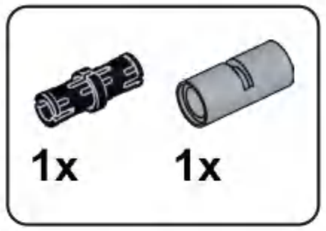

286

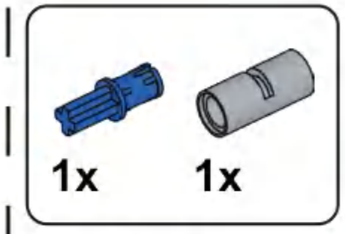

287

288

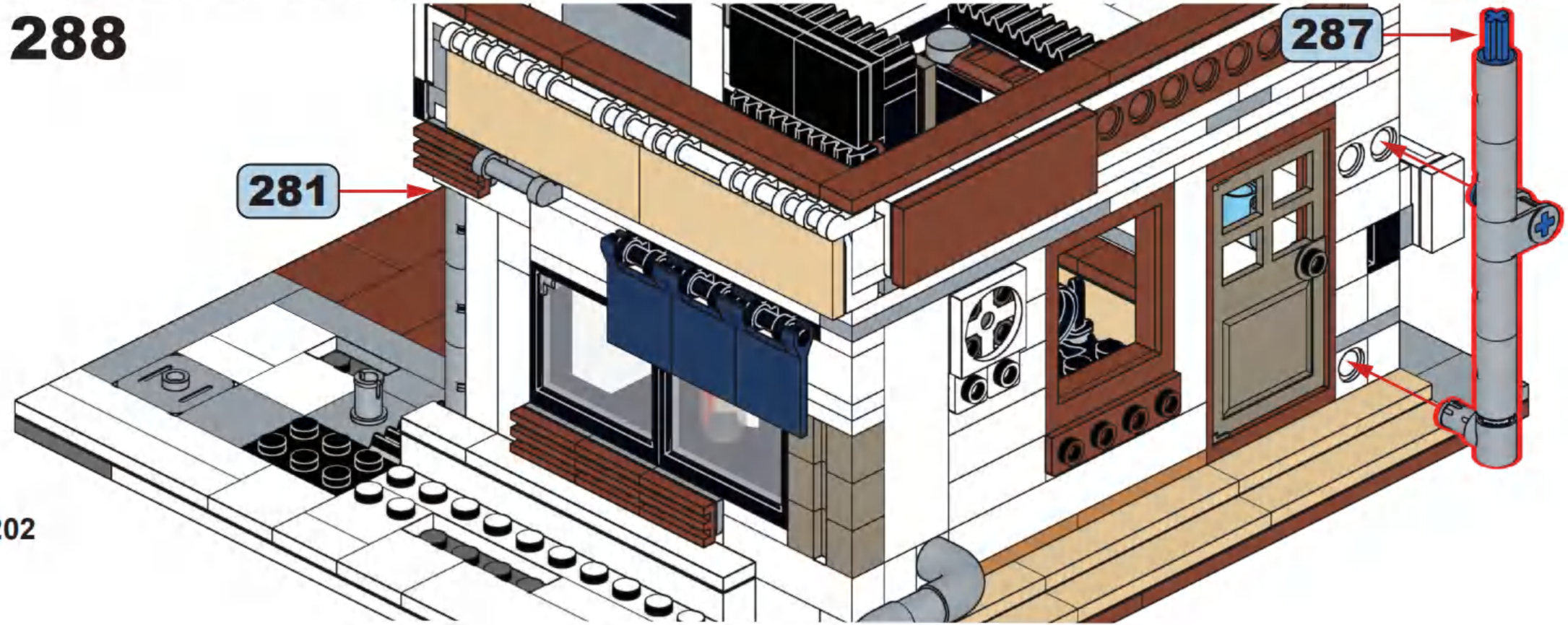

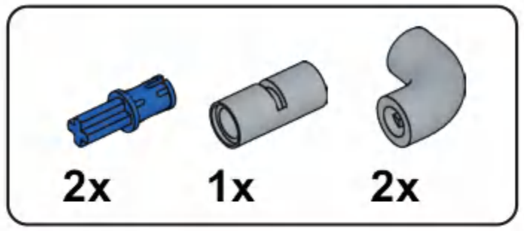

289

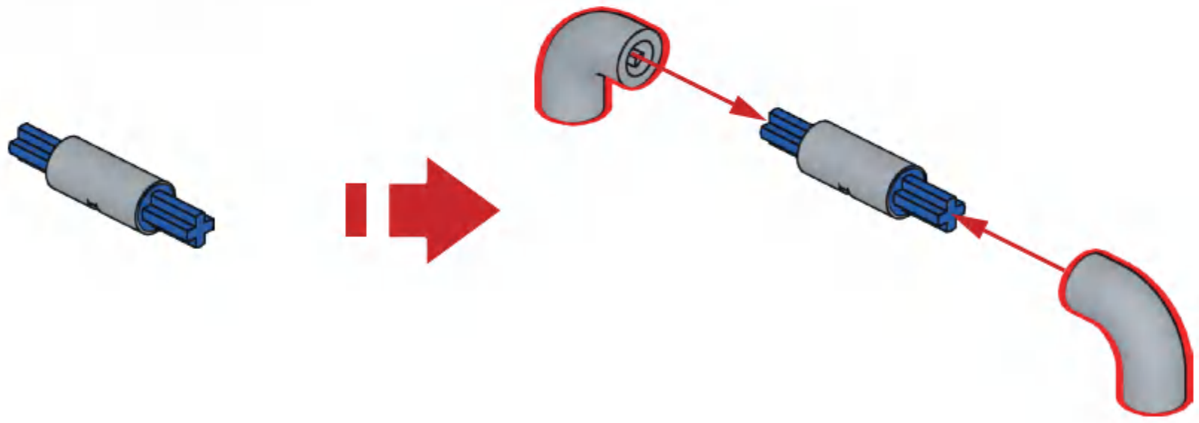

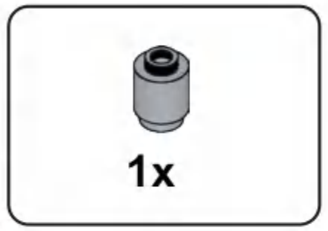

290

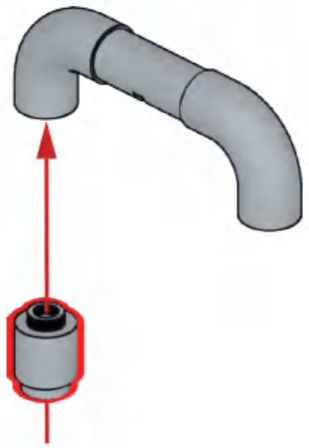

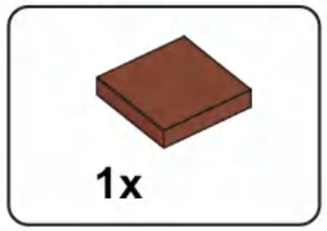

291

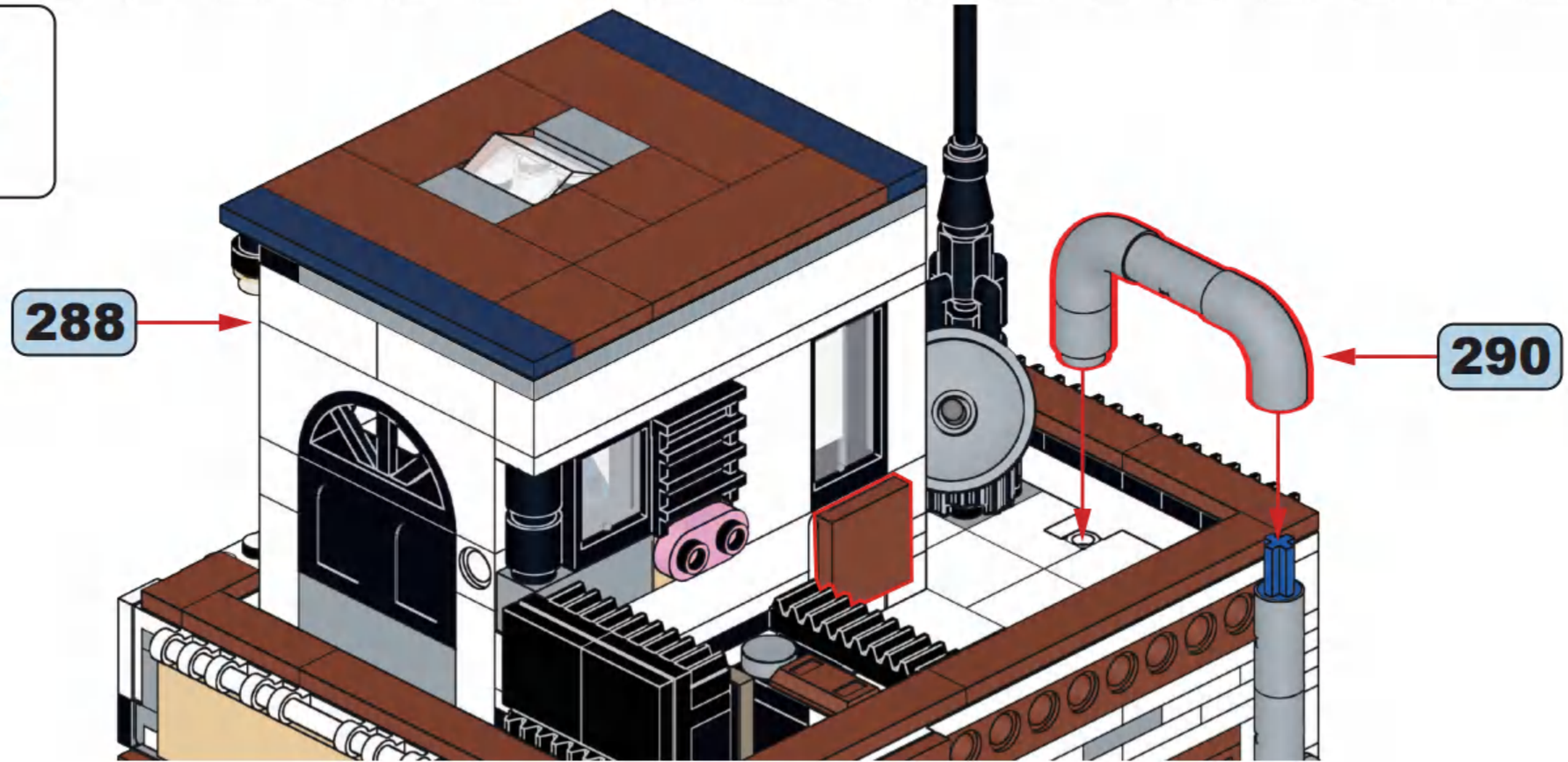

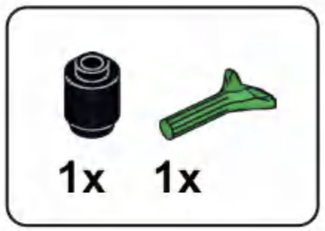

292

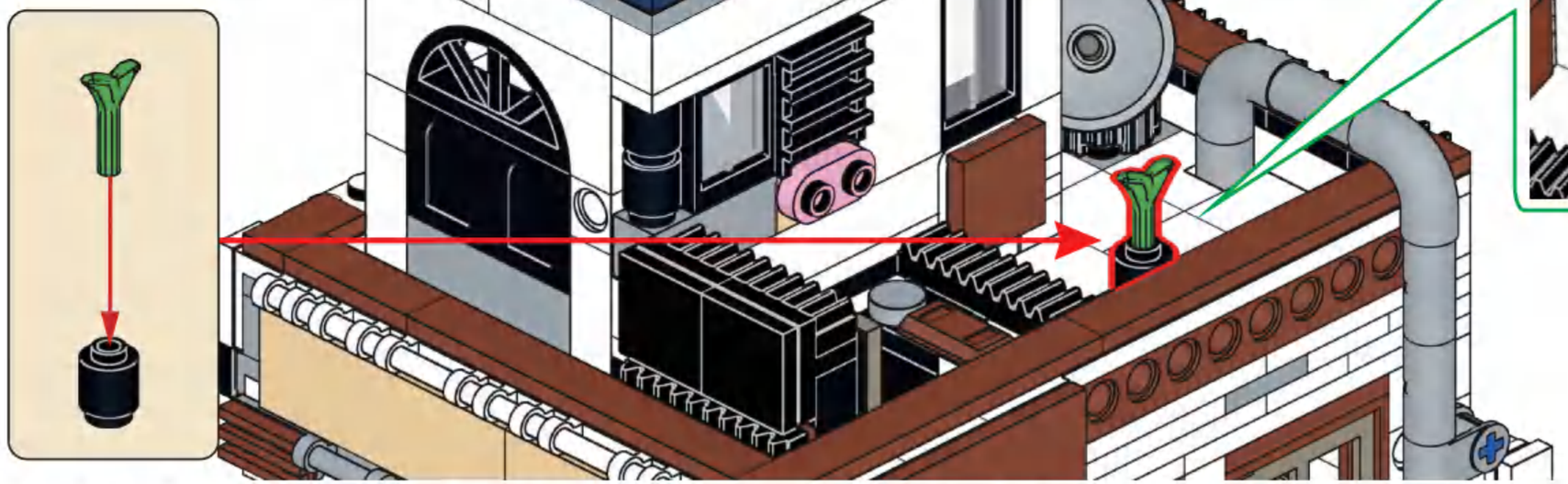

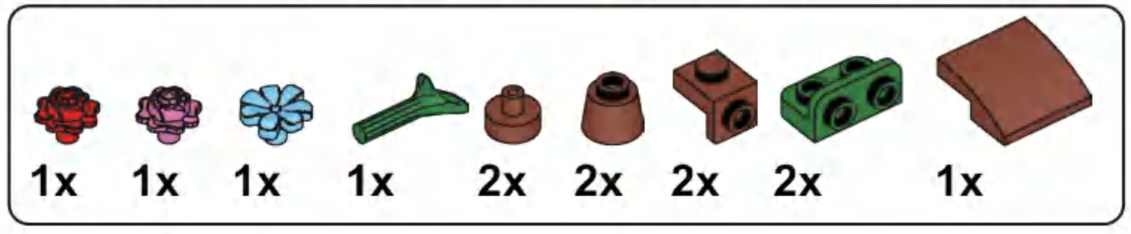

293

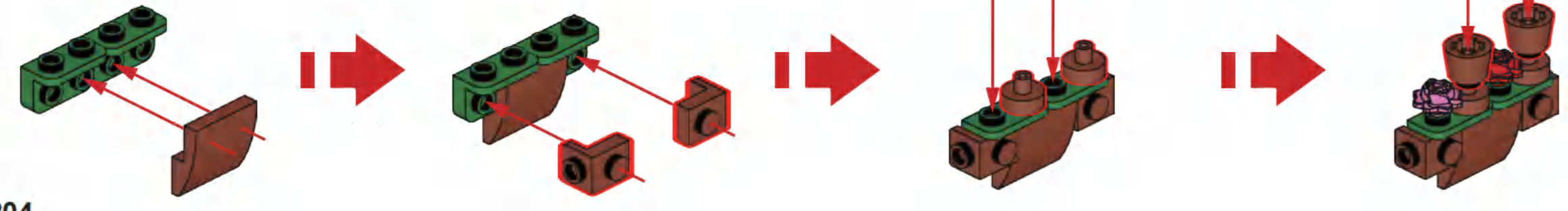

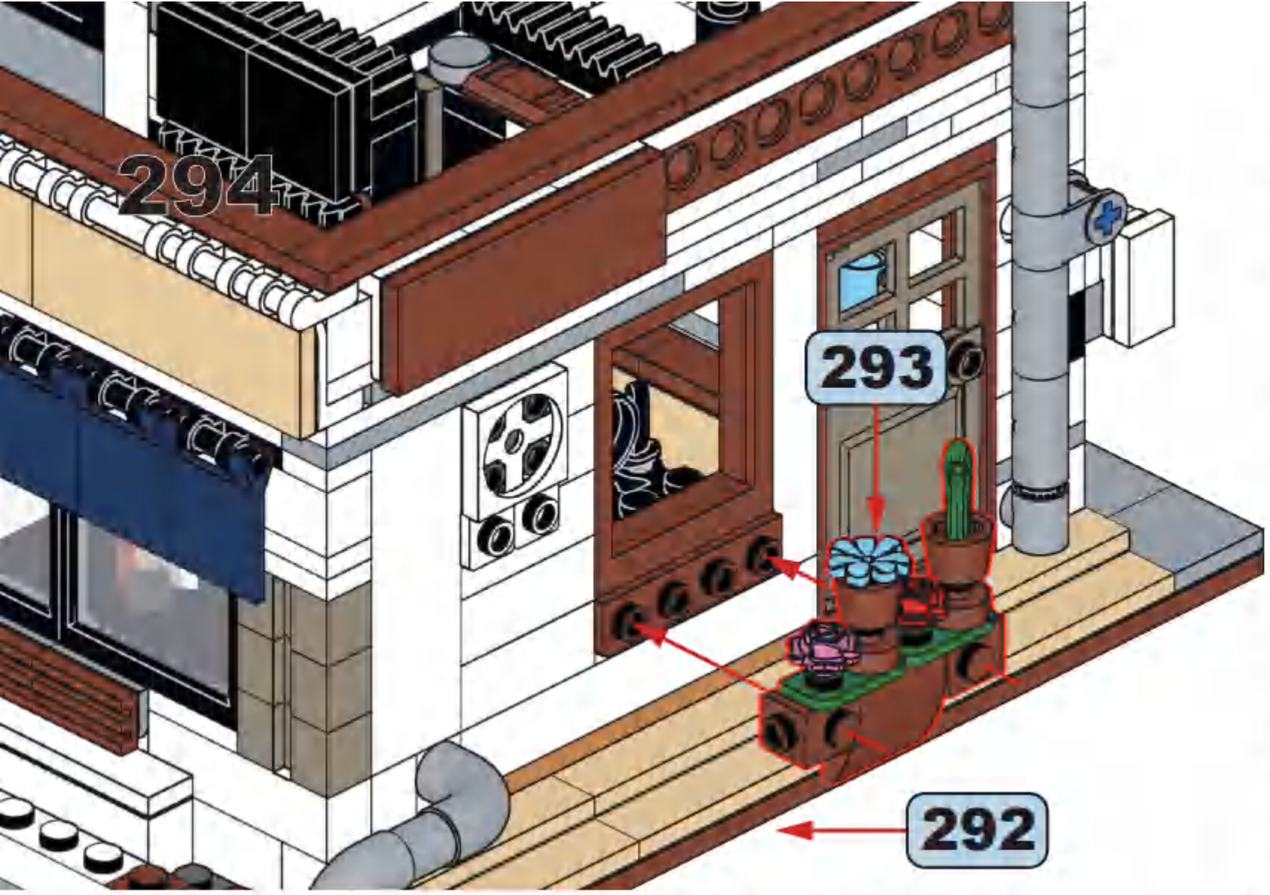

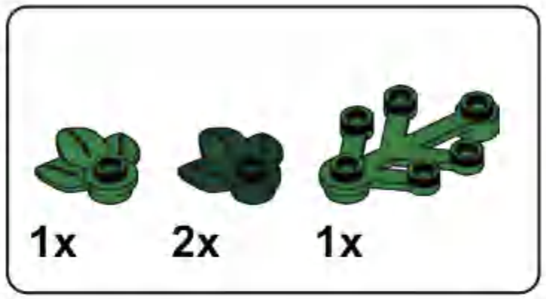

295

296

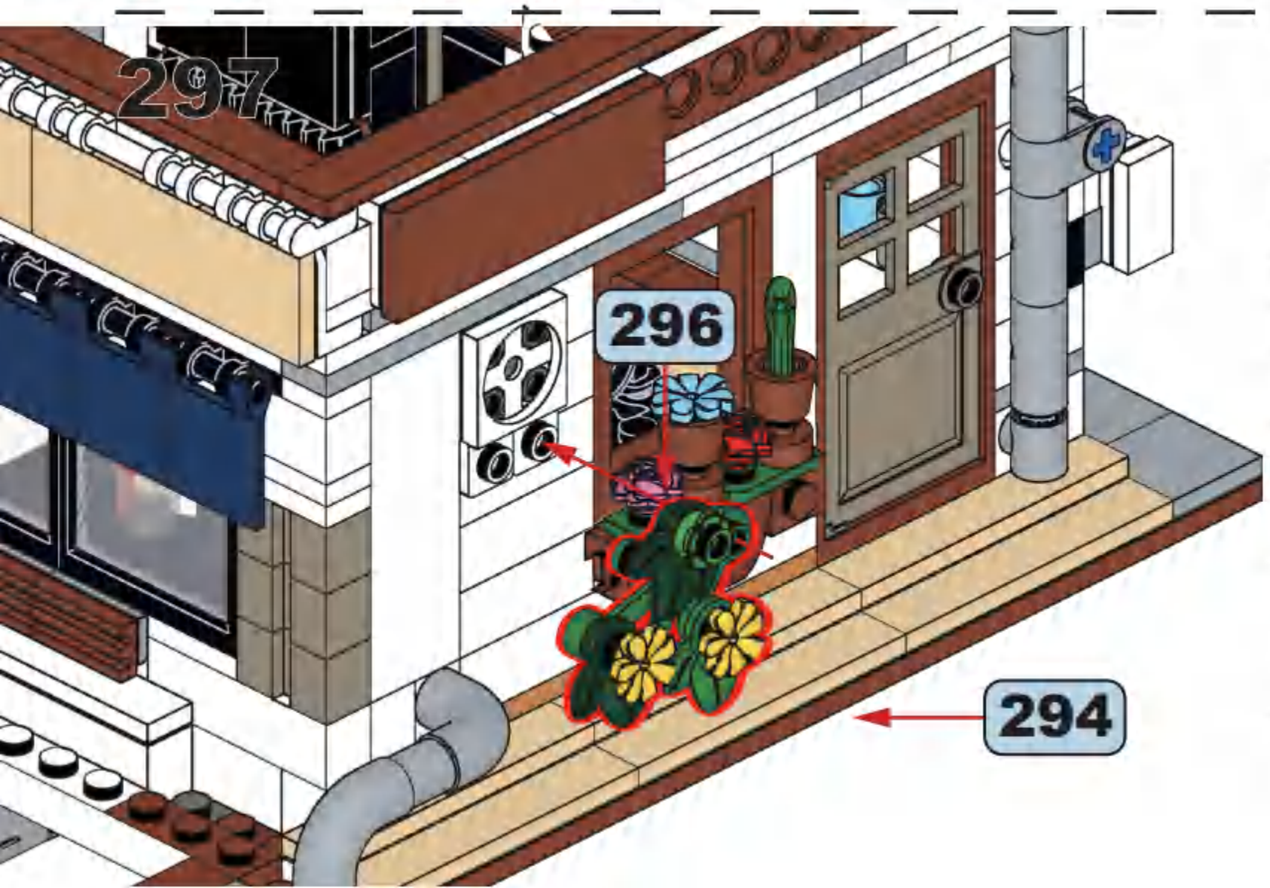

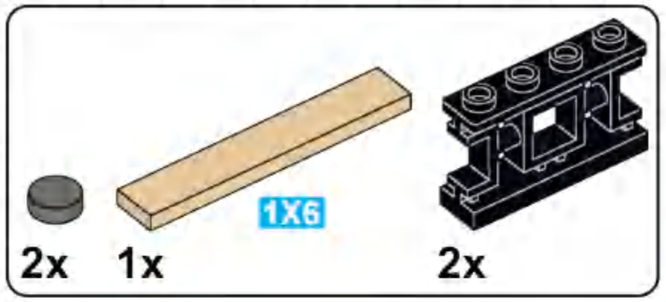

298

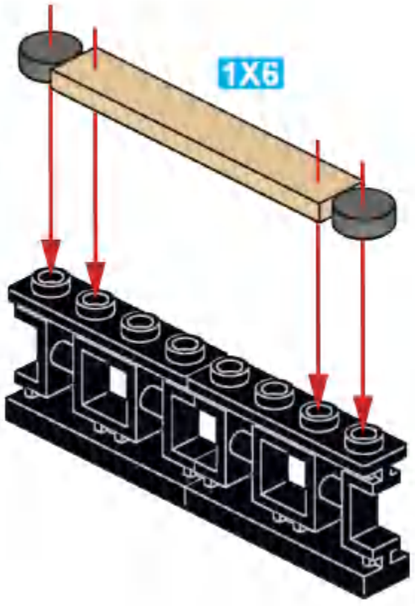

299

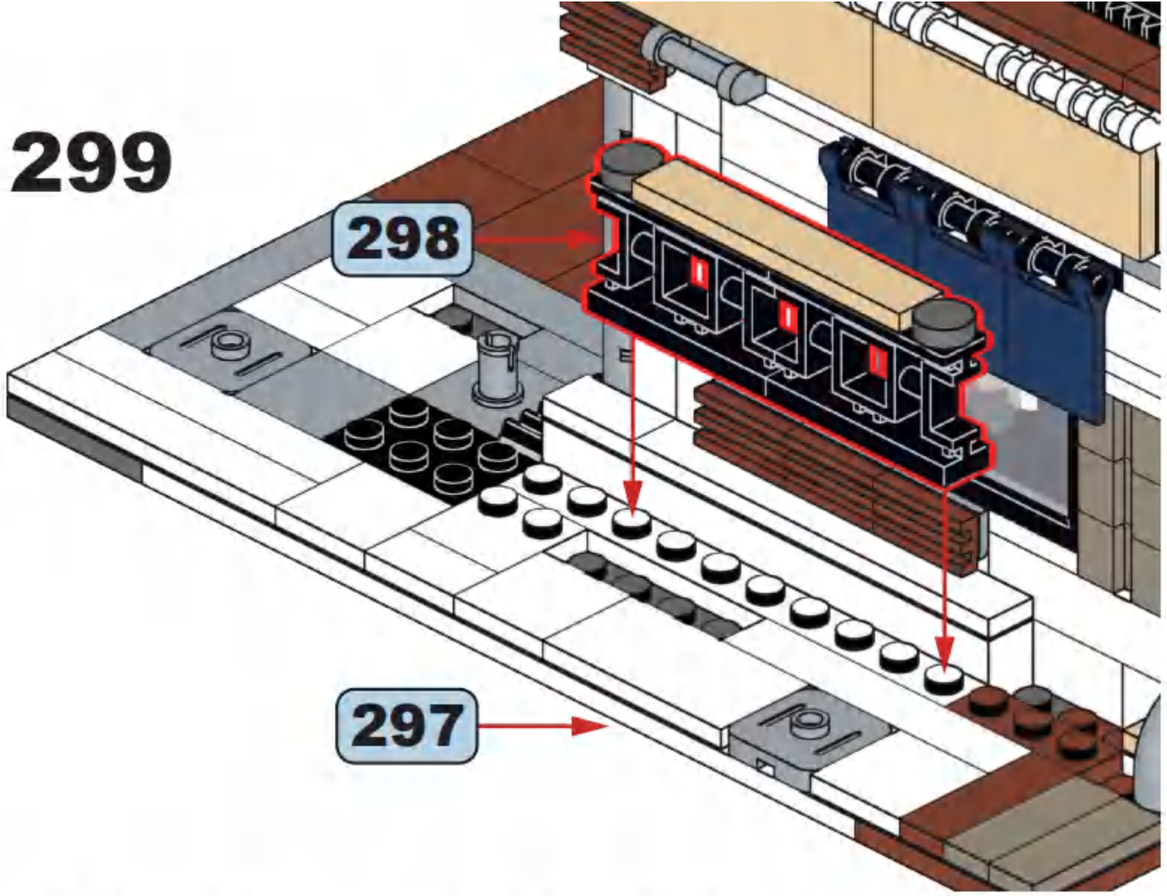

300

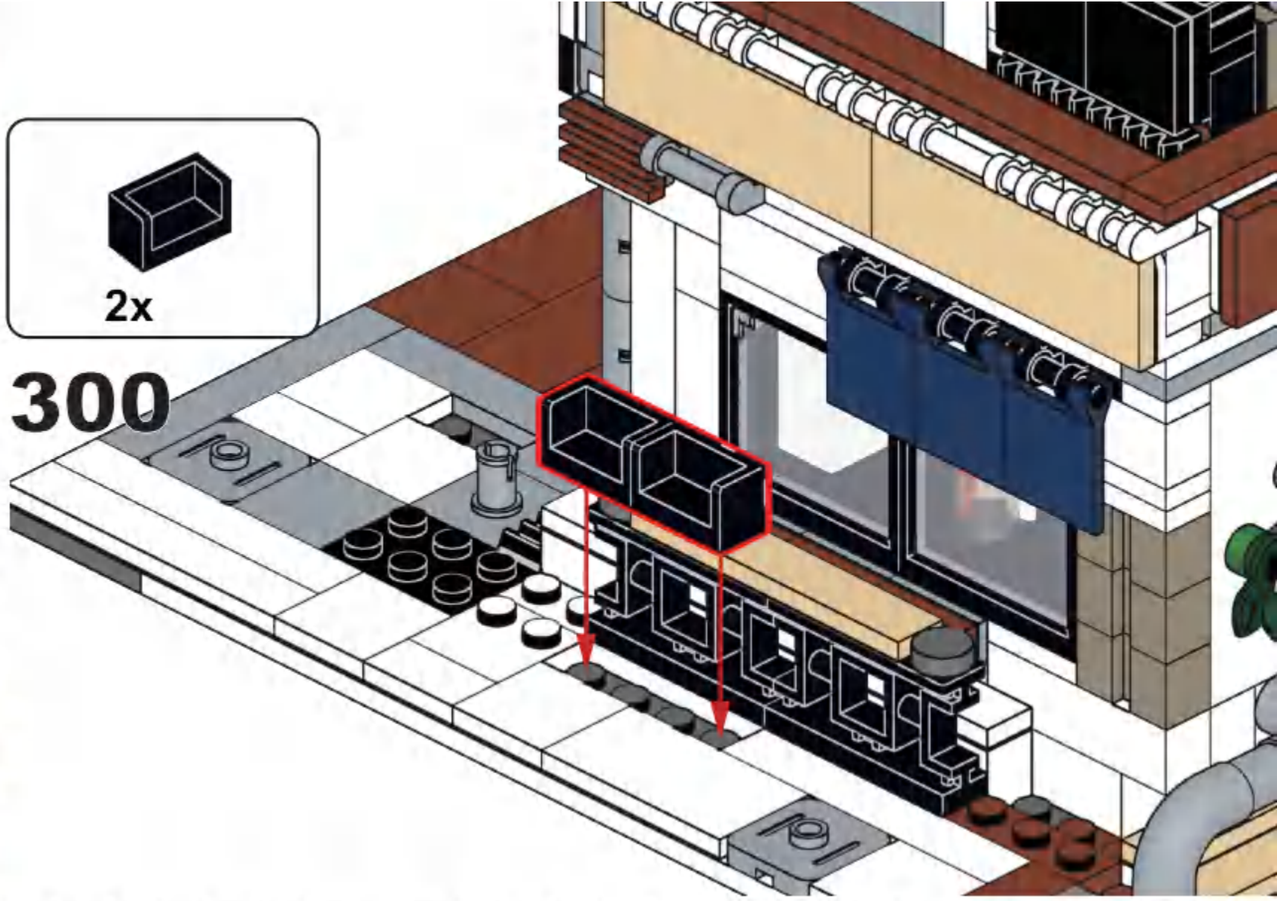

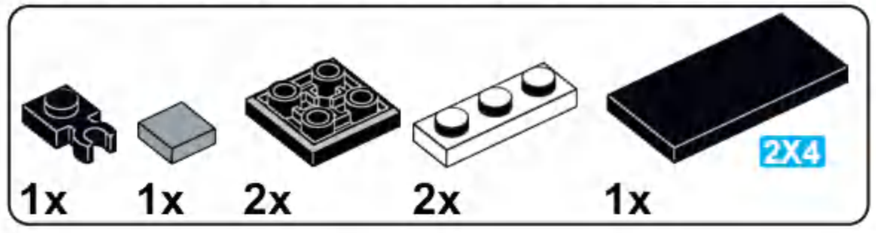

301

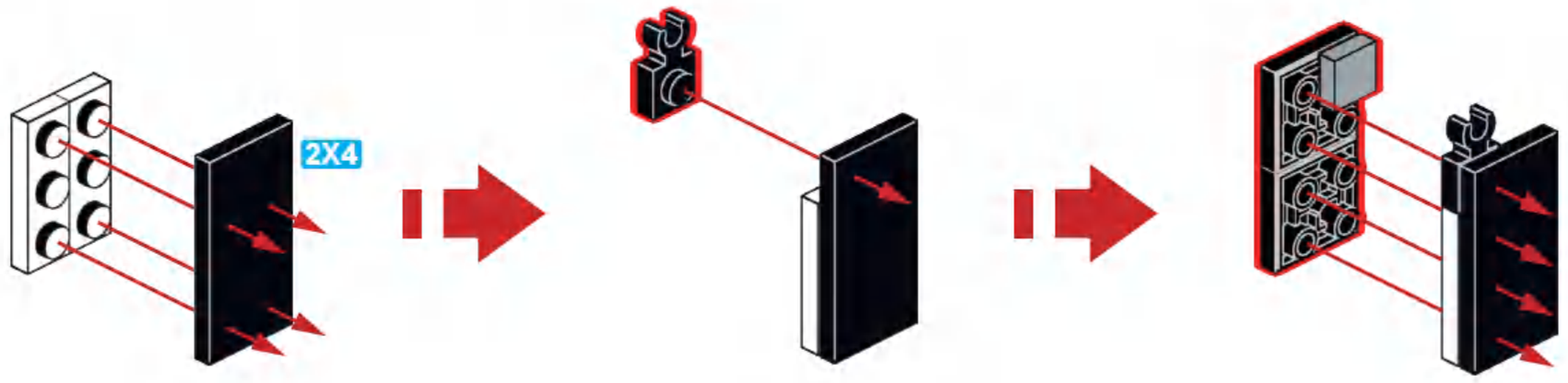

302

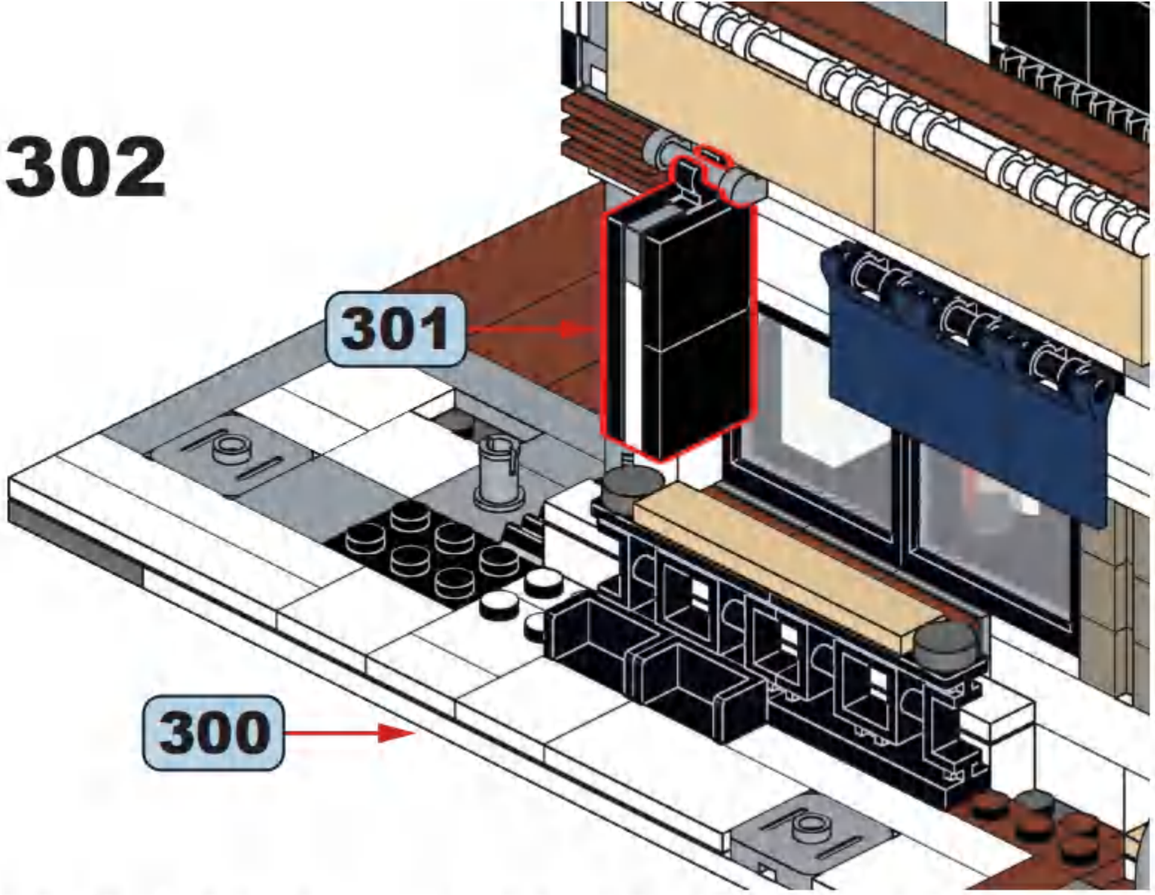

303

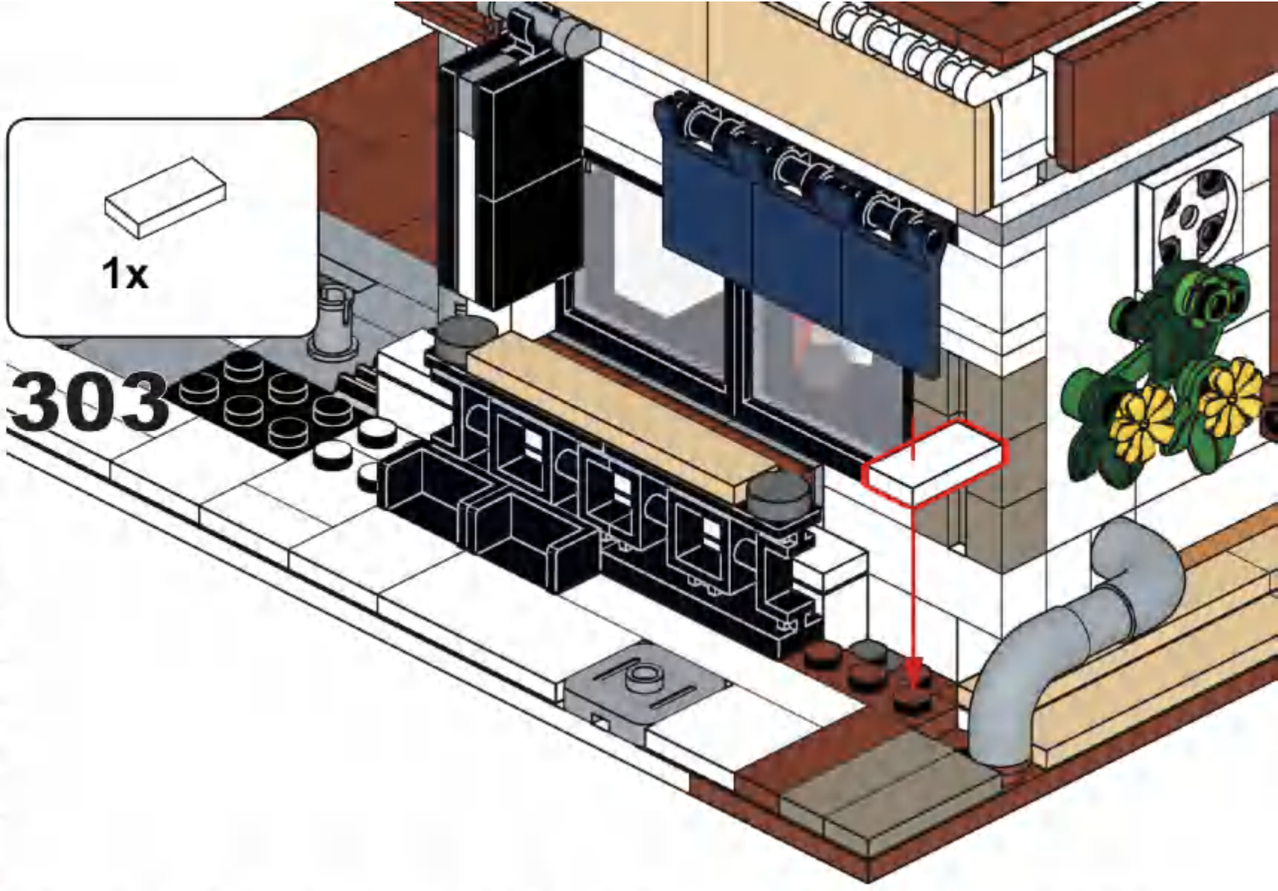

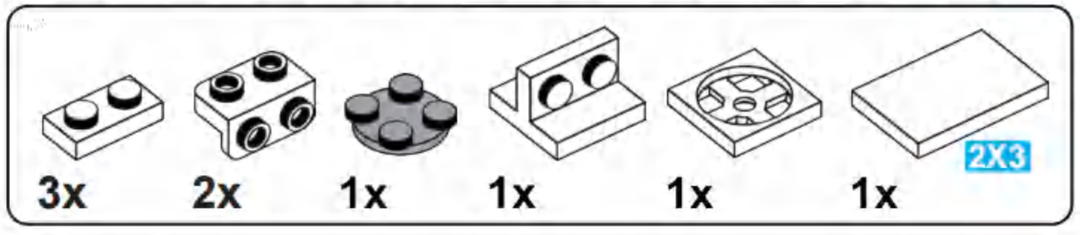

304

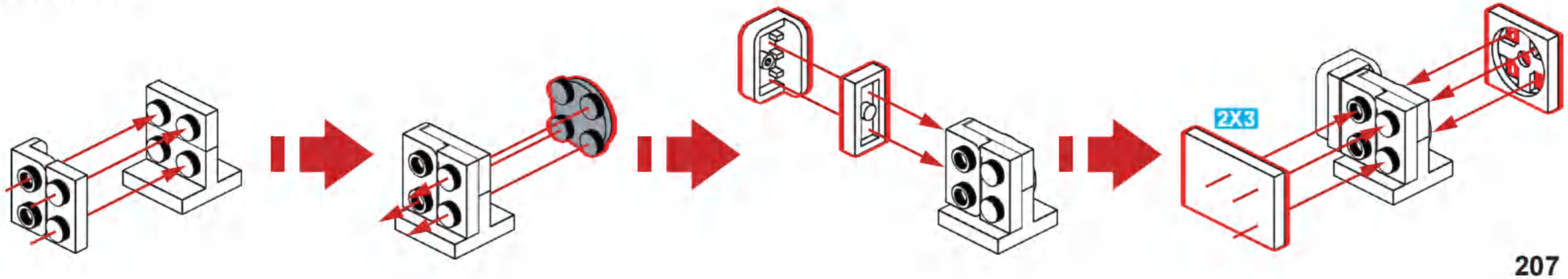

305

304

303

1x

306

1x 1x 1x

2X6

307

2X6

1x 1x

308

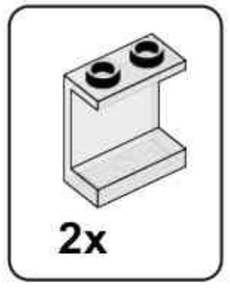

309

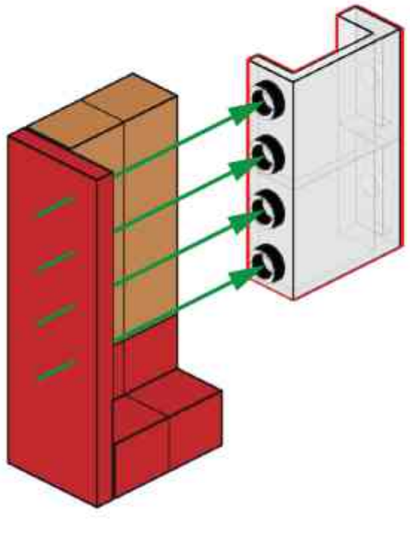

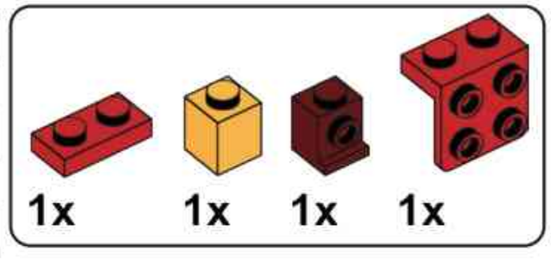

310

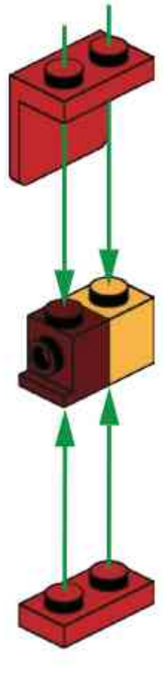

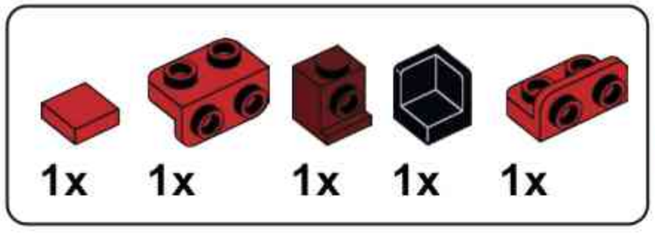

311

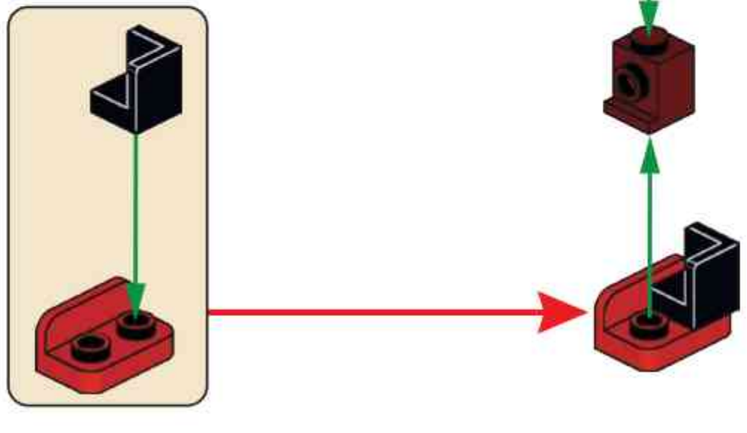

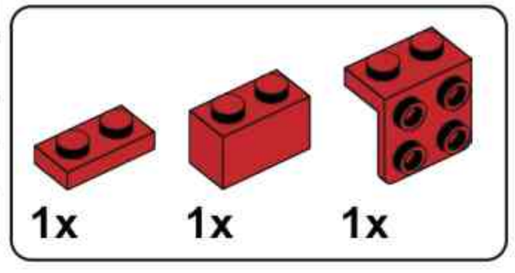

312

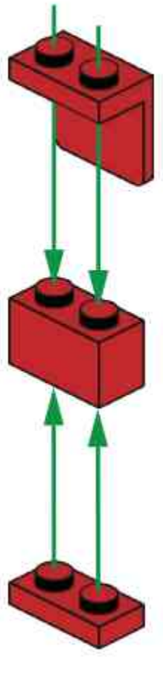

313

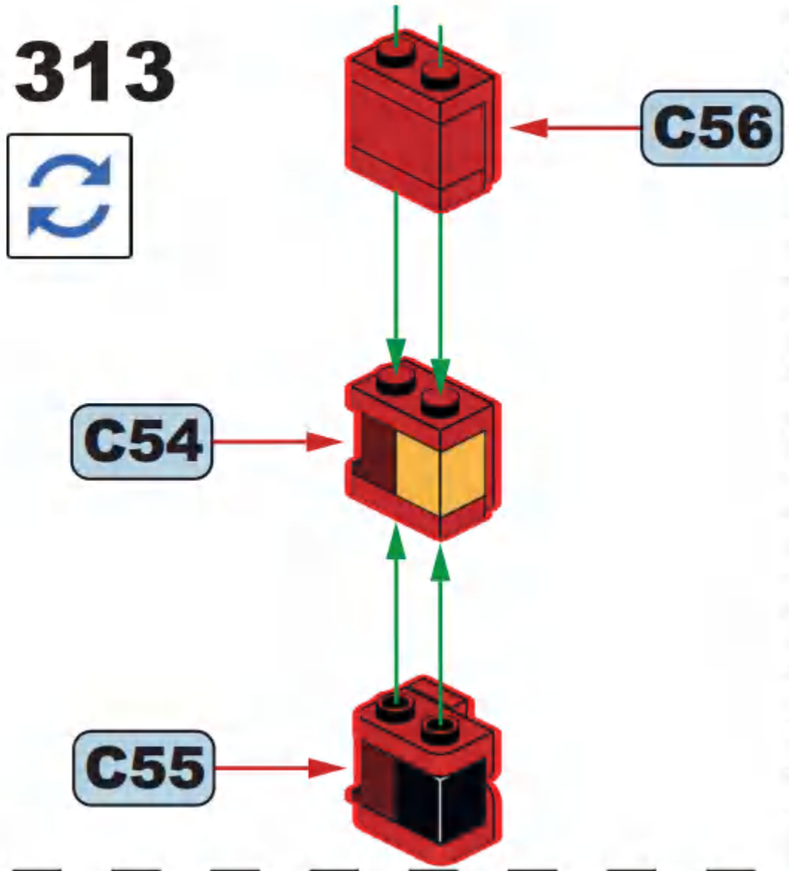

314

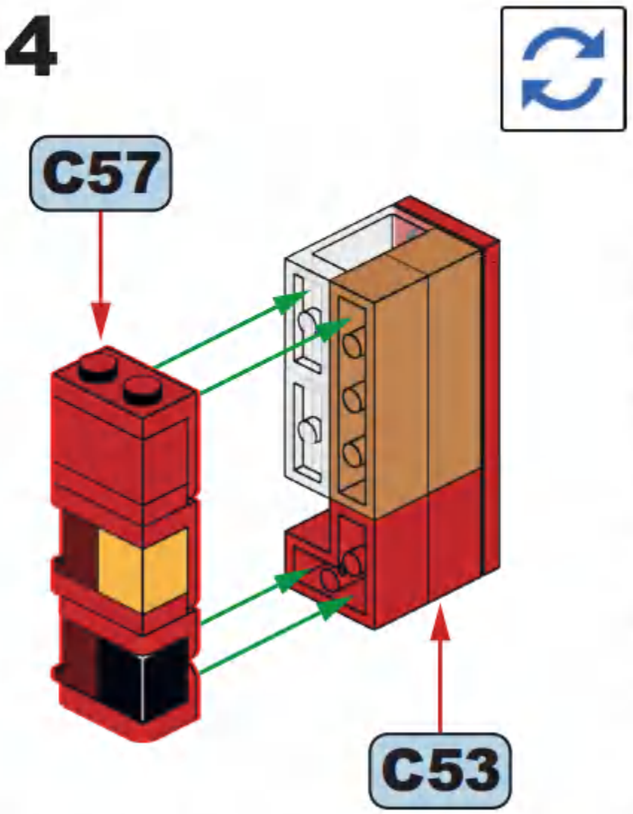

315

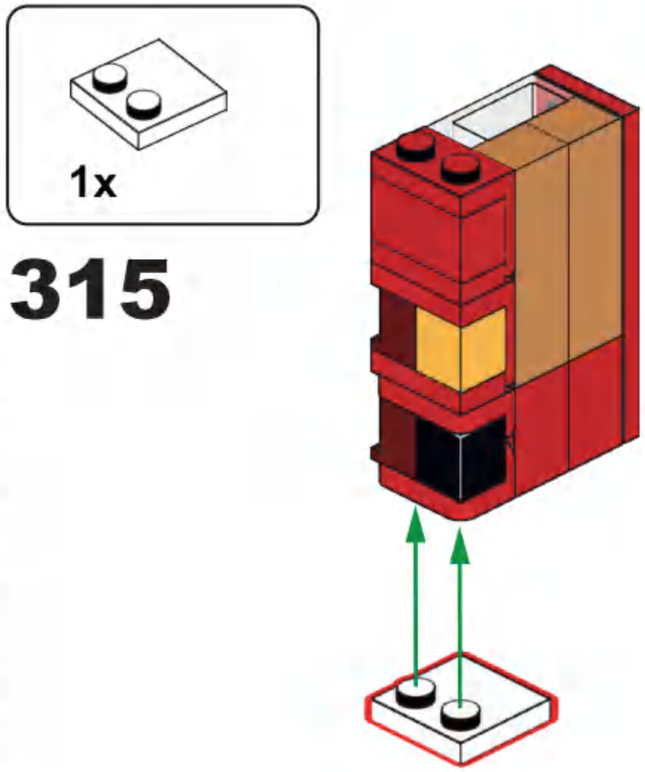

316

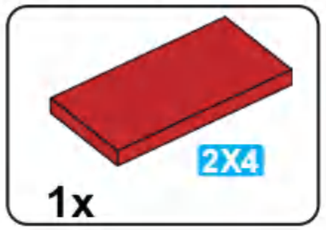

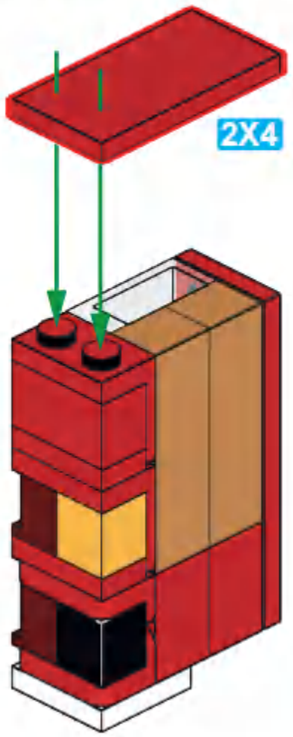

317

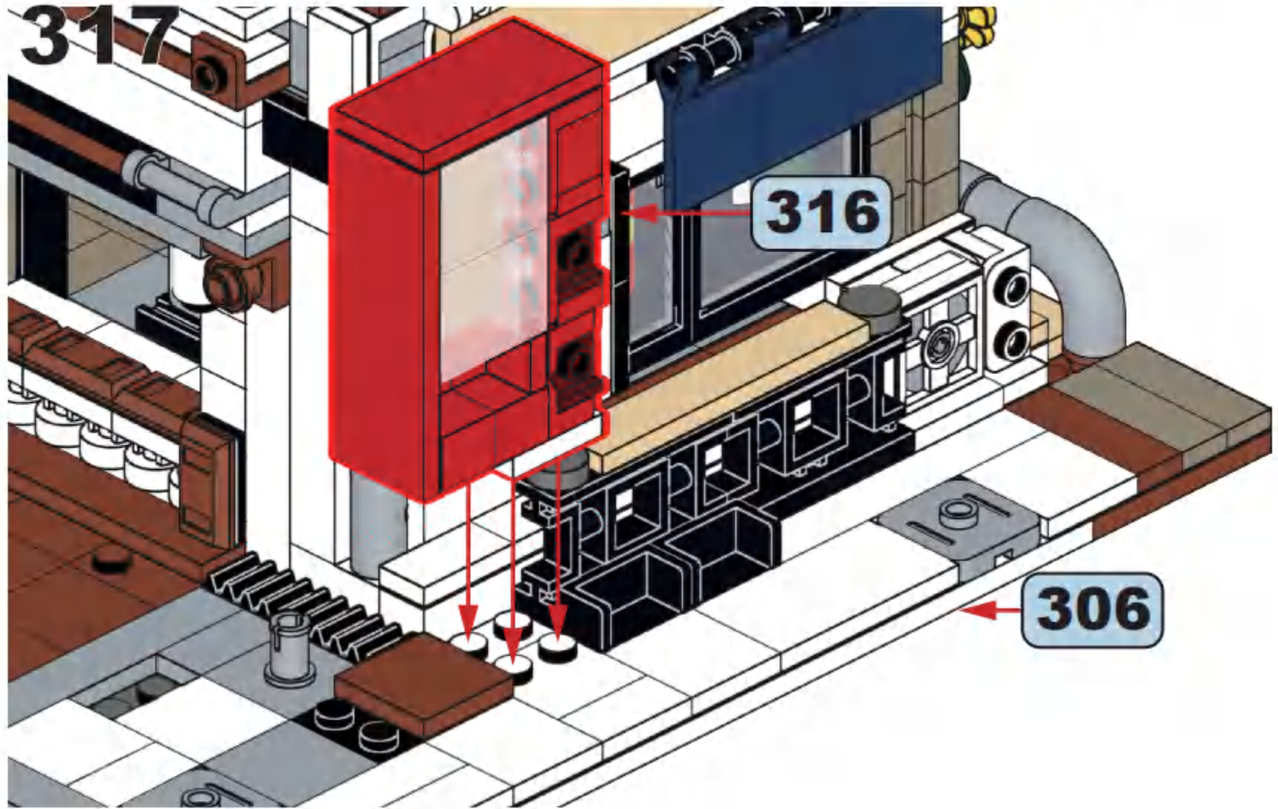

1x 1x 1x

318

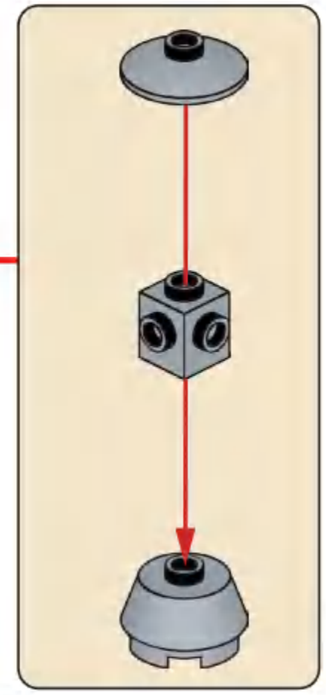

1x 1x 1x

319

2x 1x 1x

320

2x

321

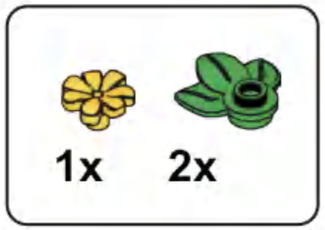

322

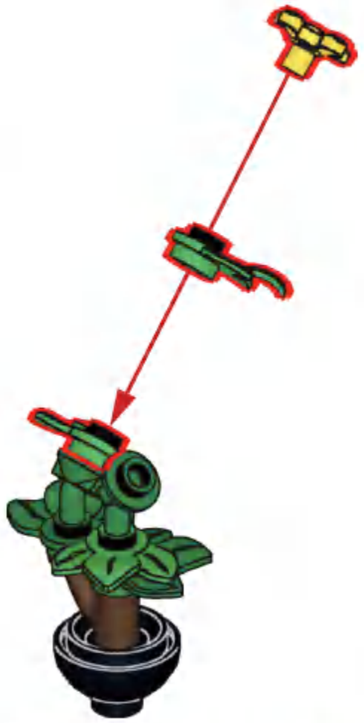

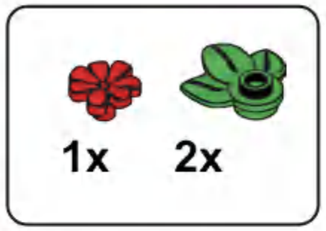

323

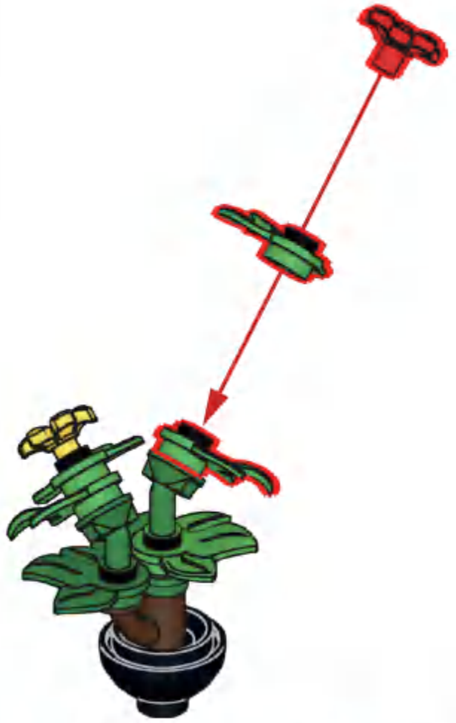

324

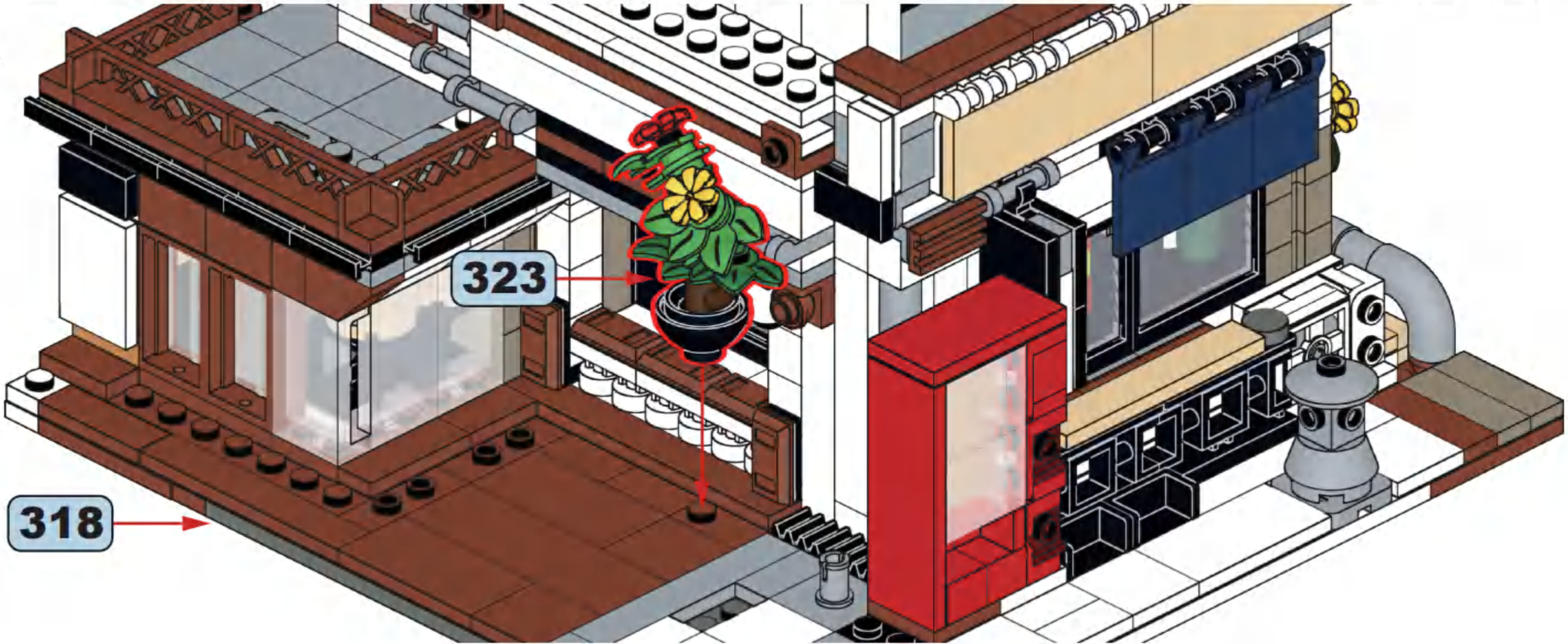

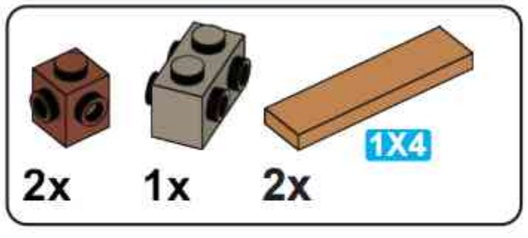

325

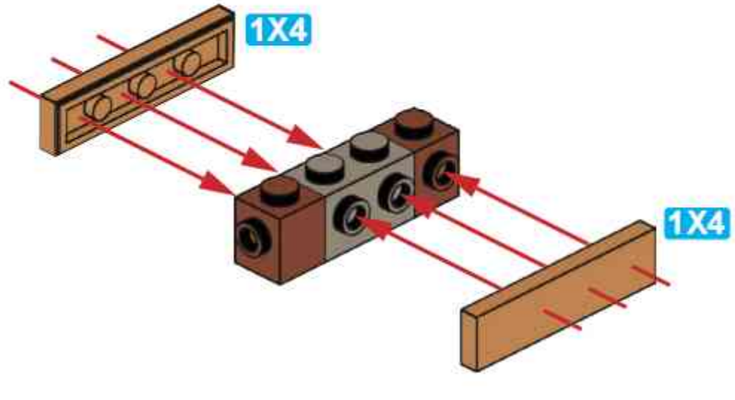

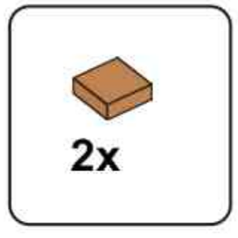

326

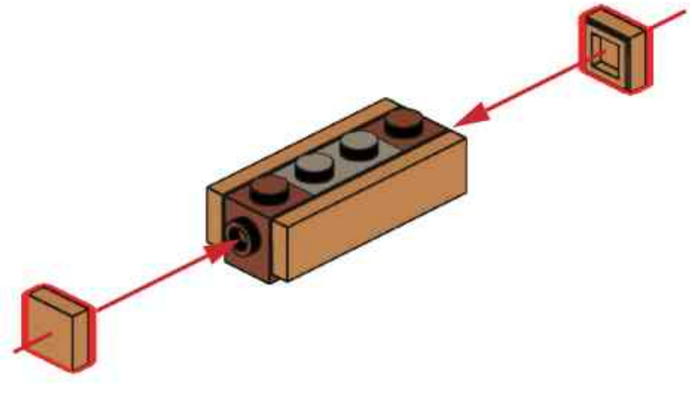

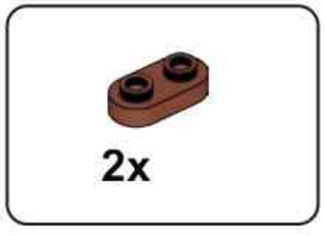

327

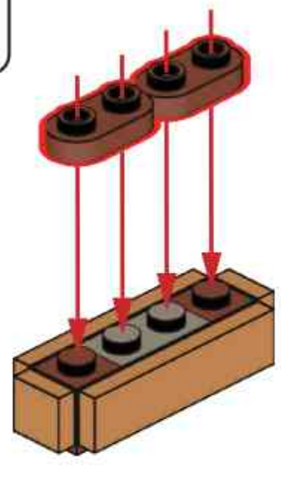

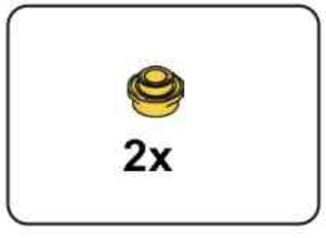

328

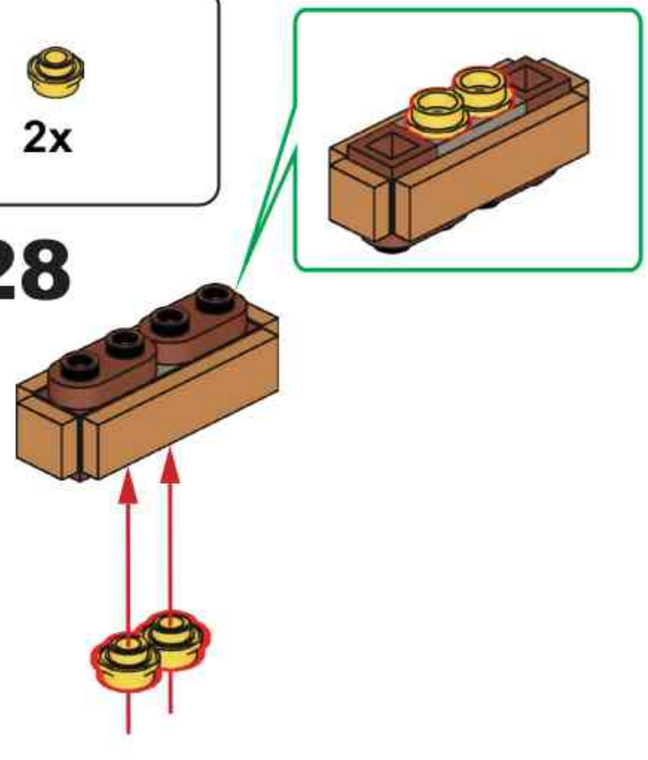

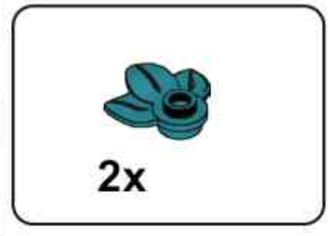

329

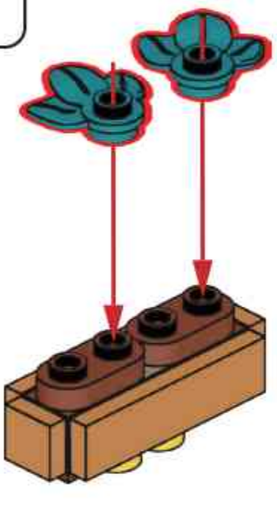

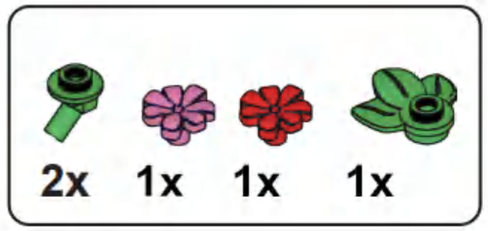

330

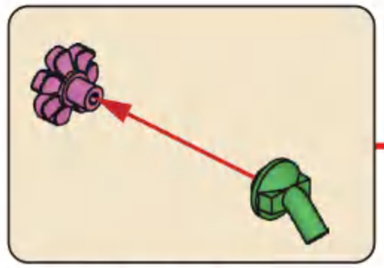

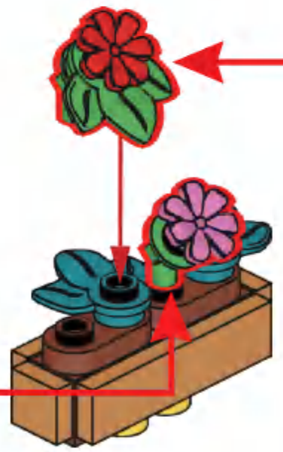

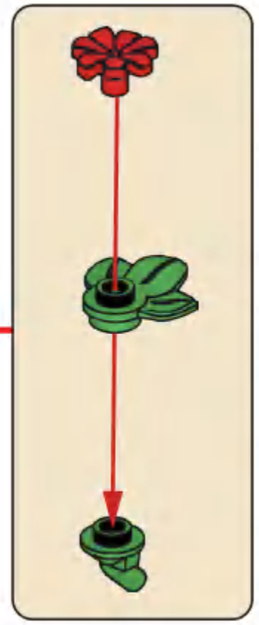

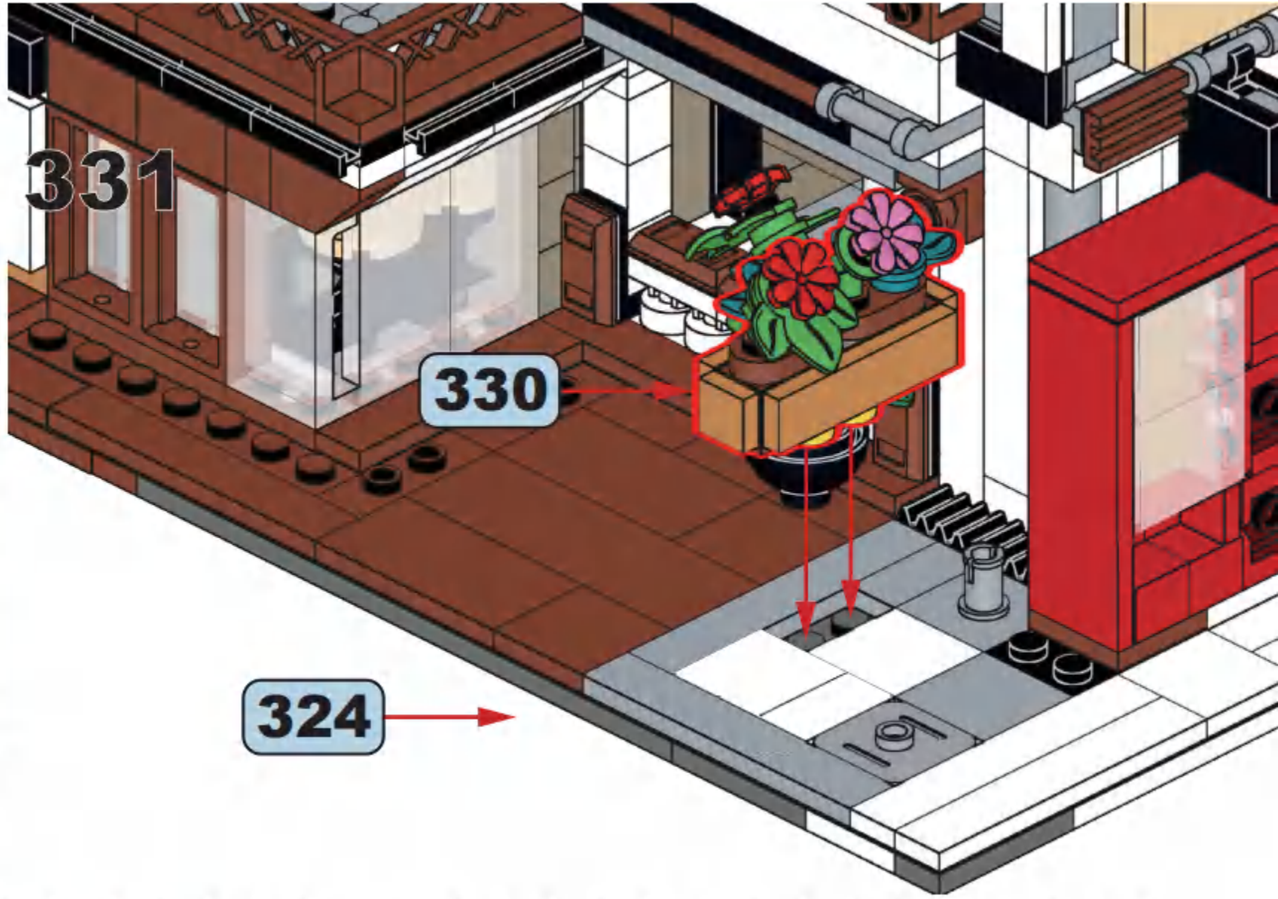

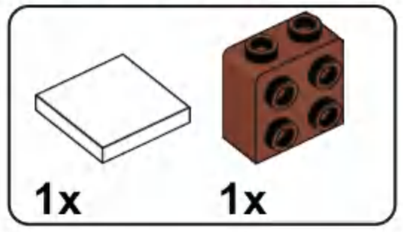

332

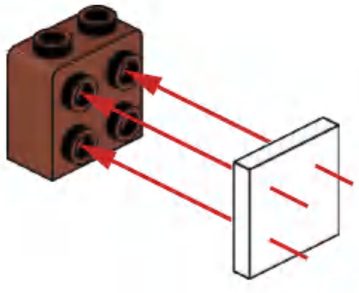

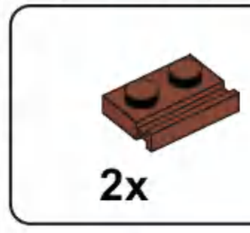

333

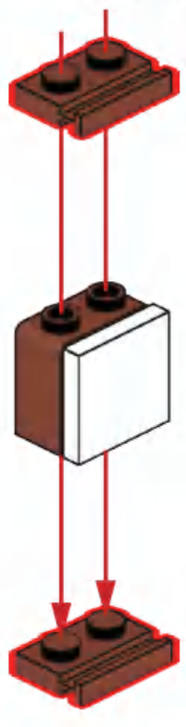

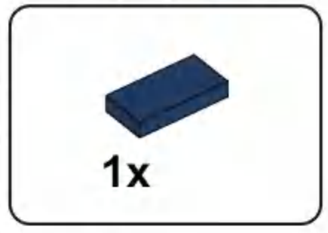

334

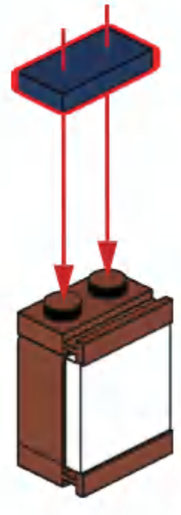

335

334

331

1x 1x

336

337

2x

338

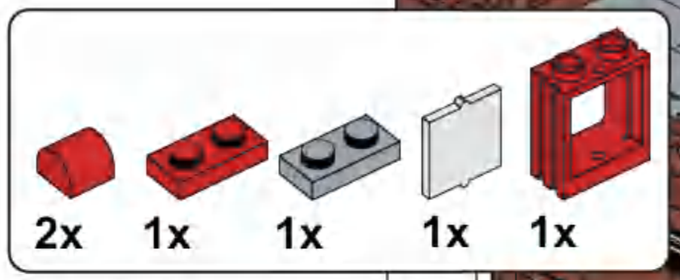

339

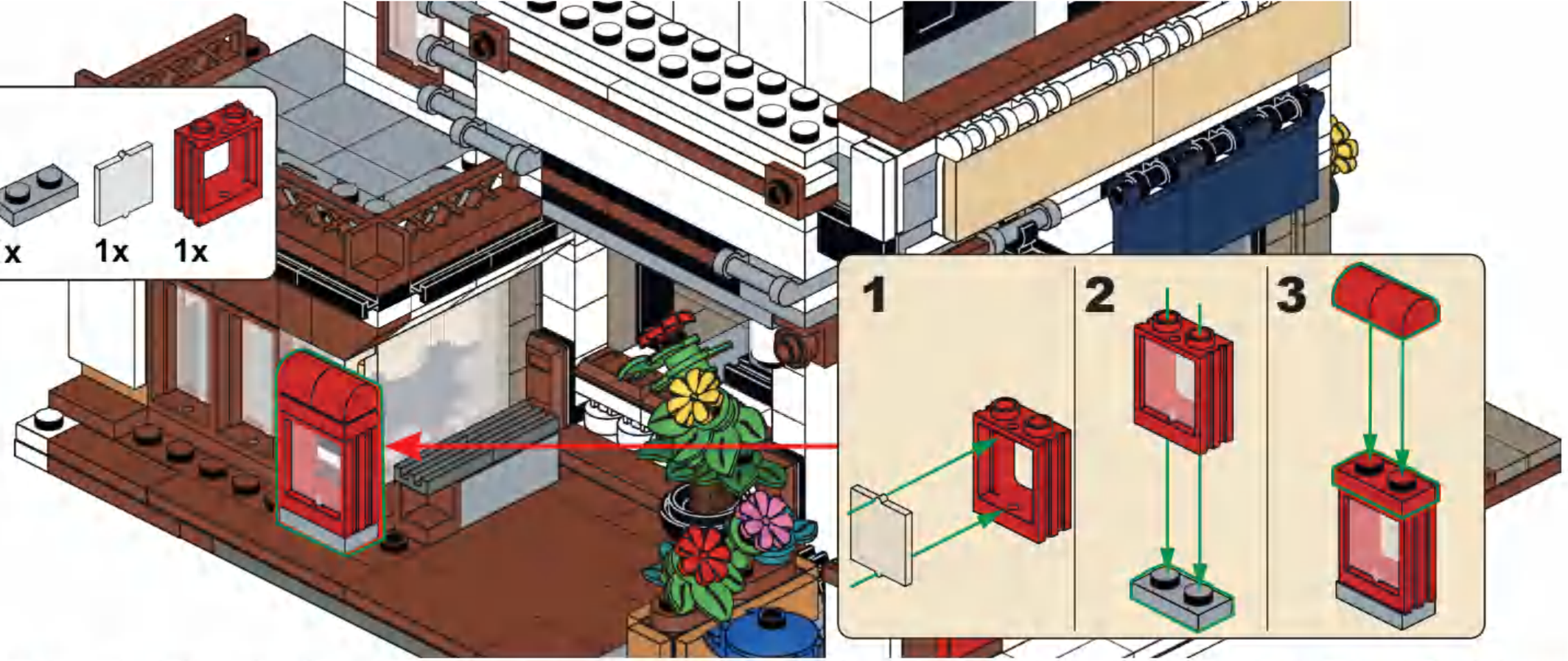

340

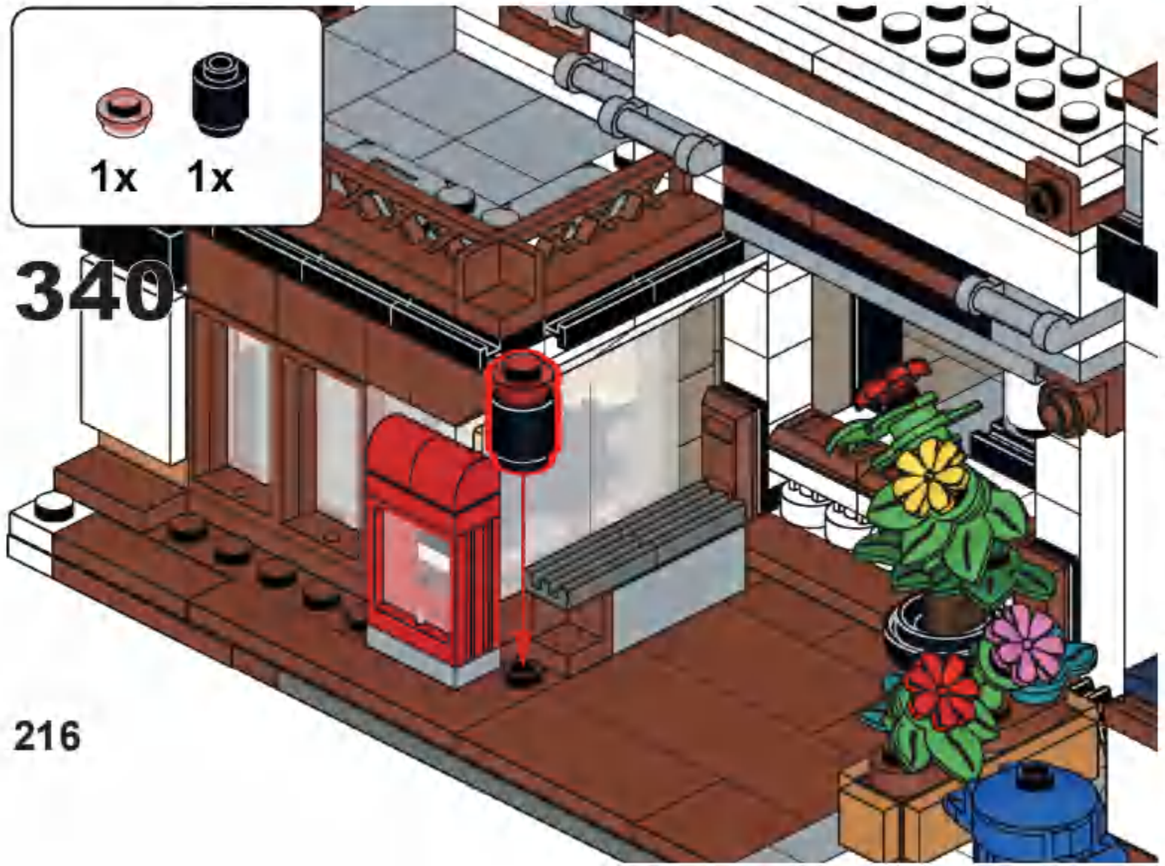

216

341

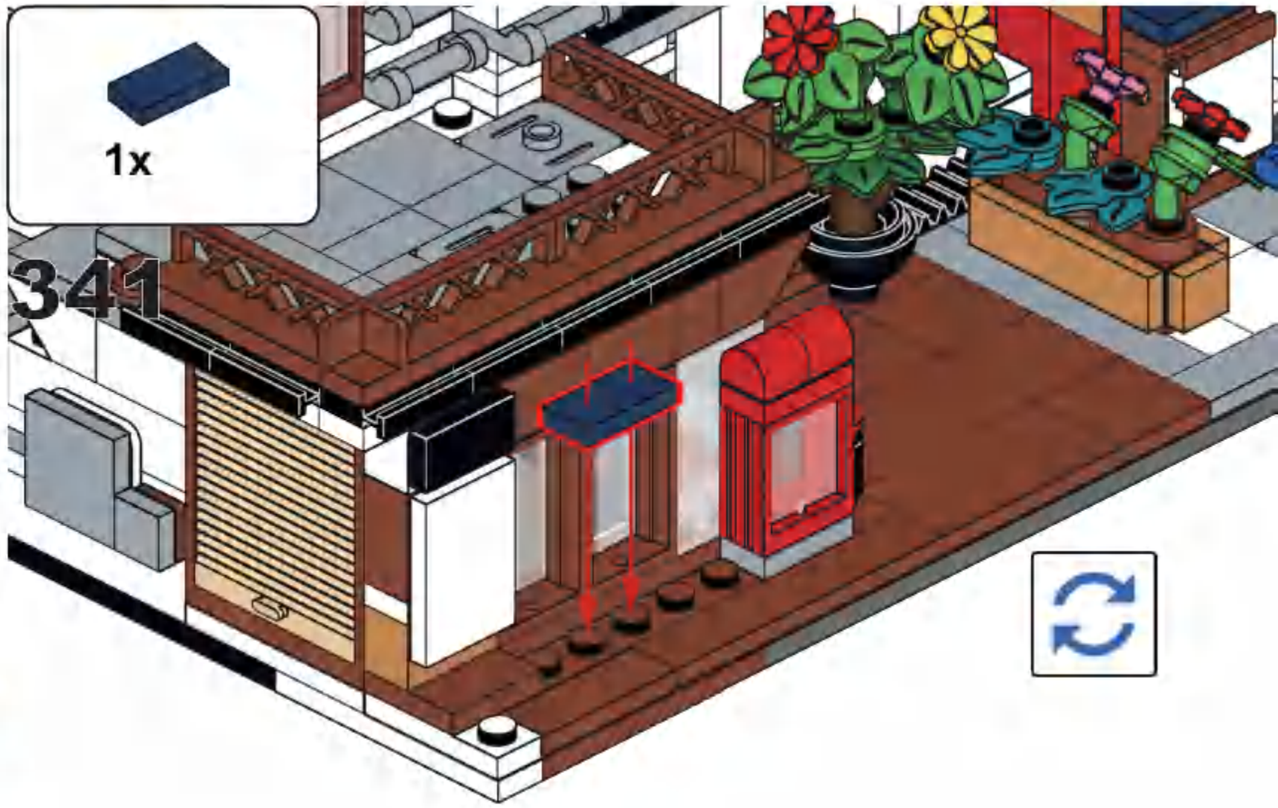

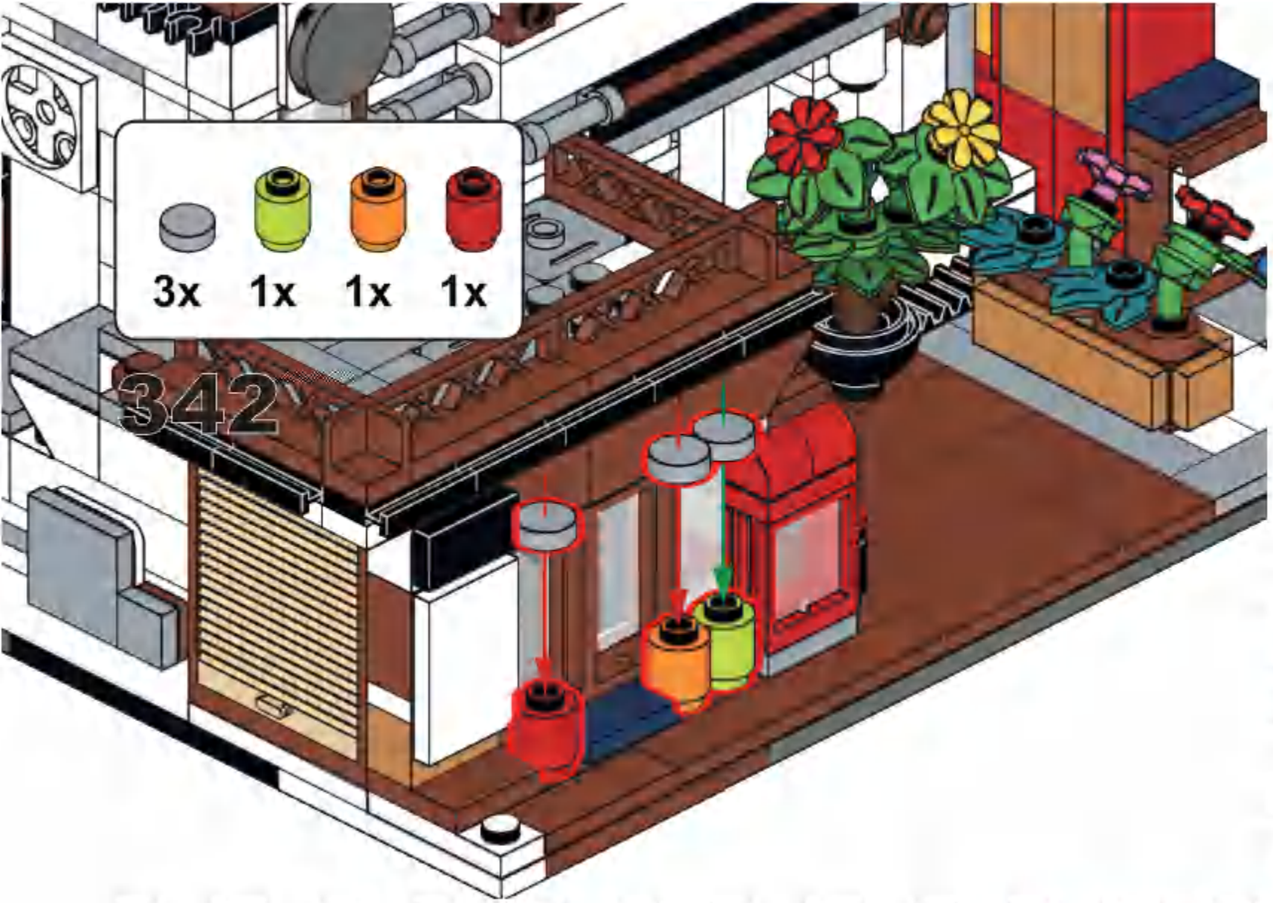

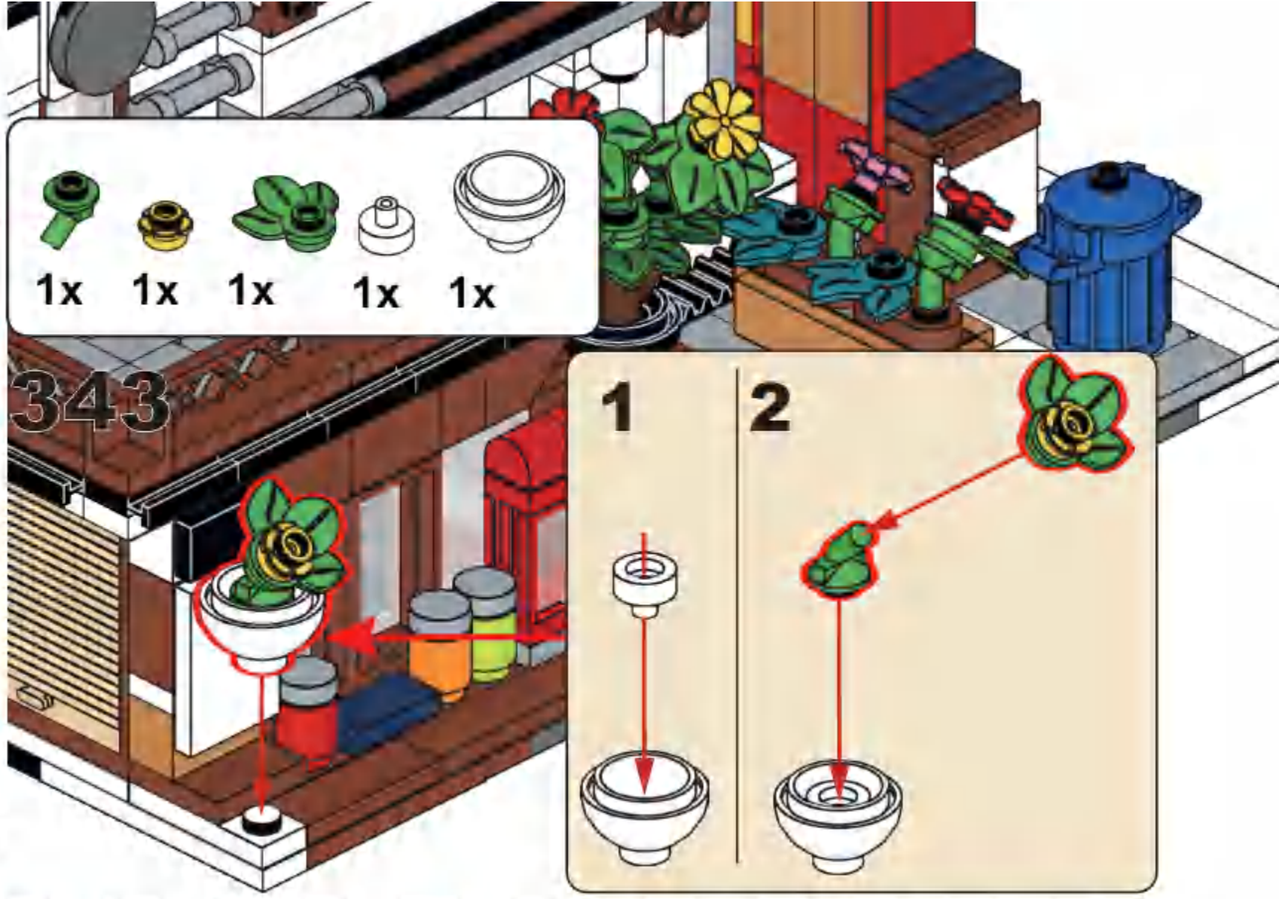

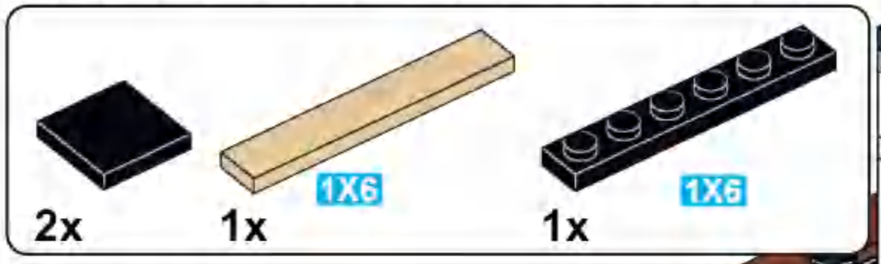

344

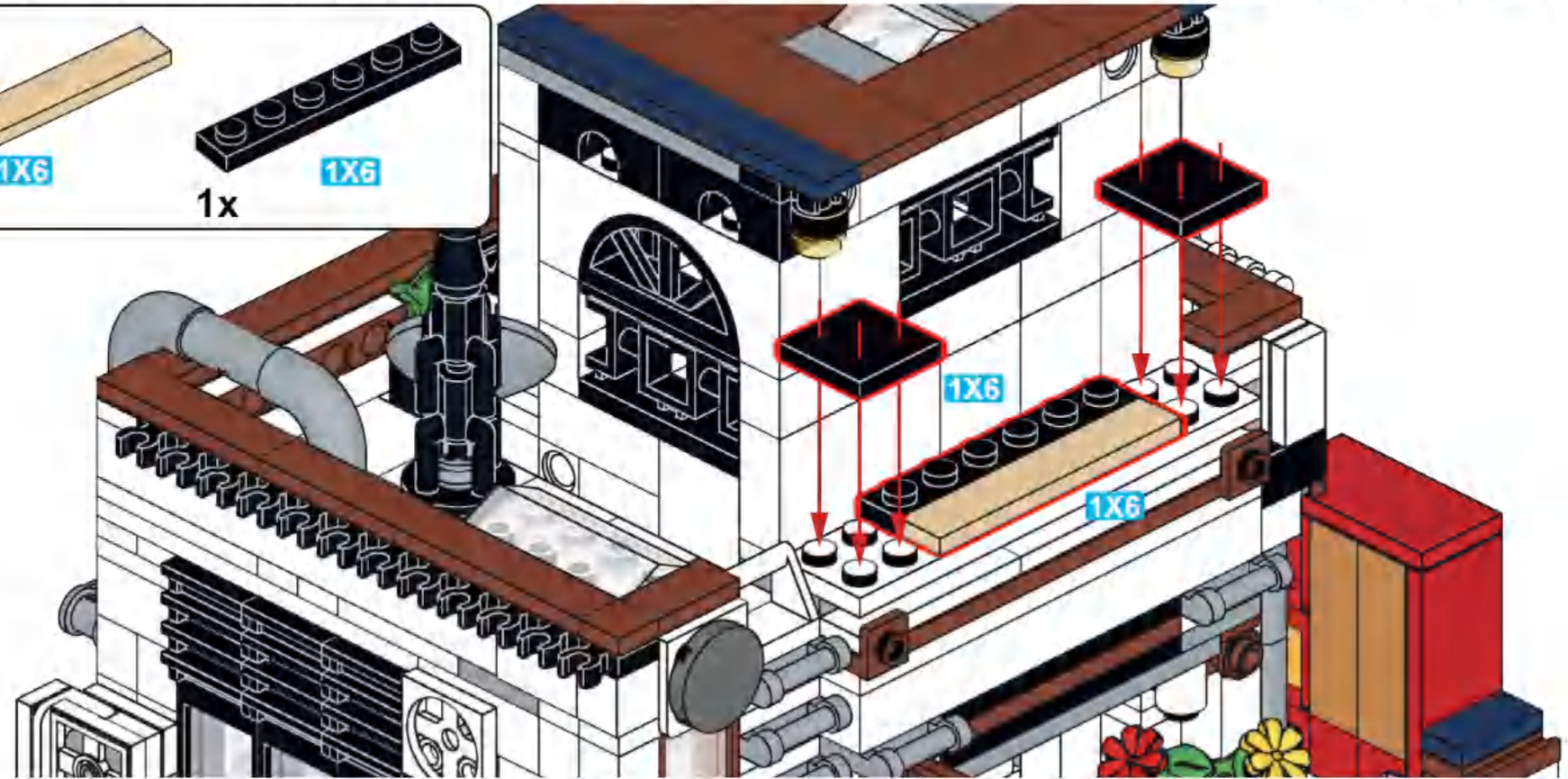

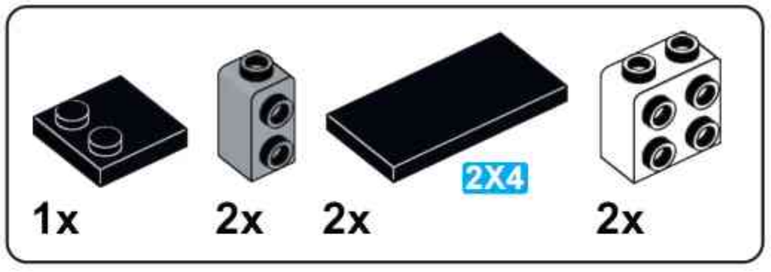

345

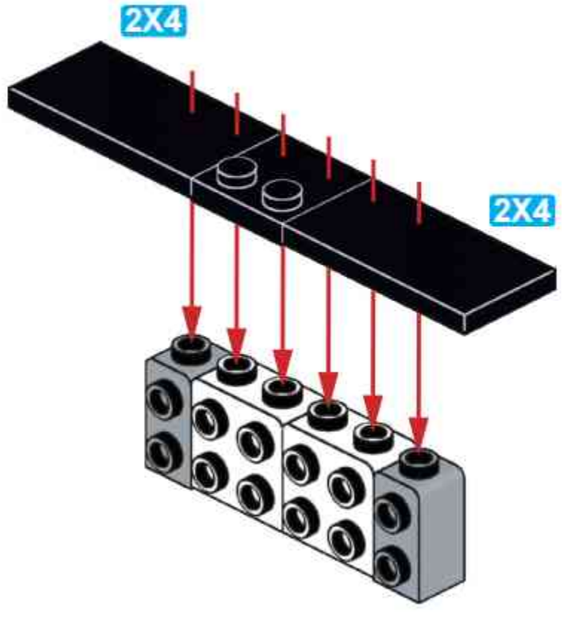

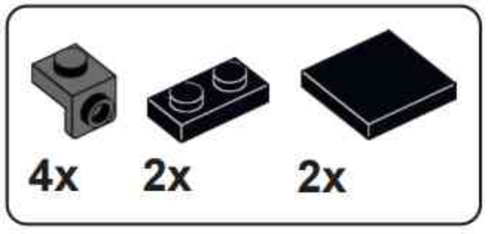

346

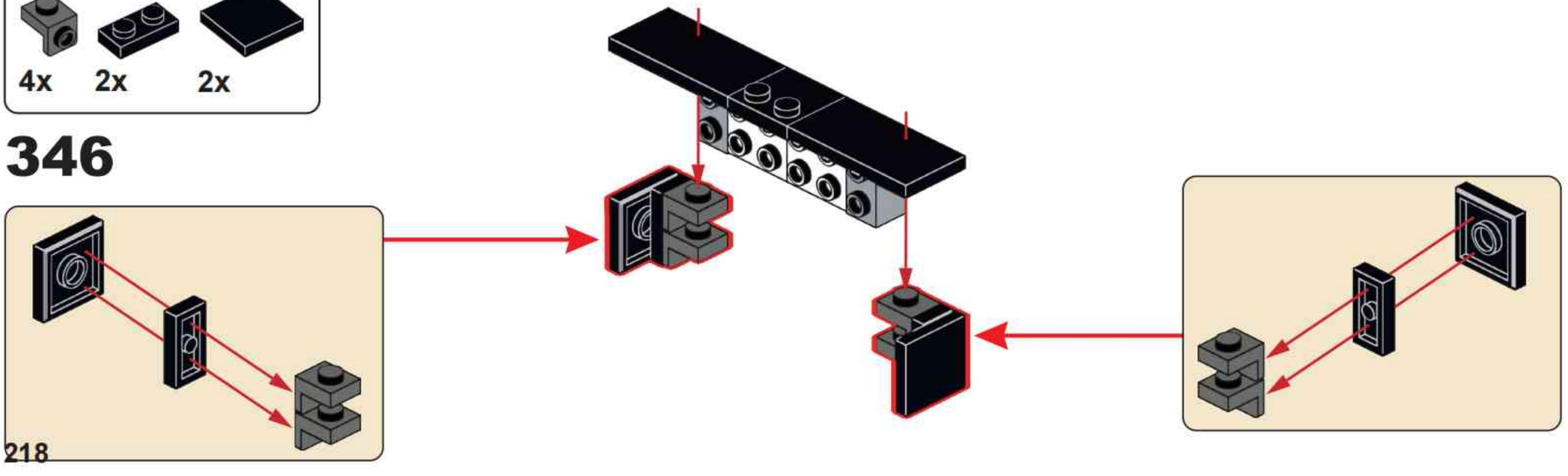

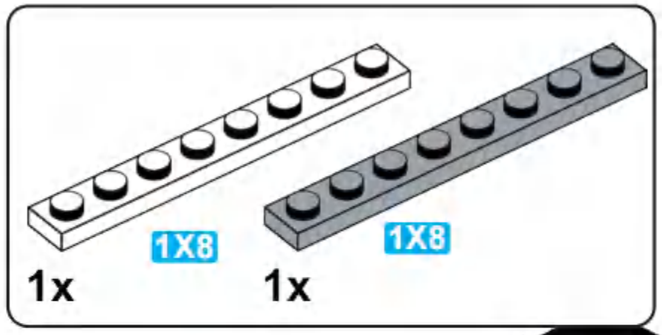

347

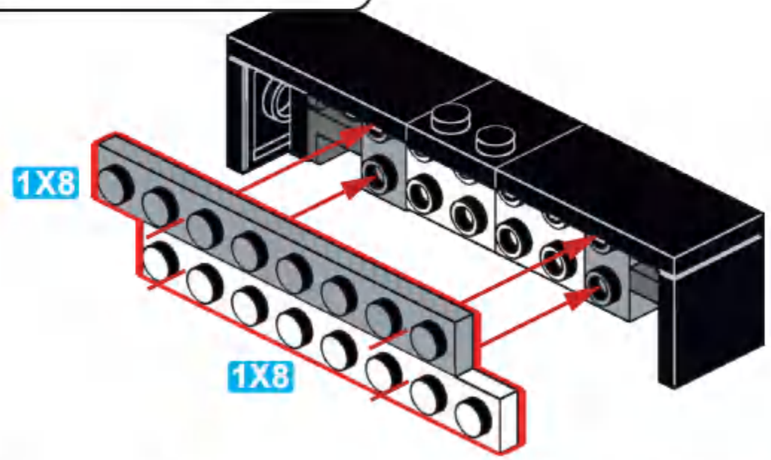

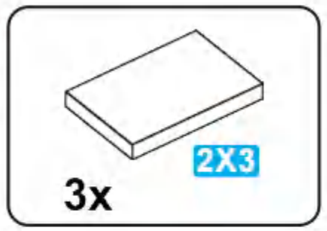

348

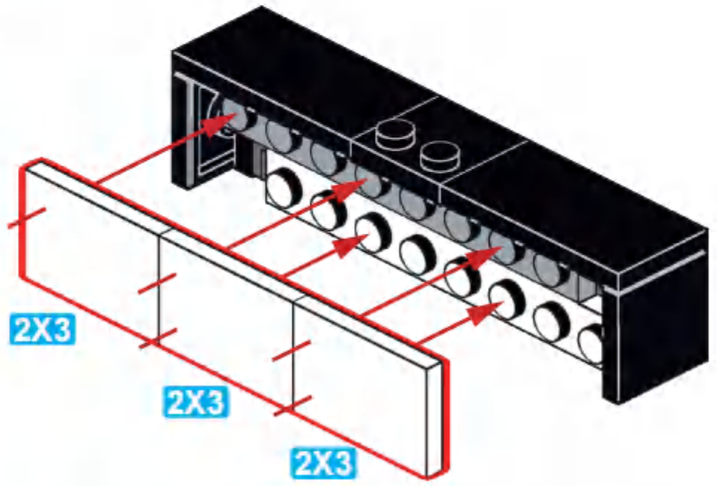

349

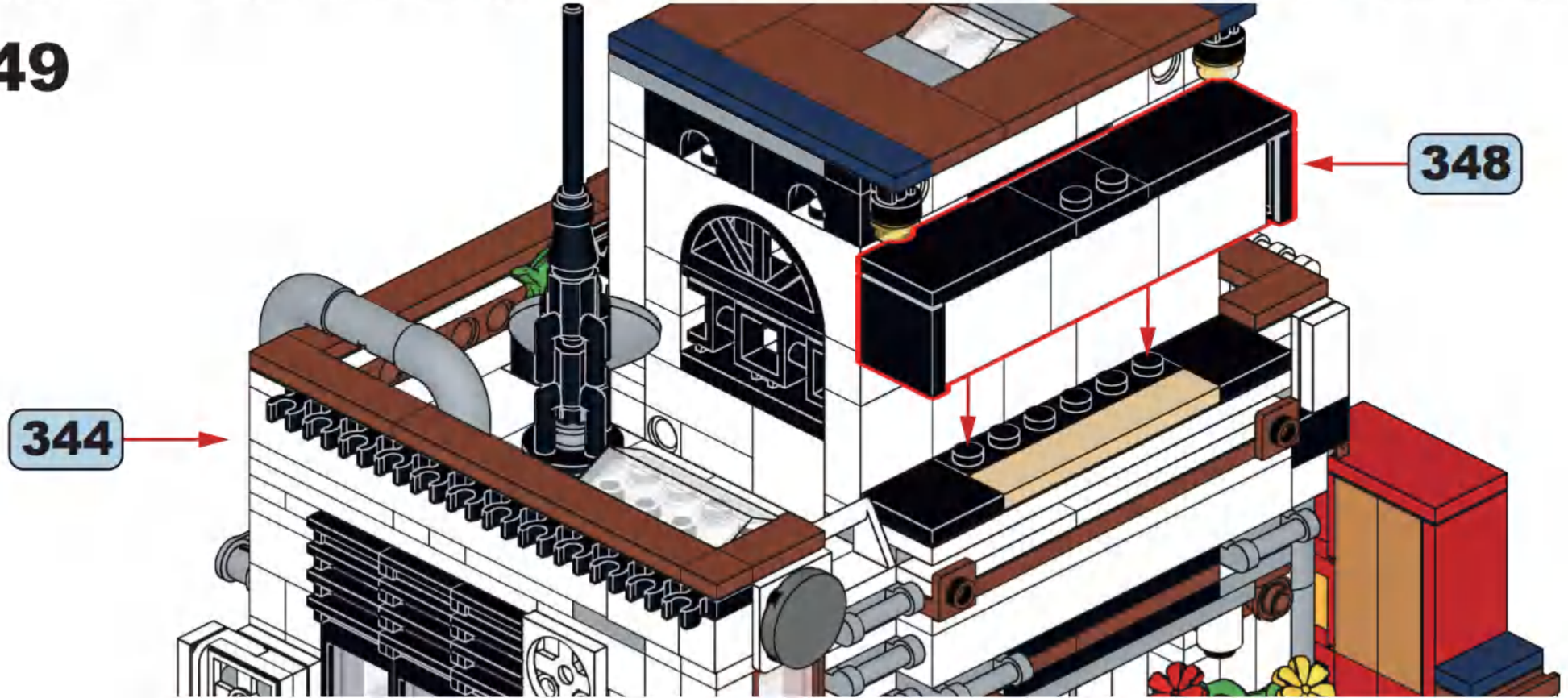

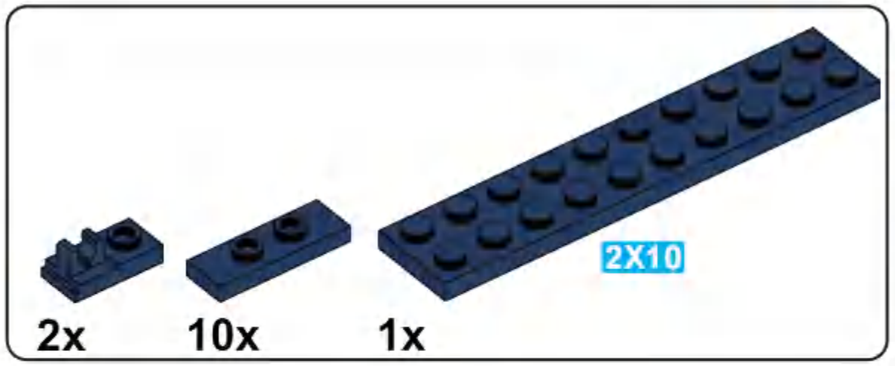

350

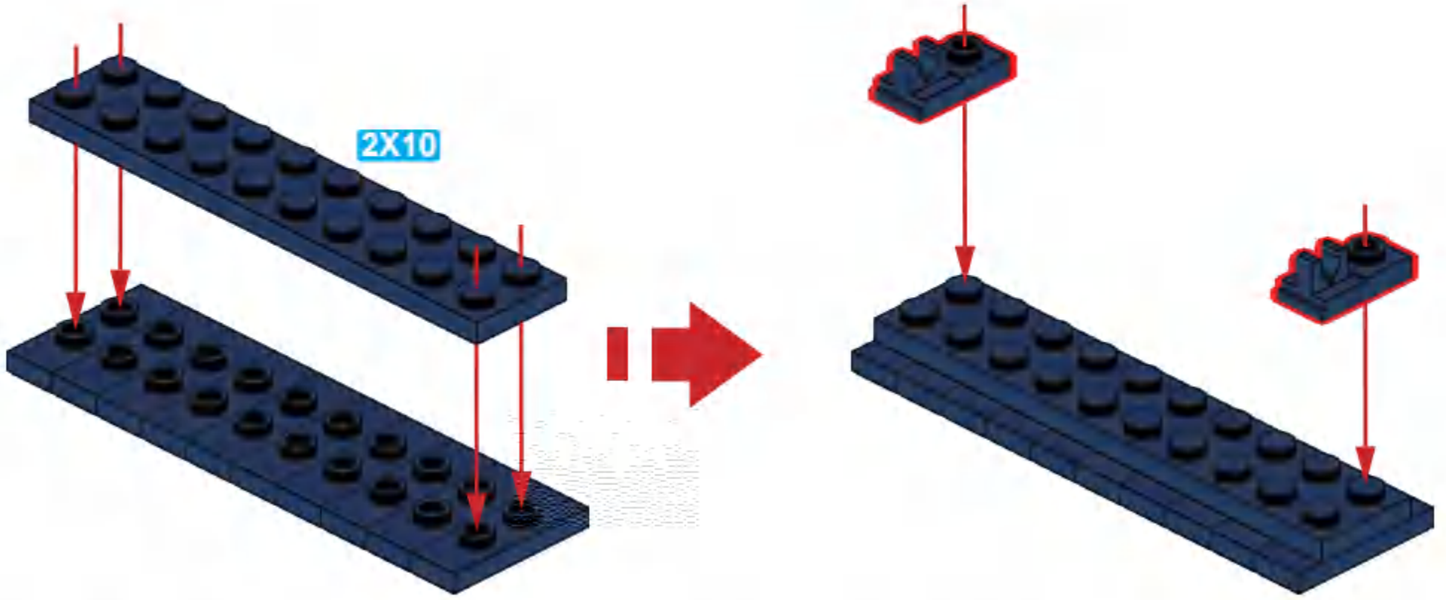

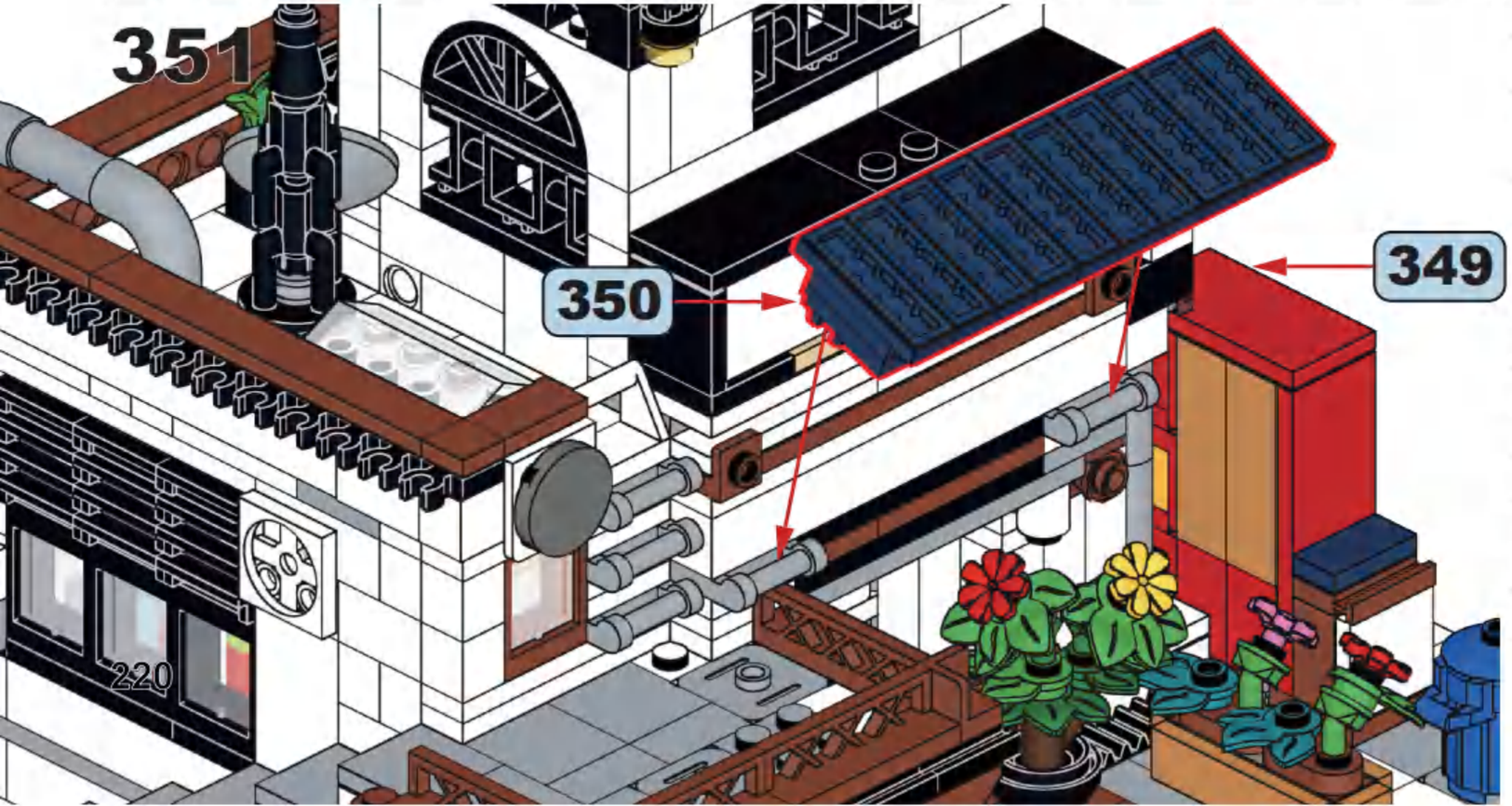

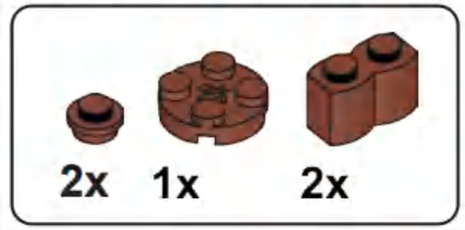

352

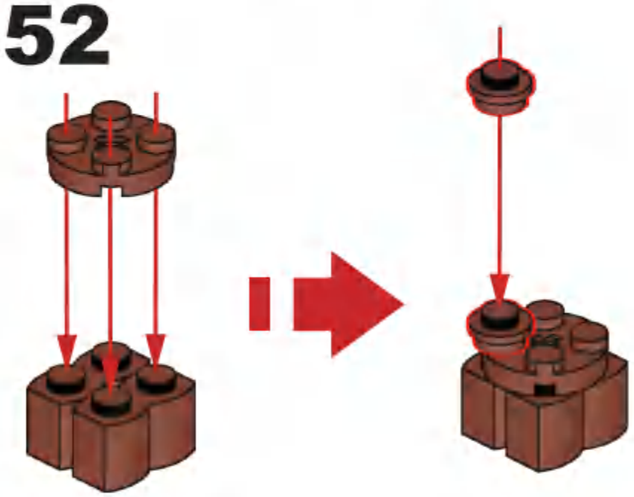

2x 1x

353

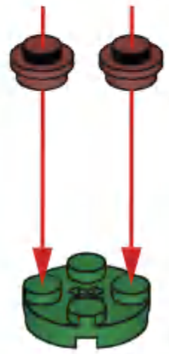

3x

354

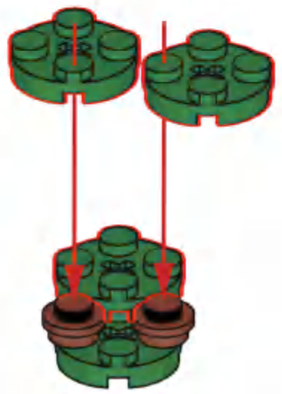

1x

355

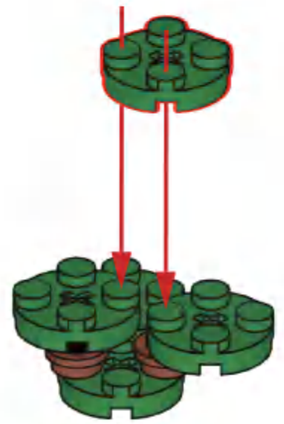

356

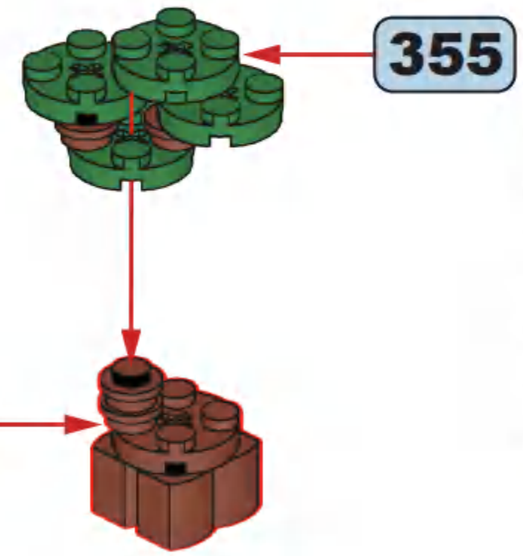

357

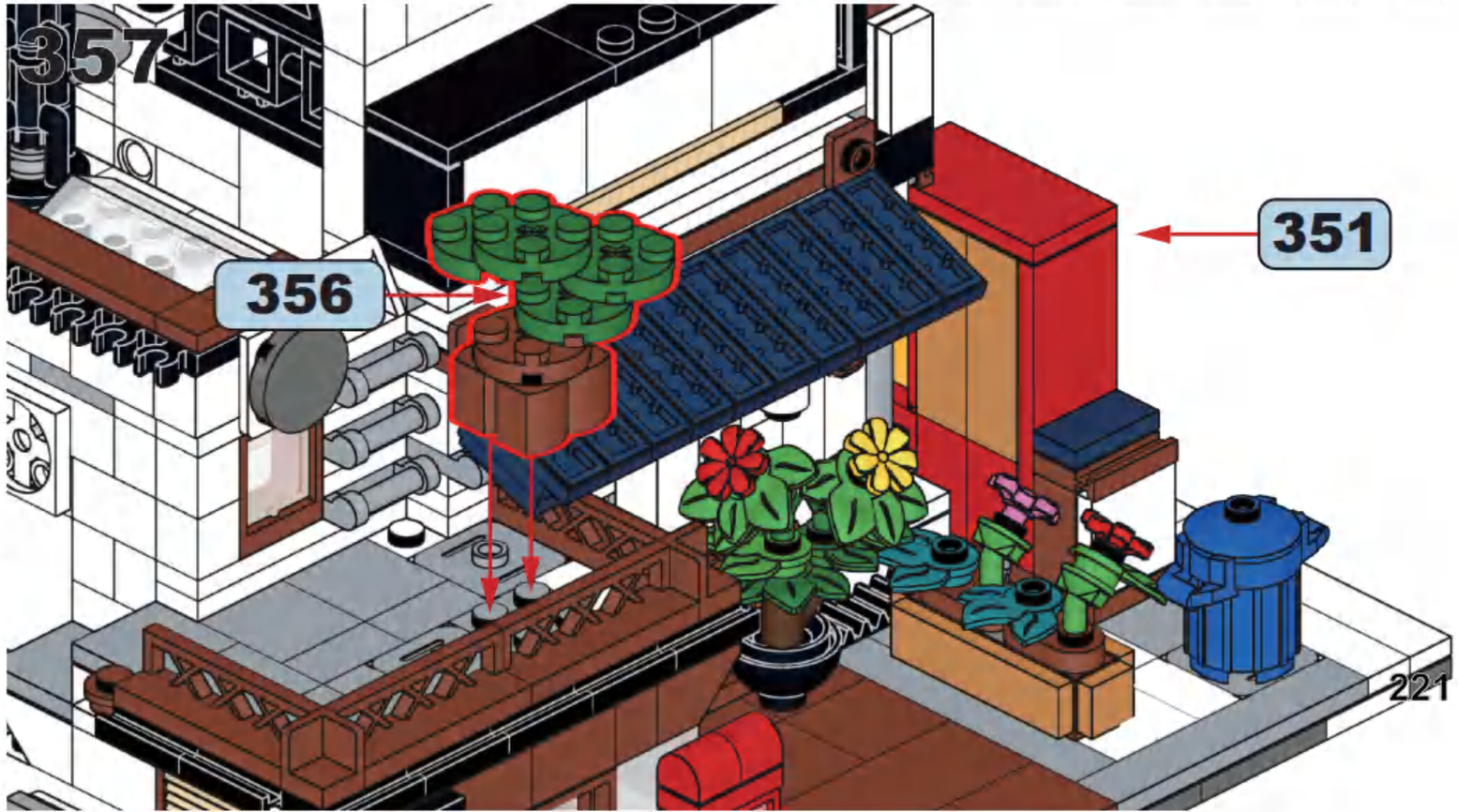

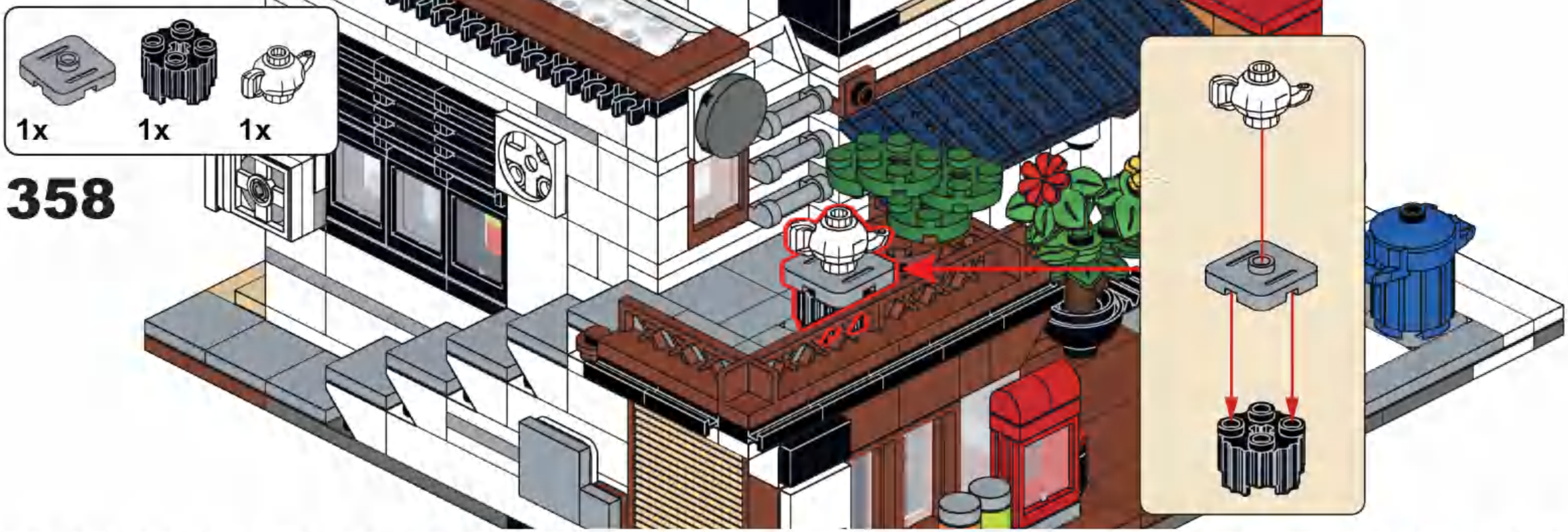

358

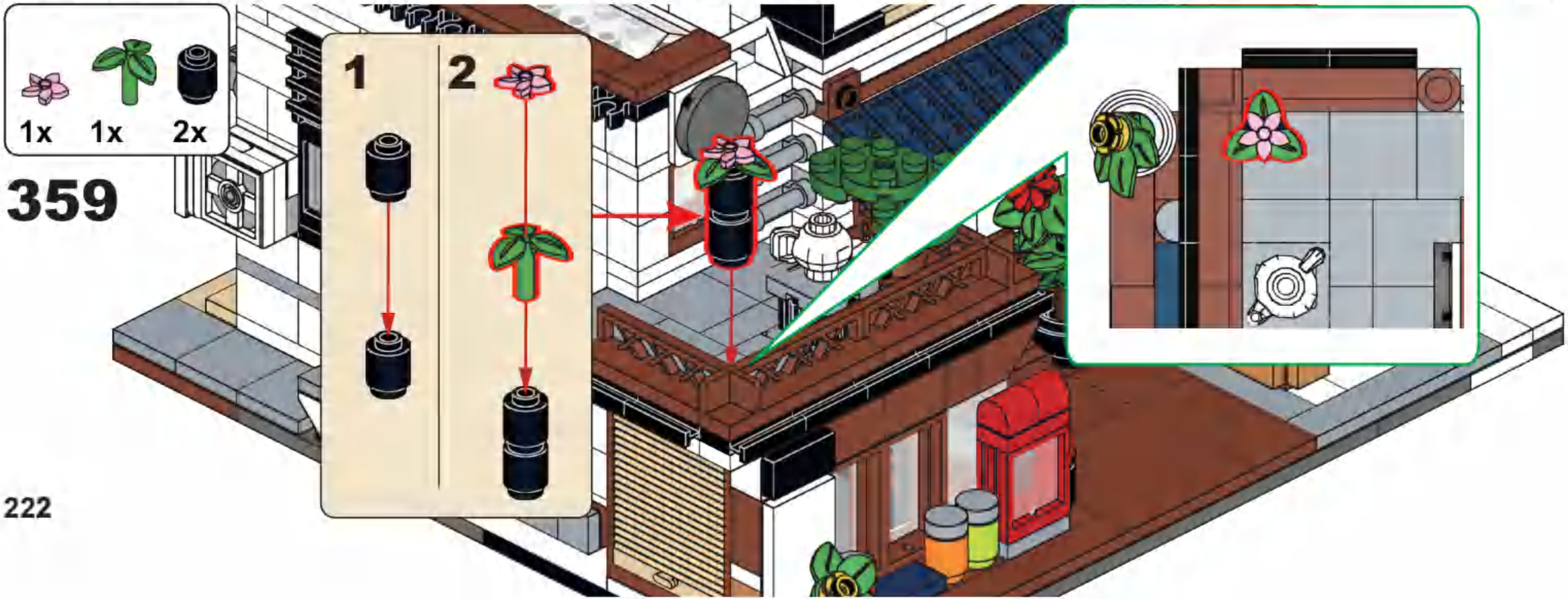

359

2x

360

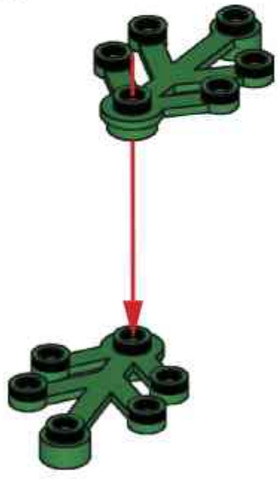

1x

361

1x 2x

362

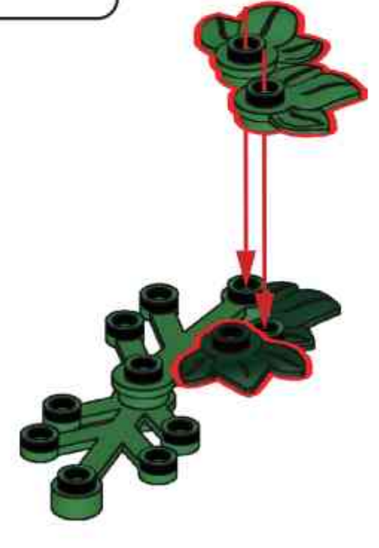

2x 1x

363

2x

364

1x

365

3x

366

1x 2x

367

368

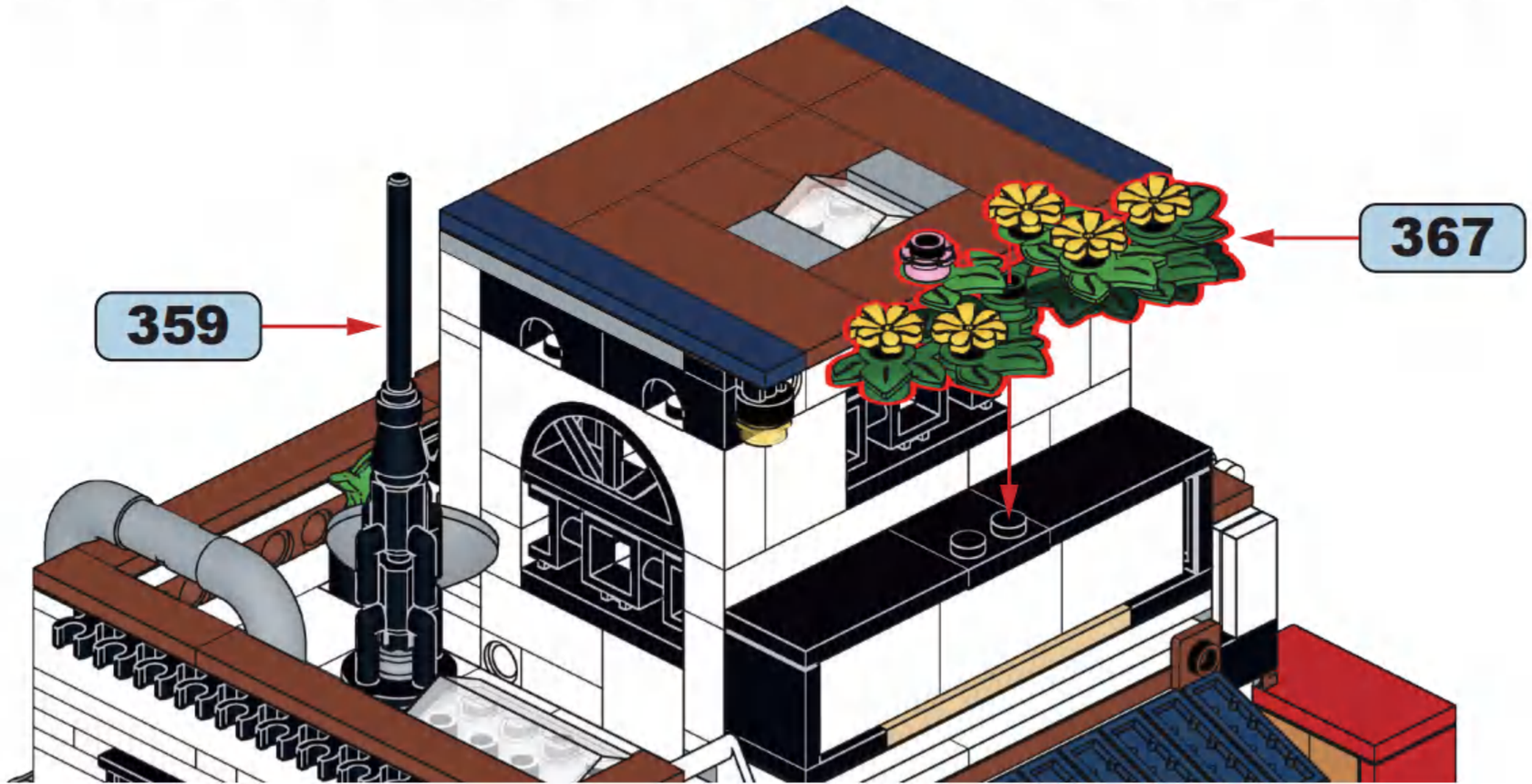

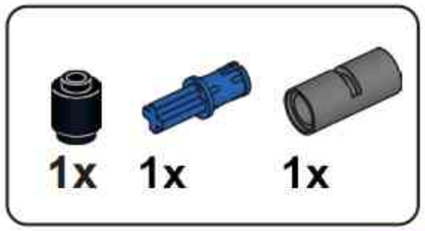

369

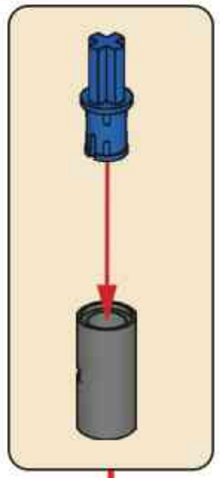

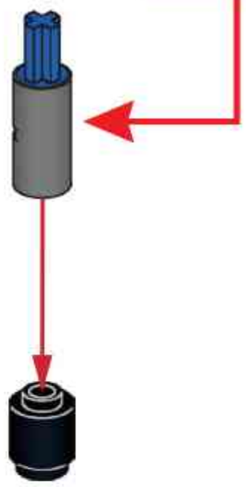

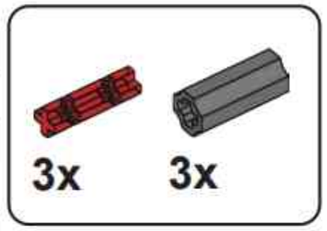

370

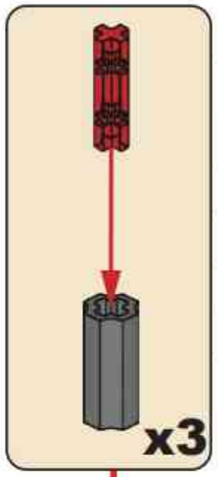

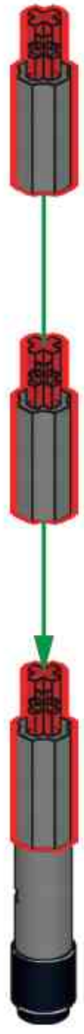

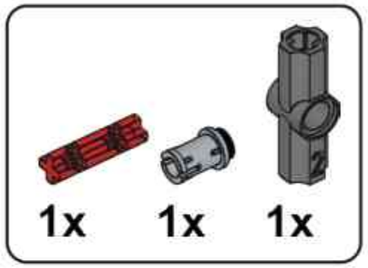

371

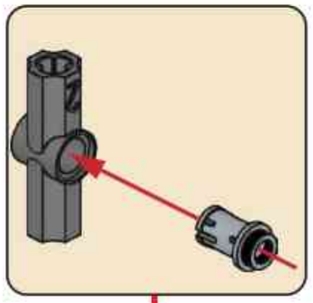

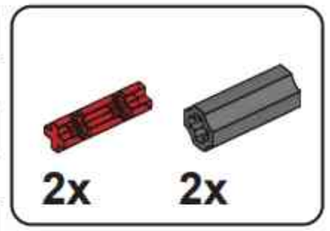

372

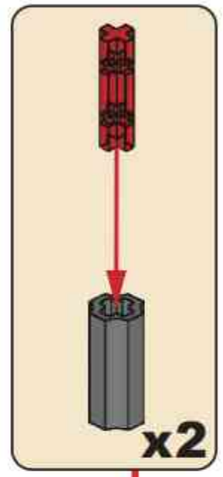

1x 1x

373

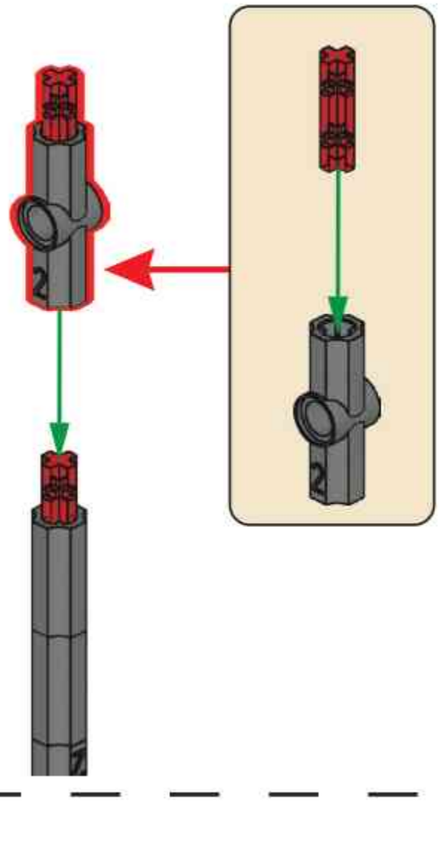

2x 1x

374

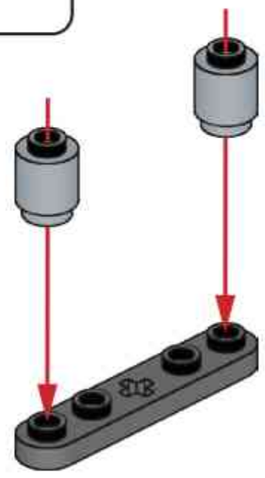

2x

375

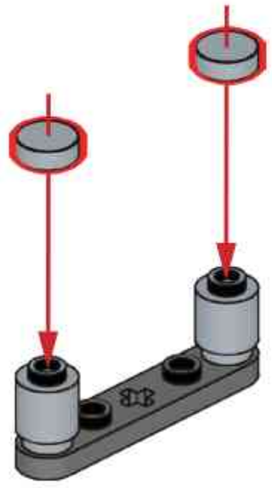

2x

376

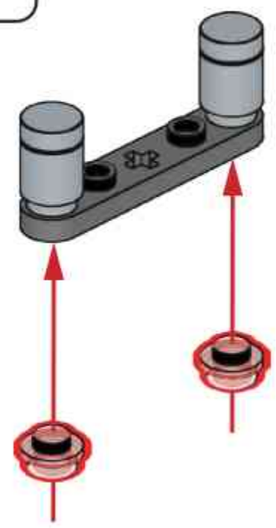

1x

377

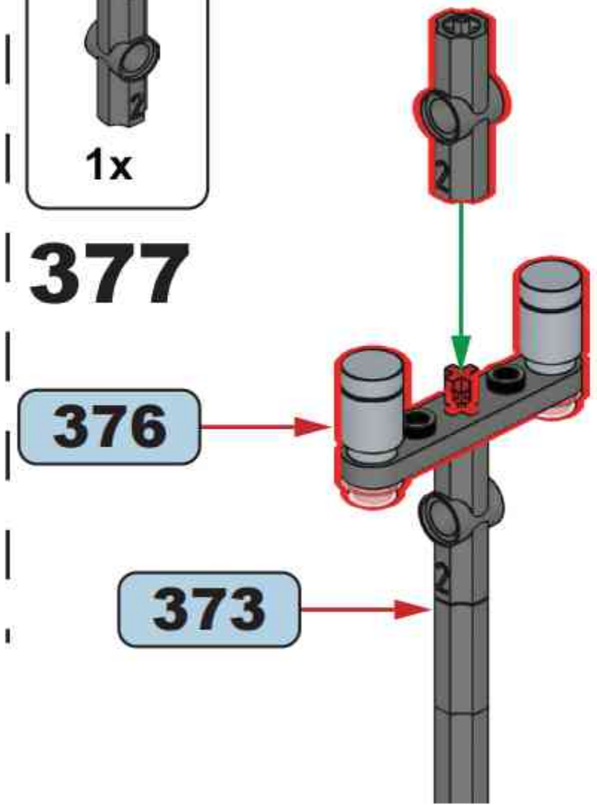

4x 2x

378

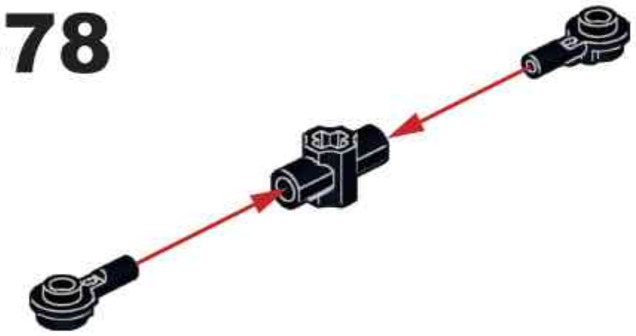

x2

4x

379

x2

1x 1x

4

380

4

1x

381

379

382

381

377

1x 1x 1x

383

4

1x

384

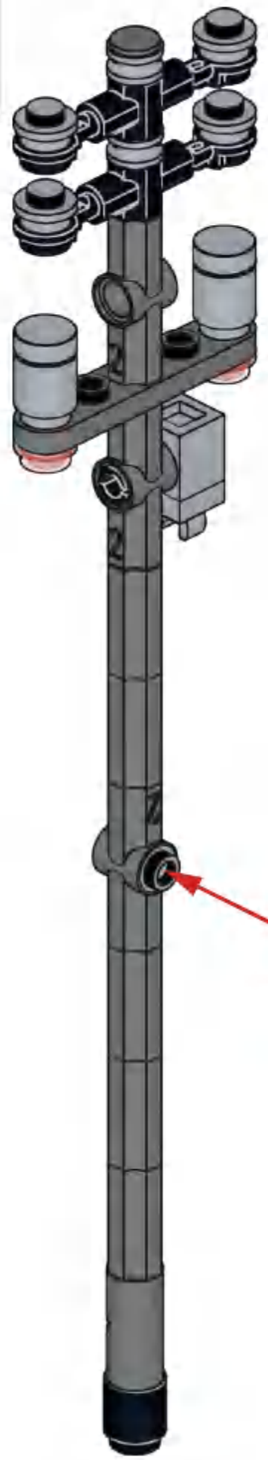

385

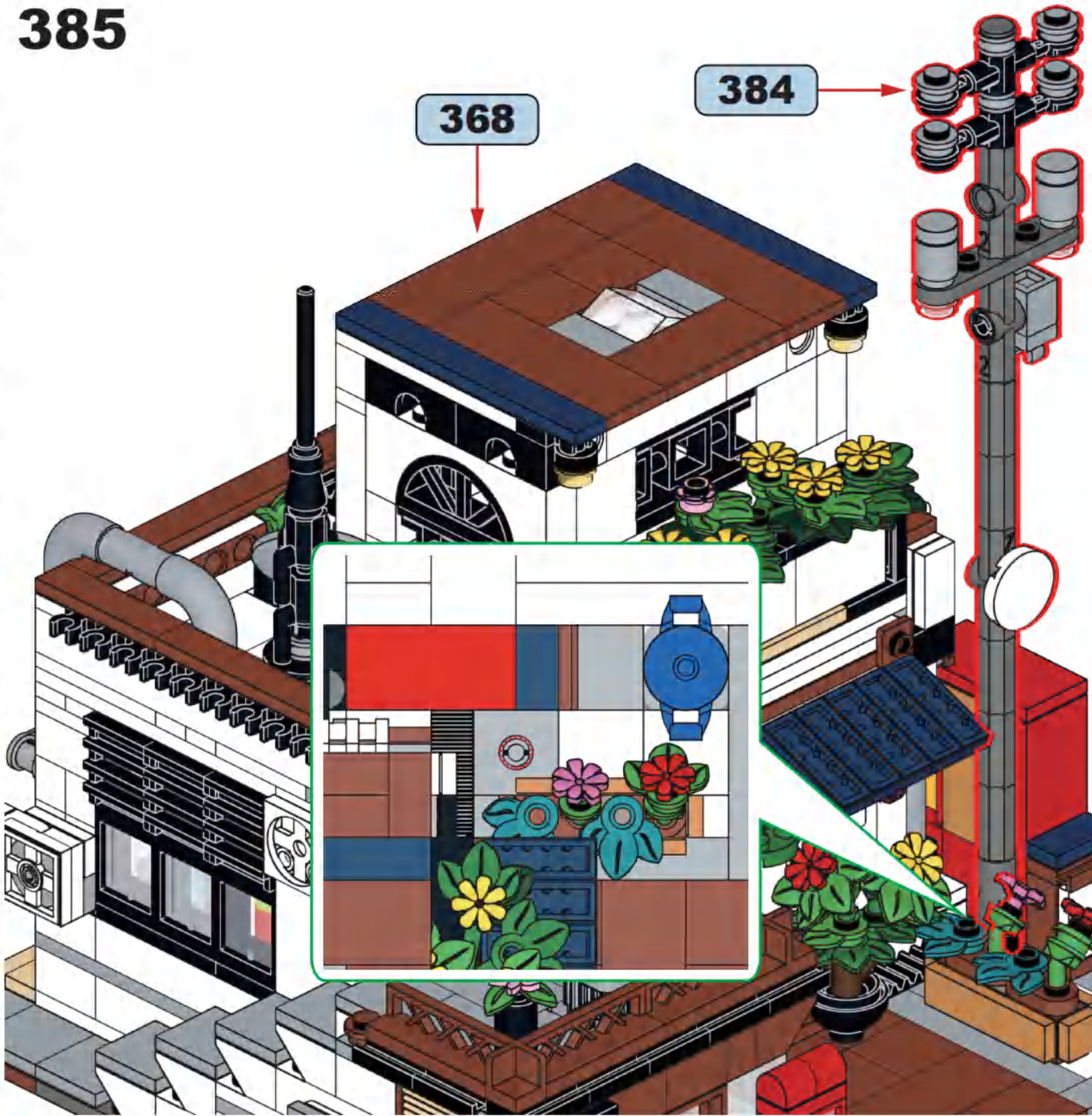

ラーメン
美
味
し
1
2
9
10
11
12
13
14
15
22

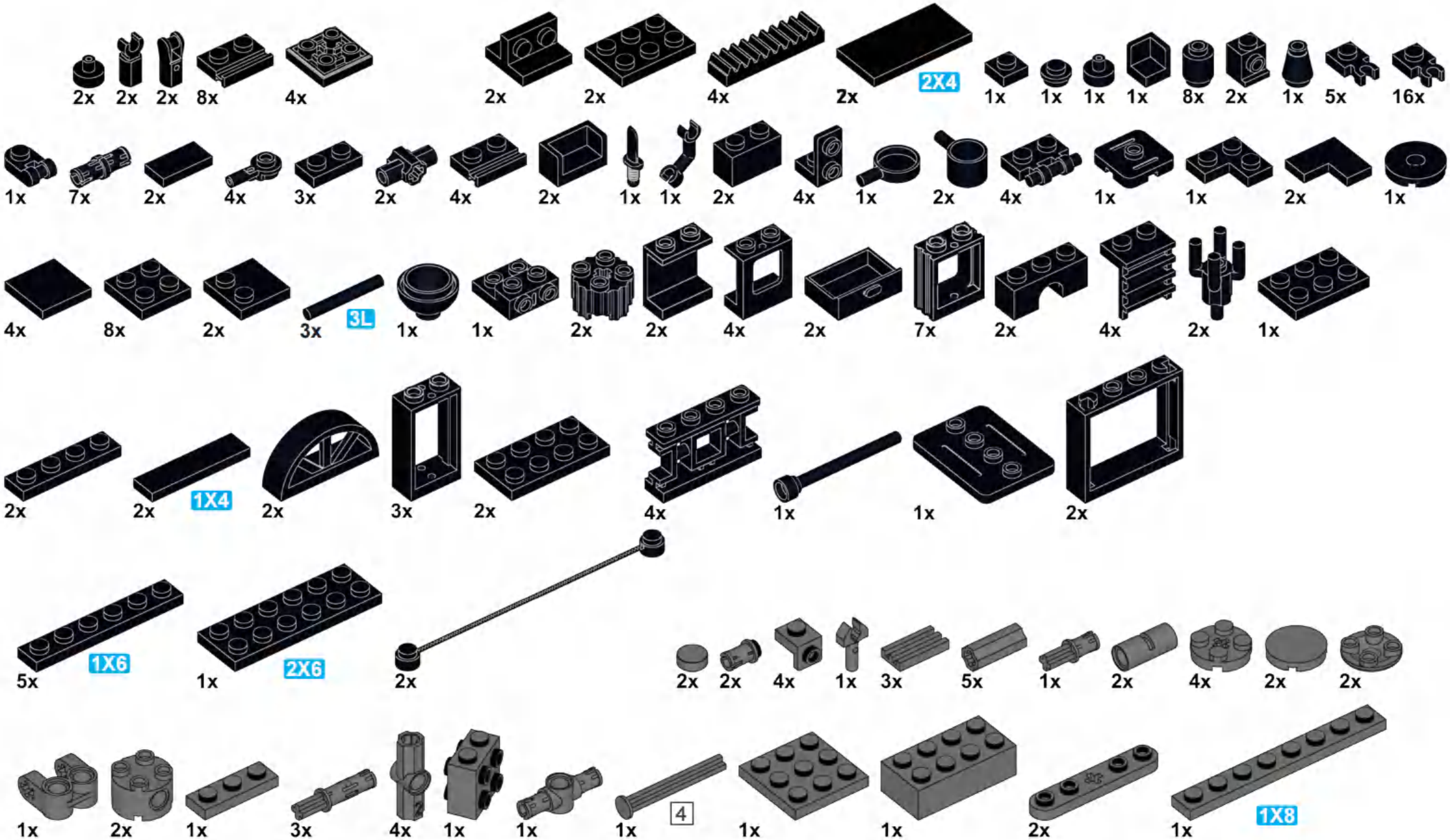
2x
2x
2x
8x
4x
2x
2x
4x
2x
2X4
1x
1x
1x
1x
8x
2x
1x
5x
16x
1x
7x
2x
4x
3x
2x
4x
2x
1x
1x
2x
4x
1x
2x
4x
1x
1x
2x
1x
4x
8x
2x
3x
3L
1x
1x
2x
2x
4x
2x
7x
2x
4x
2x
1x
2x
2x
1X4
2x
3x
2x
4x
1x
1x
2x
5x
1X6
1x
2X6
2x
2x
2x
4x
1x
3x
5x
1x
2x
4x
2x
2x
1x
2x
1x
3x
4x
1x
1x
4
1x
1x
2x
1x
1X8

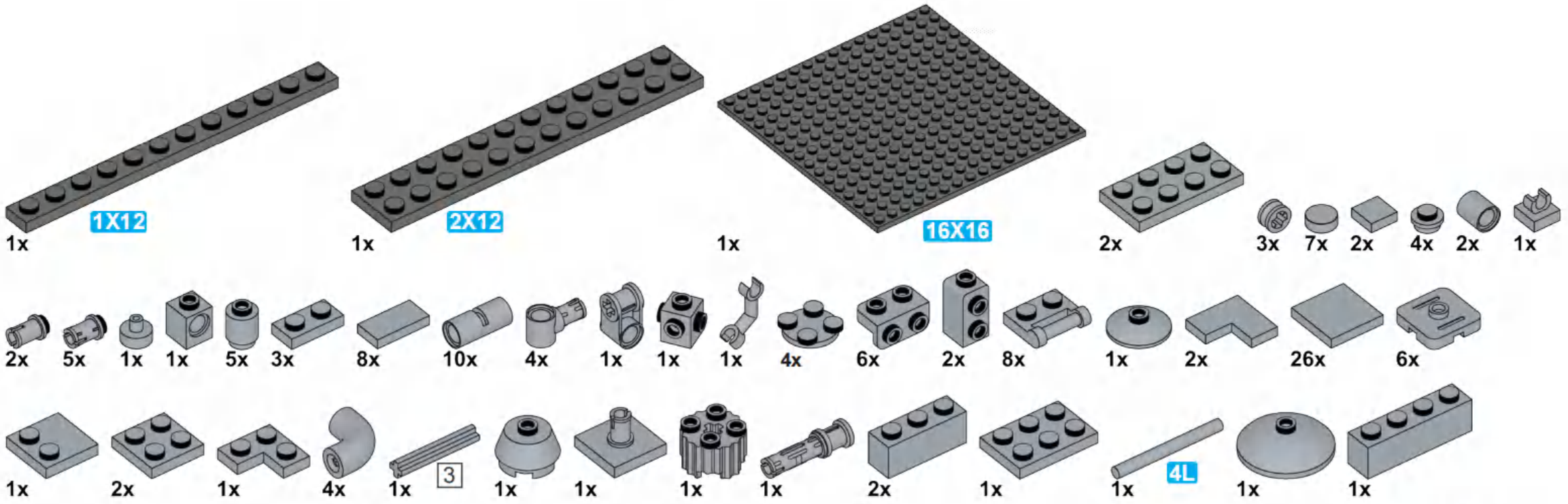
1X12
1x
2X12
1x
16X16
1x
2x
3x
7x
2x
4x
2x
1x
2x
5x
1x
1x
5x
3x
8x
10x
4x
1x
1x
1x
4x
6x
2x
8x
1x
2x
26x
6x
1x
1x
2x
1x
4x
3
1x
1x
1x
1x
1x
2x
1x
4L
1x
1x

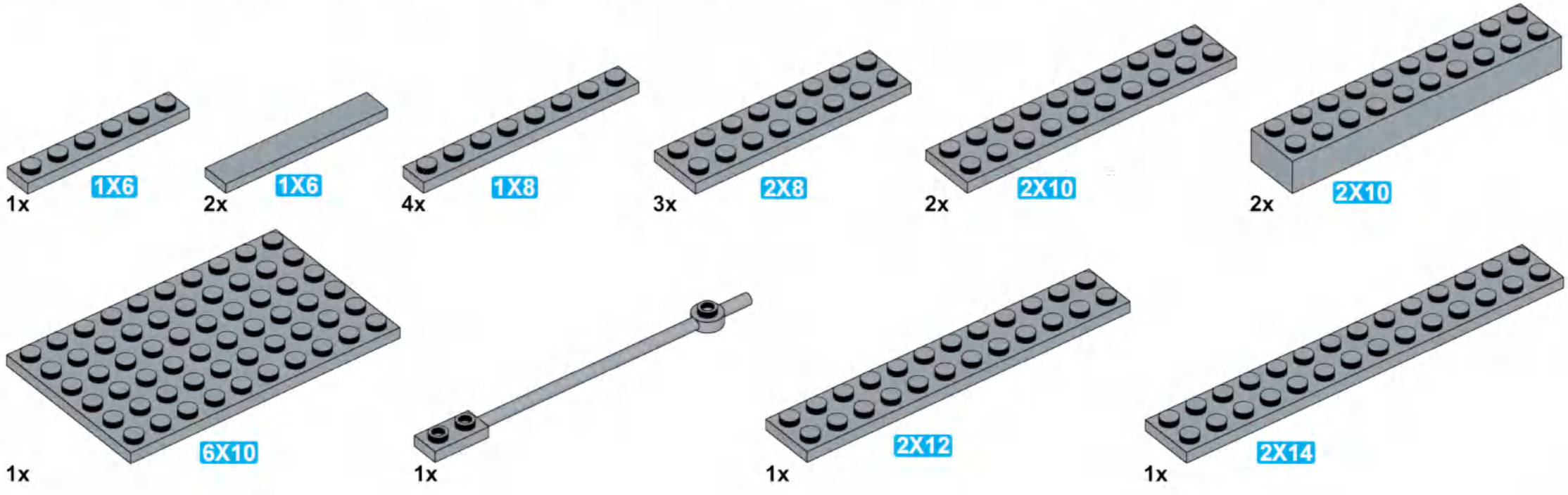
1x
1X6
2x
1X6
4x
1X8
3x
2X8
2x
2X10
2x
2X10
1x
6X10
1x
1x
2X12
1x
2X14

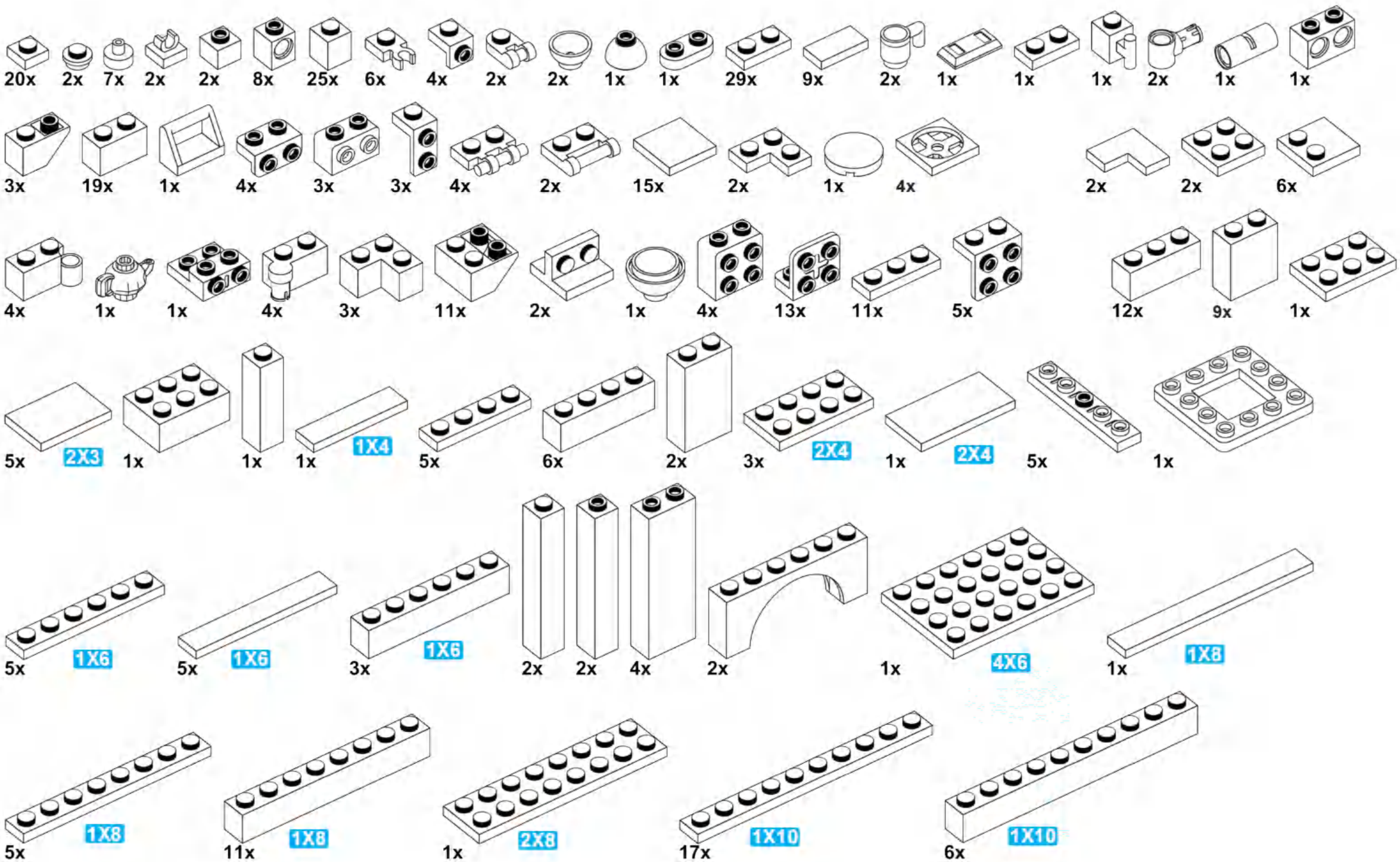
20x
2x
7x
2x
2x
8x
25x
6x
4x
2x
2x
1x
1x
29x
9x
2x
1x
1x
1x
2x
1x
1x
3x
19x
1x
4x
3x
3x
4x
2x
15x
2x
1x
4x
2x
2x
6x
4x
1x
1x
4x
3x
11x
2x
1x
4x
13x
11x
5x
12x
9x
1x
5x
2X3
1x
1x
1x
1X4
5x
6x
2x
3x
2X4
1x
2X4
5x
1x
5x
1X6
5x
1X6
3x
1X6
2x
2x
4x
2x
1x
4X6
1x
1X8
5x
1X8
11x
1X8
1x
2X8
17x
1X10
6x
1X10

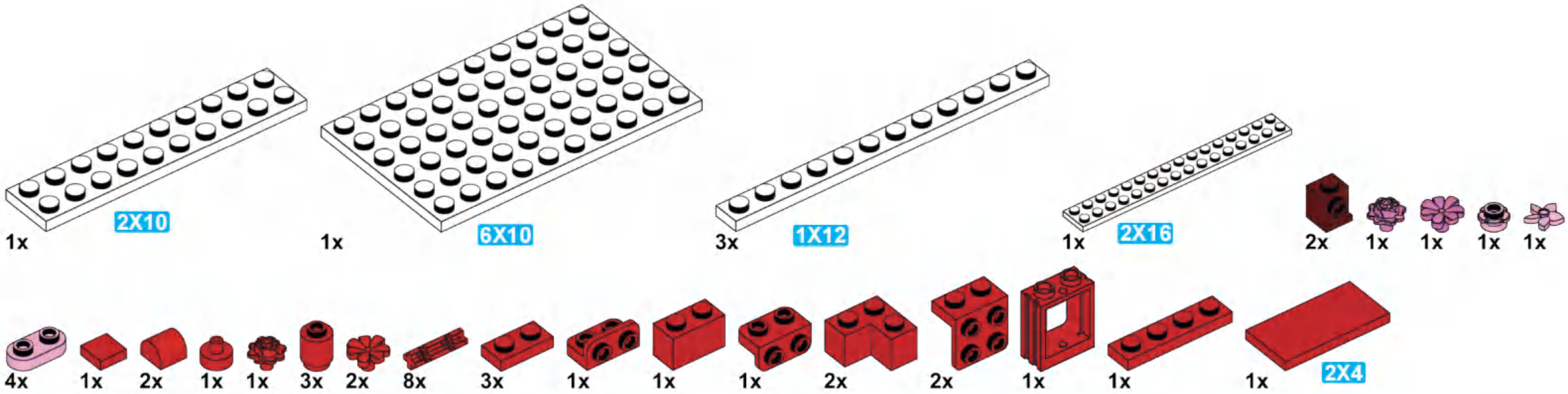
1x
2X10
1x
6X10
3x
1X12
1x
2X16
2x
1x
1x
1x
1x
4x
1x
2x
1x
1x
3x
2x
8x
3x
1x
1x
1x
2x
2x
1x
1x
1x
2X4

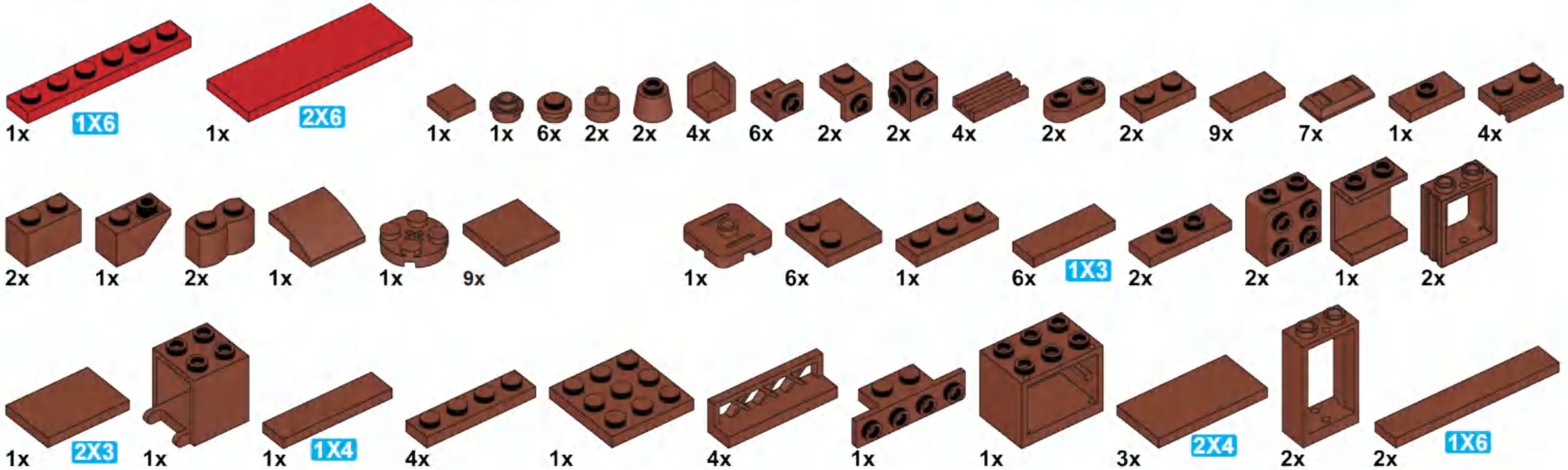
1x
1X6
1x
2X6
1x
1x
6x
2x
2x
4x
6x
2x
2x
4x
2x
2x
9x
7x
1x
4x
2x
1x
2x
1x
1x
9x
1x
6x
1x
6x
1X3
2x
2x
1x
2x
1x
2X3
1x
1x
1X4
4x
1x
4x
1x
1x
3x
2X4
2x
2x
1X6

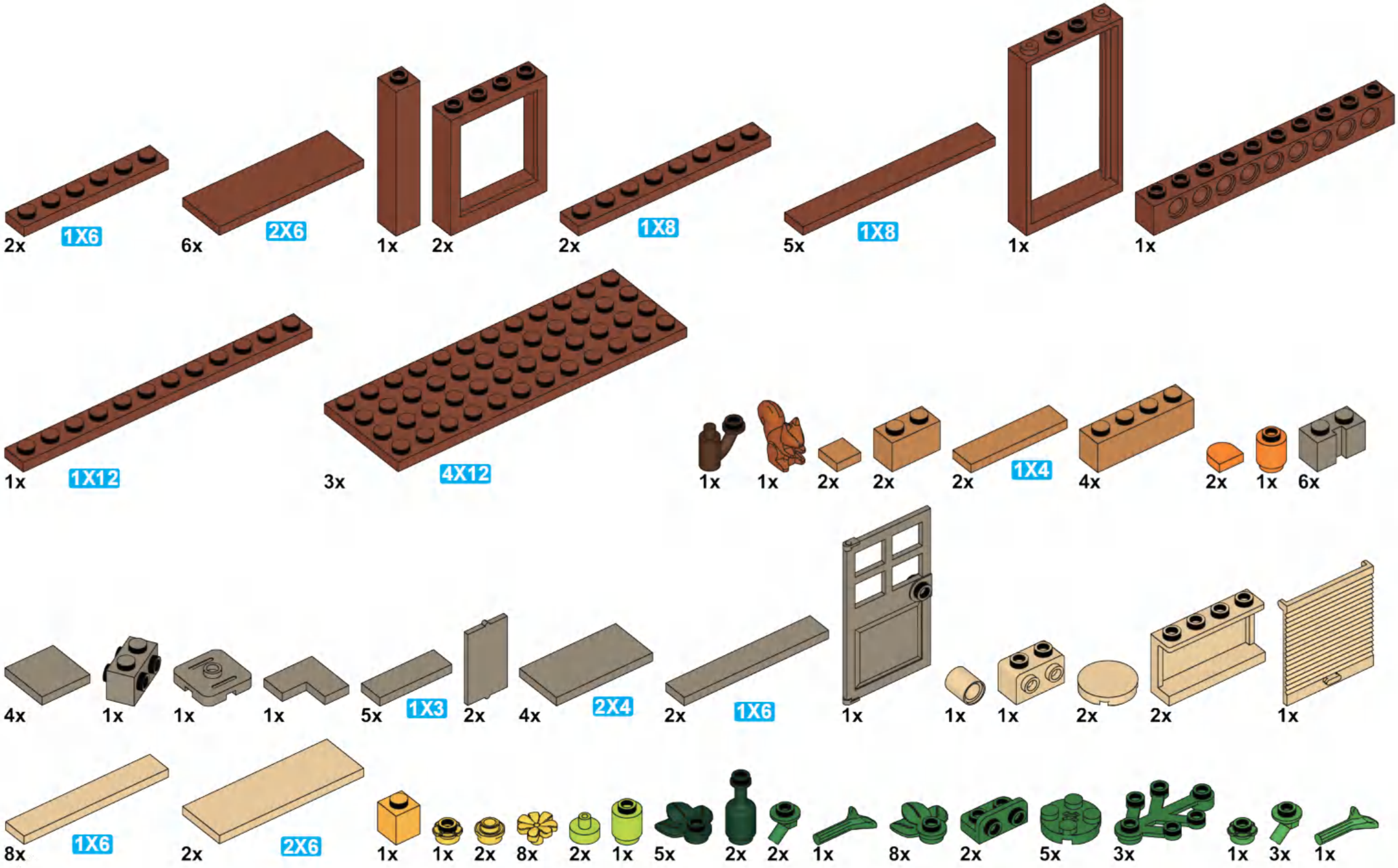
2x 1X6
6x 2X6
1x
2x
2x 1X8
5x 1X8
1x
1x
1x 1X12
3x 4X12
1x
1x
2x
2x
2x 1X4
4x
2x
1x
6x
4x
1x
1x
1x
5x 1X3
2x
4x 2X4
2x 1X6
1x
1x
1x
2x
2x
1x
8x 1X6
2x 2X6
1x
1x
2x
8x
2x
1x
5x
2x
2x
1x
8x
2x
5x
3x
1x
3x
1x

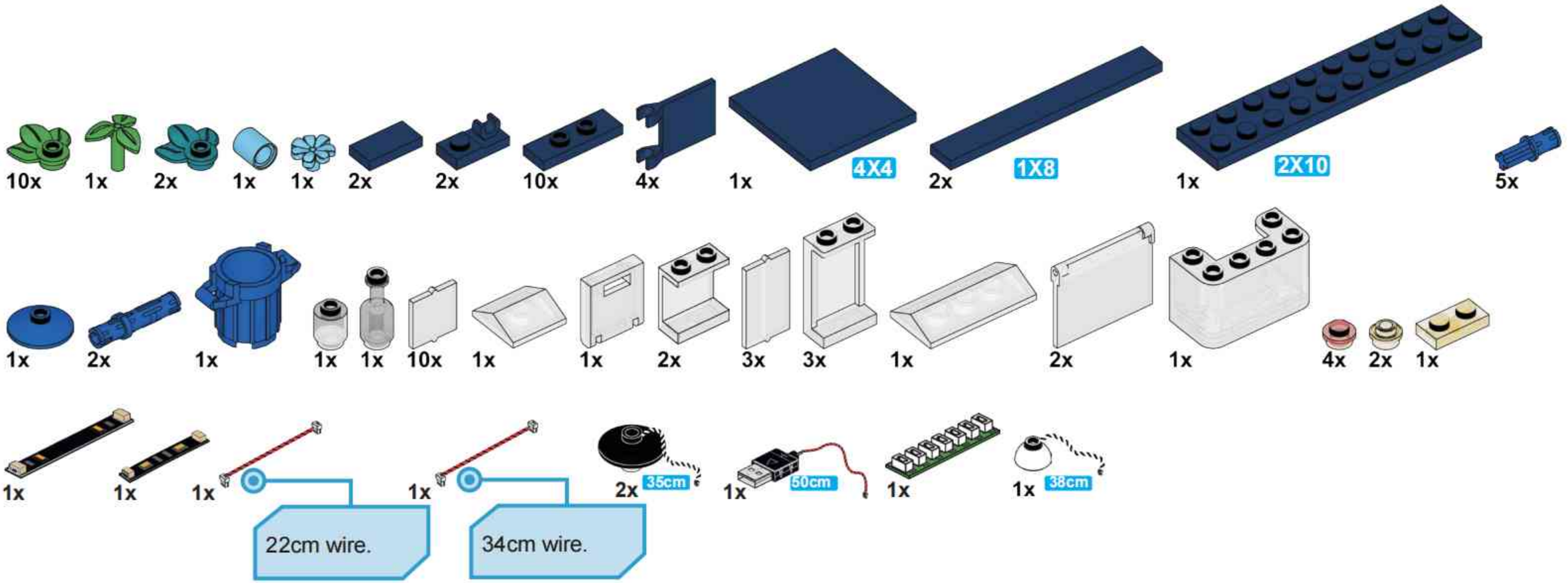
10x
1x
2x
1x
1x
2x
2x
10x
4x
1x
4X4
2x
1X8
1x
2X10
5x
1x
2x
1x
1x
1x
10x
1x
1x
2x
3x
3x
1x
2x
1x
4x
2x
1x
1x
1x
1x
1x
22cm wire.
1x
2x
35cm
1x
50cm
1x
1x
38cm
34cm wire.

Reobrix

NO.66501

RAMEN