Reobrix

NO.55012

THE CLOCK TOWER

PHYSICAL PRODUCT
SIZE UP TO

139cm

Located in
London, UK

One of the world's
famous Gothic buildings

The prototype was built
during the reign of Edward
I from 1288 to 1290

A2

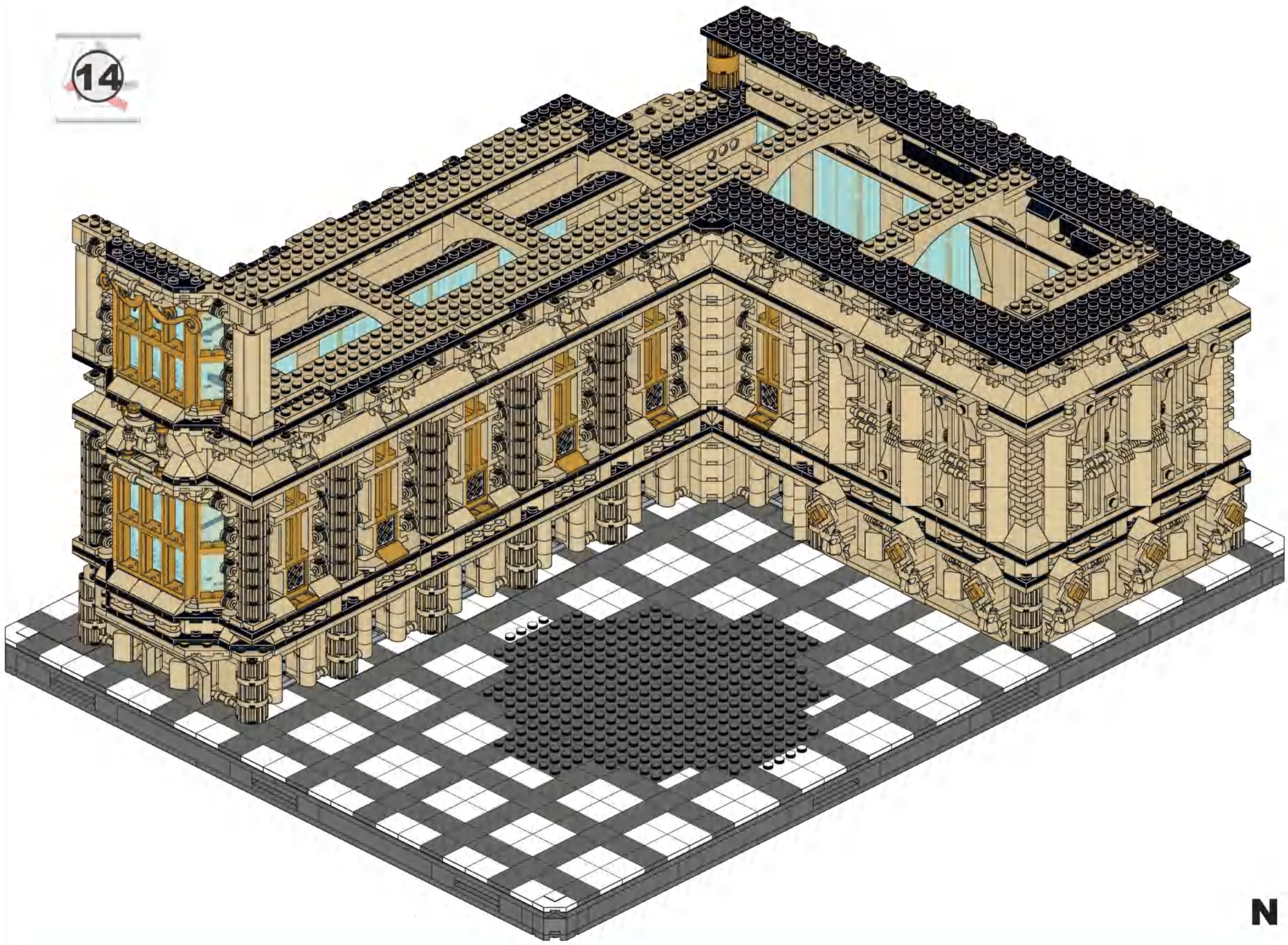
14
N

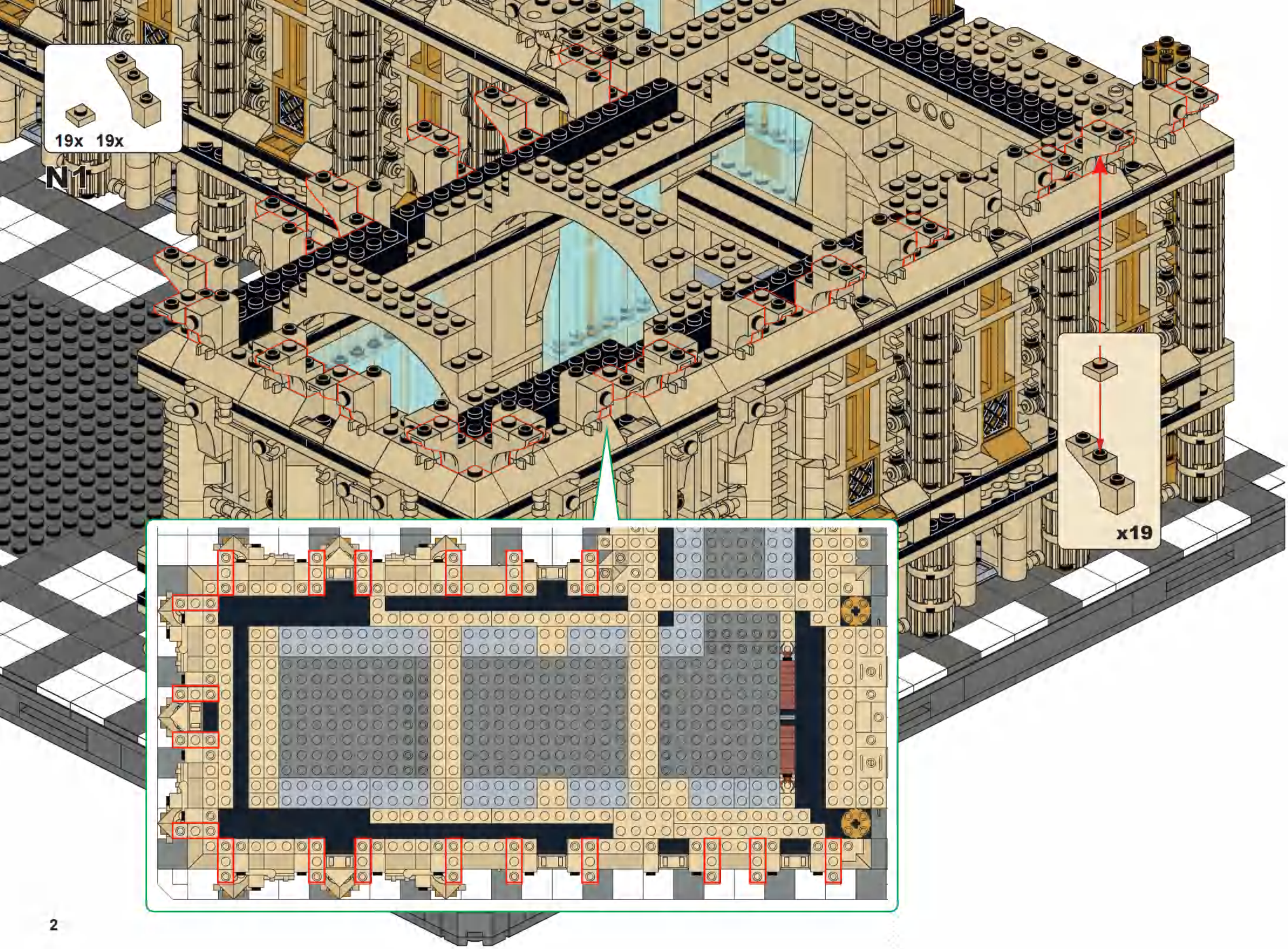
19x 19x
N1
x19

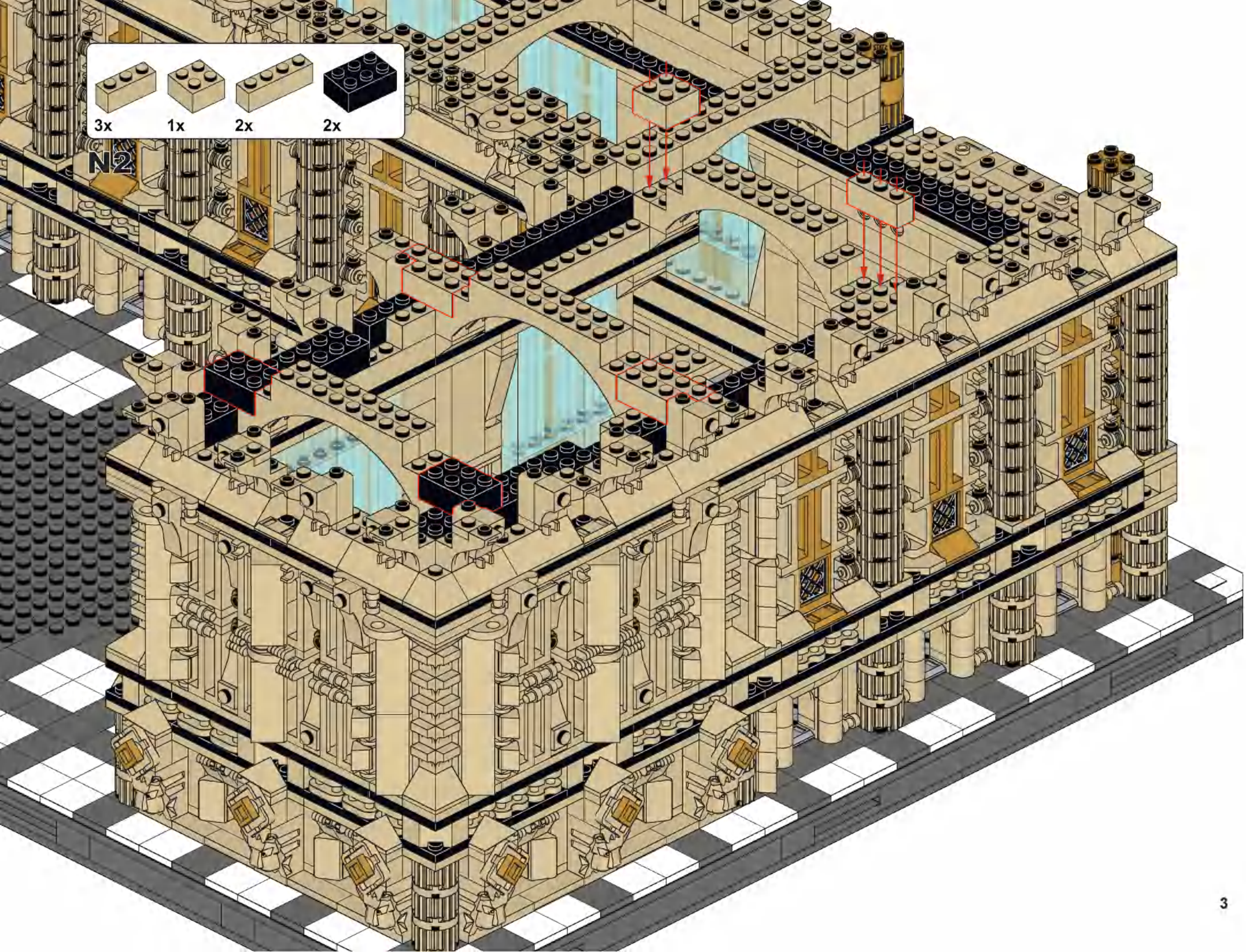
3x
1x
2x
2x
N2

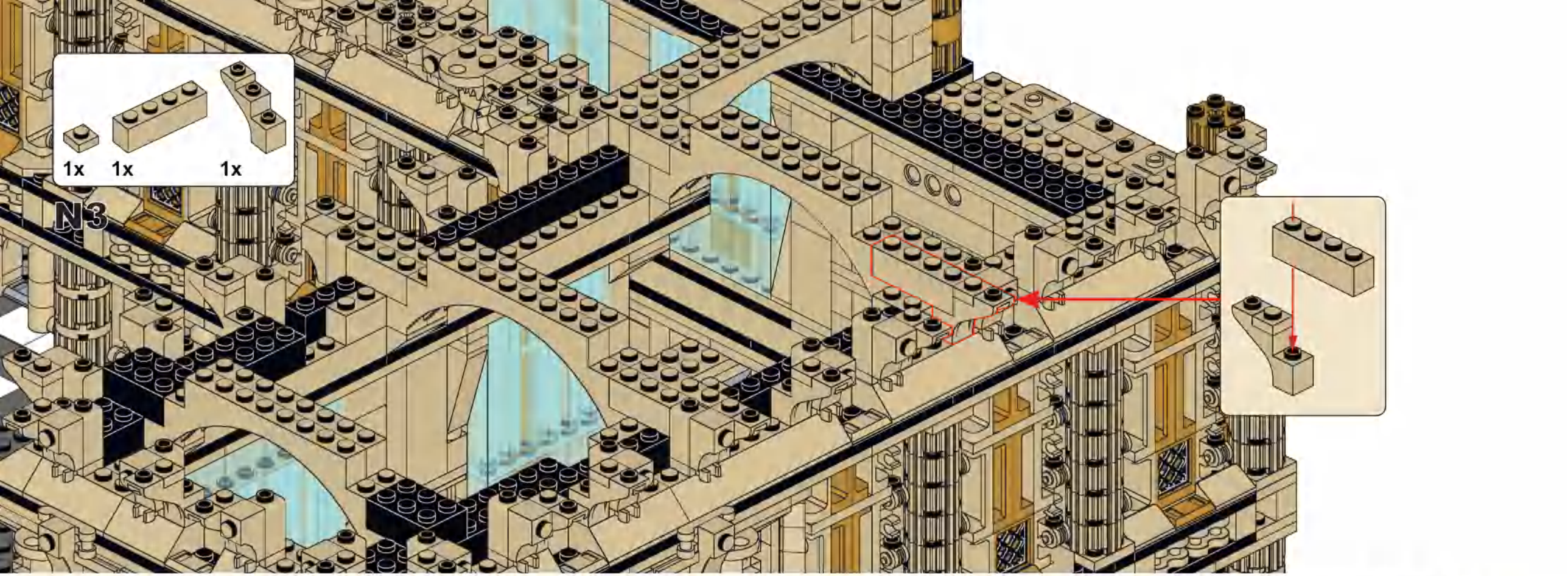
1x
1x
1x
N3

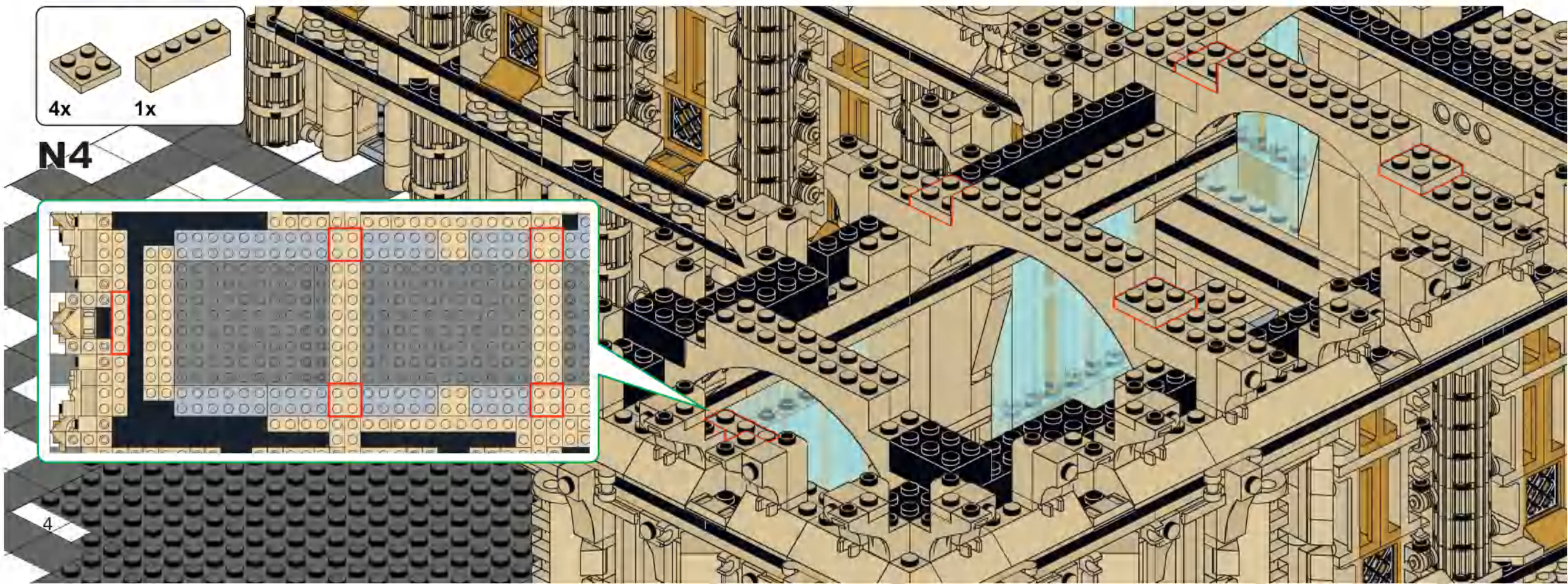
4x
1x
N4

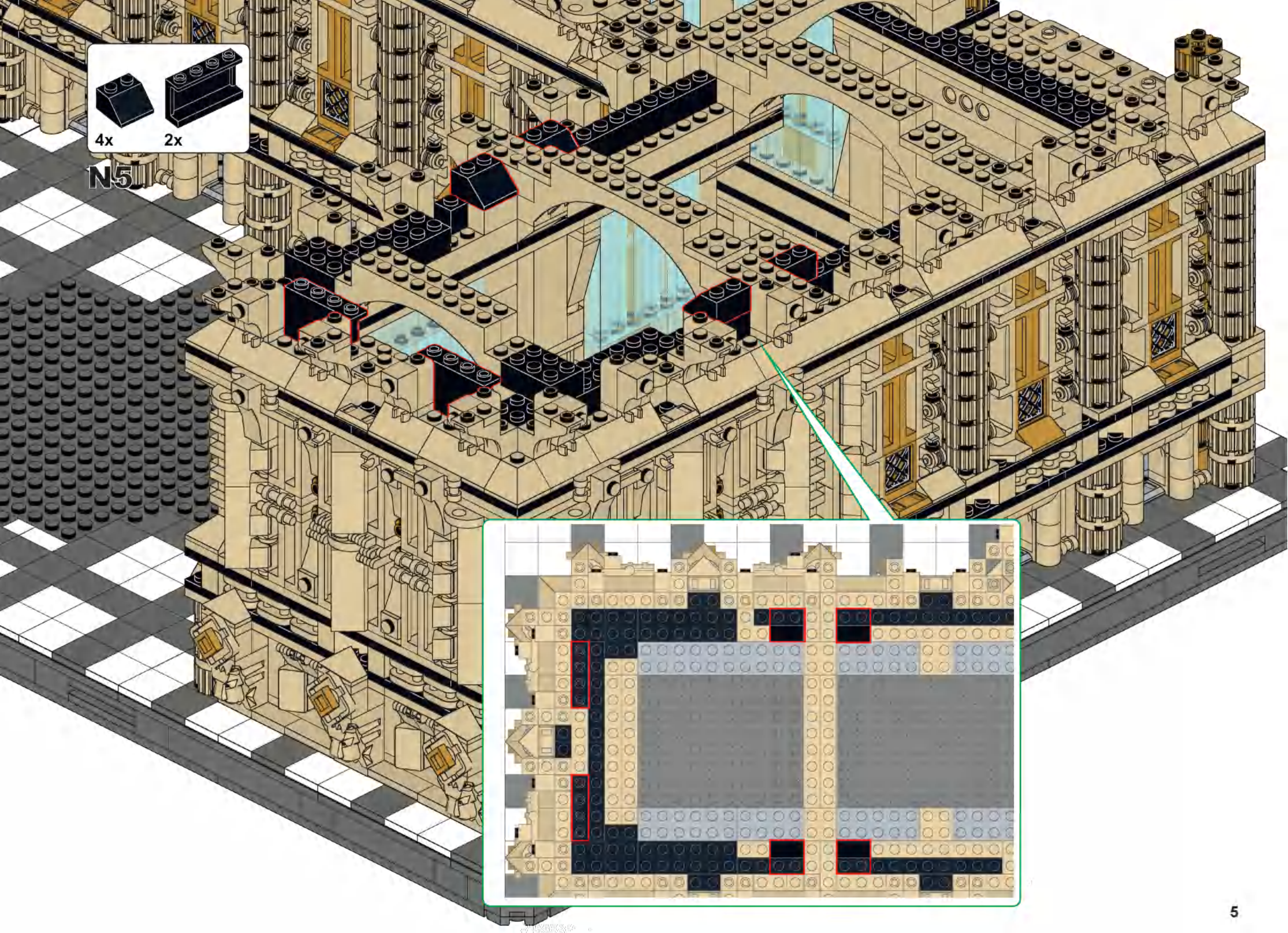
4x
2x
N5

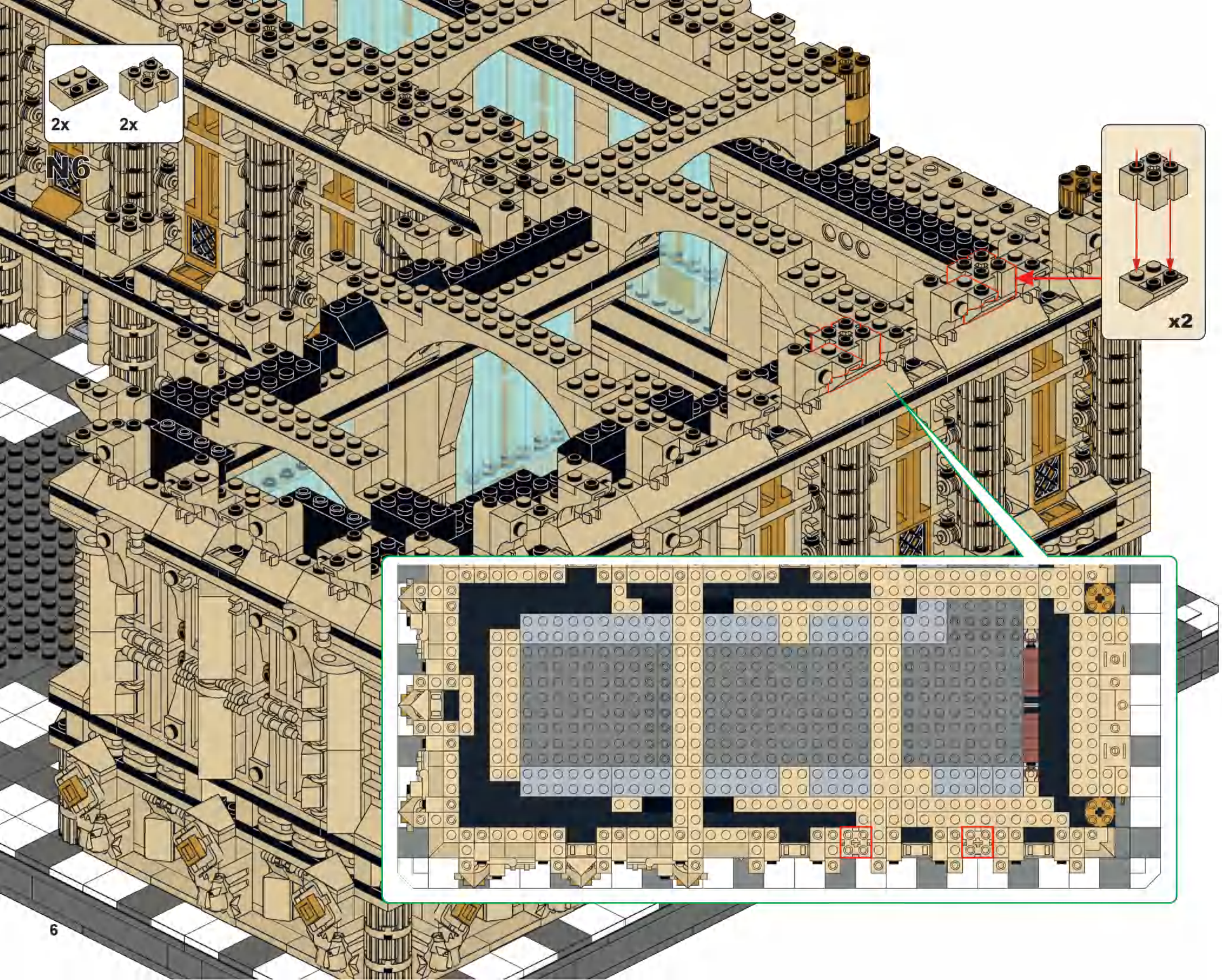
2x
2x
N6
x2

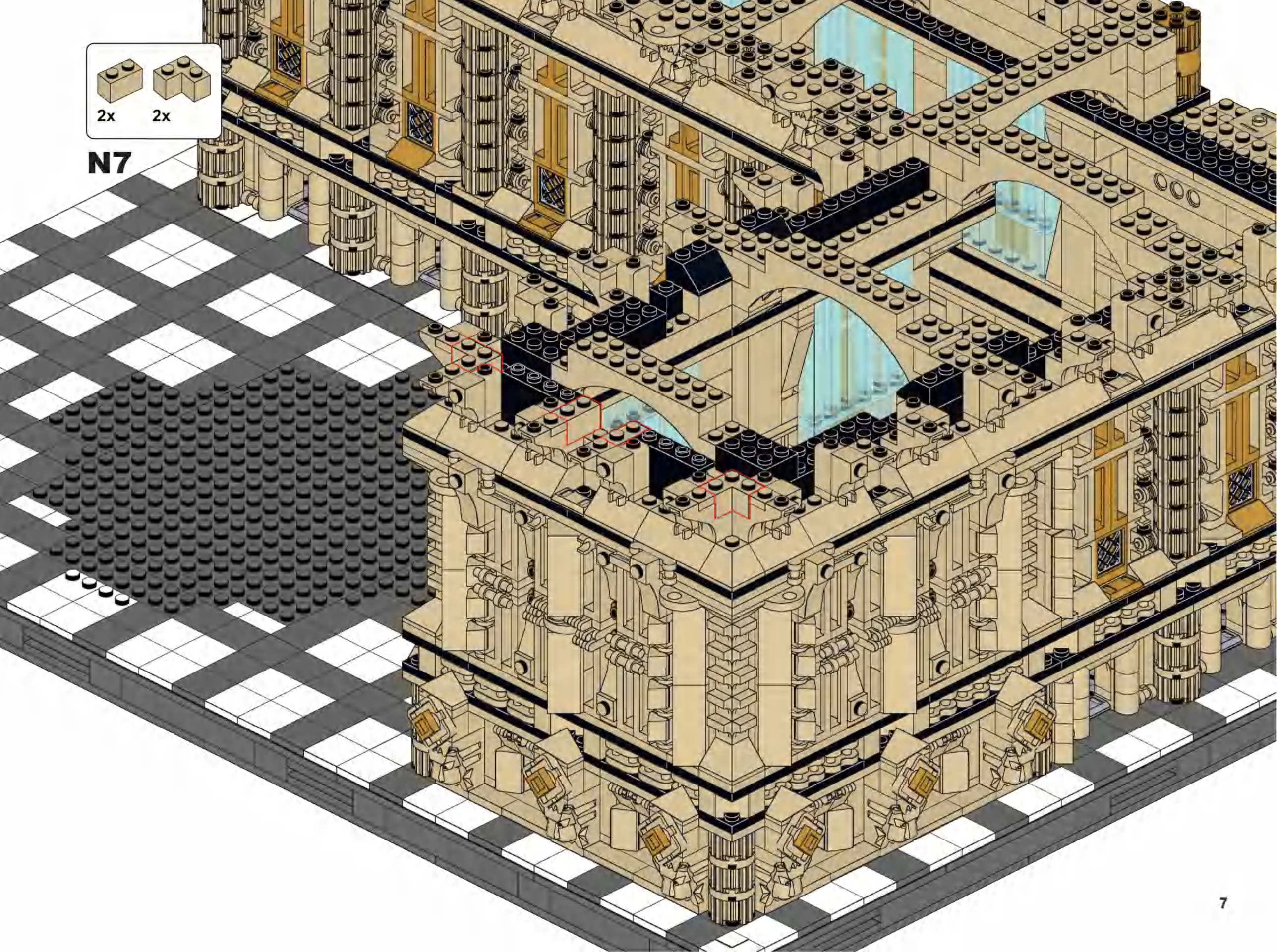
2x
2x
N7

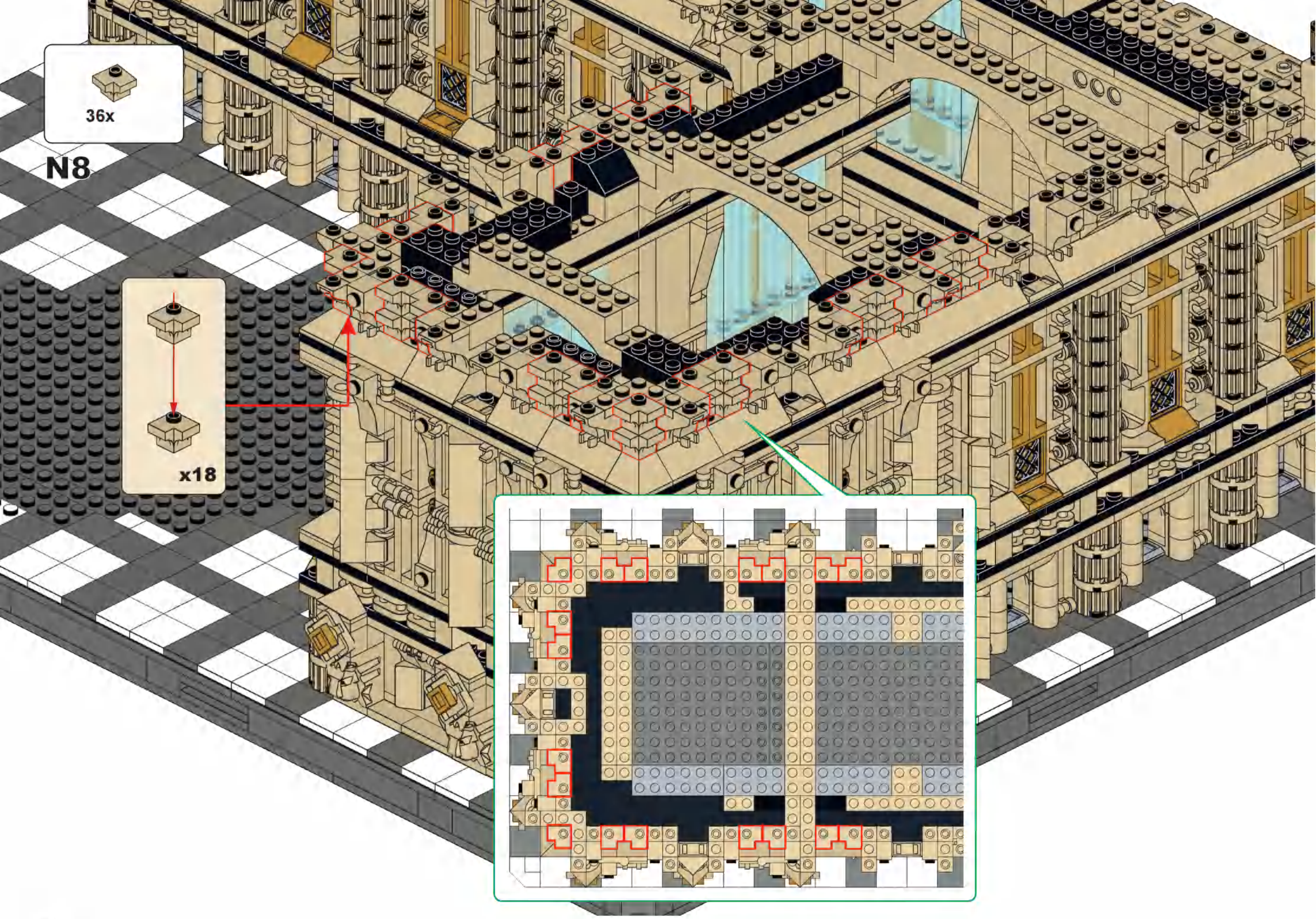
36x
N8
x18

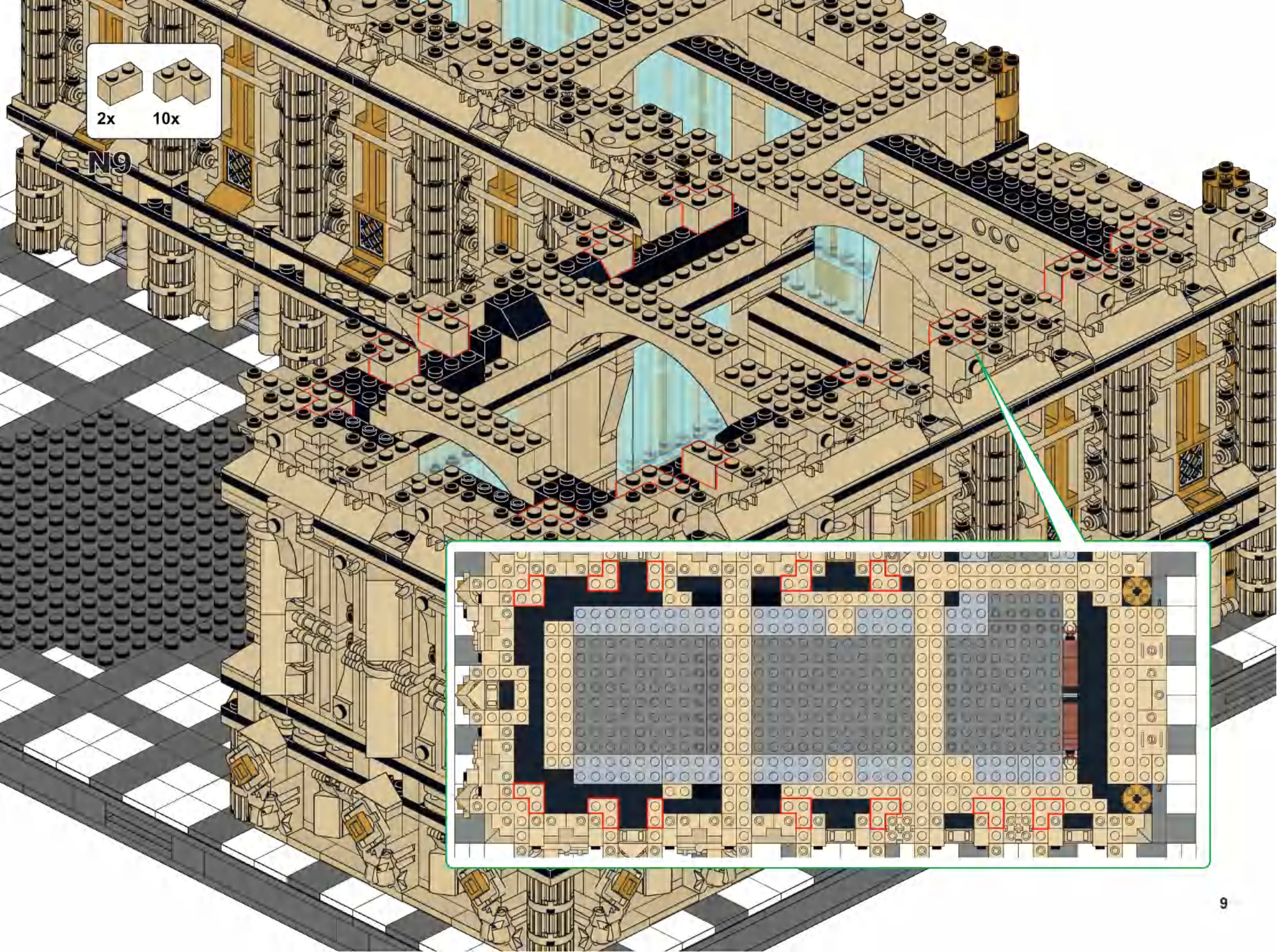
2x
10x
N9

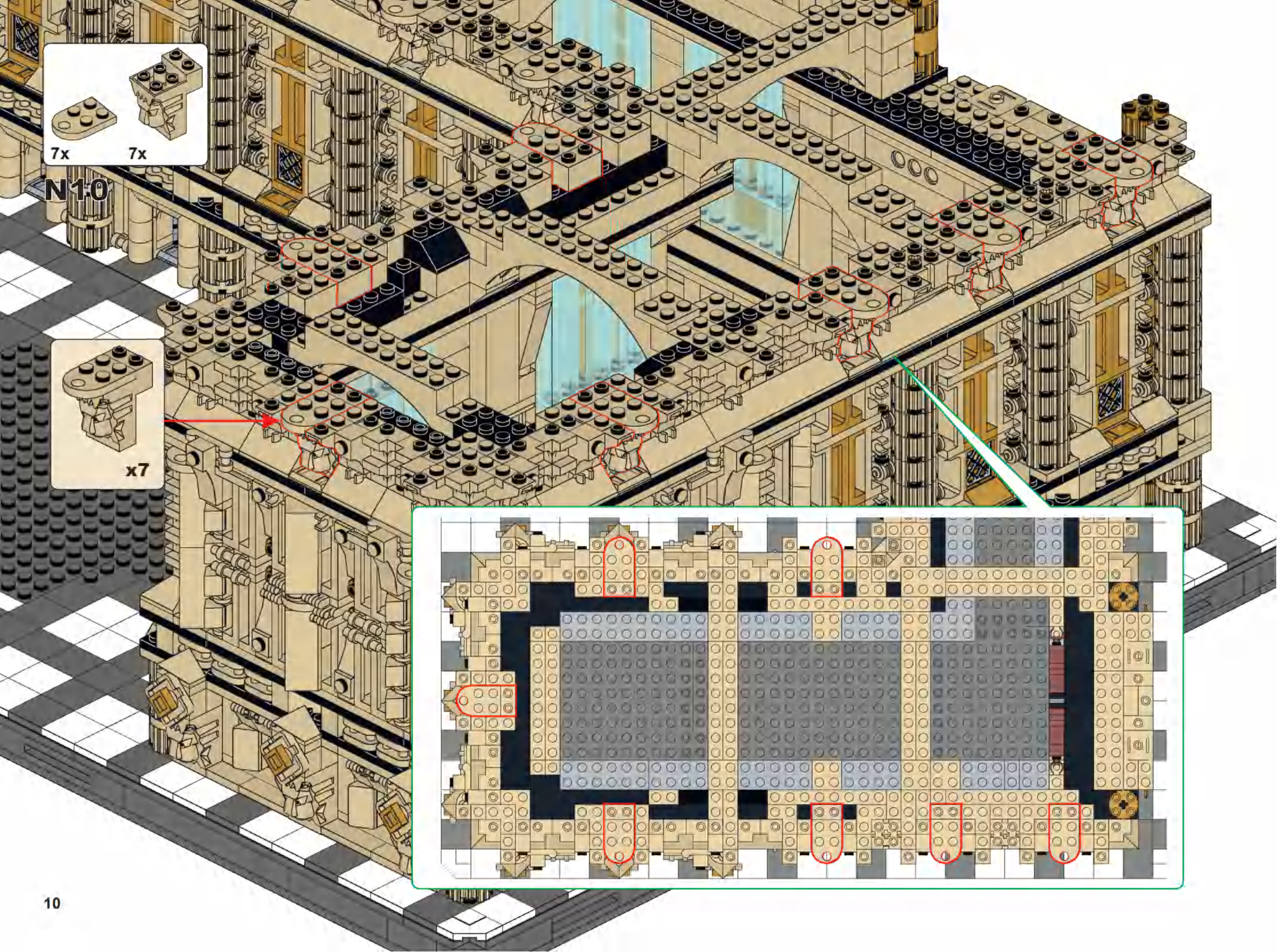
7x
7x
N 1.0
x7

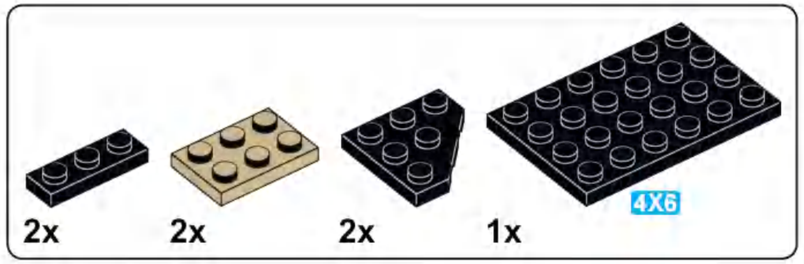

N11

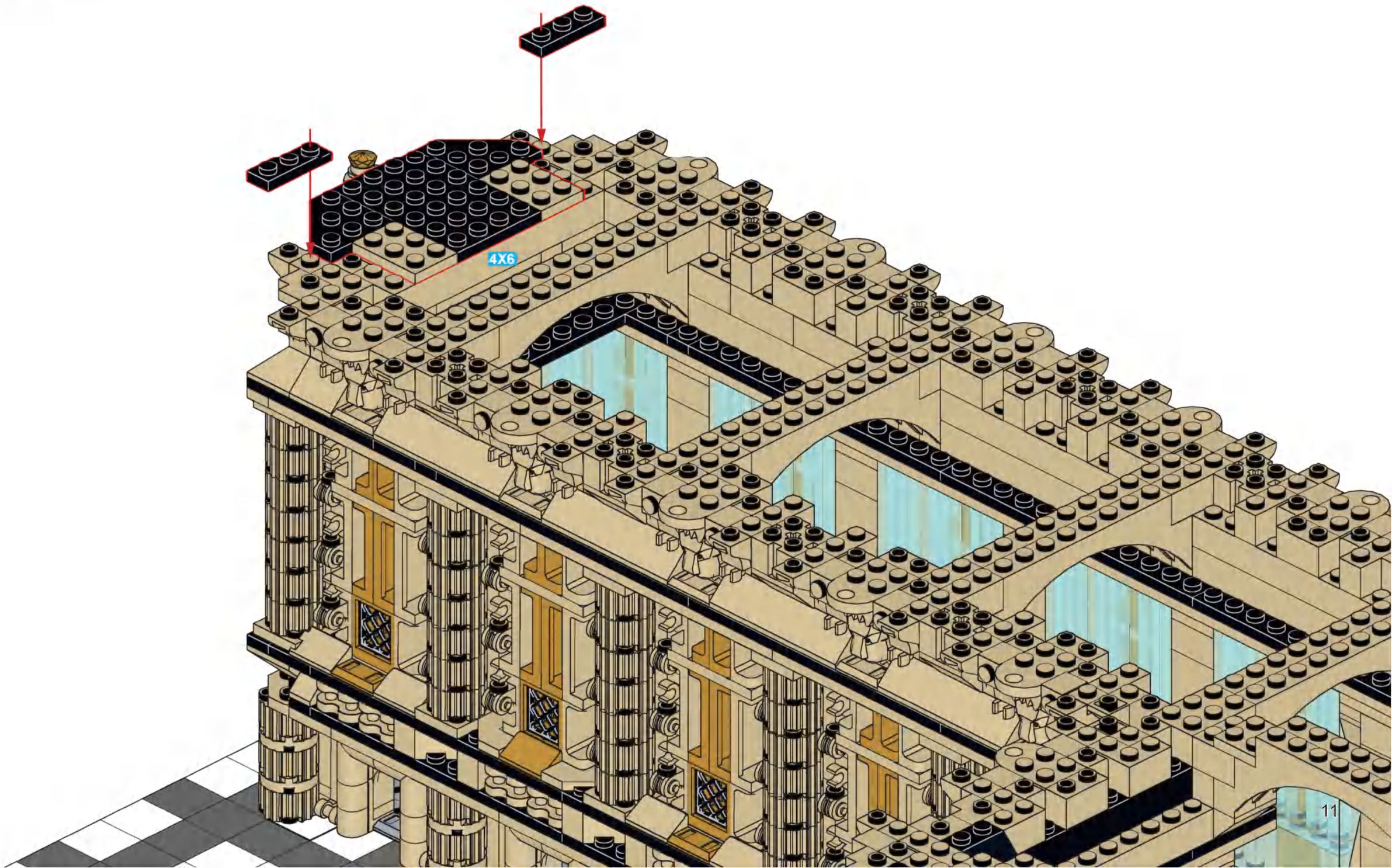

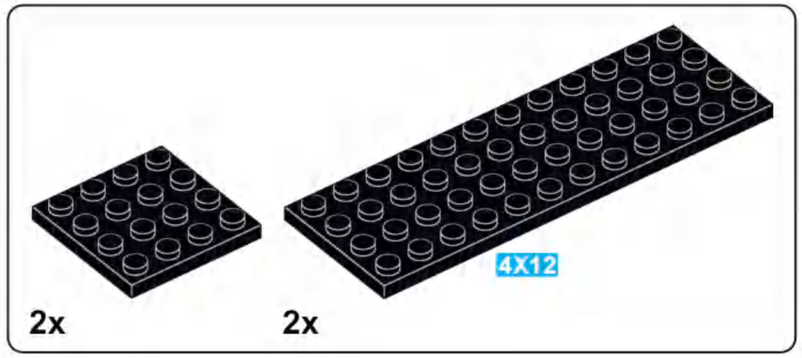

N12

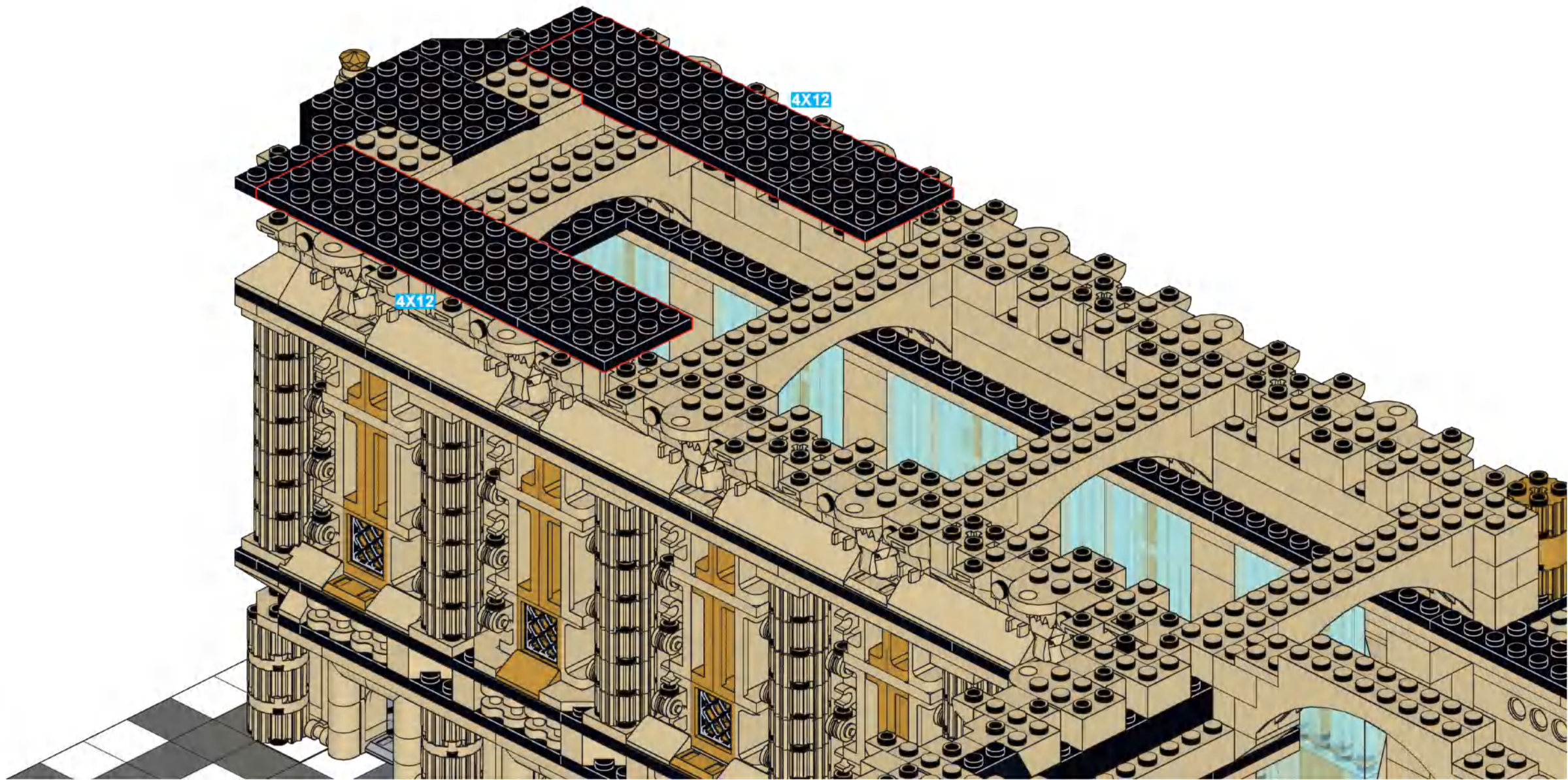

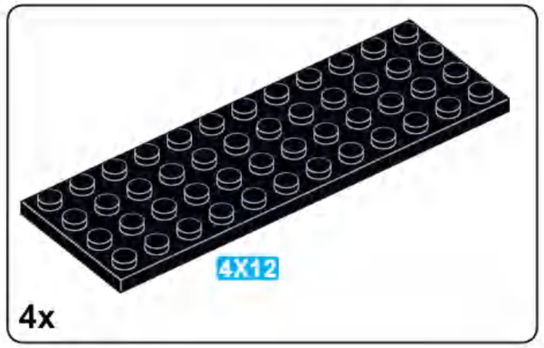

N13

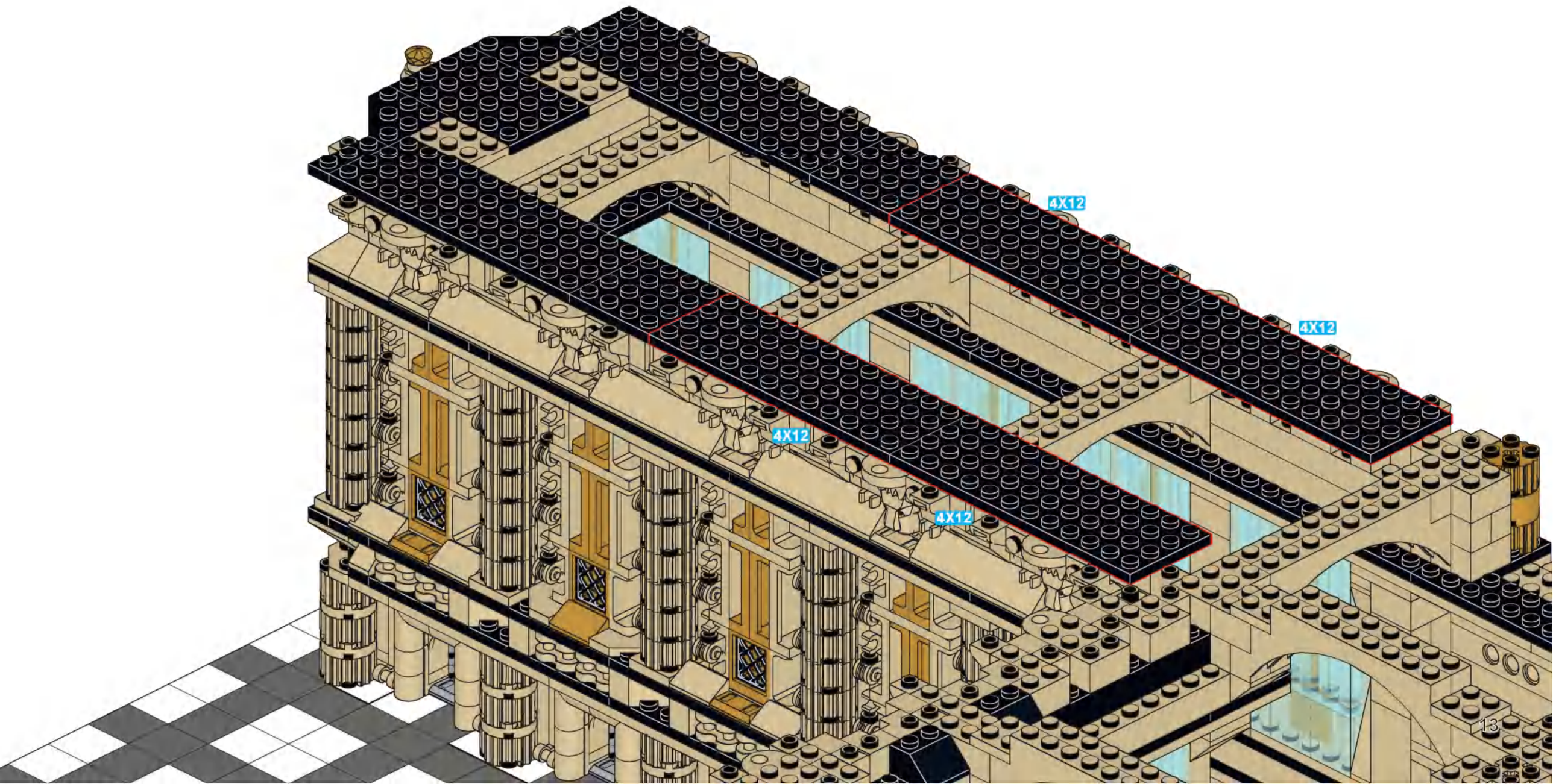

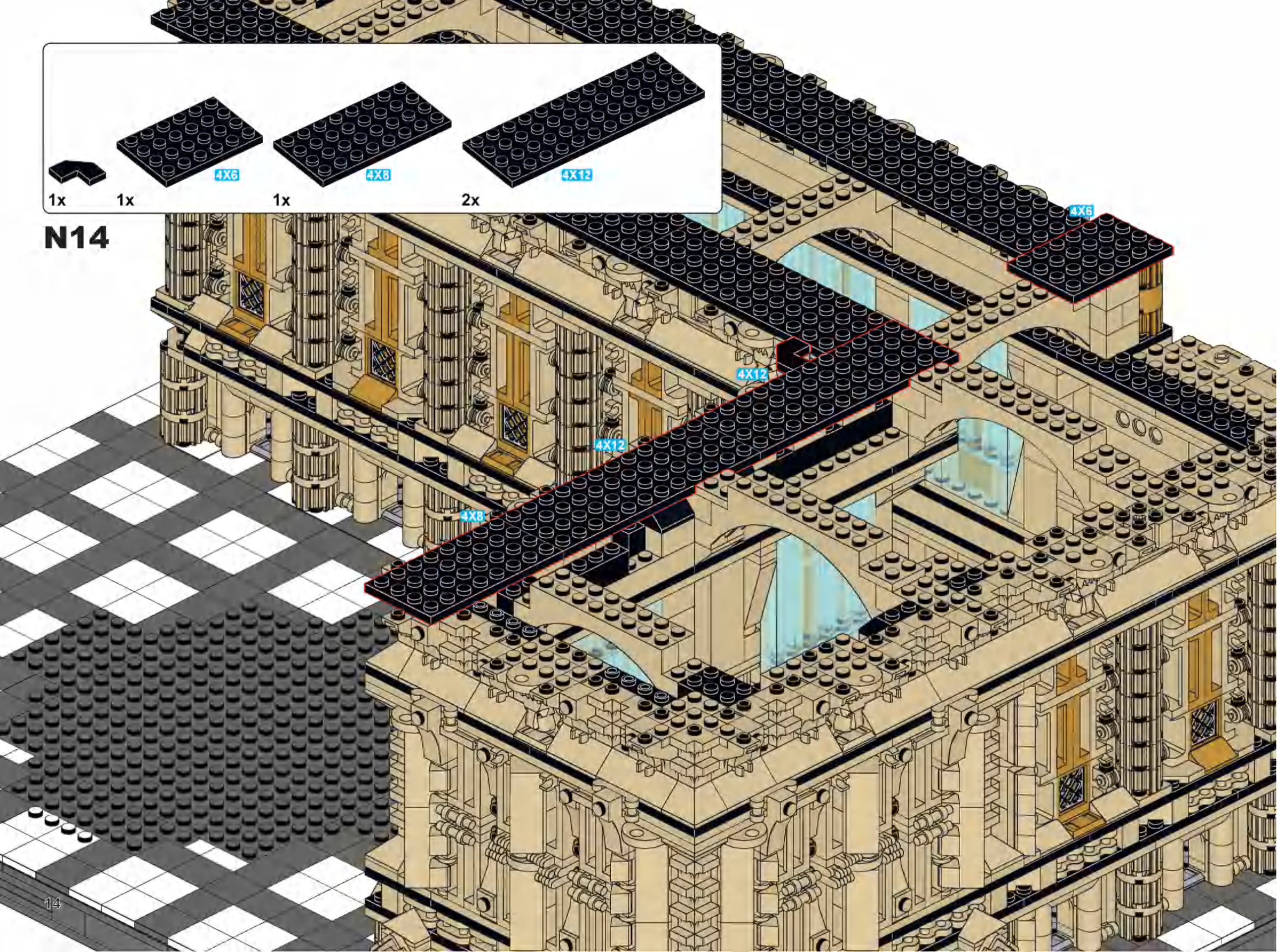
1x
1x
4X6
1x
4X8
2x
4X12
N14
4X6
4X12
4X12
4X8

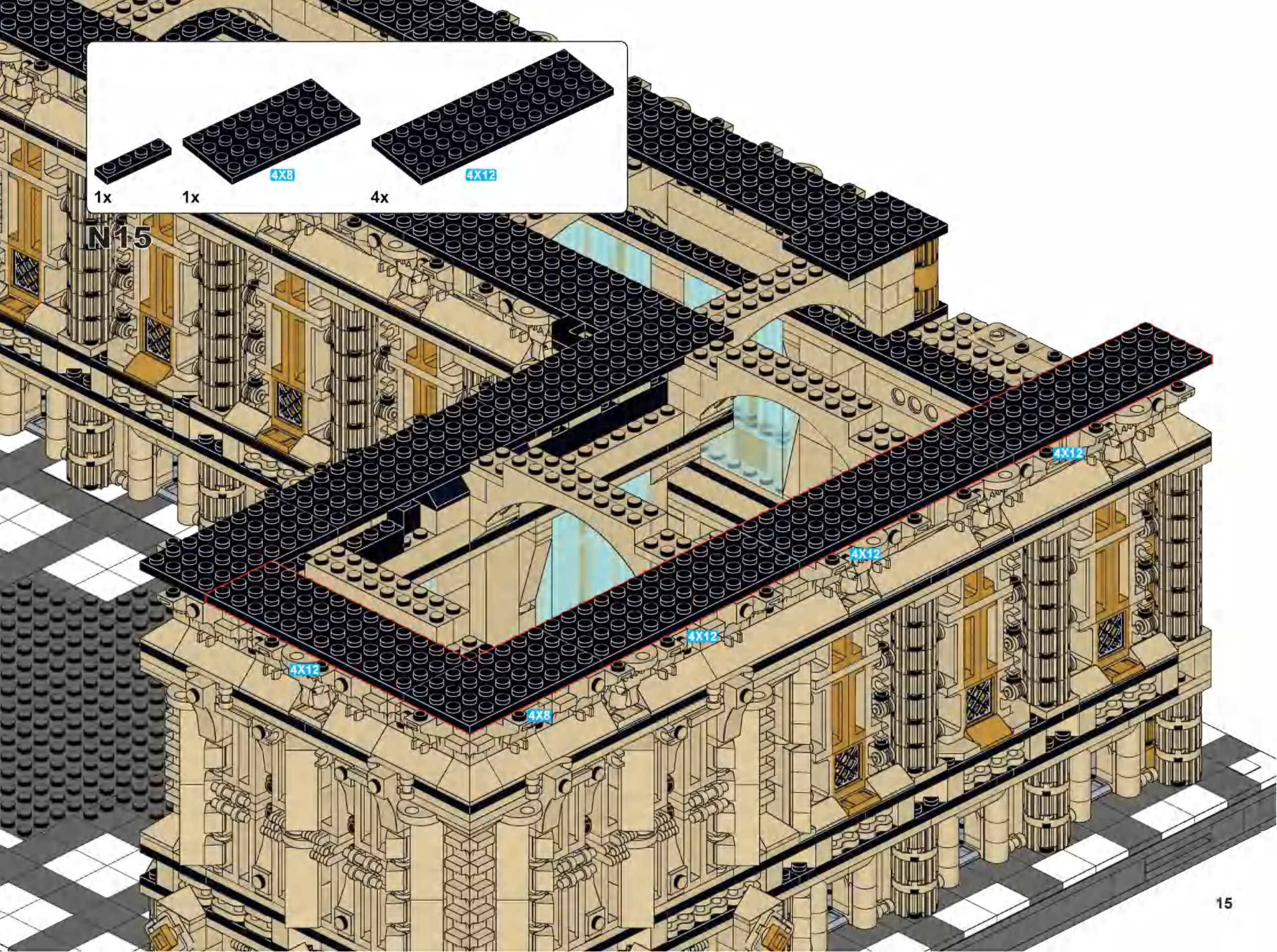
1x
1x
4X8
4x
4X12
N15
4X12
4X12
4X12
4X12
4X8

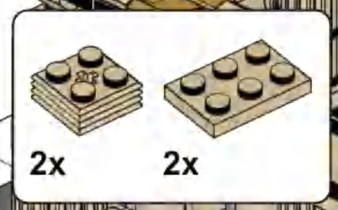

N16

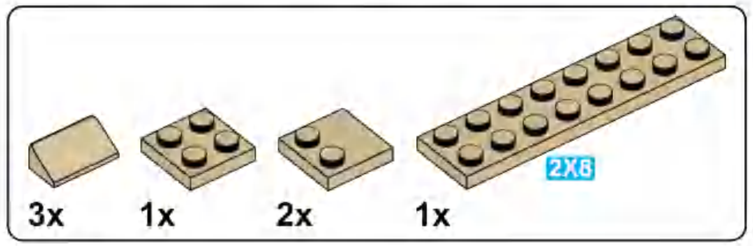

N17

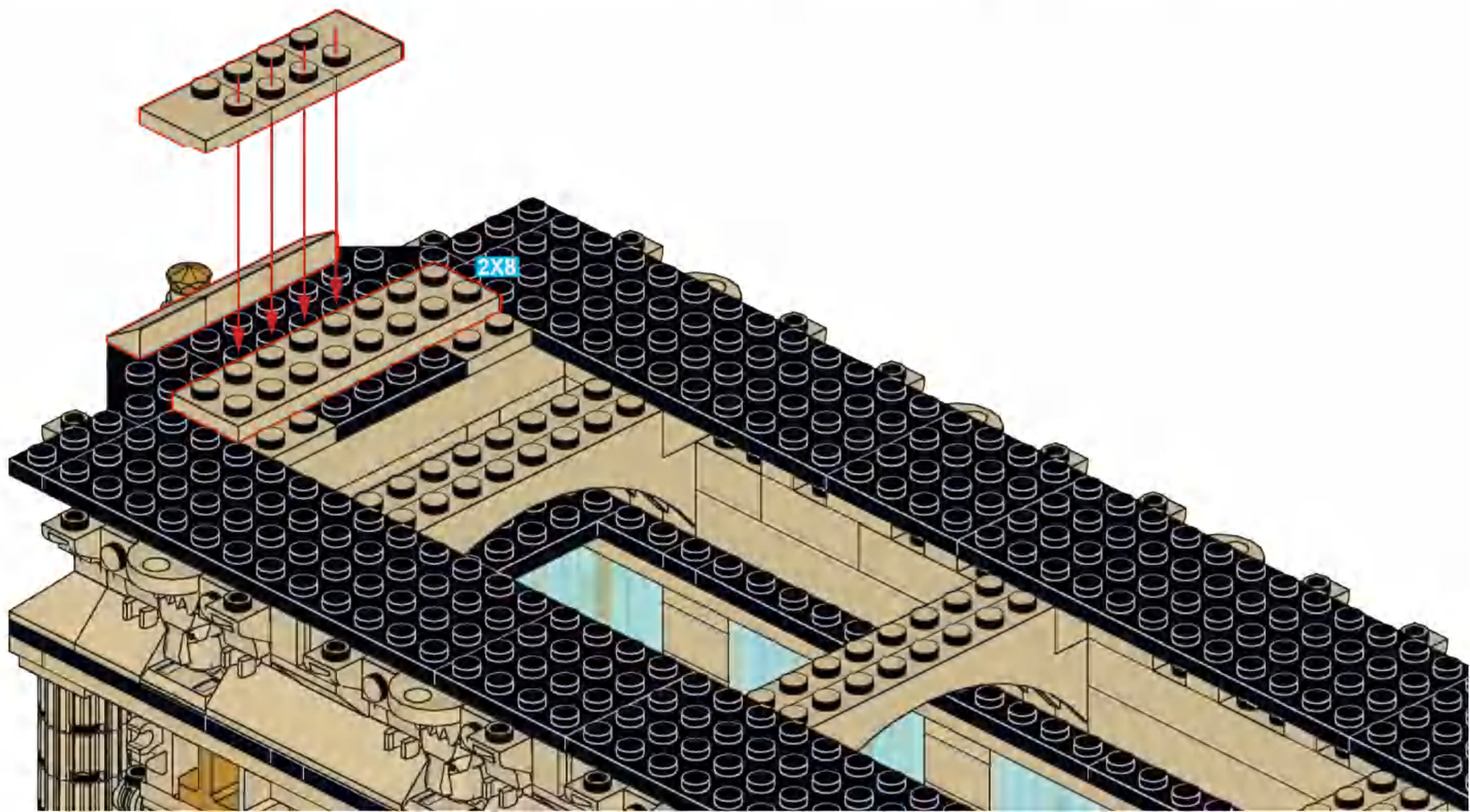

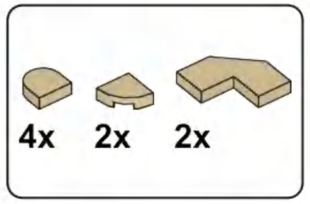

N18

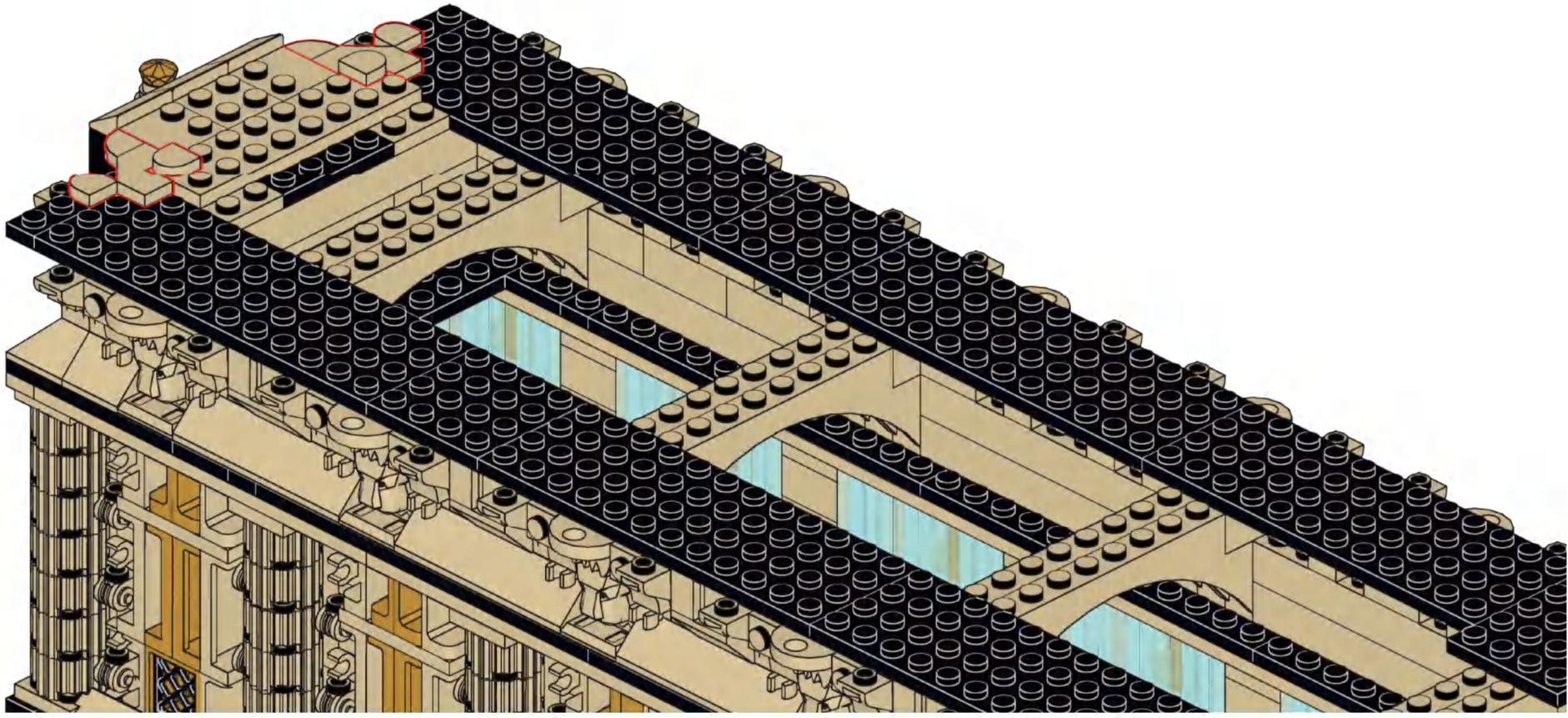

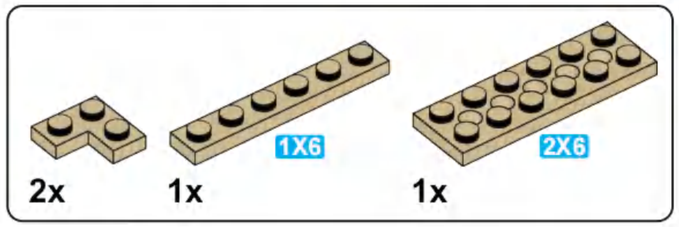

N19

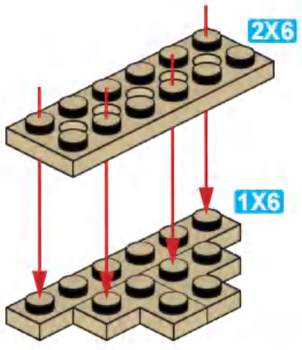

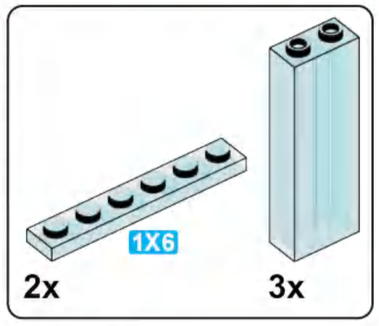

N20

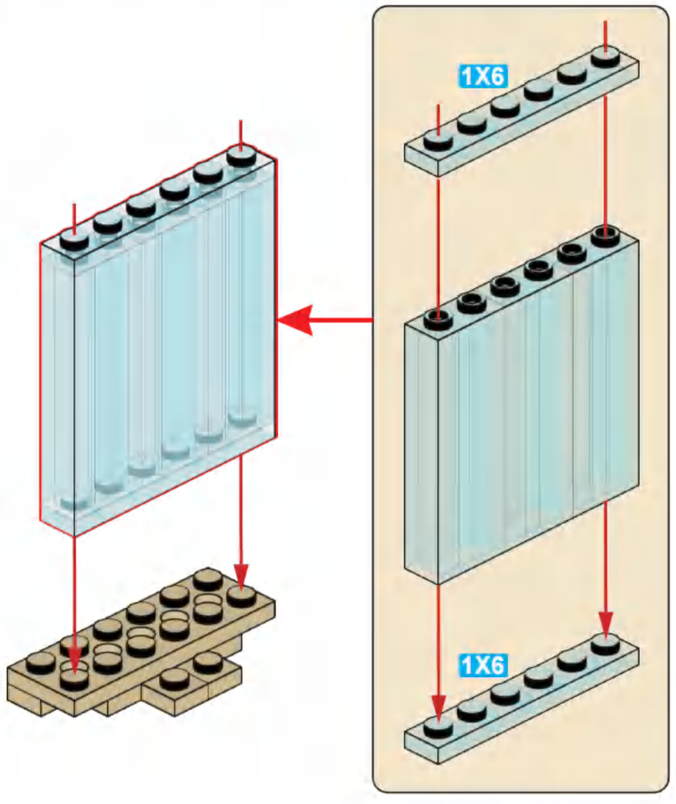

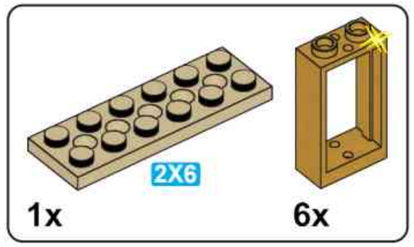

N21

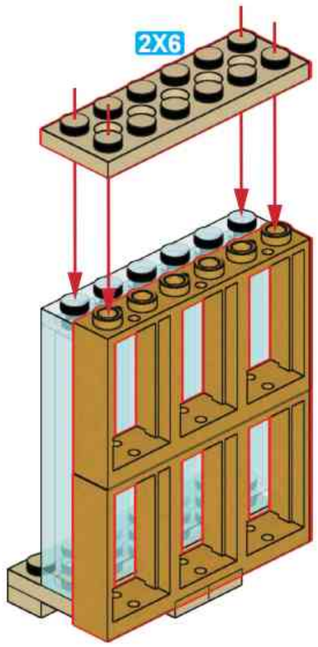

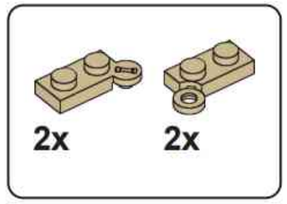

N22

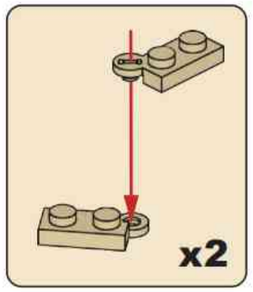

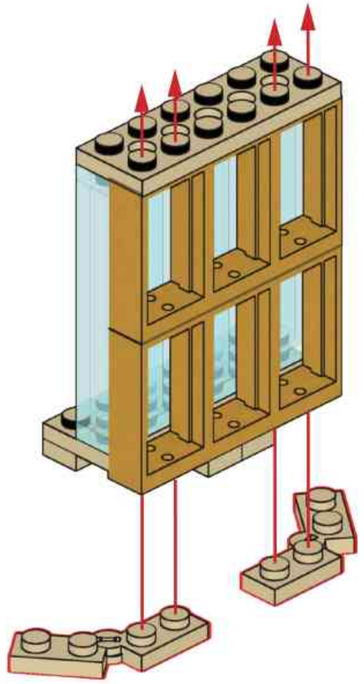

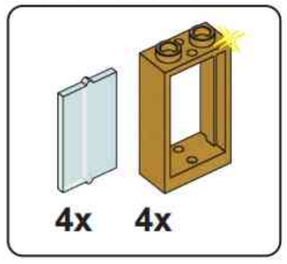

N23

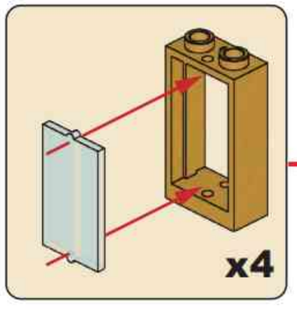

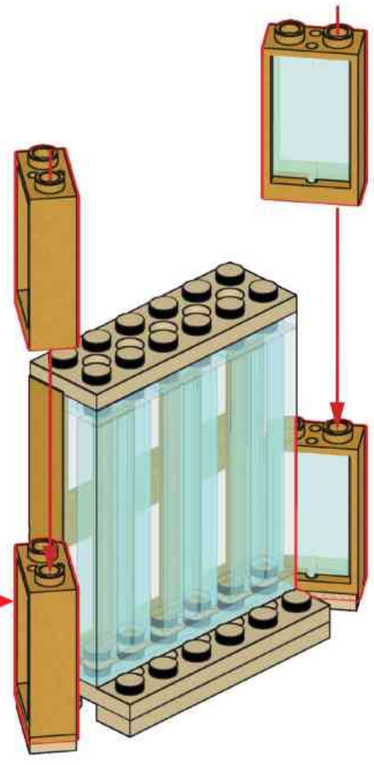

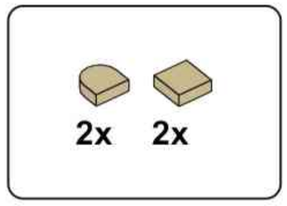

N24

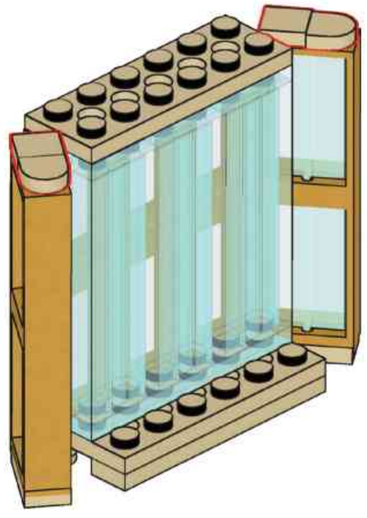

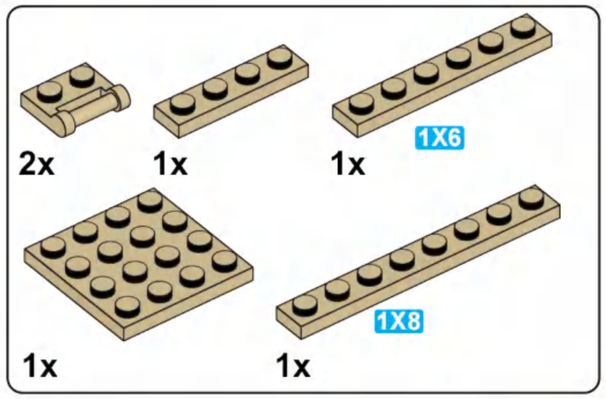

N25

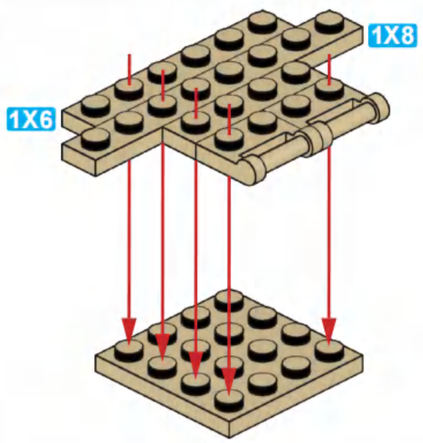

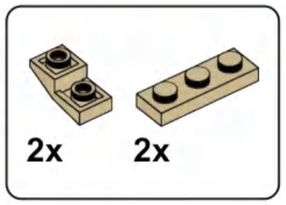

N26

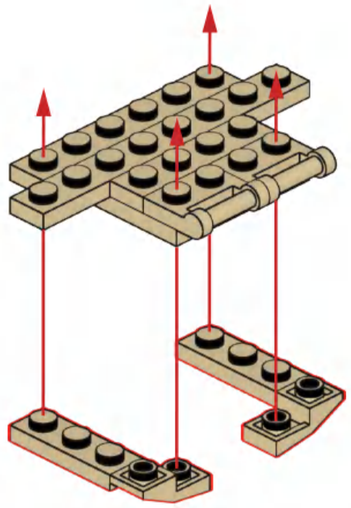

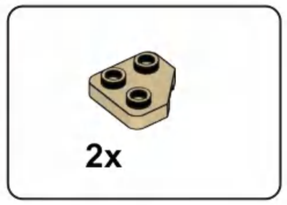

N27

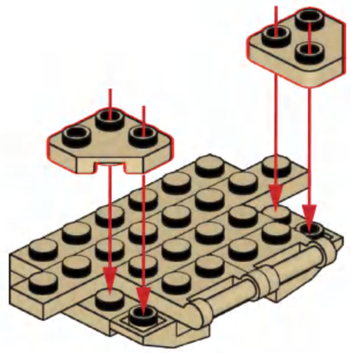

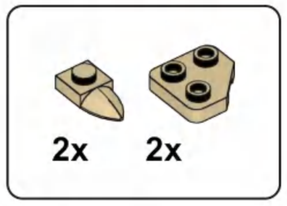

N28

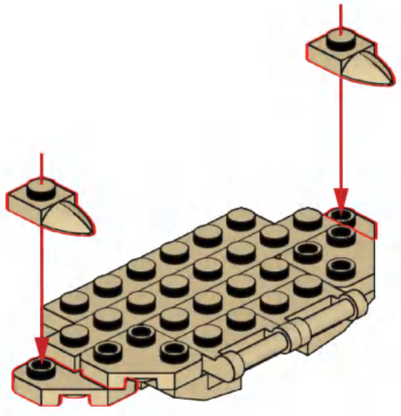

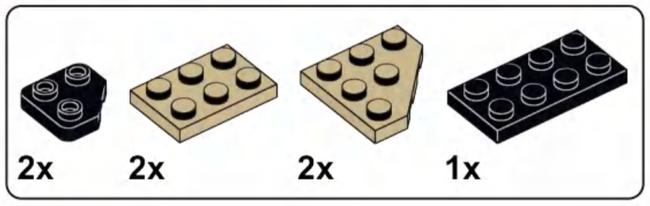

N29

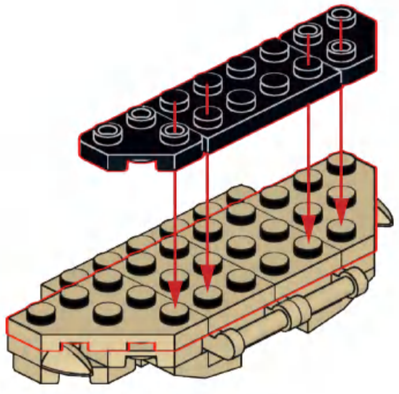

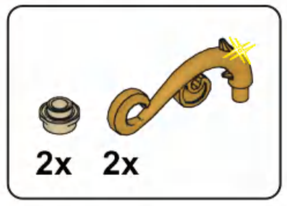

N30

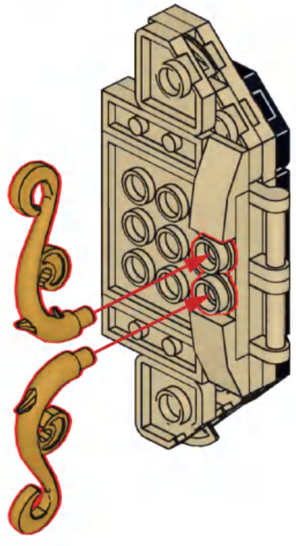

N31

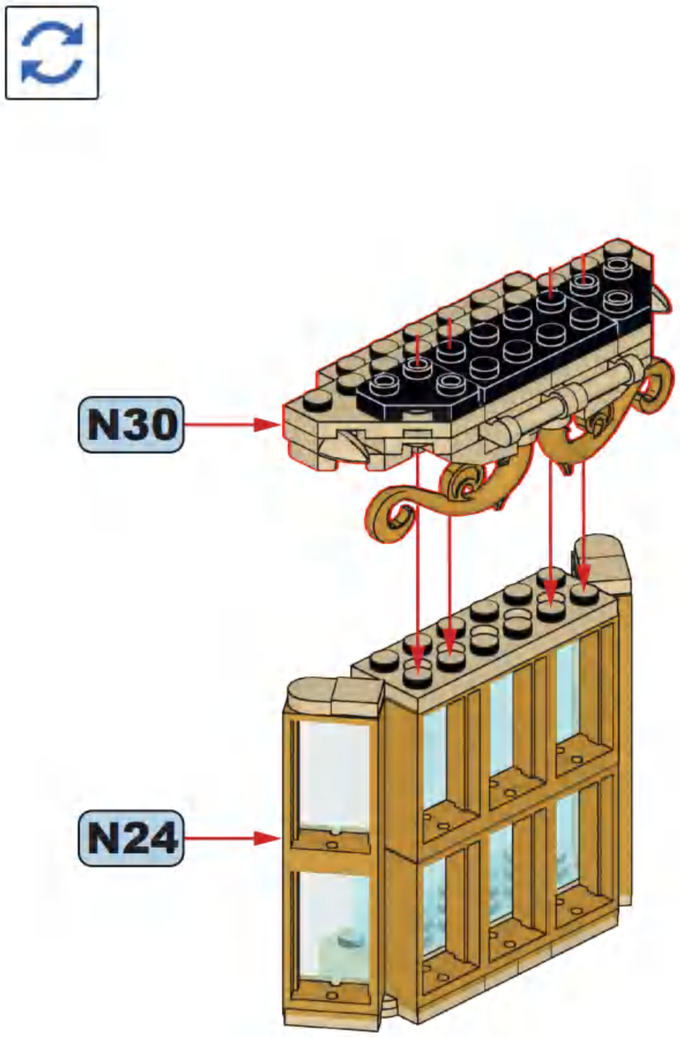

N32

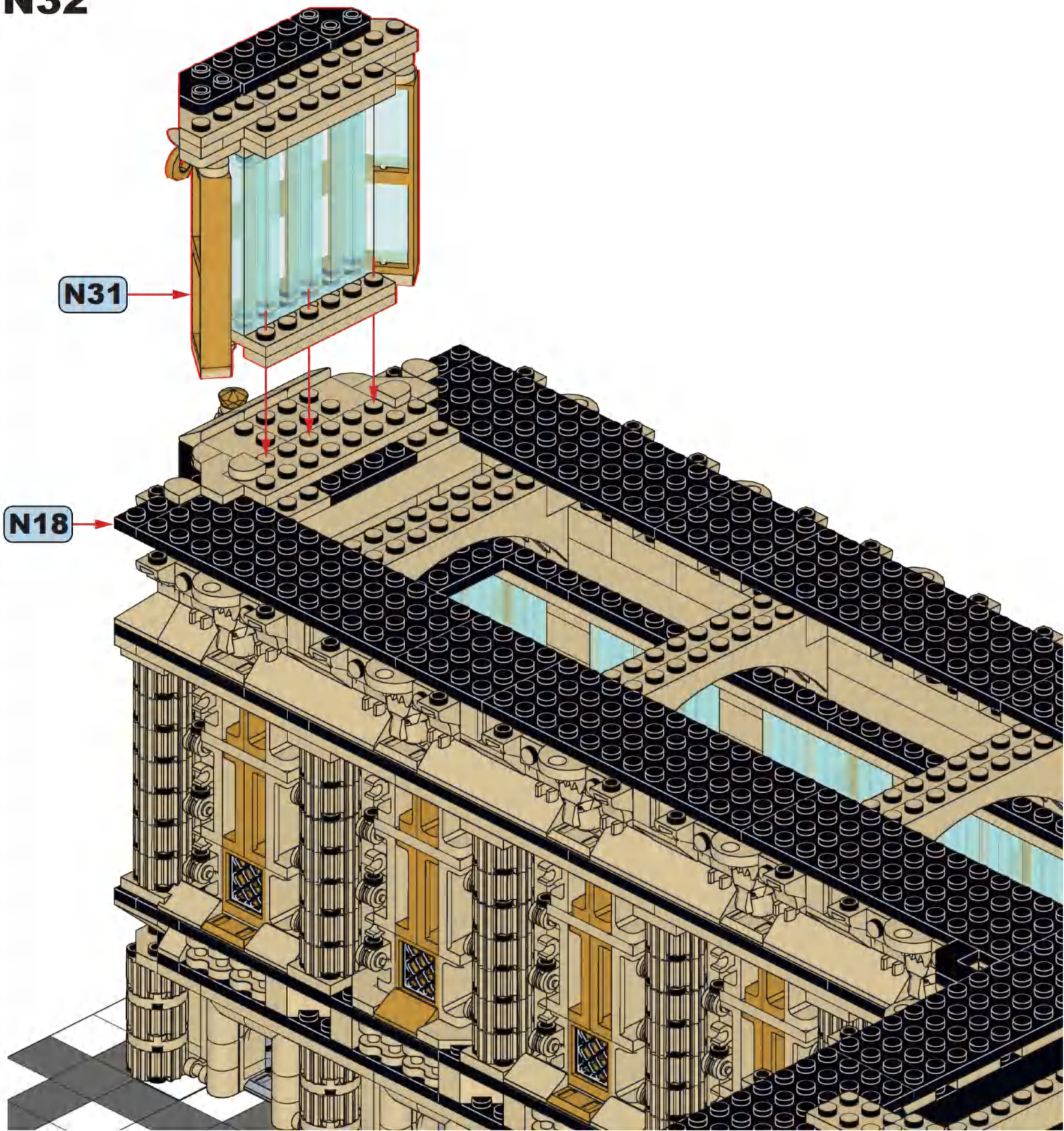

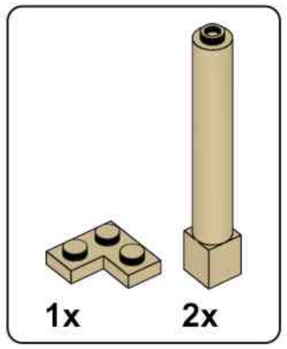

N33

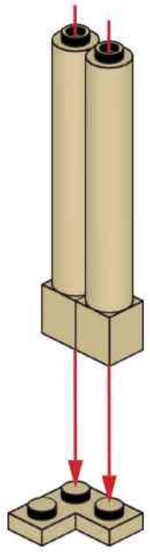

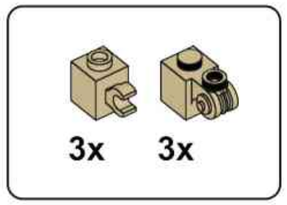

N34

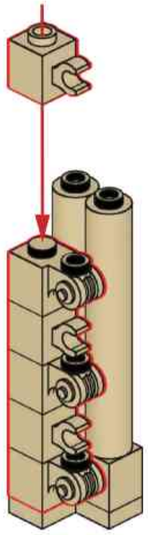

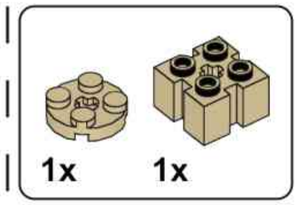

N35

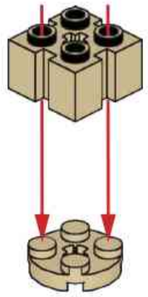

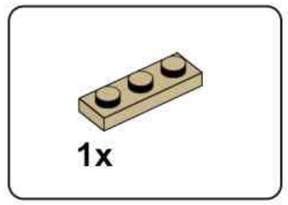

N36

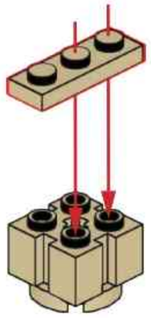

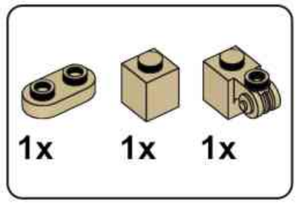

N37

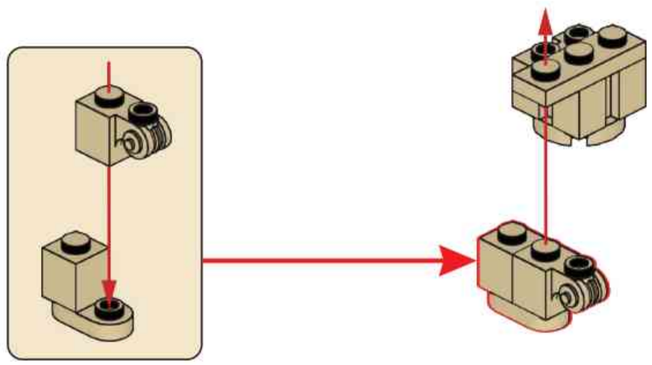

N38

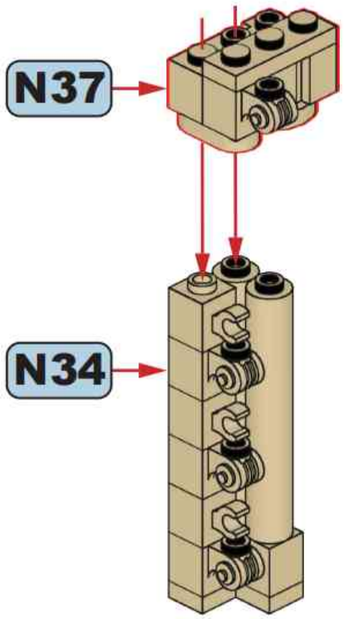

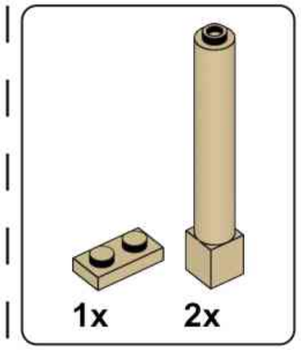

N39

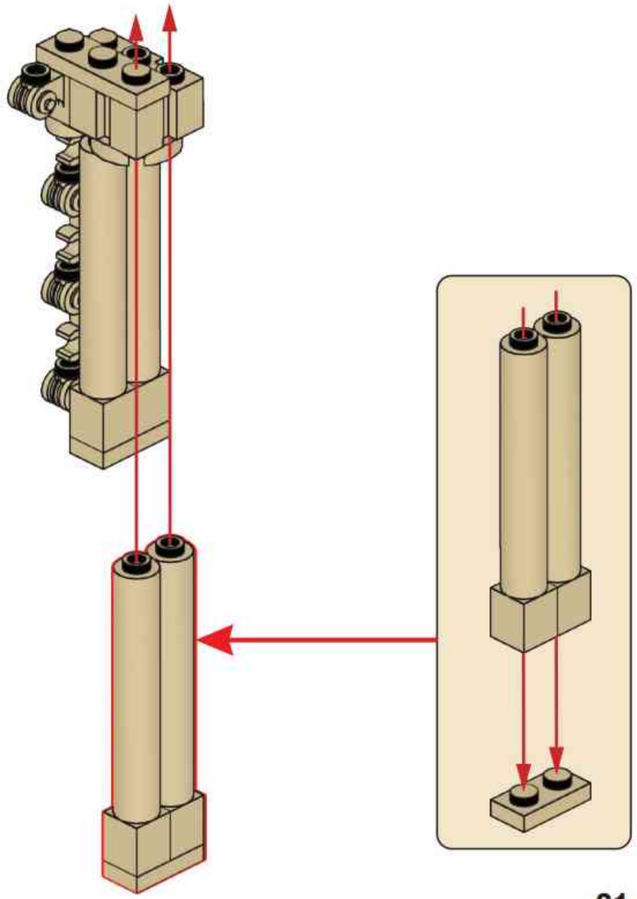

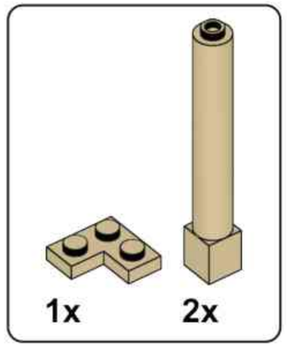

N40

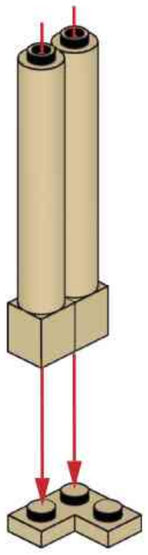

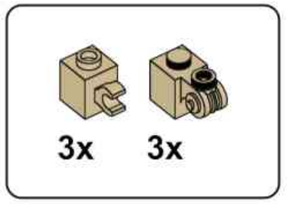

N41

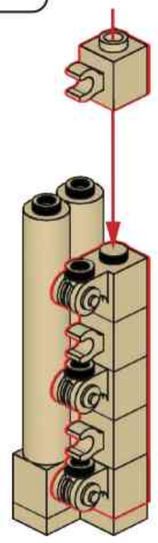

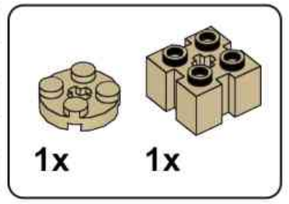

N42

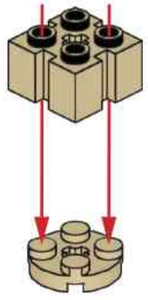

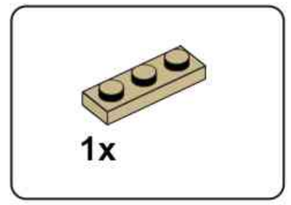

N43

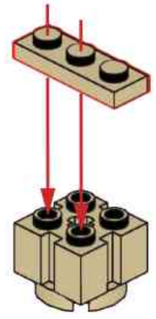

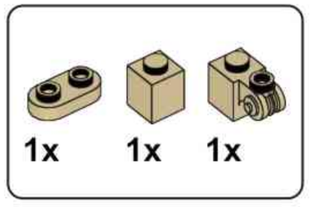

N44

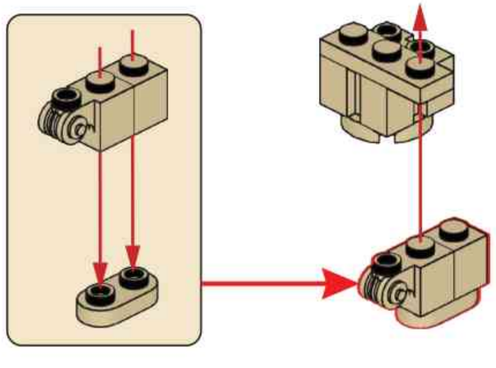

N45

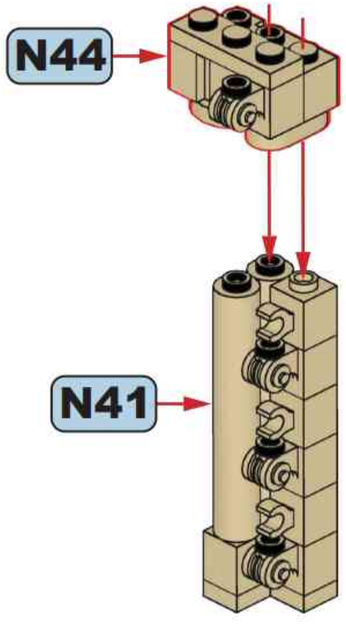

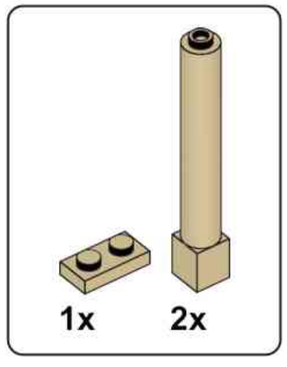

N46

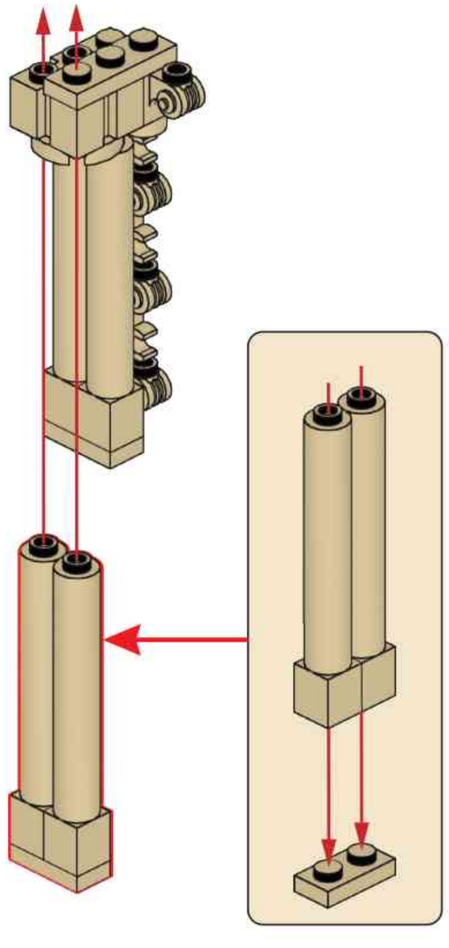

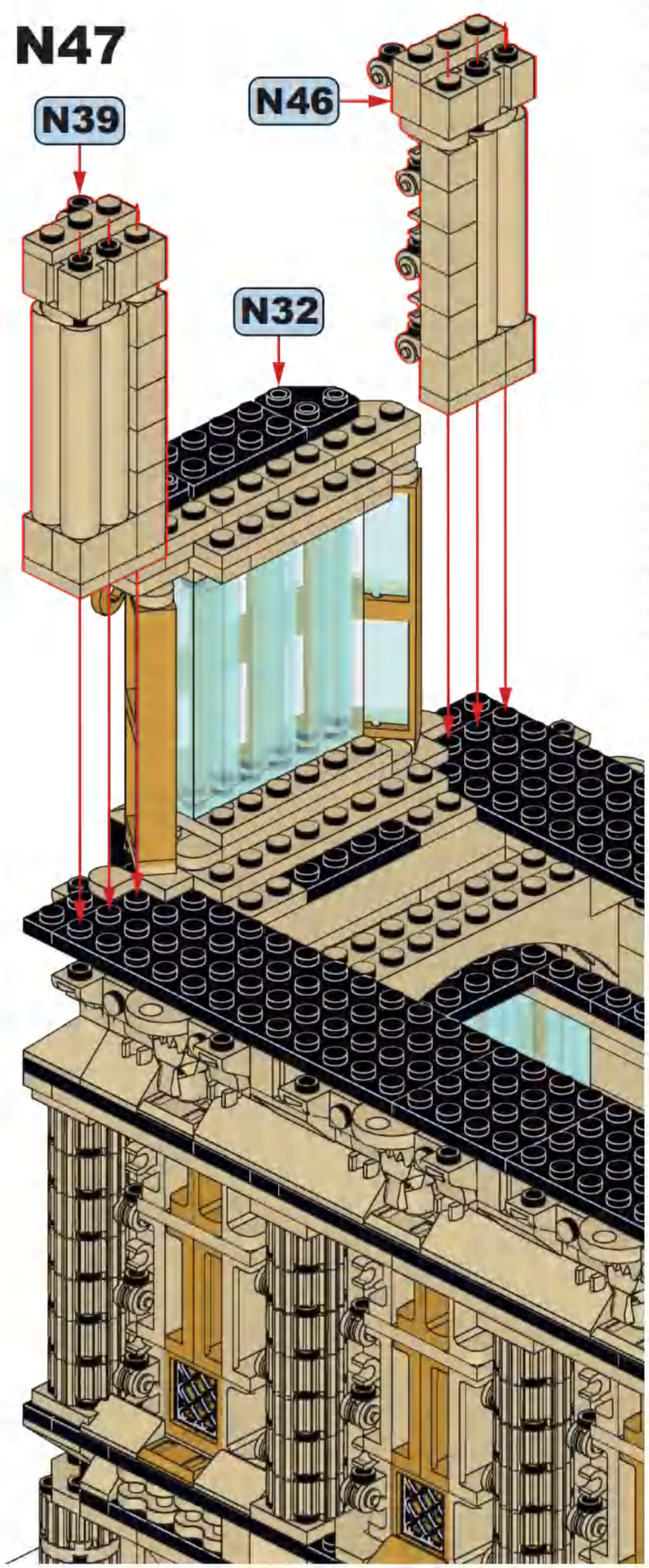
N47
N39
N46
N32

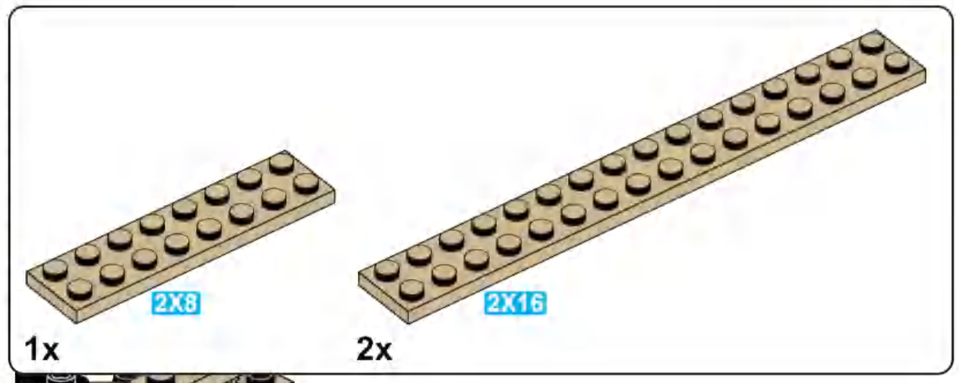
2X8
1x
2X16
2x

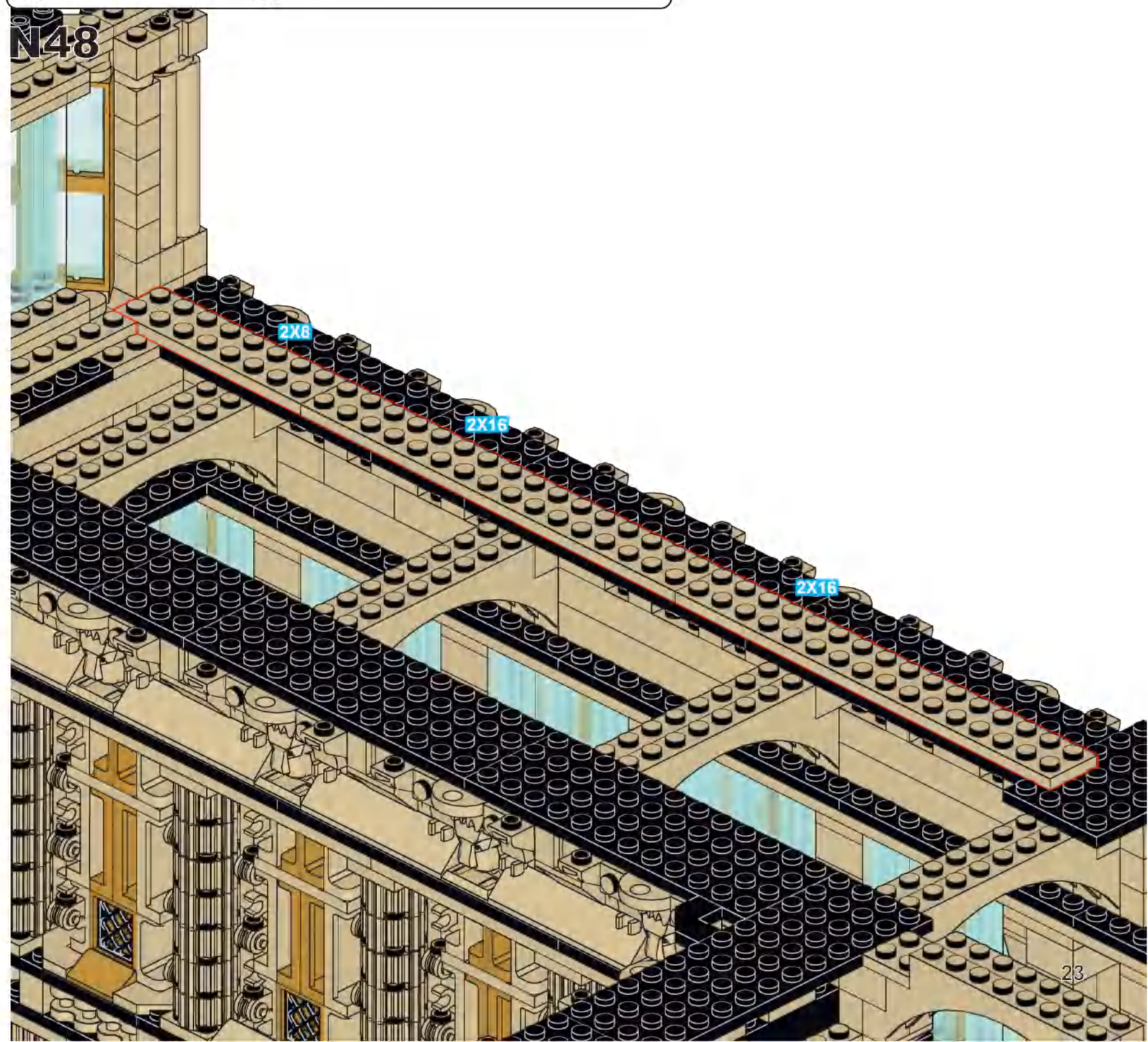
N48
2X8
2X16
2X16

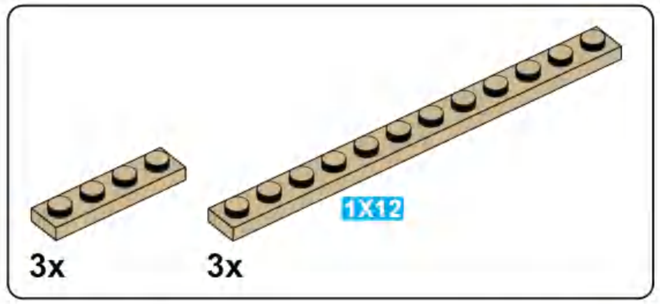

N49

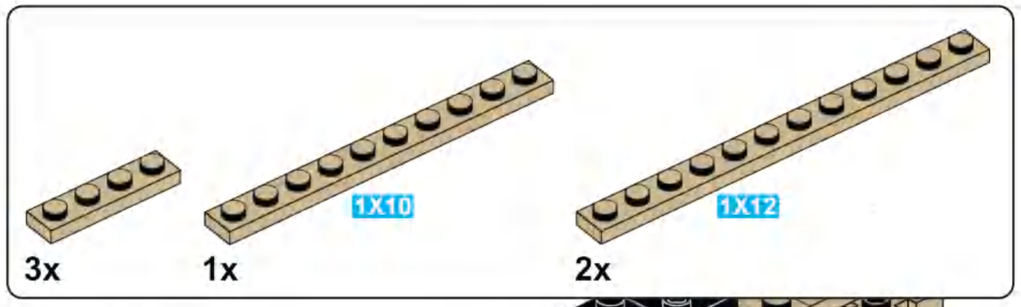

N50

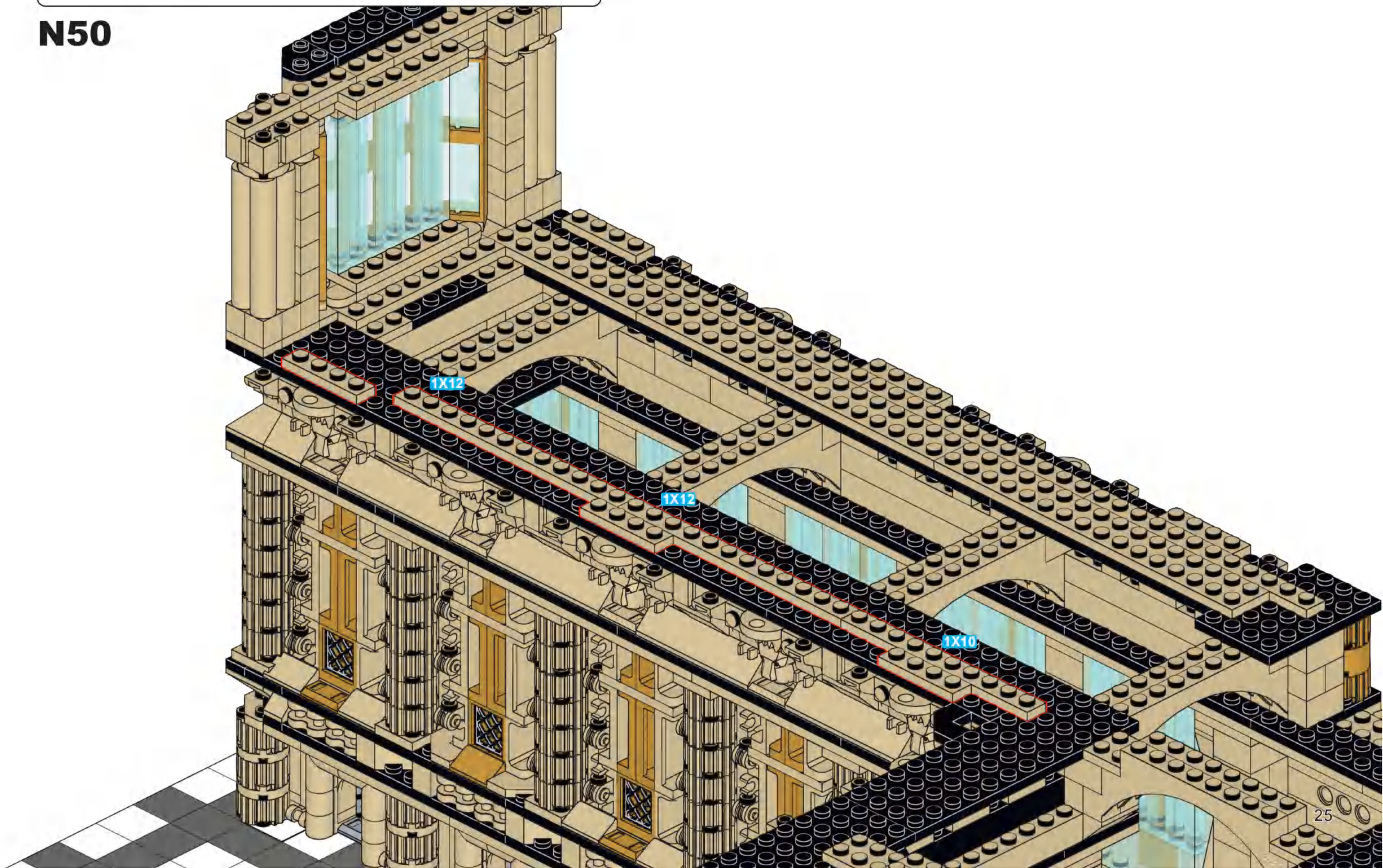

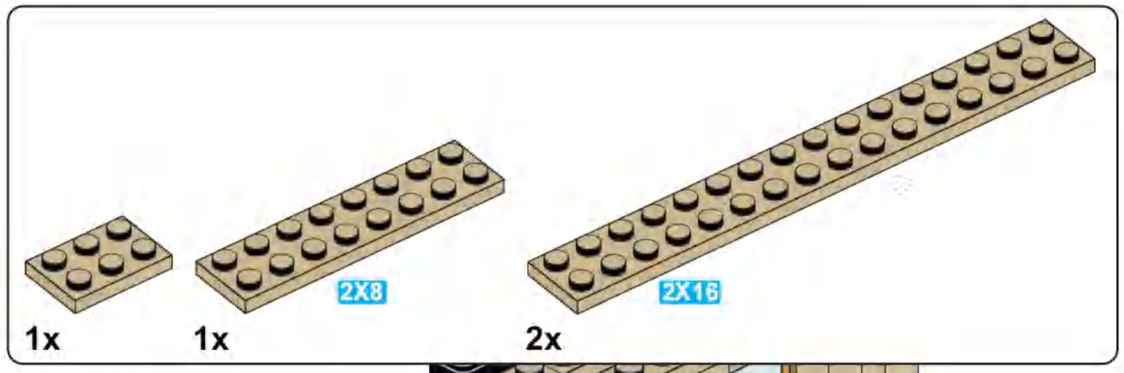

N51

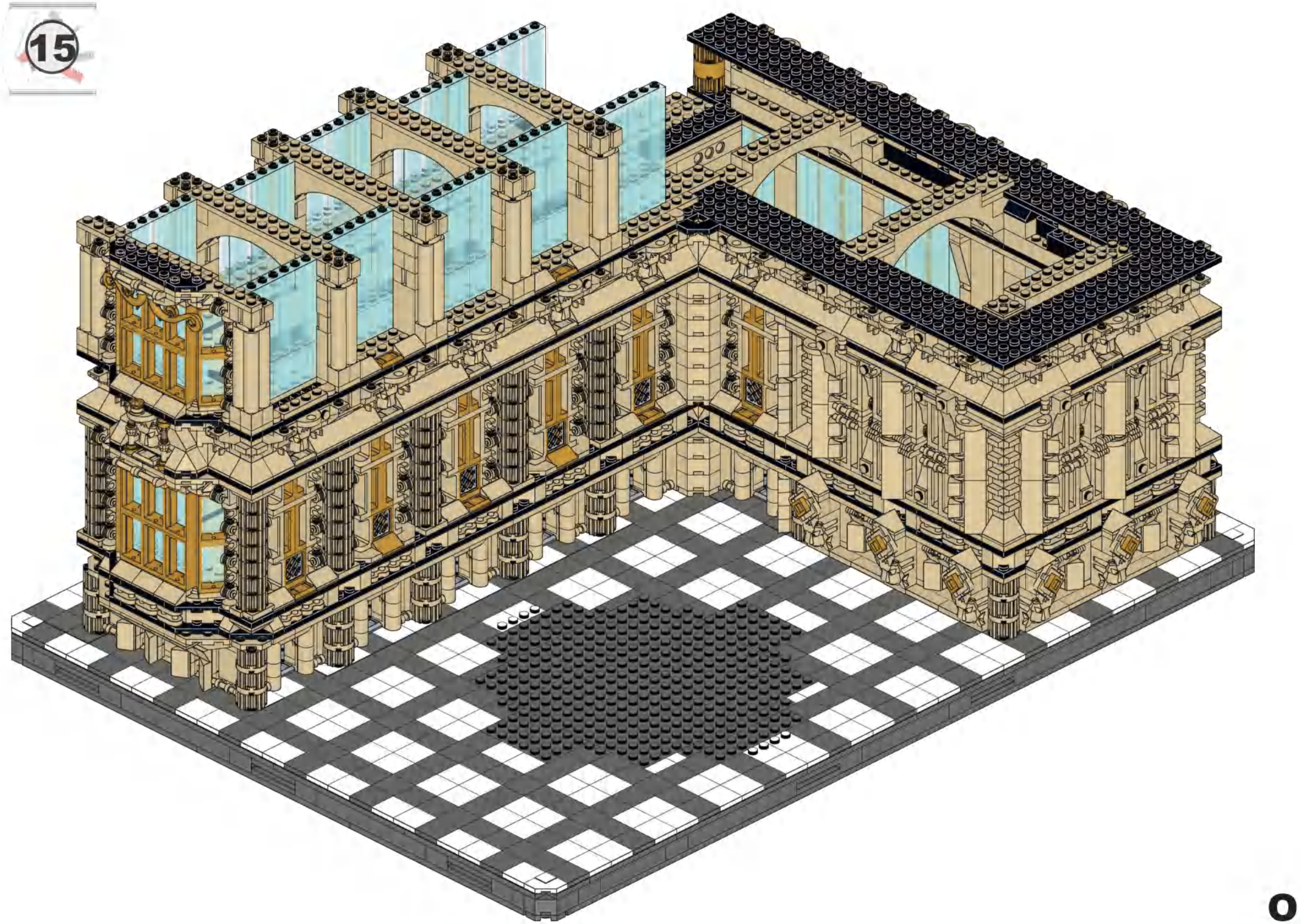
15
O

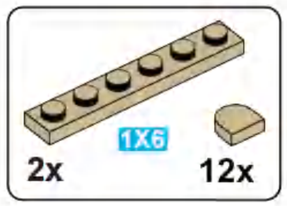

01

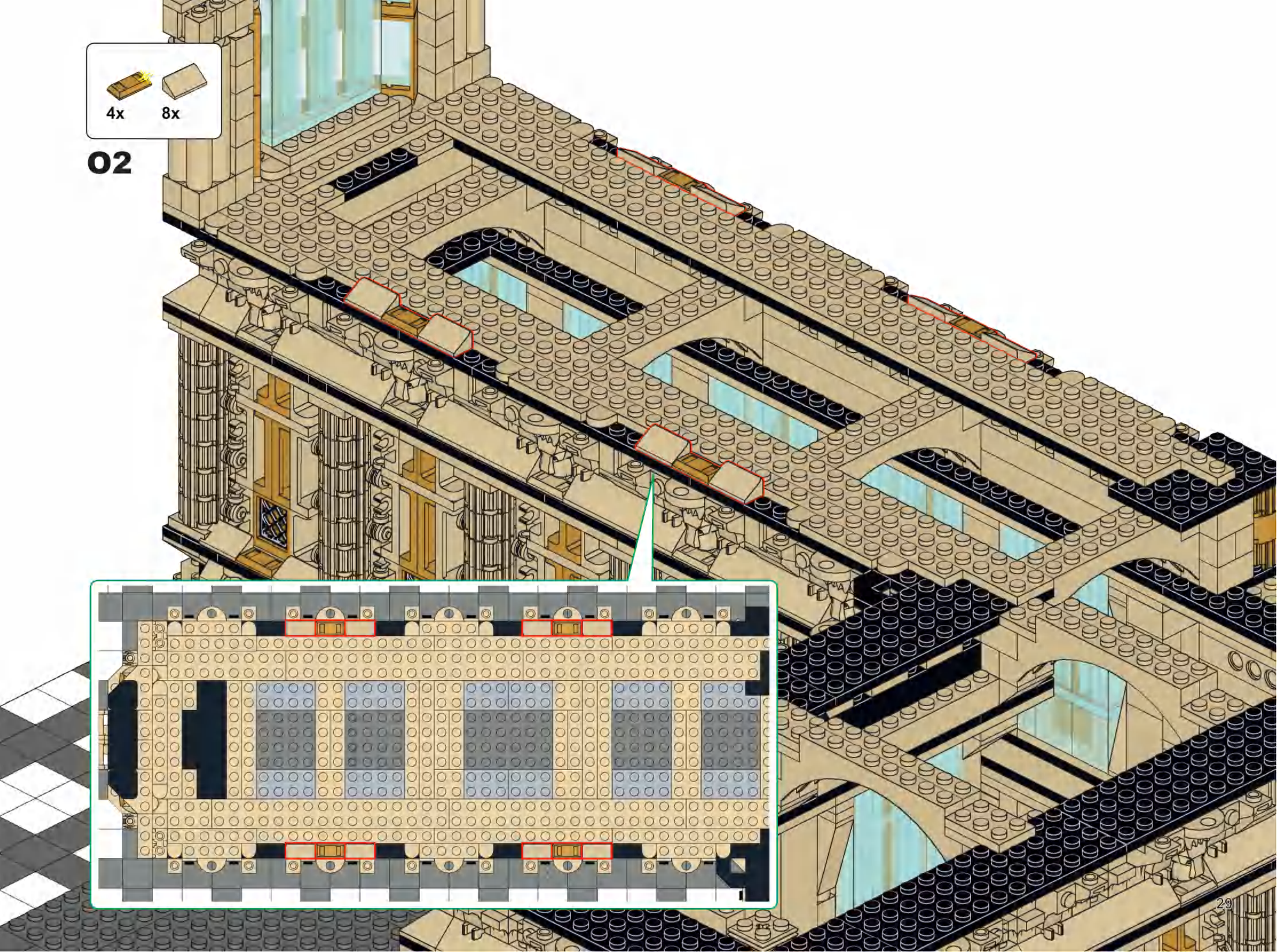
4x
8x
02

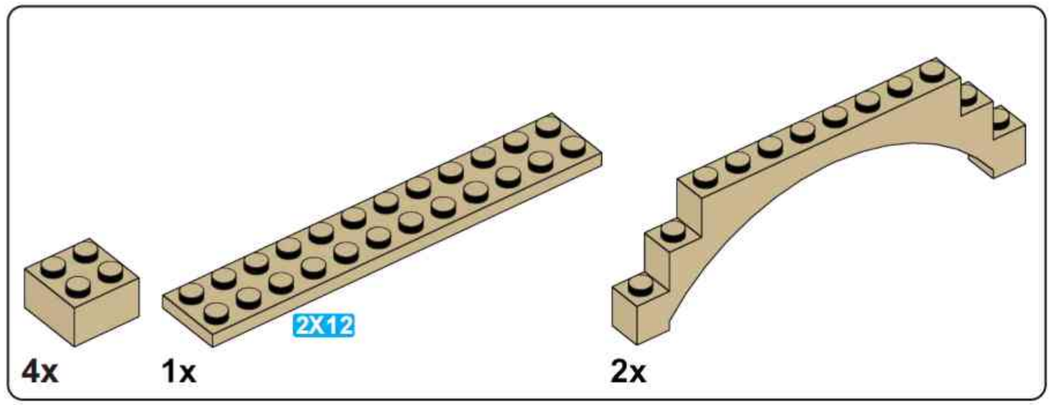

03

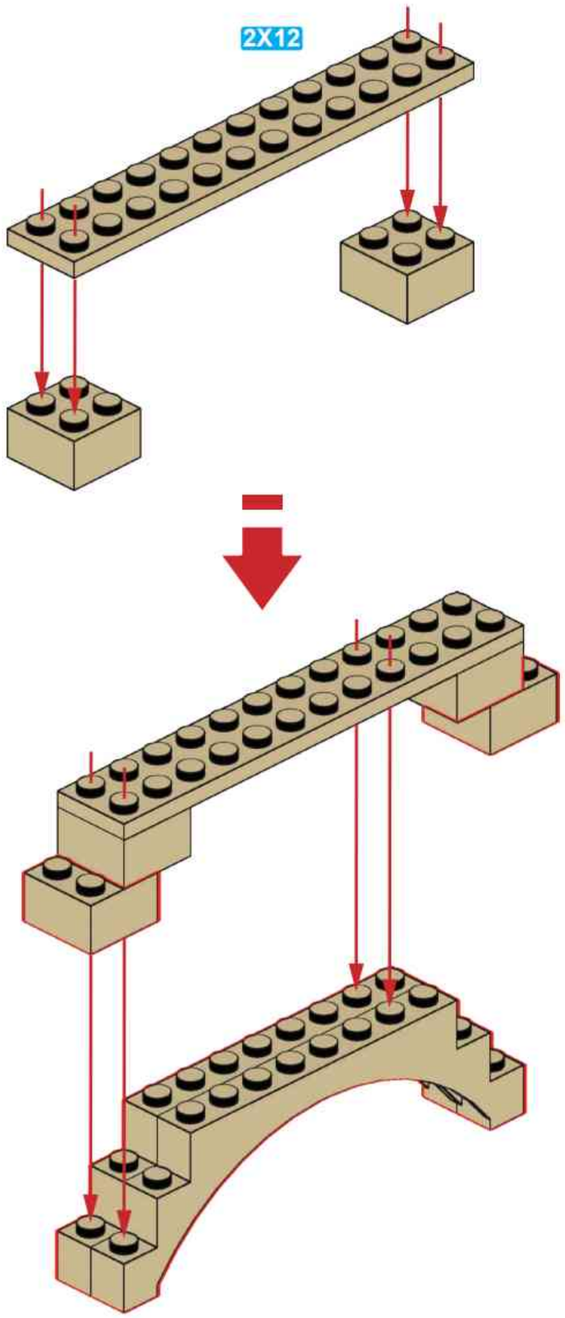

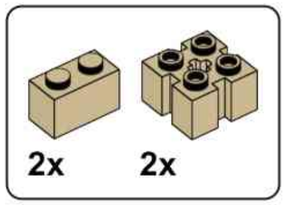

04

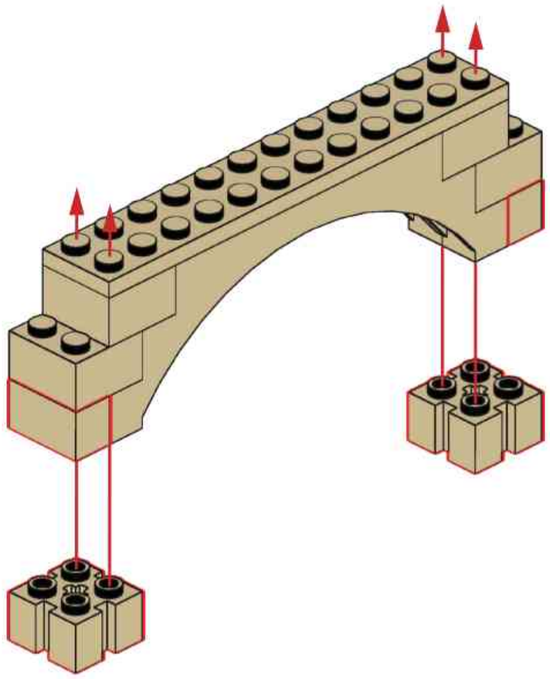

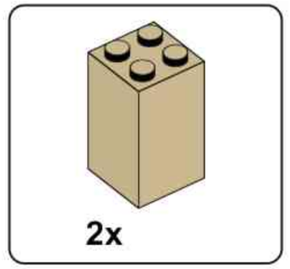

05

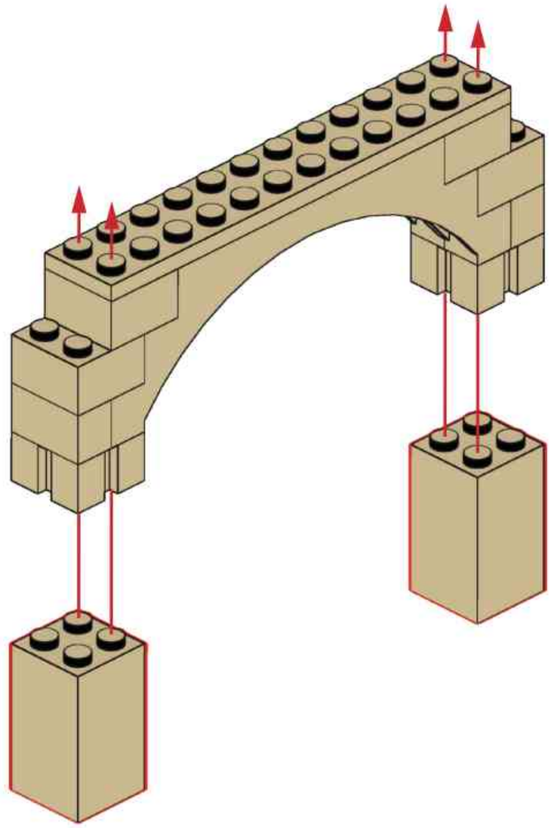

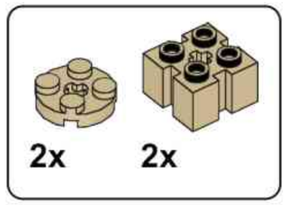

06

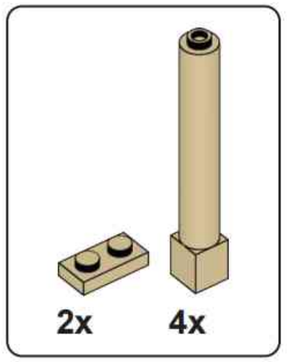

07

08

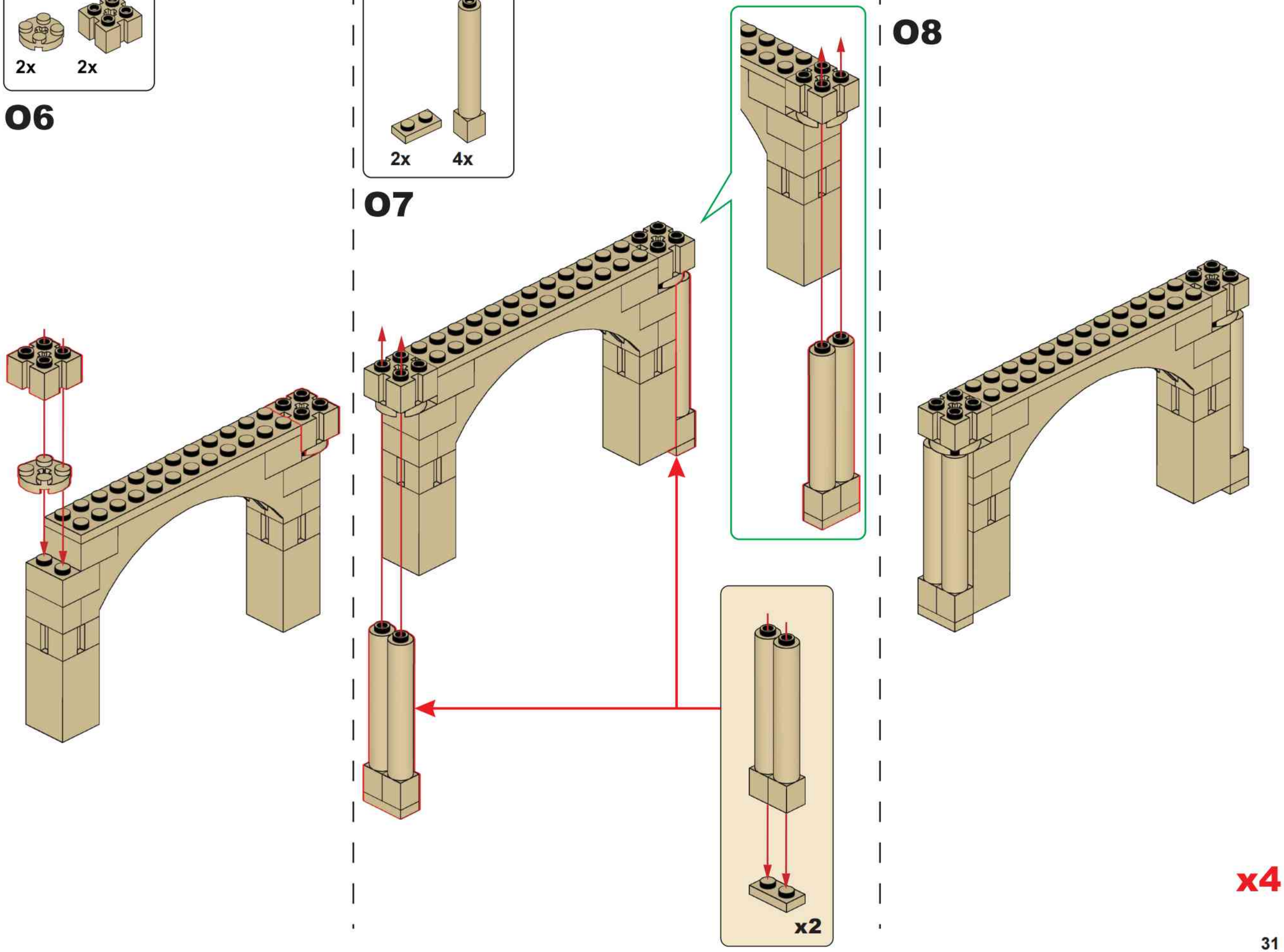

09

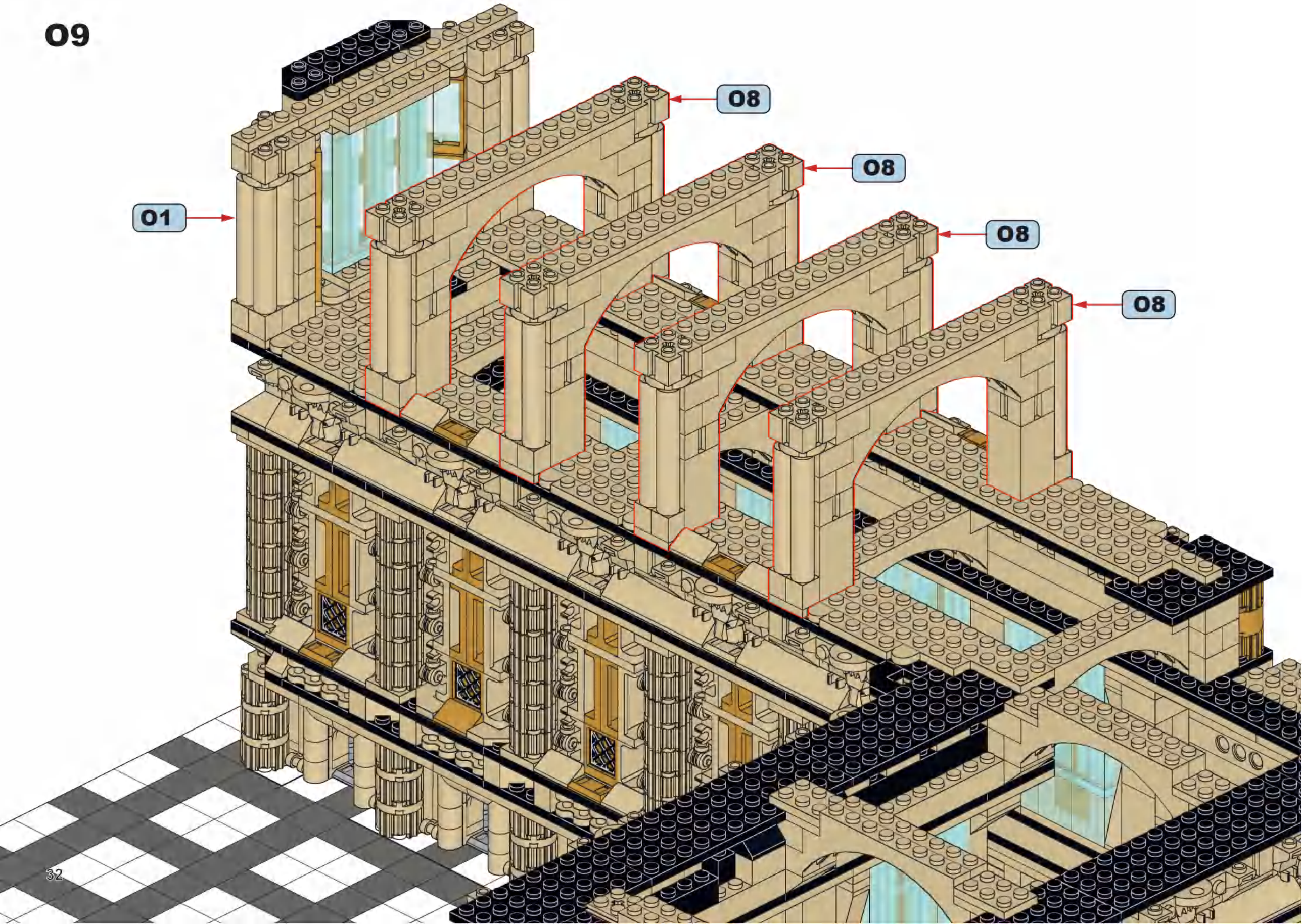

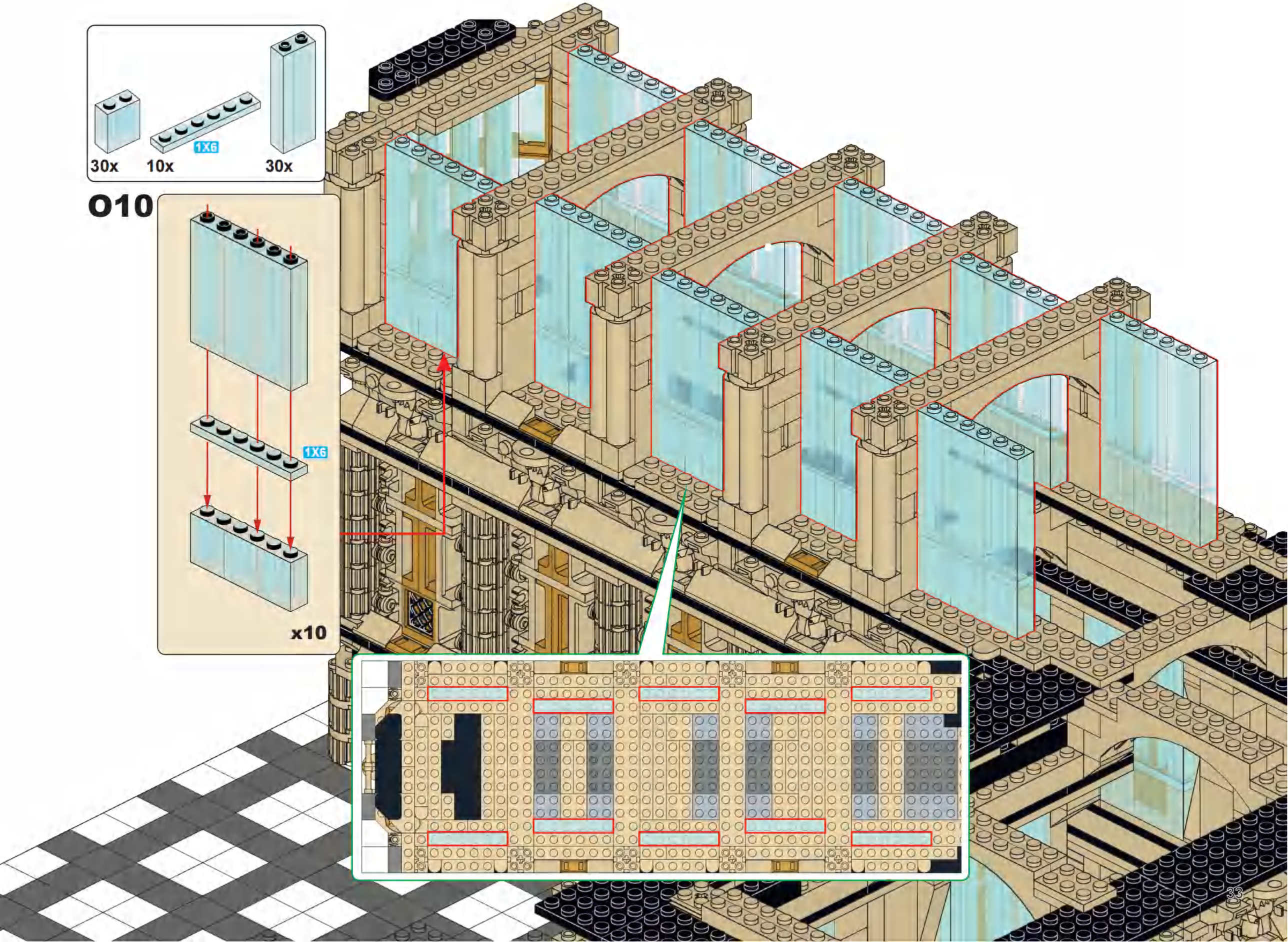
30x
10x
1X6
30x
O10
1X6
x10

16
P

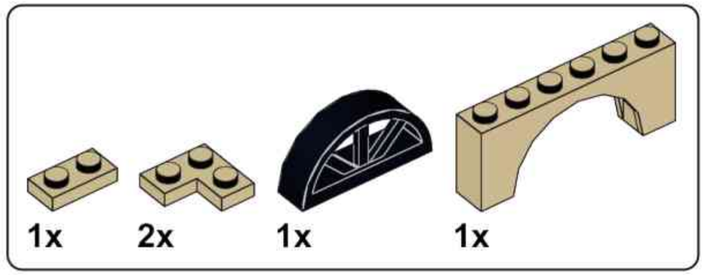

P1

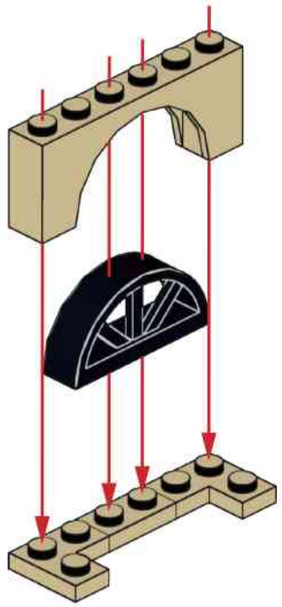

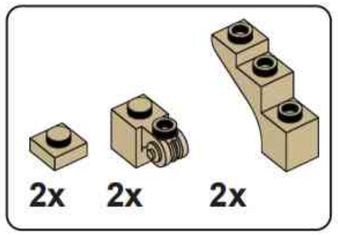

P2

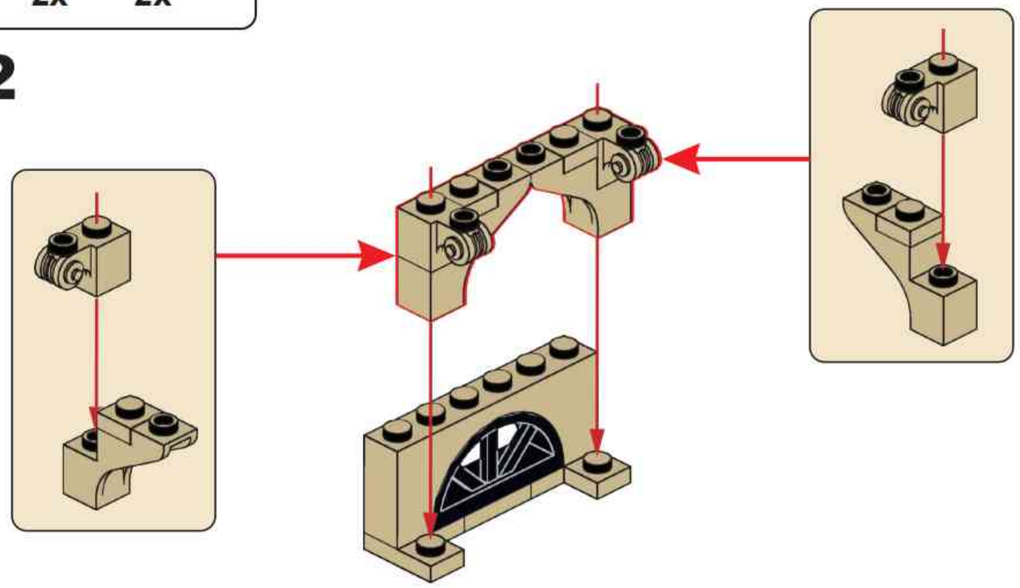

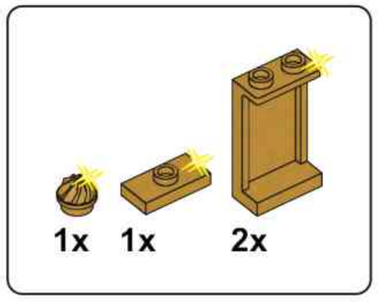

P3

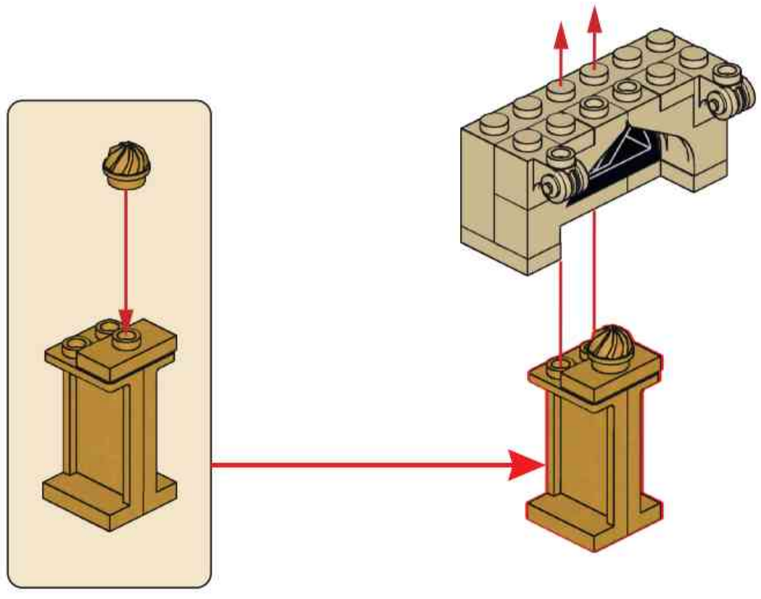

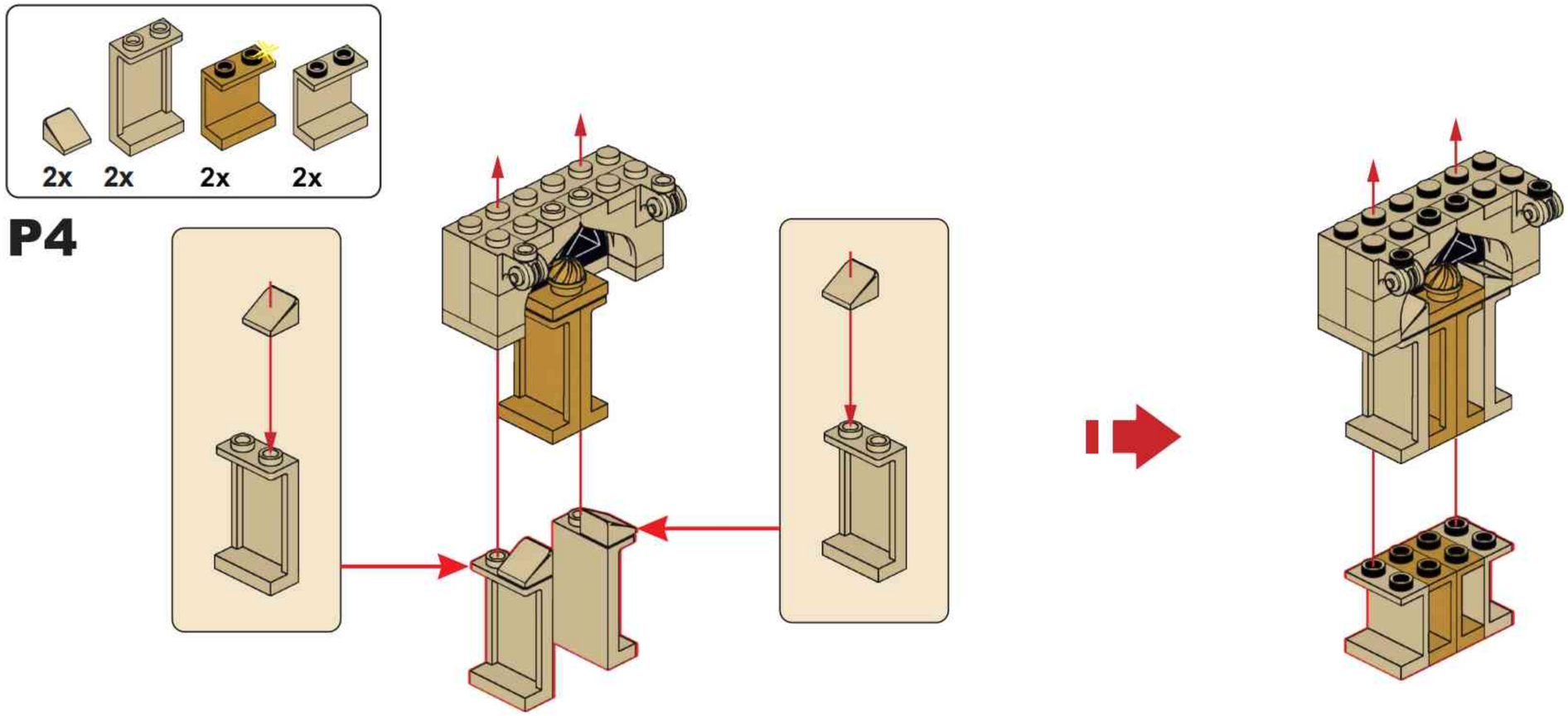
2x
2x
2x
2x
P4

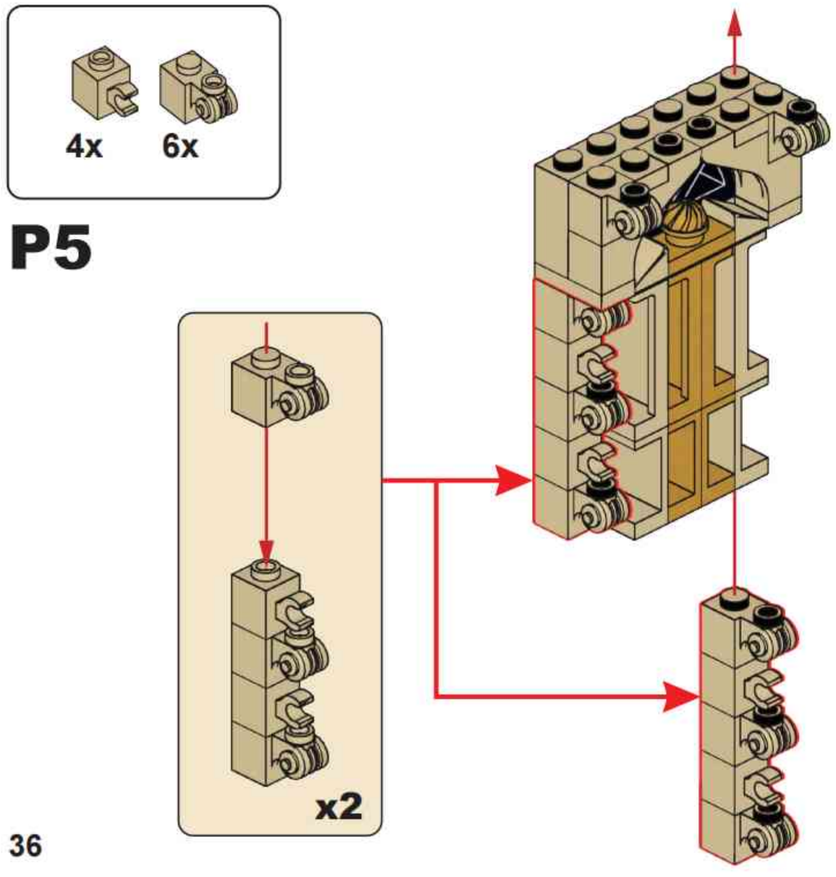
4x
6x
P5
x2

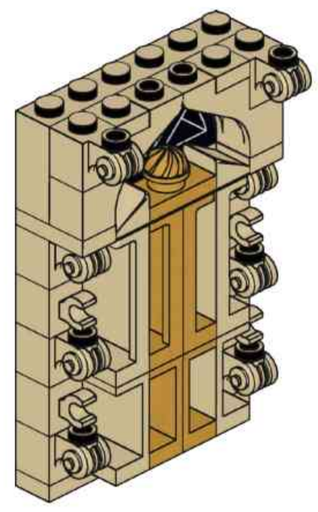
P6
x10

P7

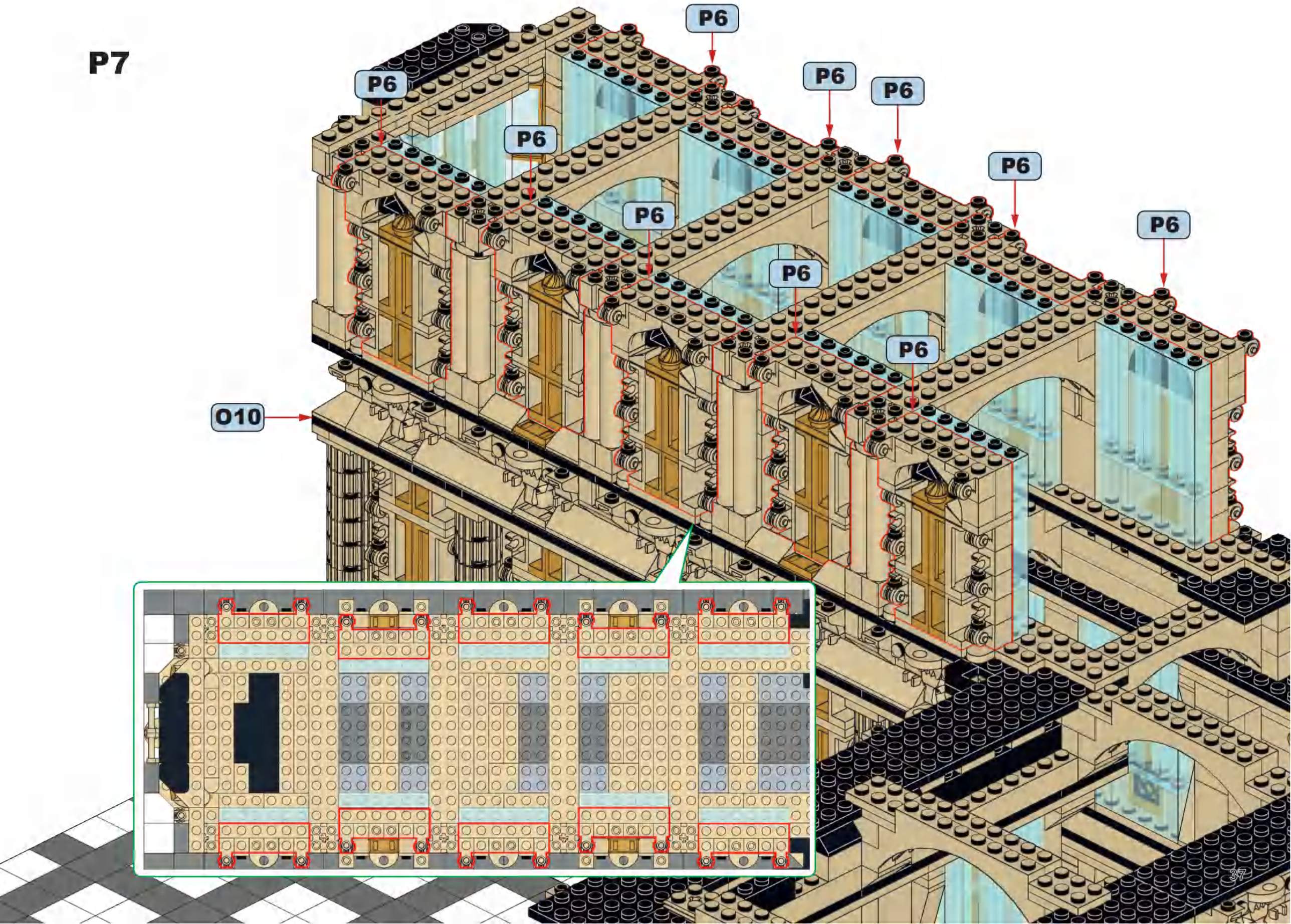

17

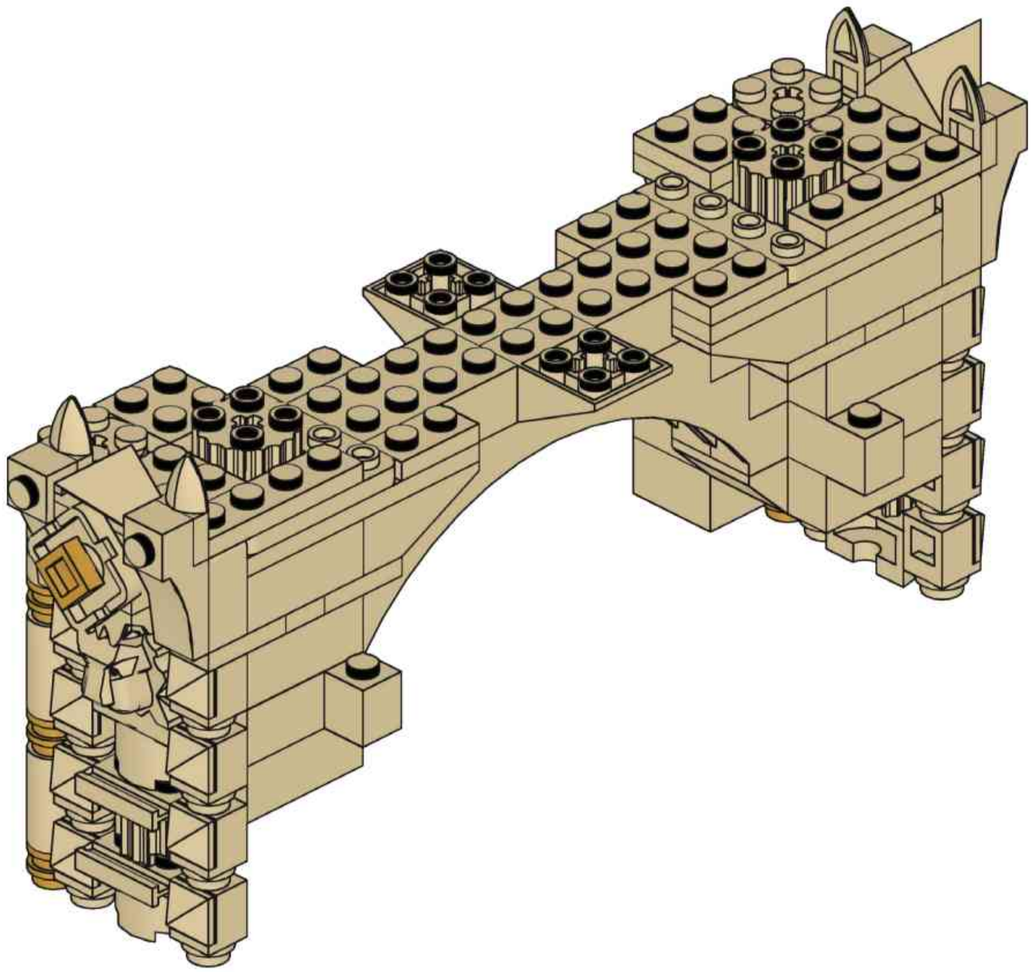

Q

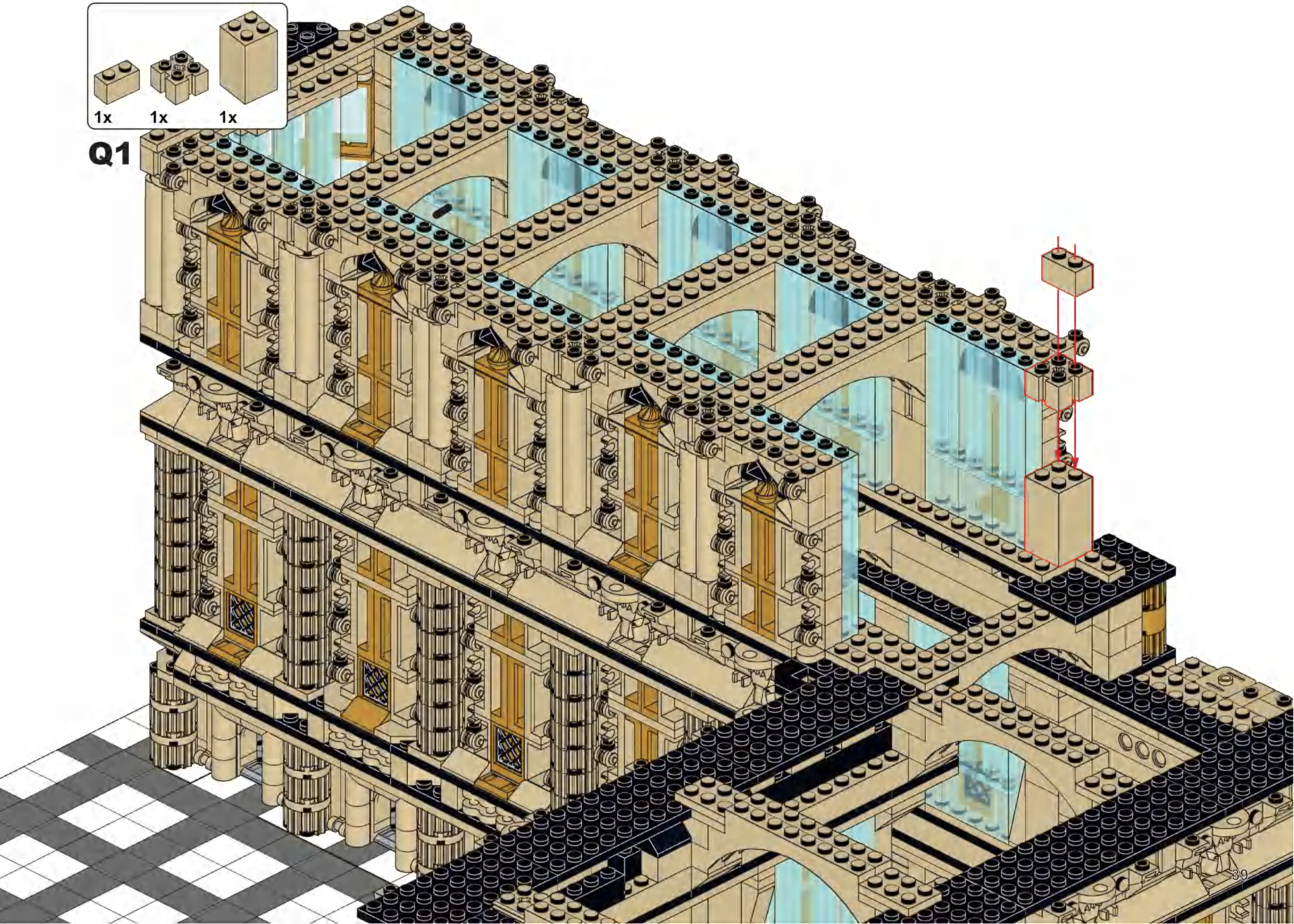
1x
1x
1x
Q1

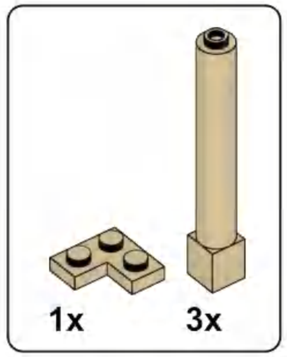

Q2

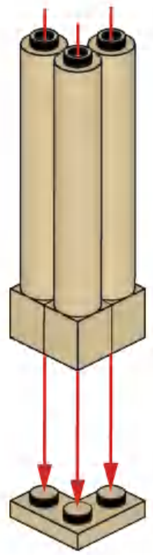

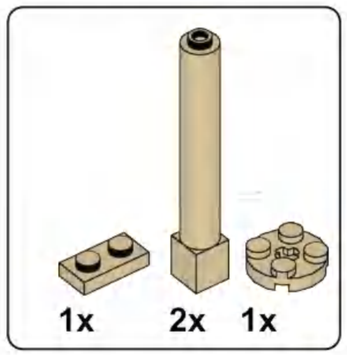

Q3

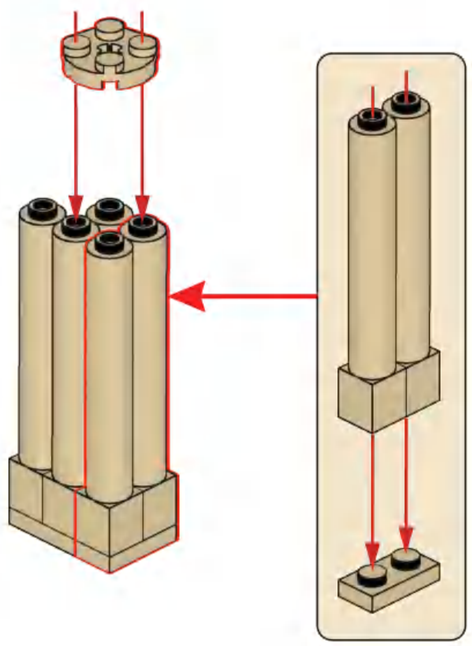

Q4

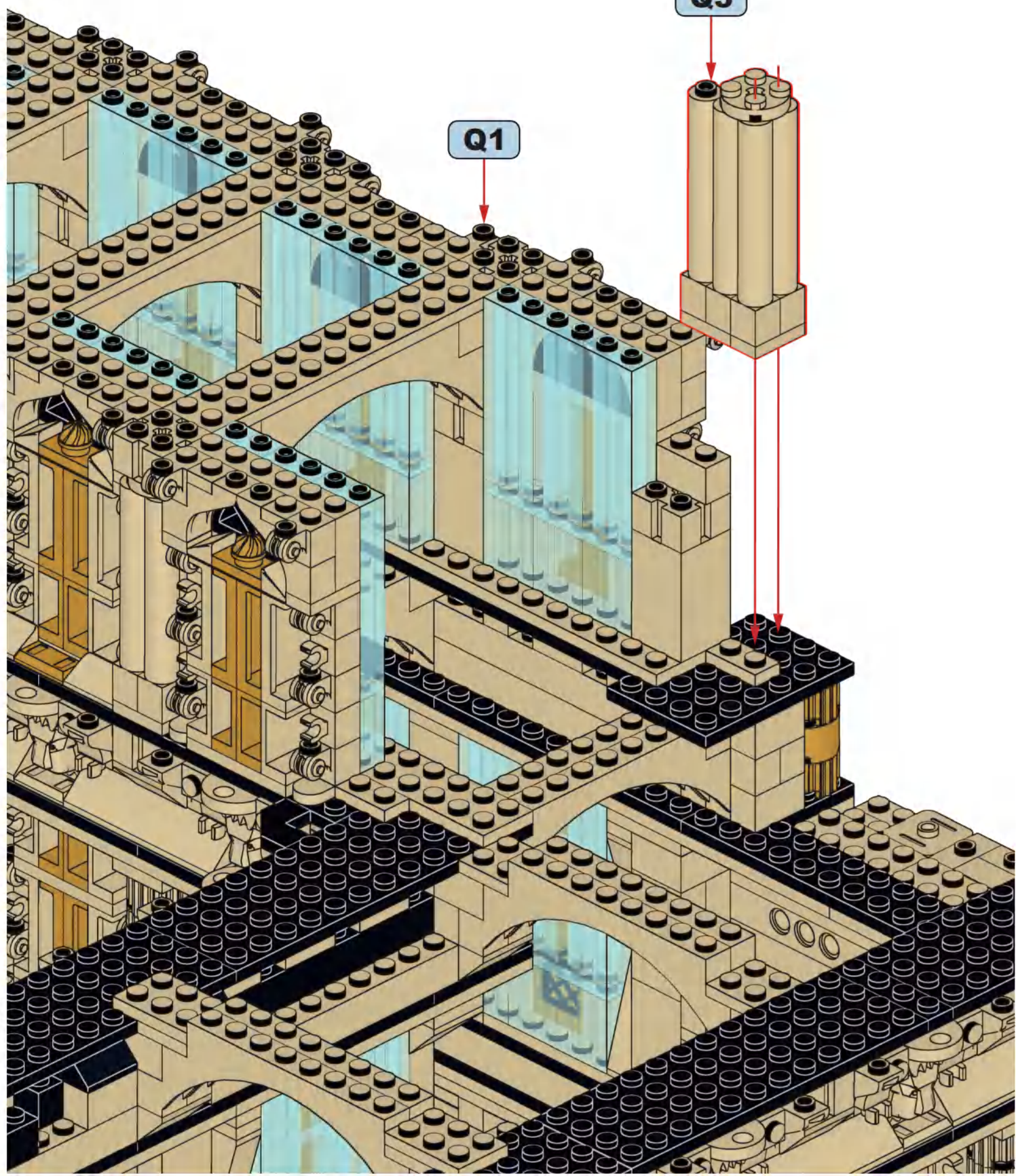

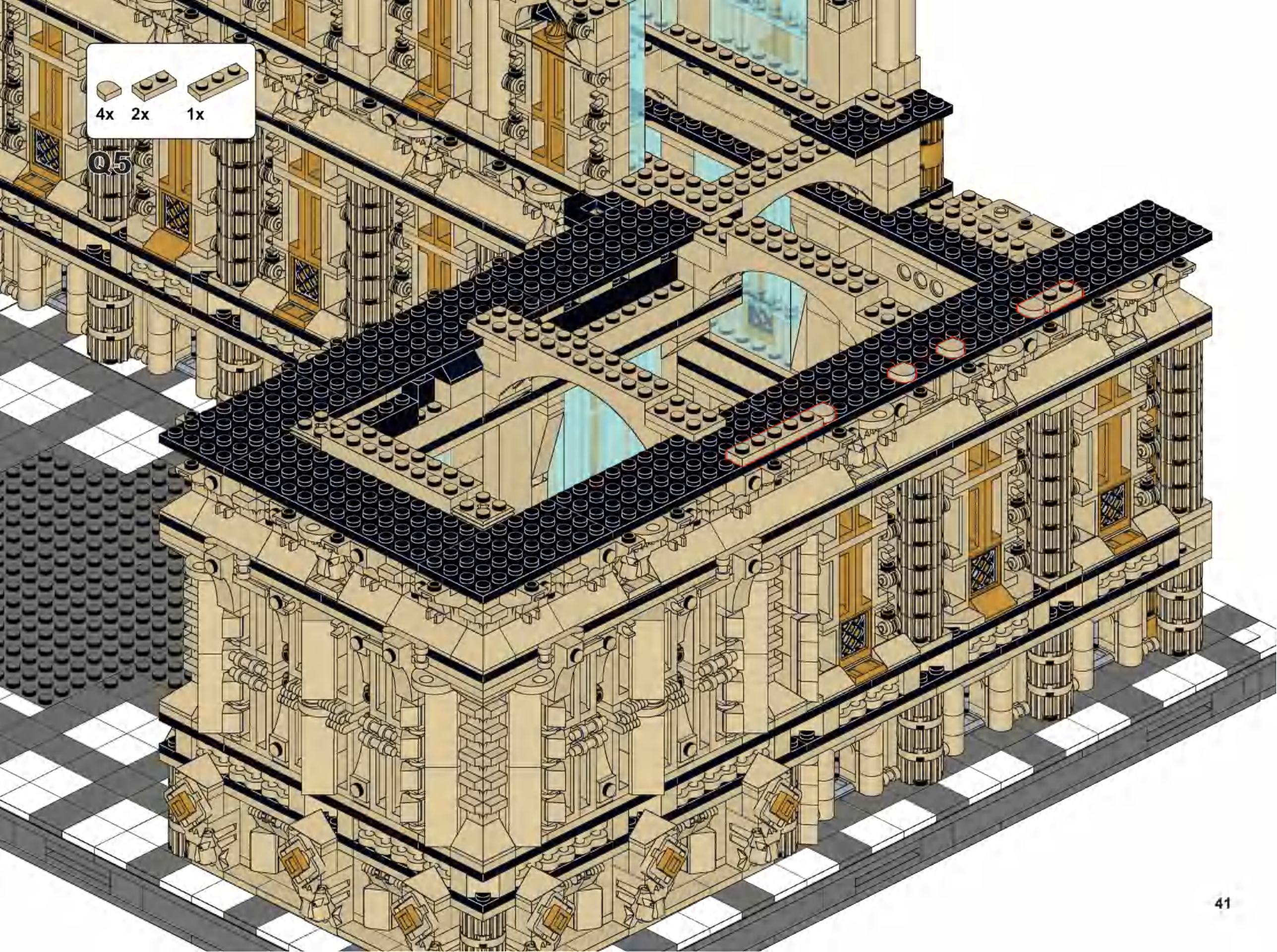
4x
2x
1x
Q5

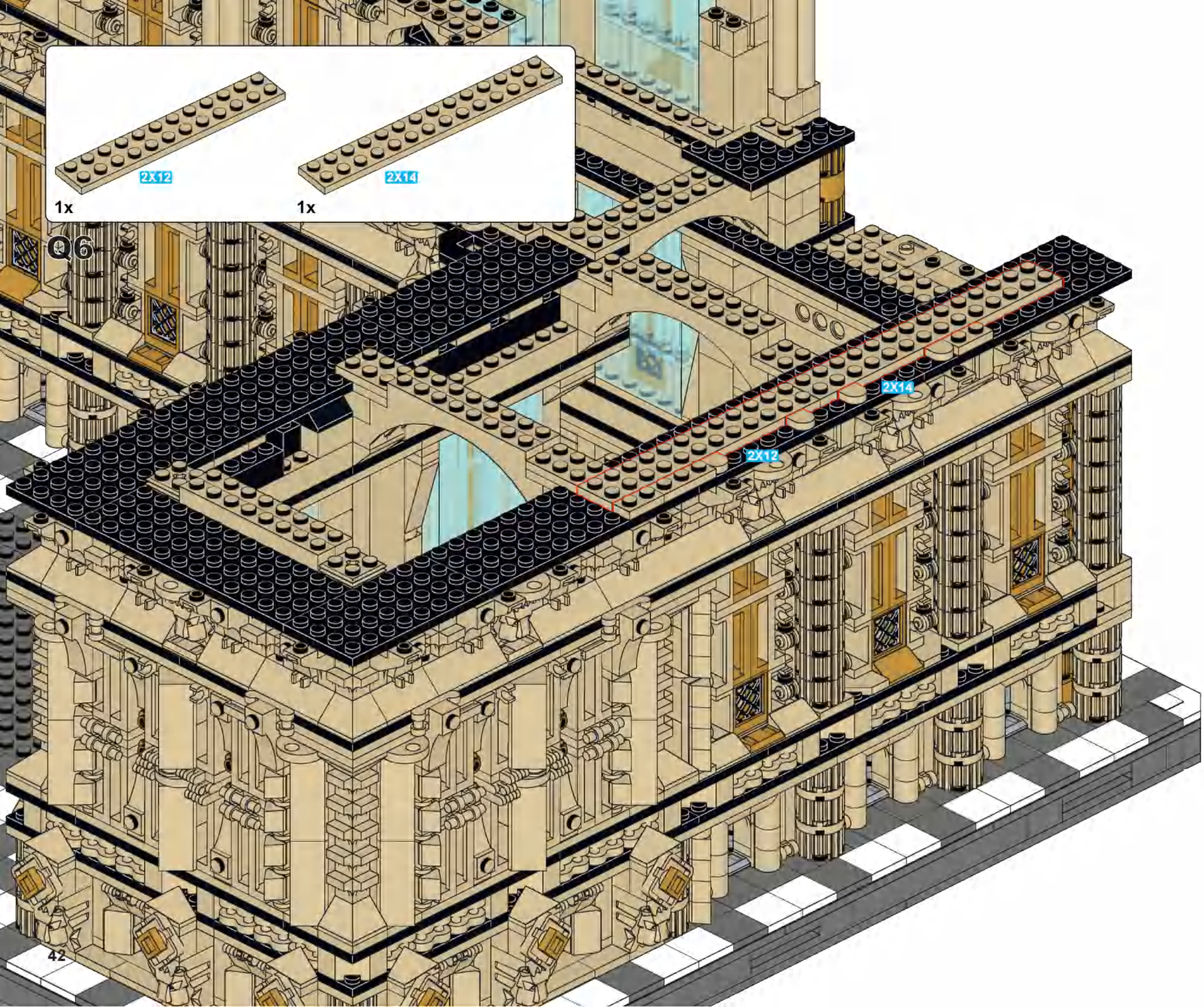
2X12
1x
2X14
1x
Q6
2X14
2X12

2x
1x
1x
Q.7

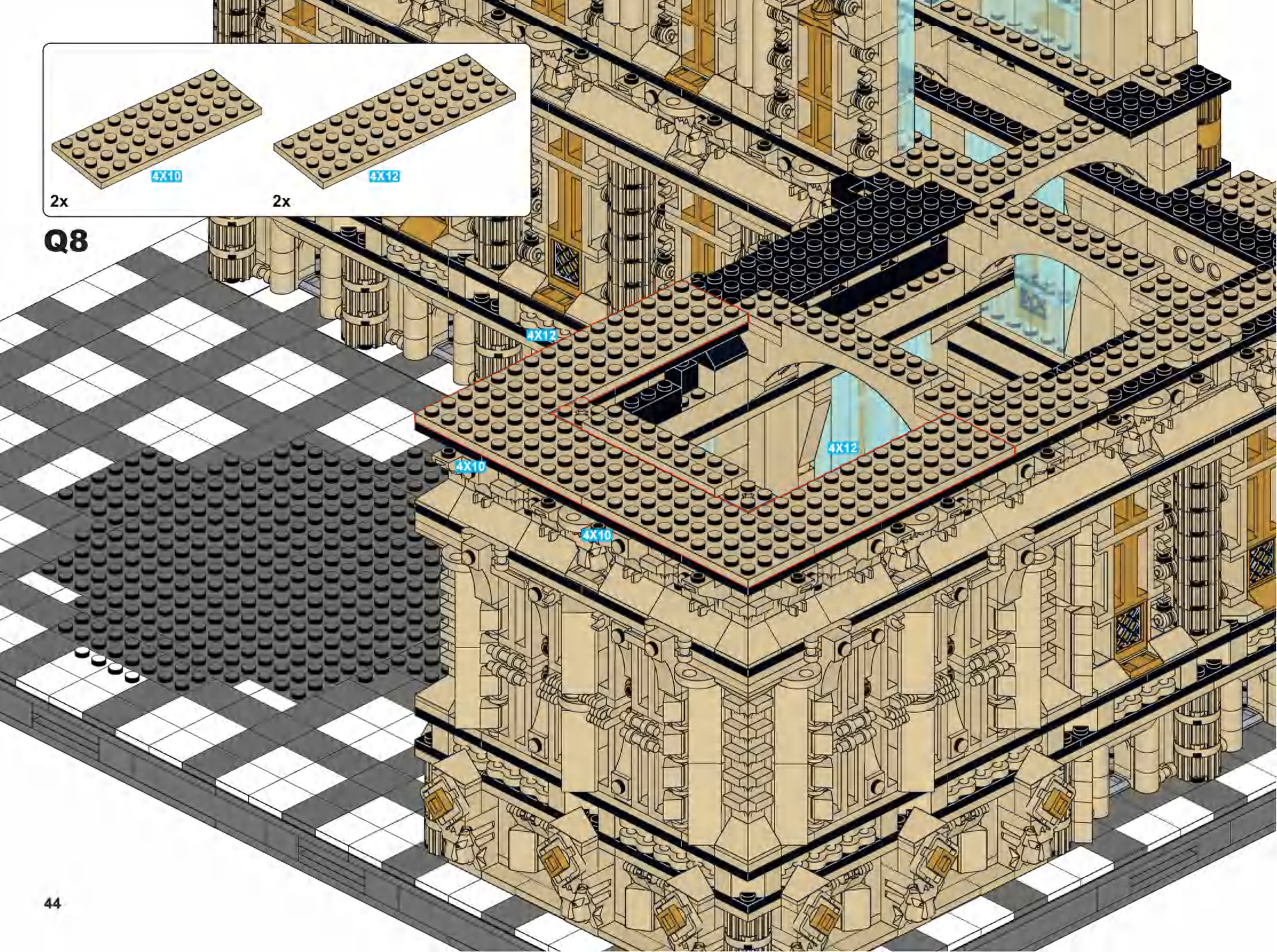
4X10
2x
4X12
2x
Q8
4X12
4X12
4X10
4X10

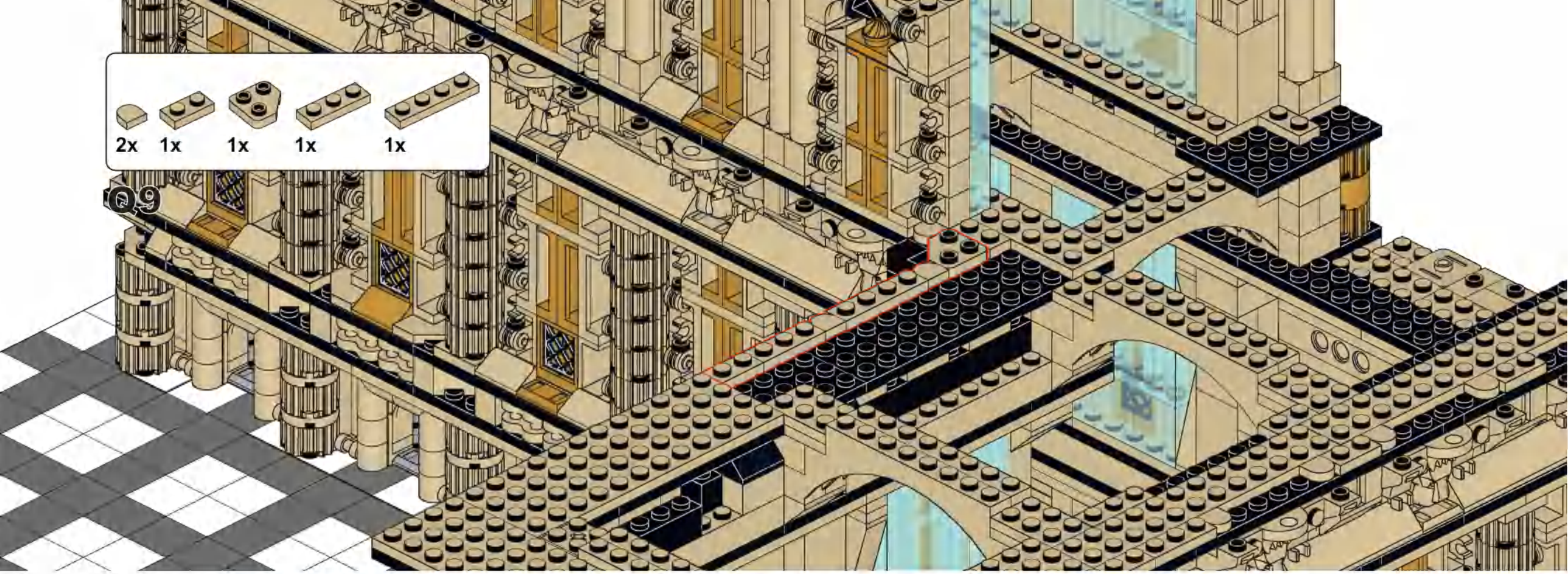
2x
1x
1x
1x
1x
Q9

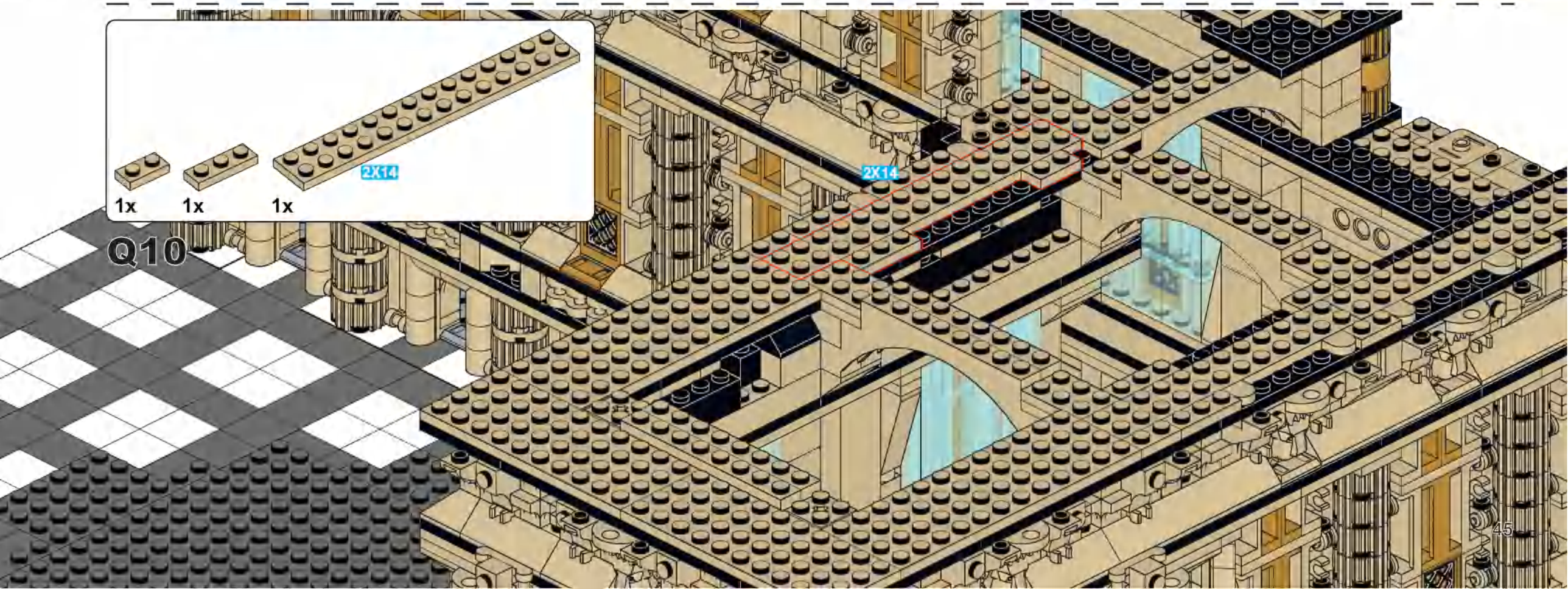
2X14
1x
1x
1x
2X14
Q10

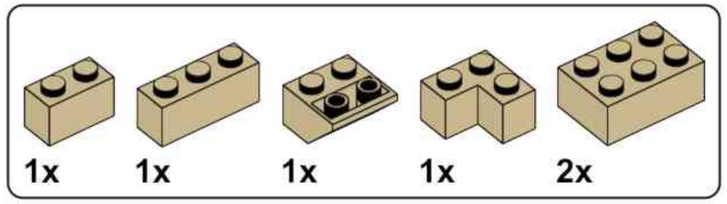

Q11

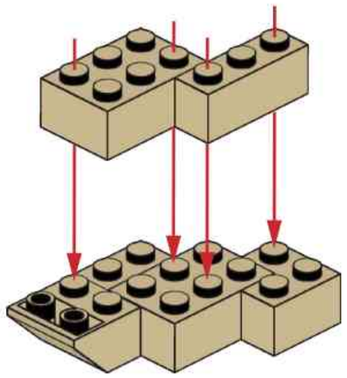

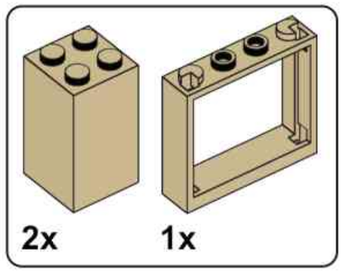

Q12

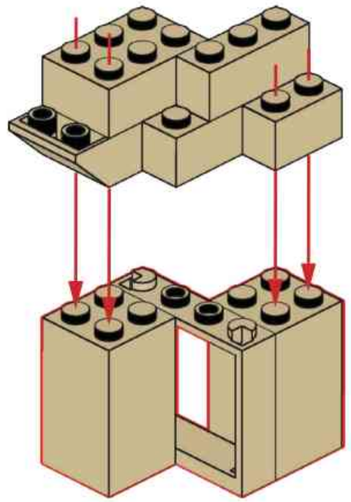

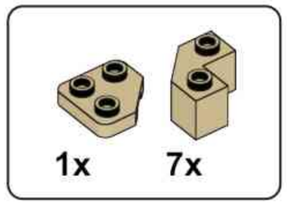

Q13

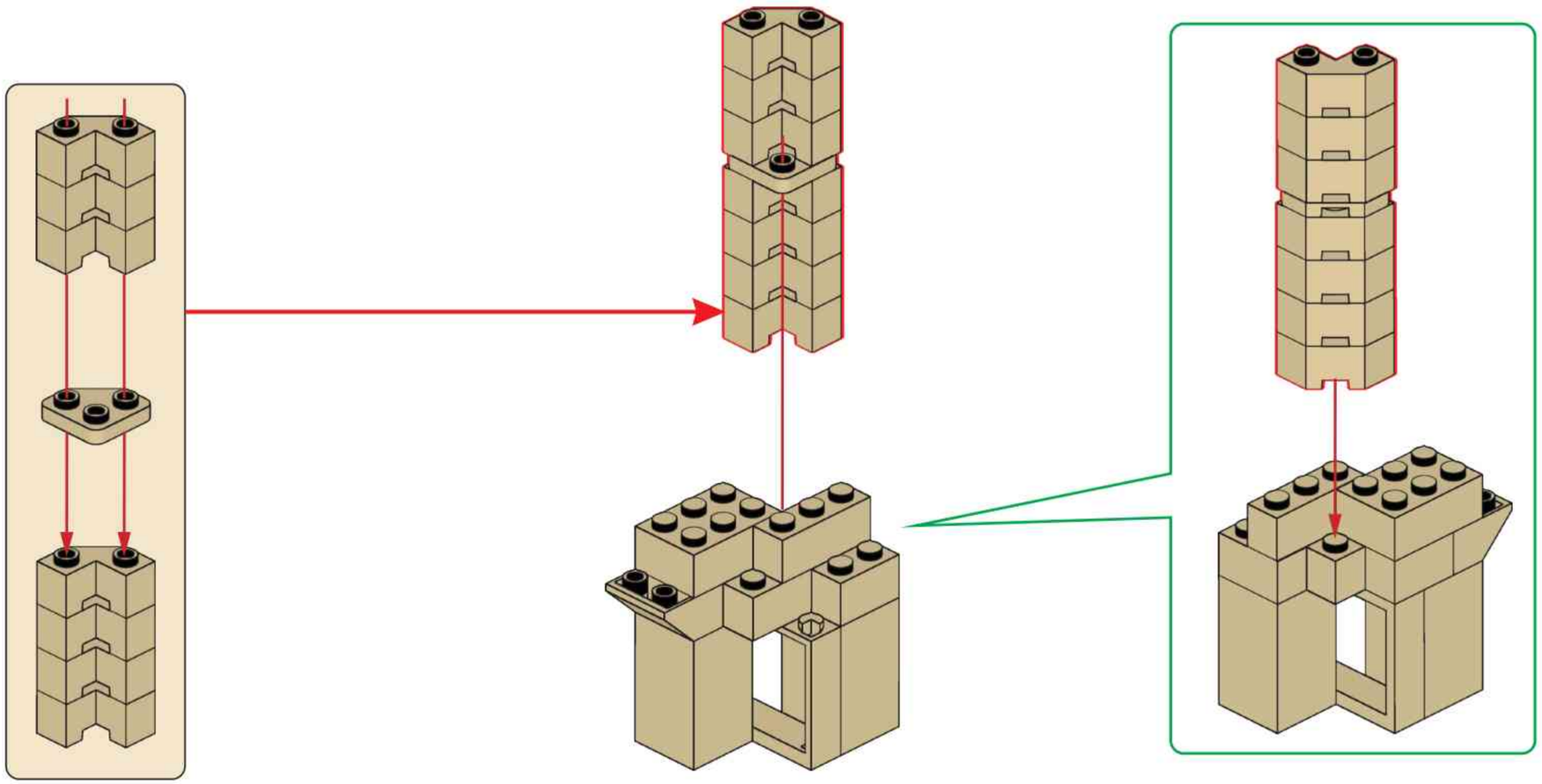

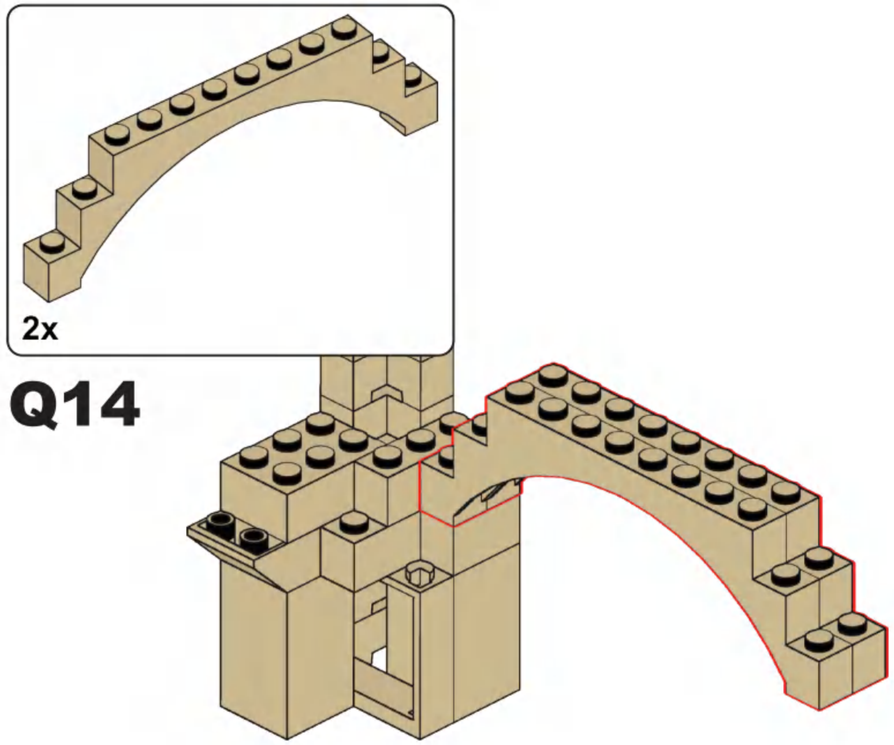

Q14

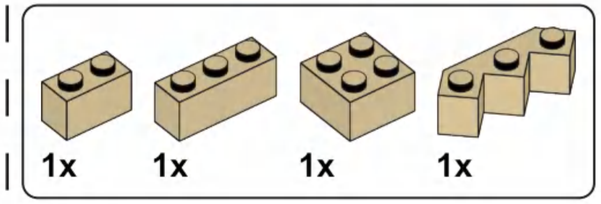

Q15

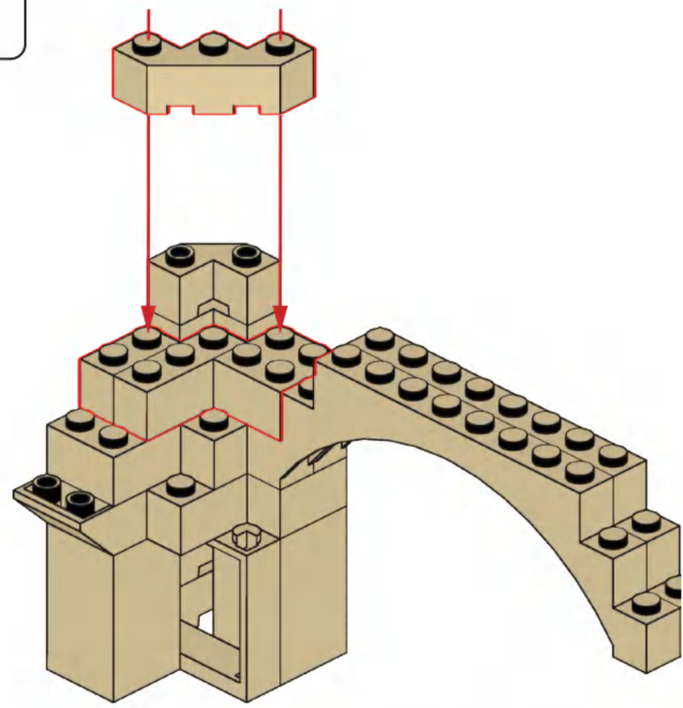

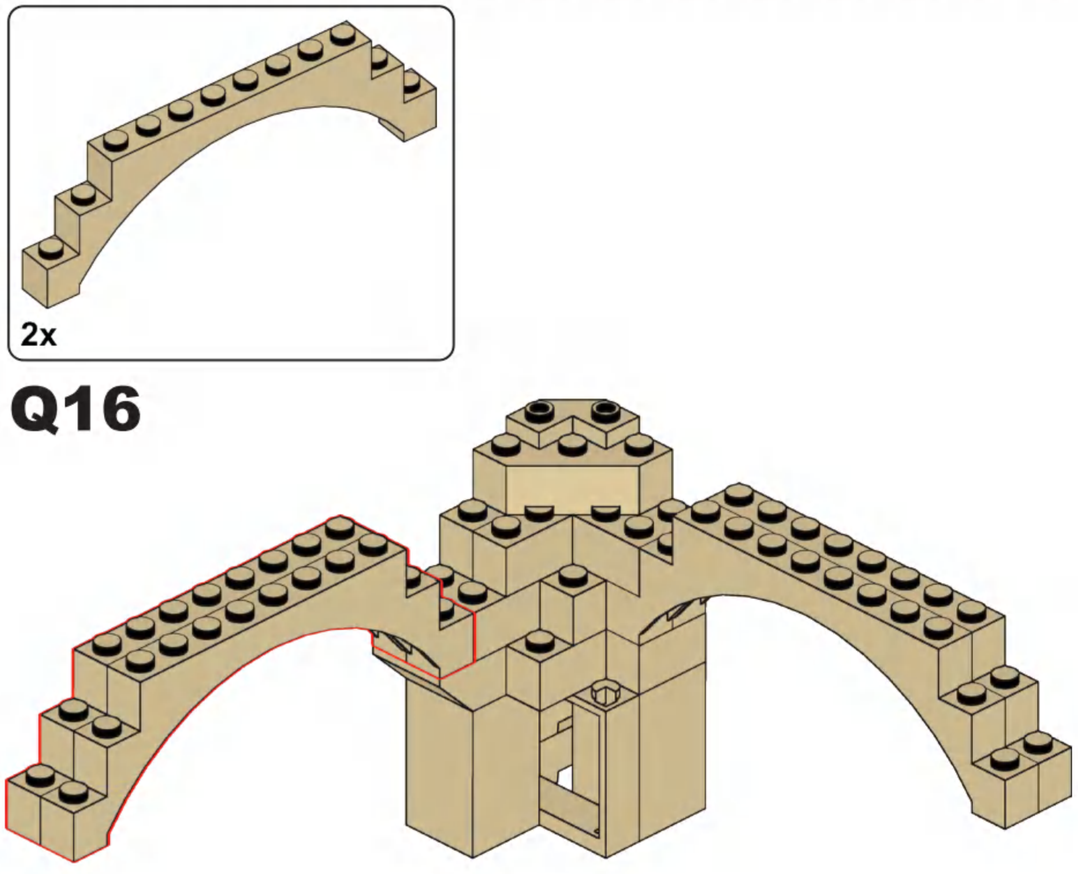

Q16

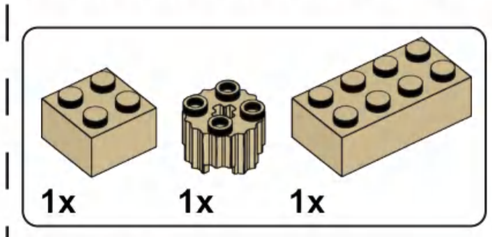

Q17

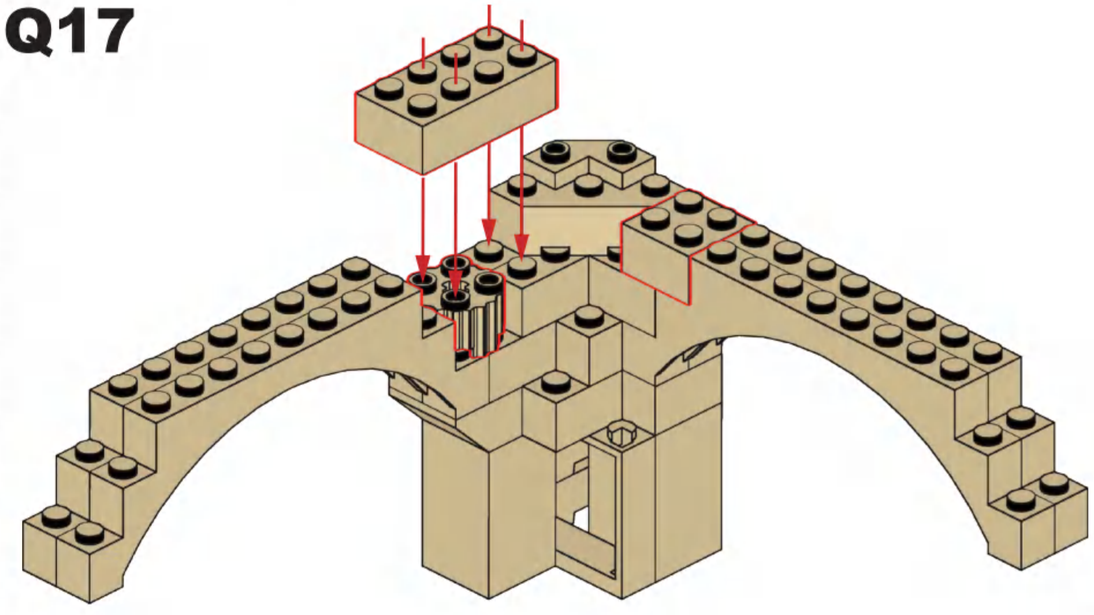

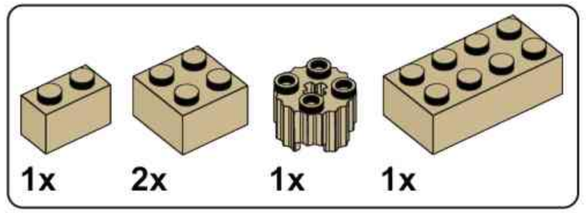

Q18

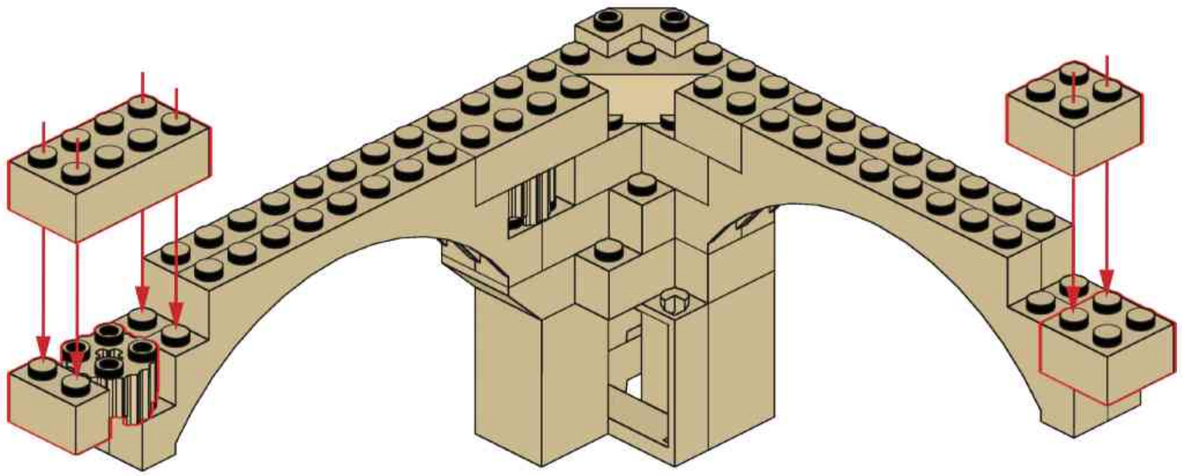

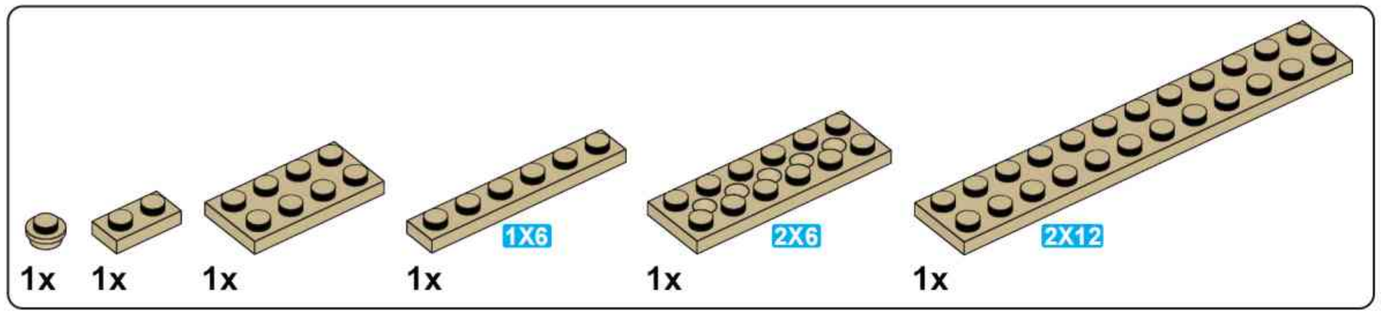

Q19

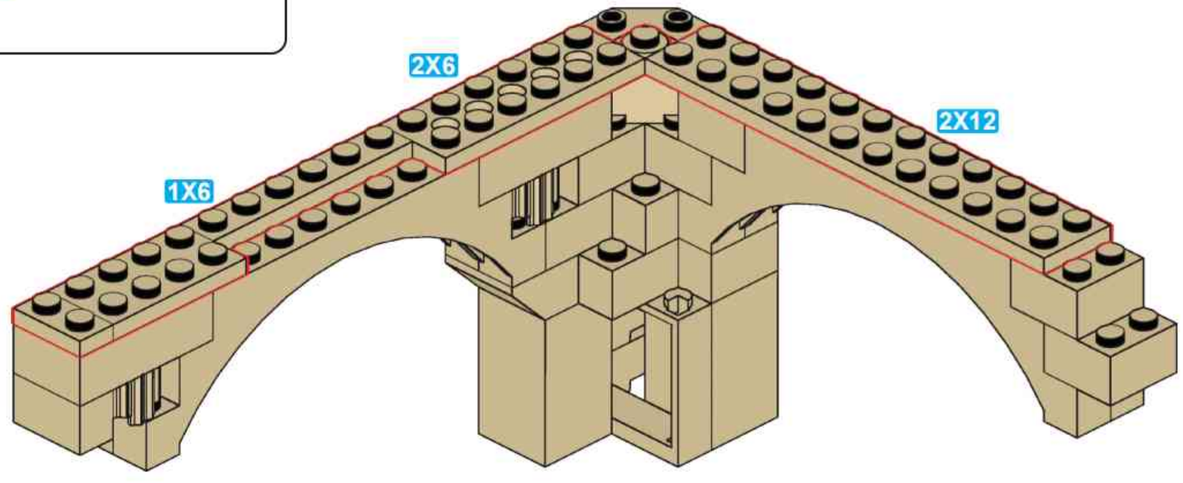

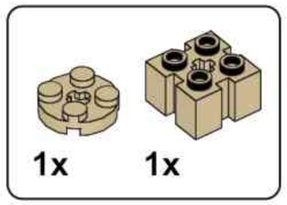

Q20

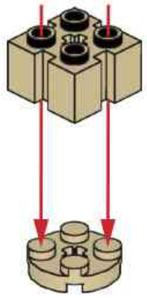

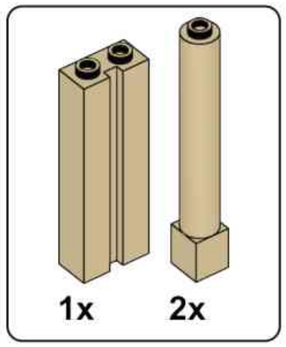

Q21

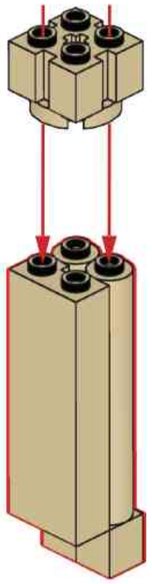

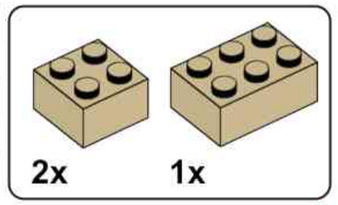

Q22

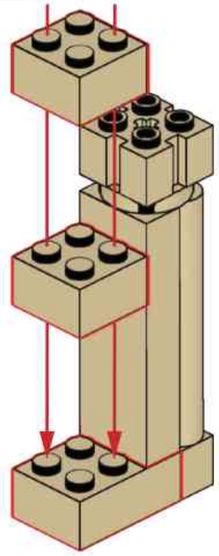

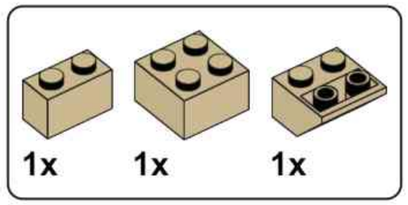

Q23

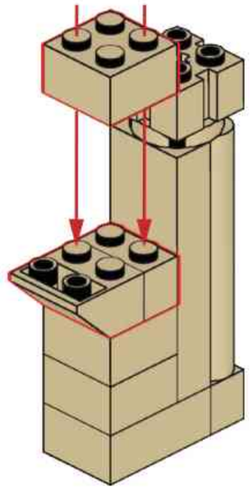

Q24

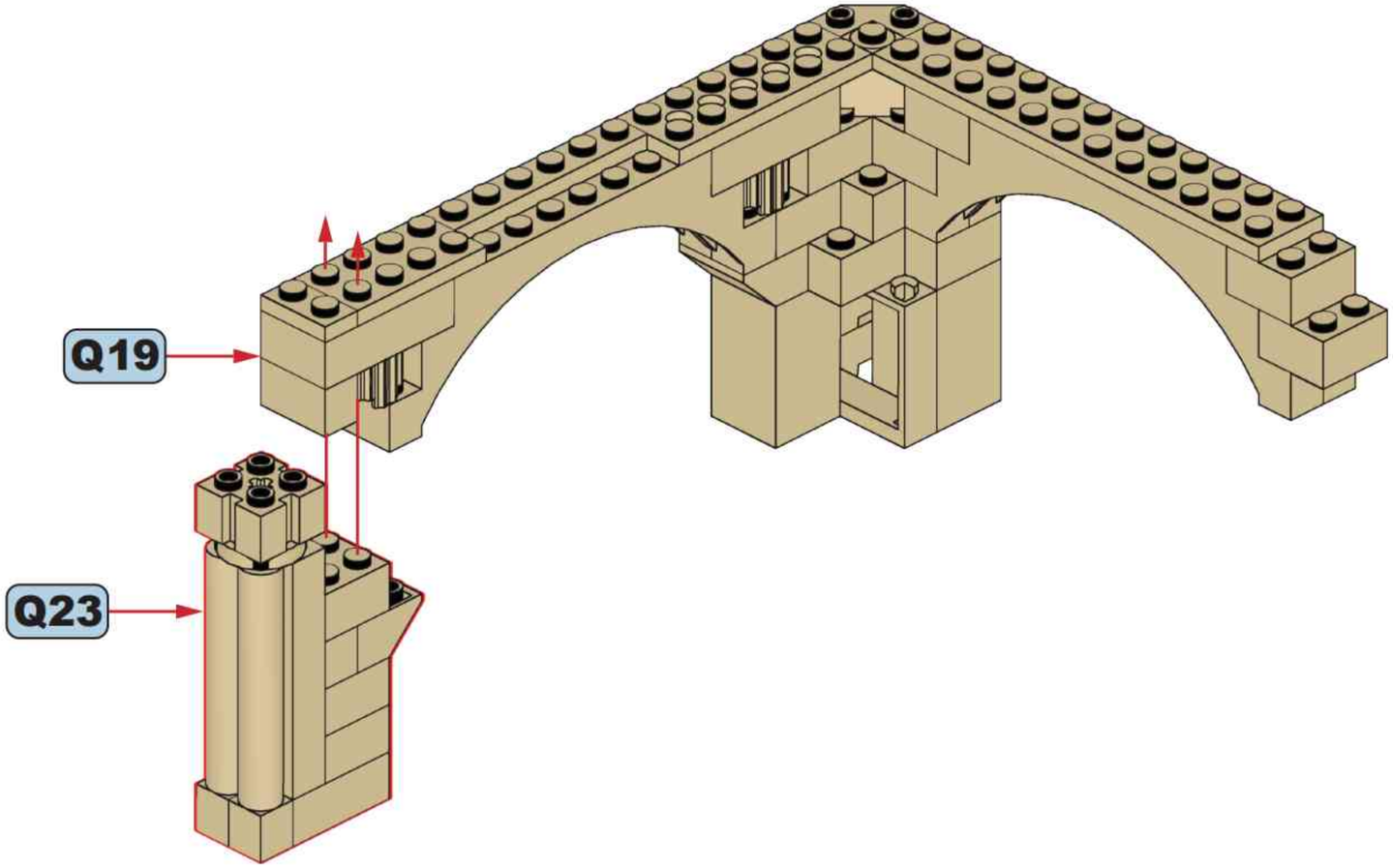

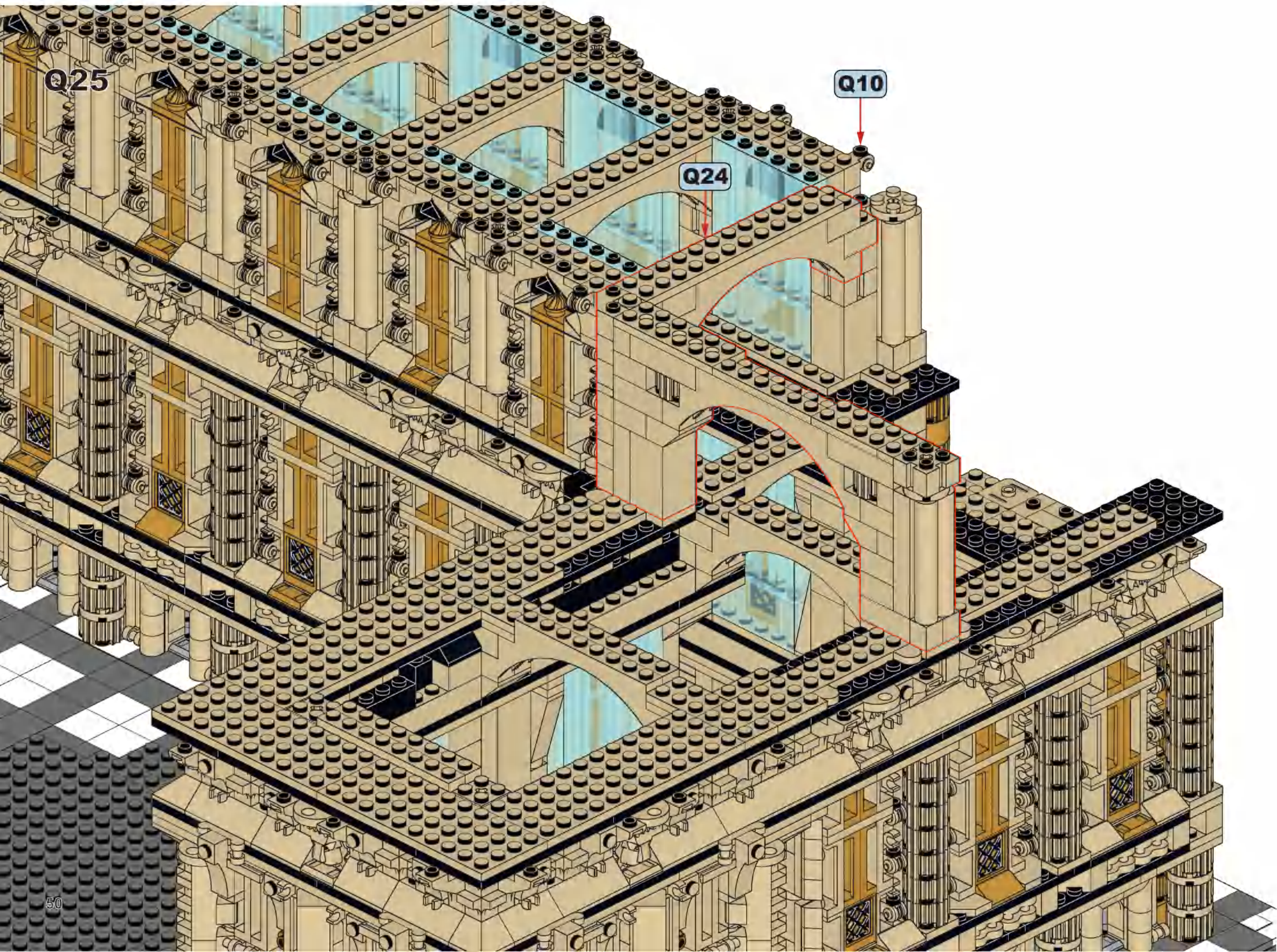
Q25
Q10
Q24

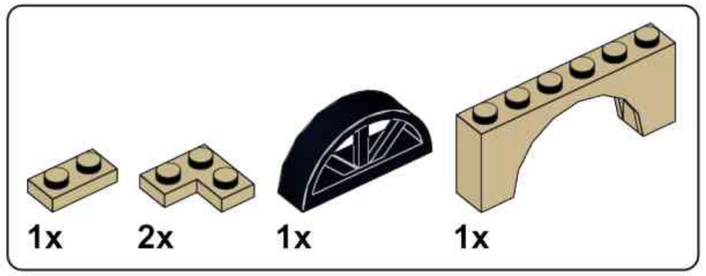

Q26

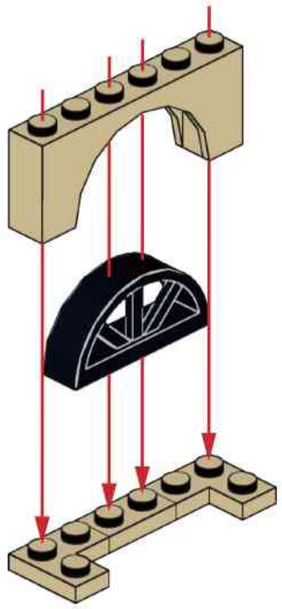

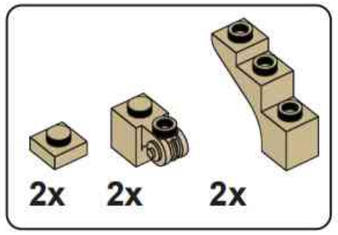

Q27

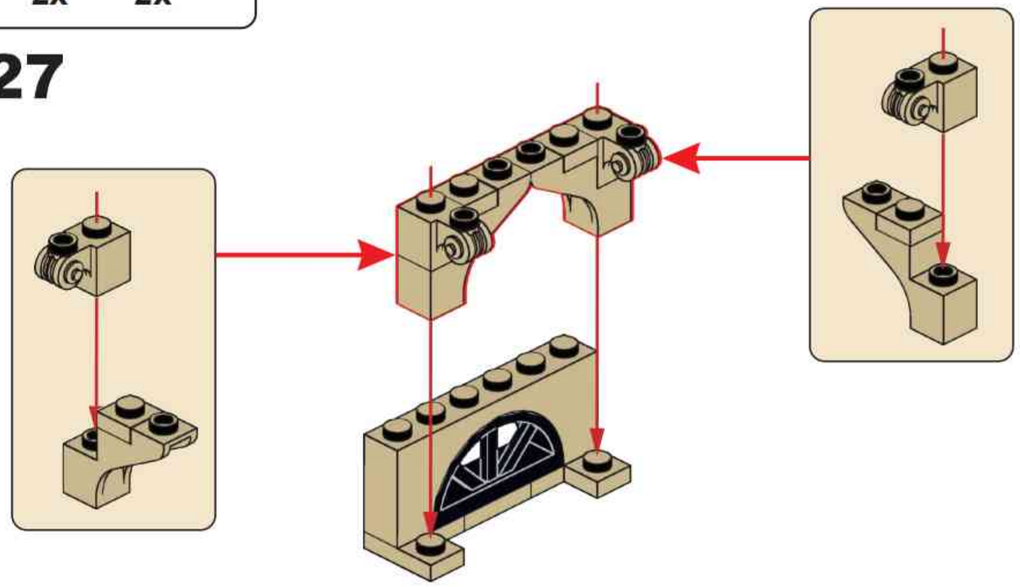

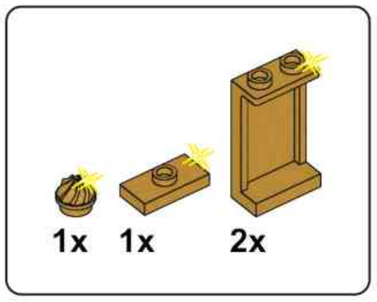

Q28

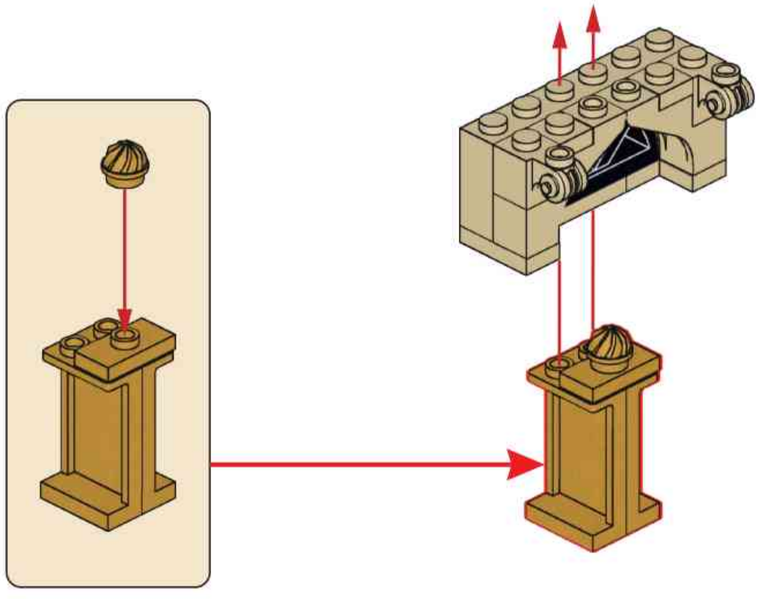

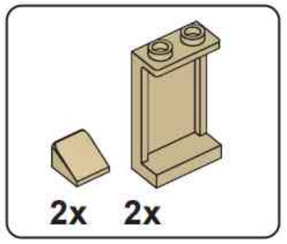

Q29

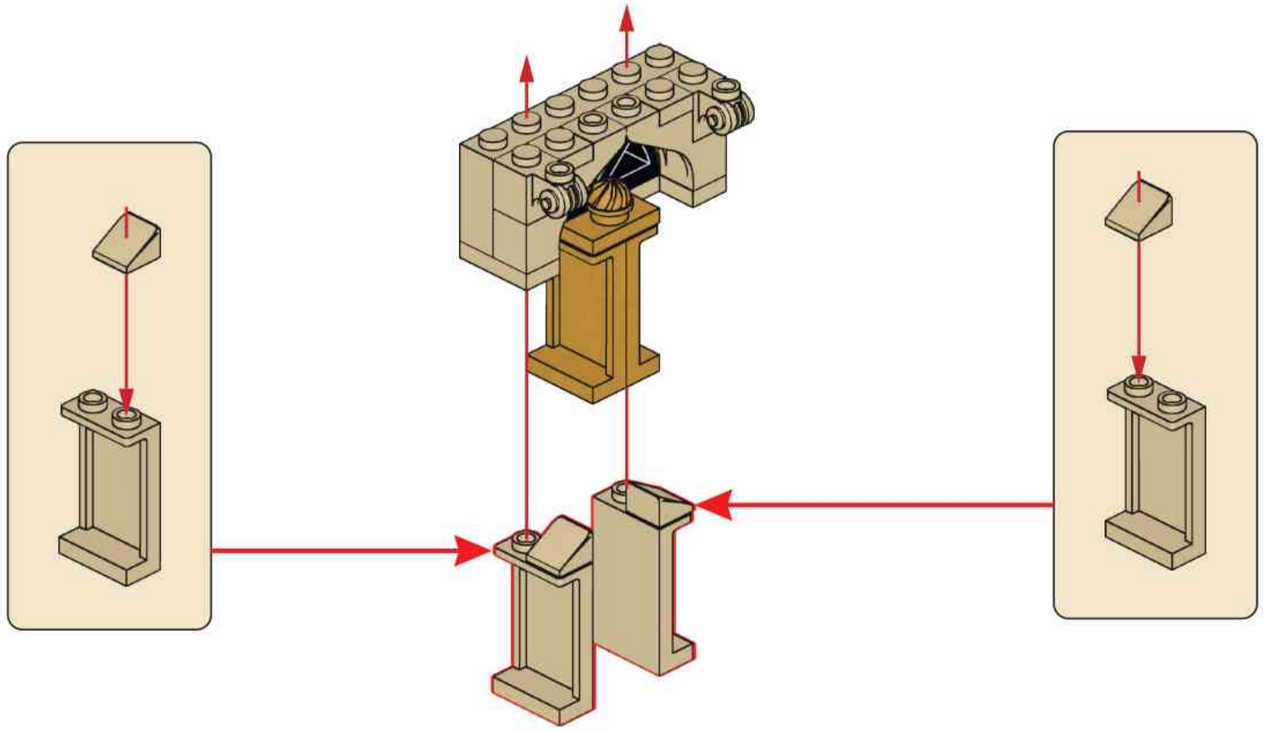

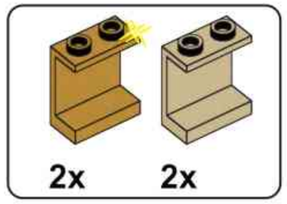

Q30

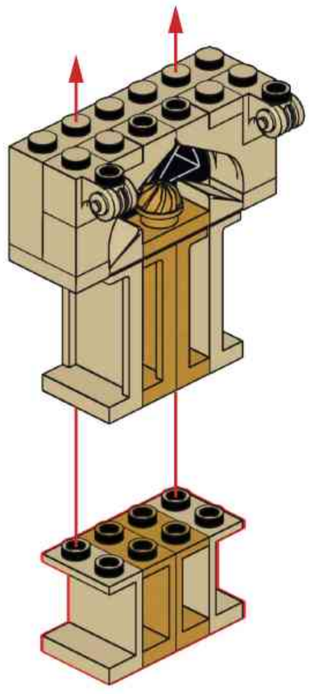

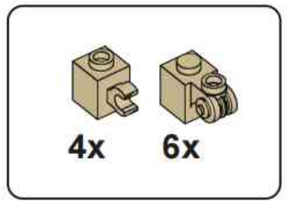

Q31

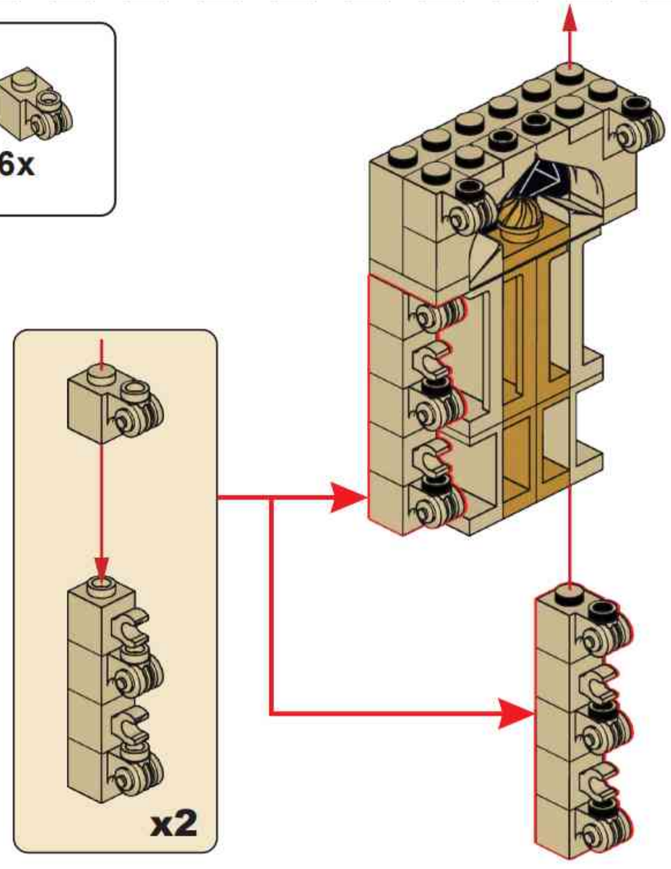

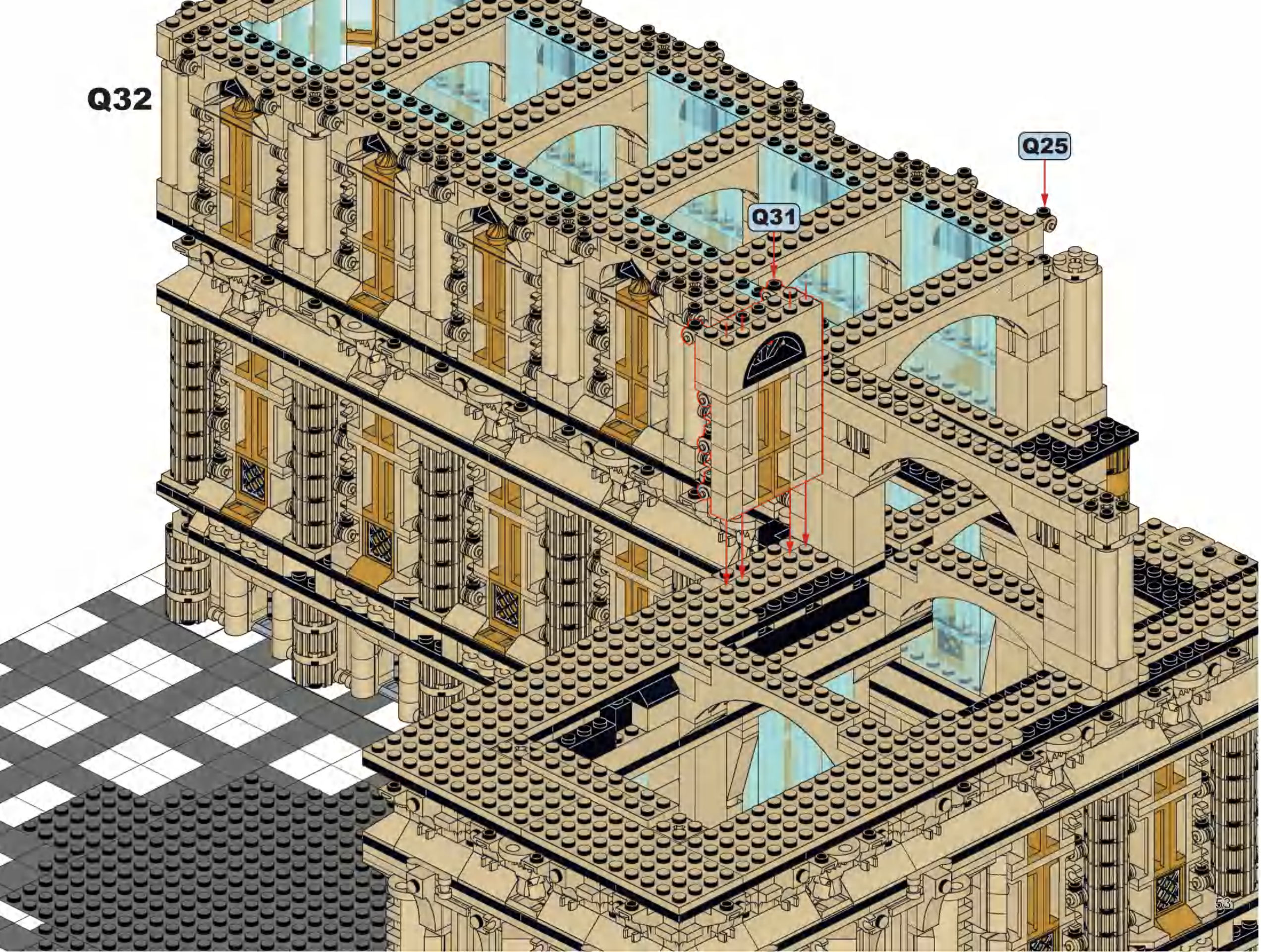
Q32
Q25
Q31

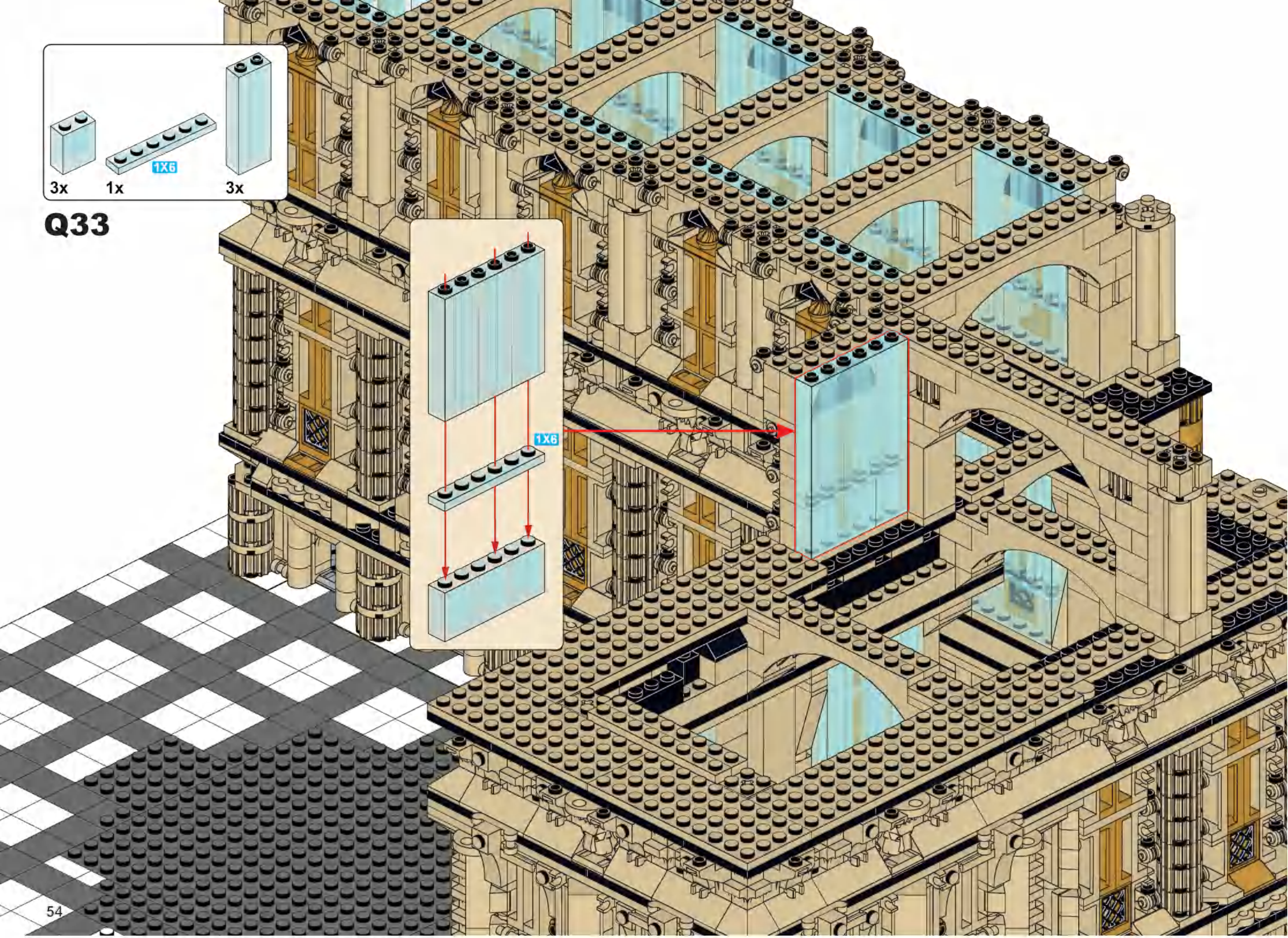
3x
1x
1X6
3x
Q33
1X6

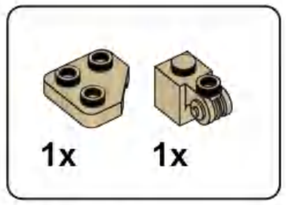

Q34

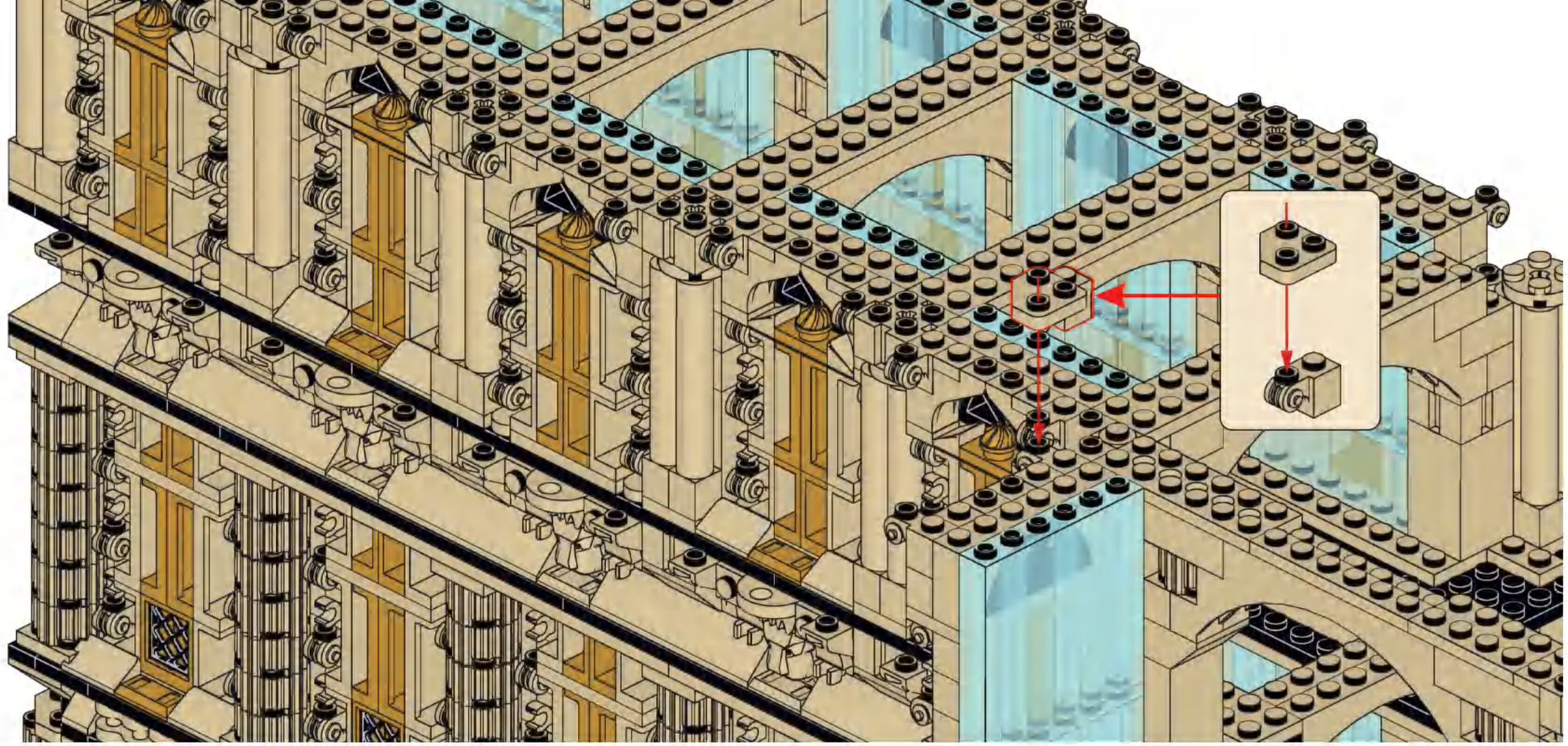

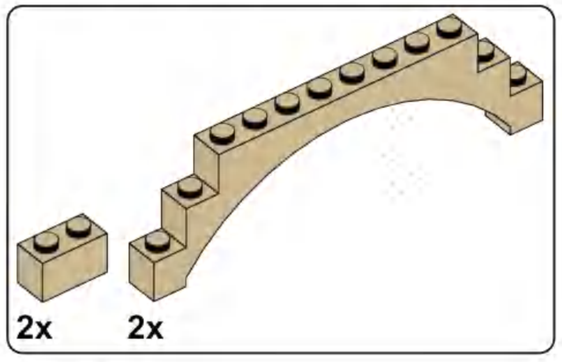

Q35

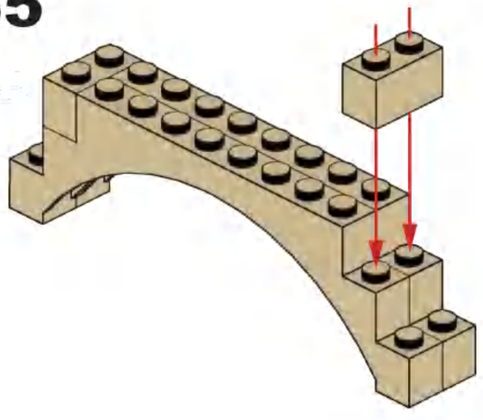

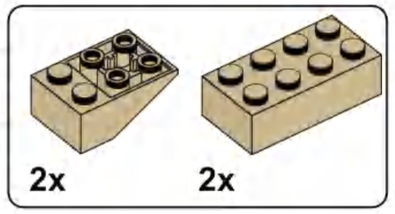

Q36

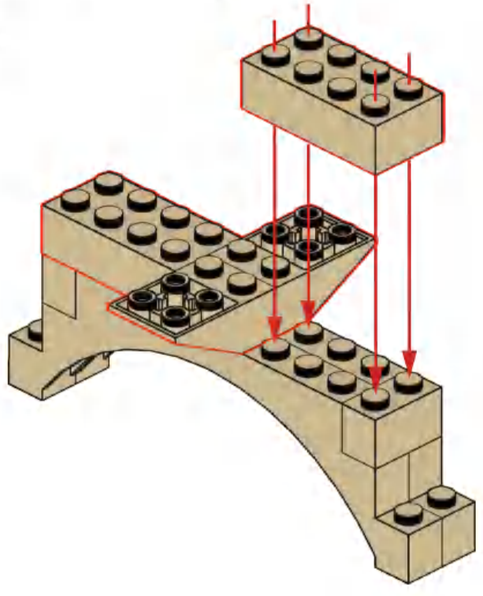

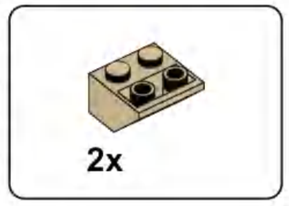

Q37

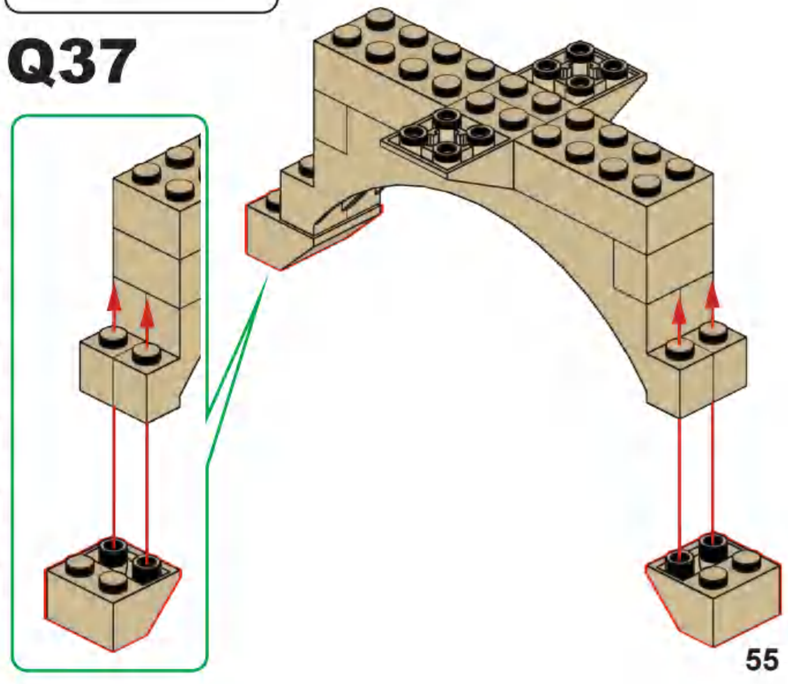

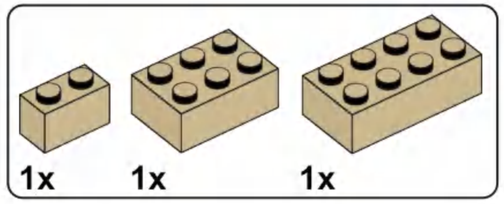

Q38

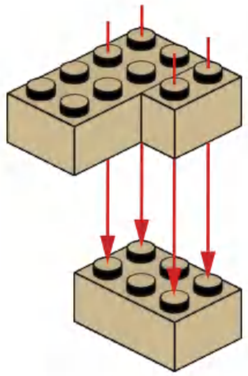

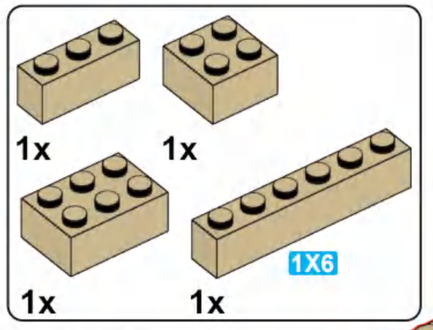

Q39

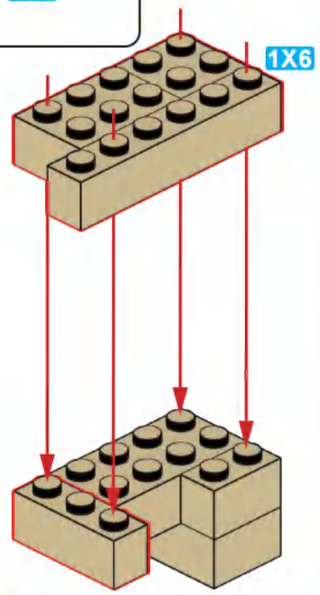

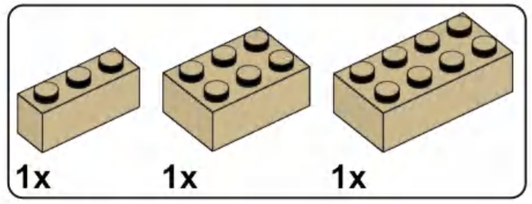

Q40

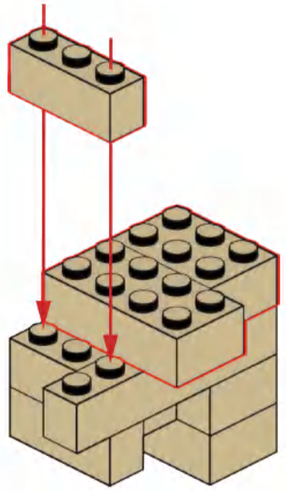

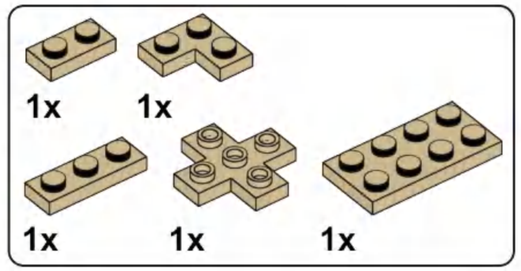

AQ41

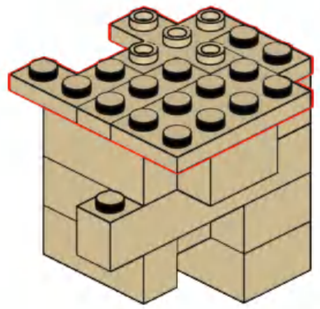

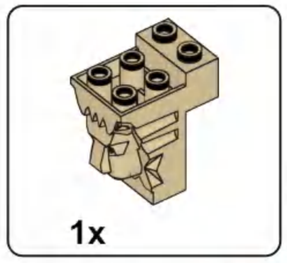

Q42

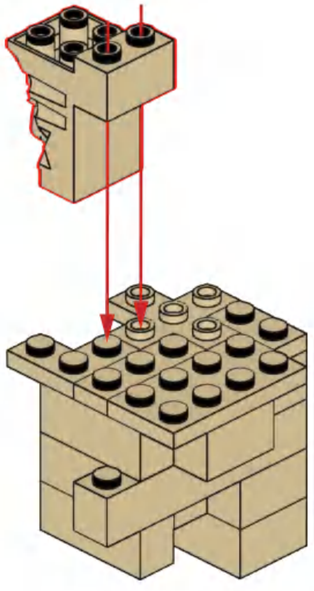

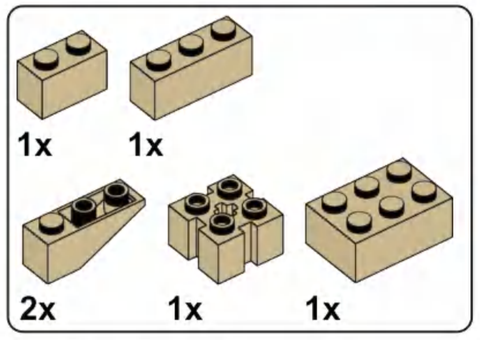

Q43

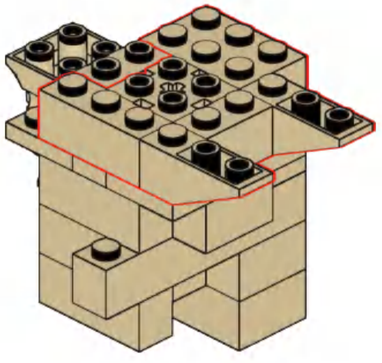

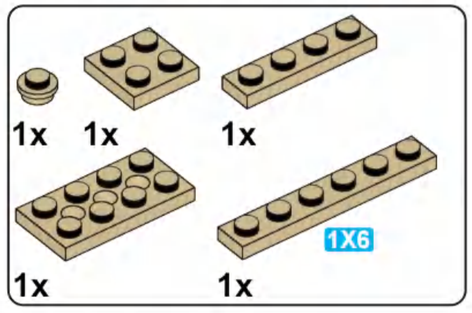

Q44

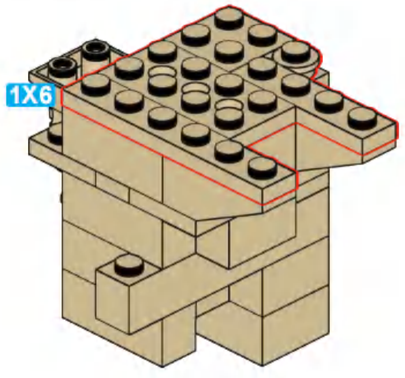

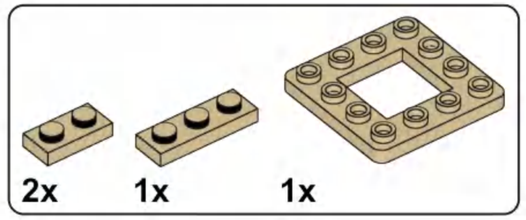

Q45

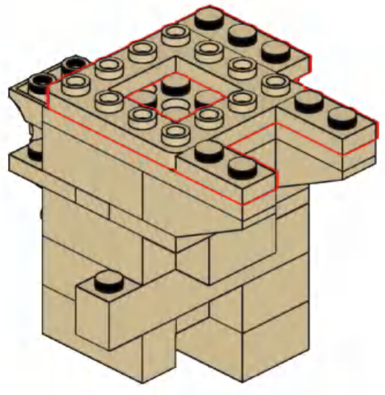

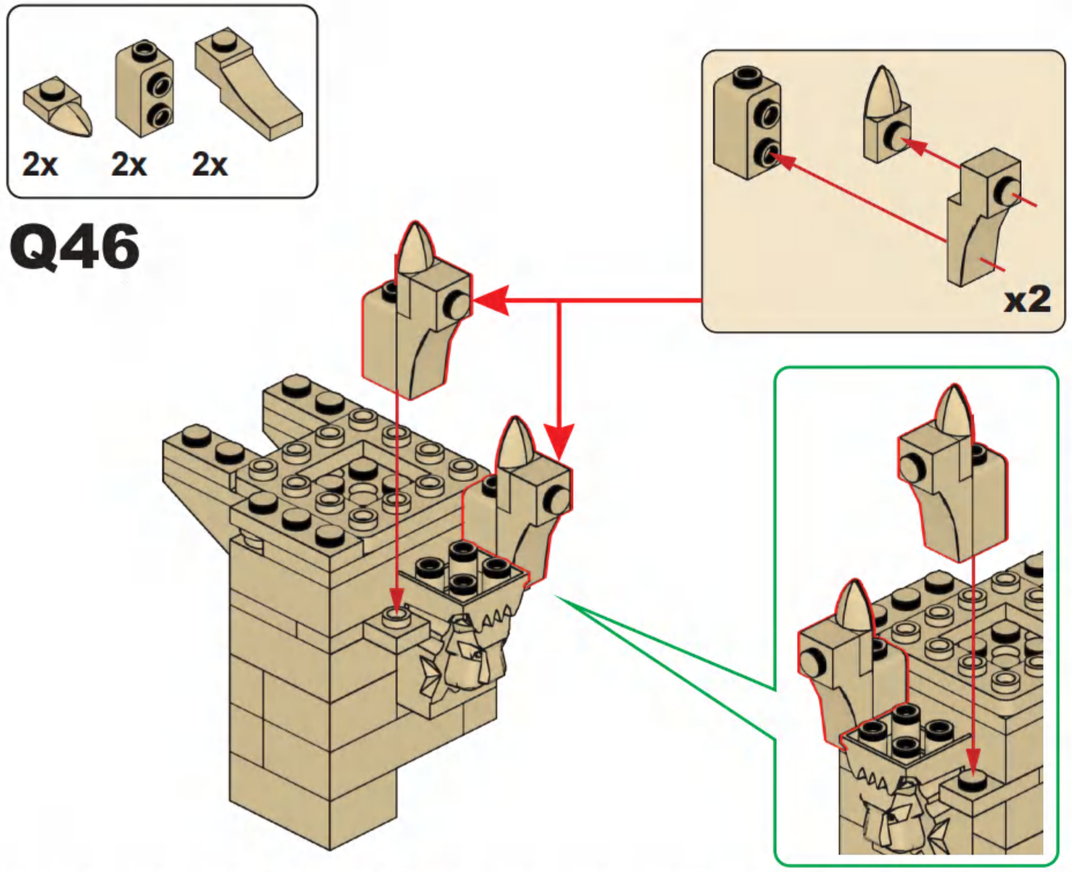

Q46

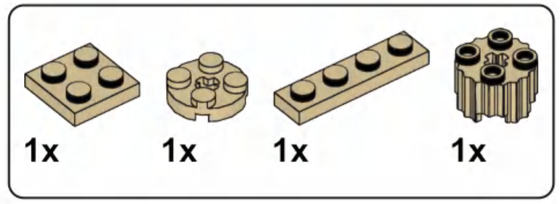

Q47

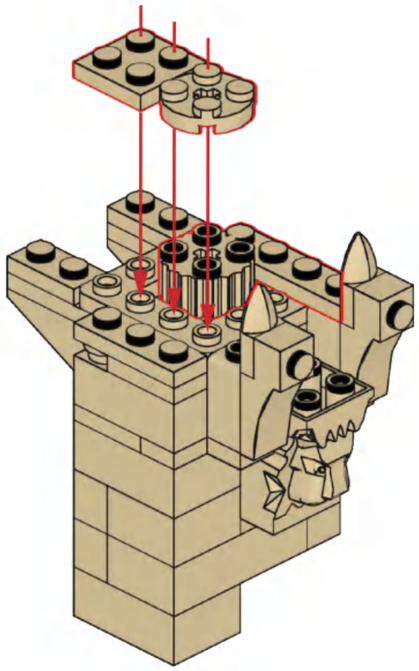

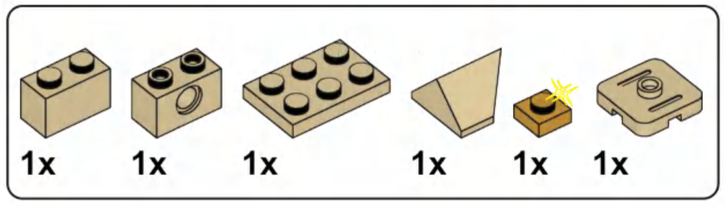

Q48

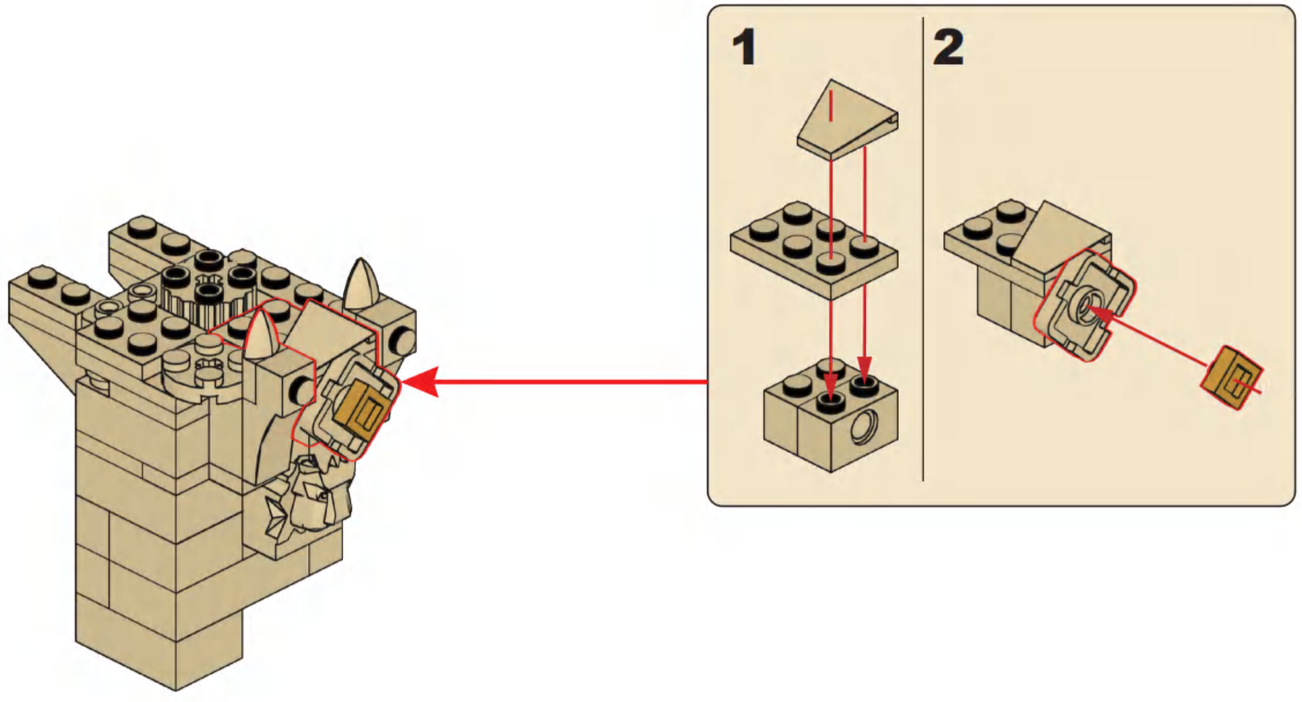

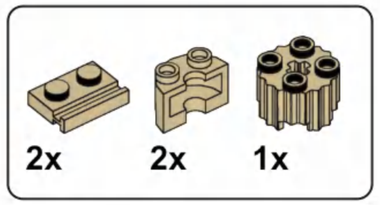

Q49

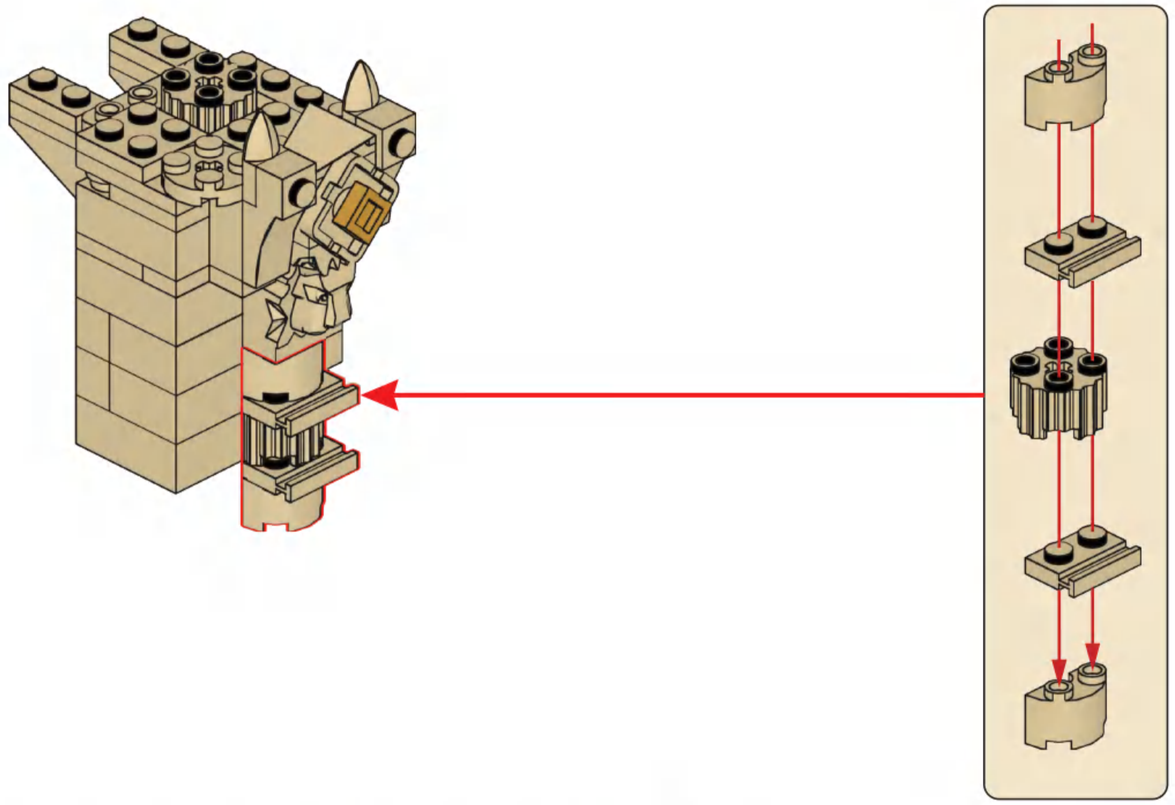

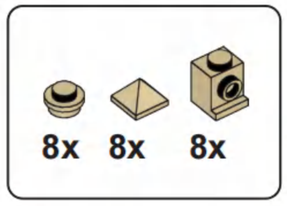

Q50

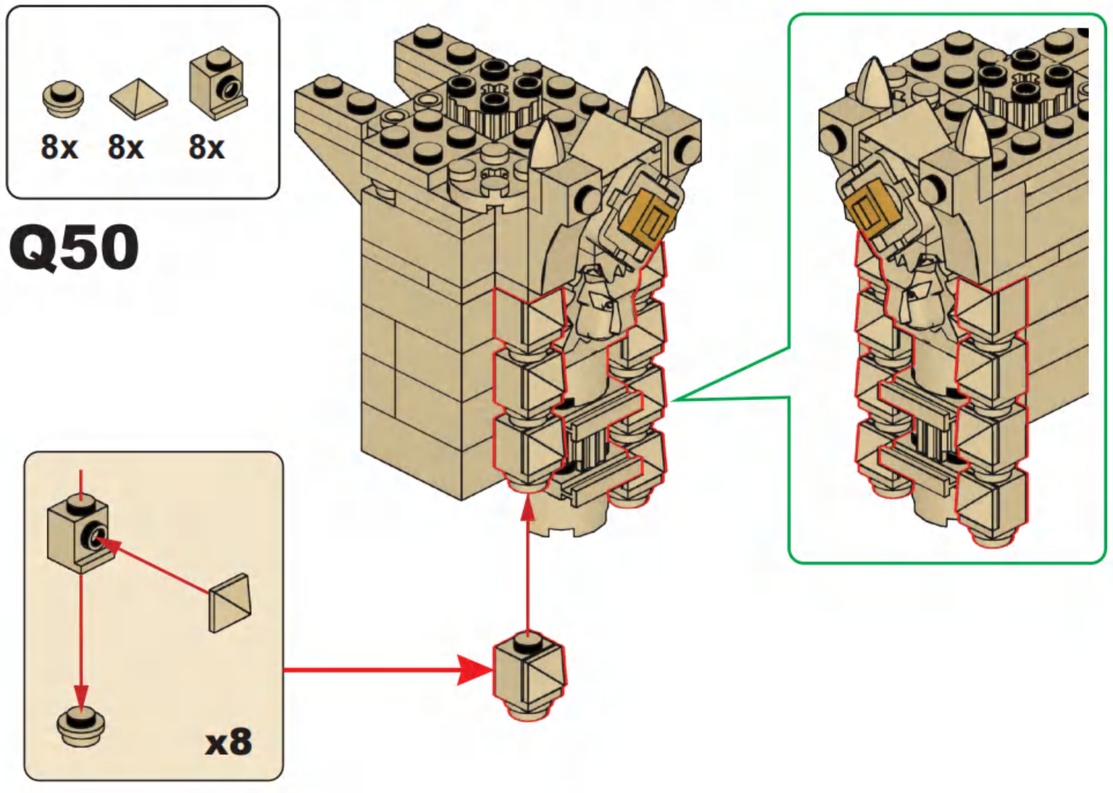

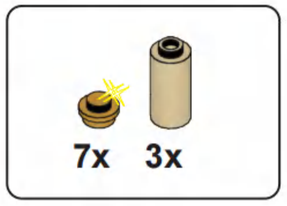

Q51

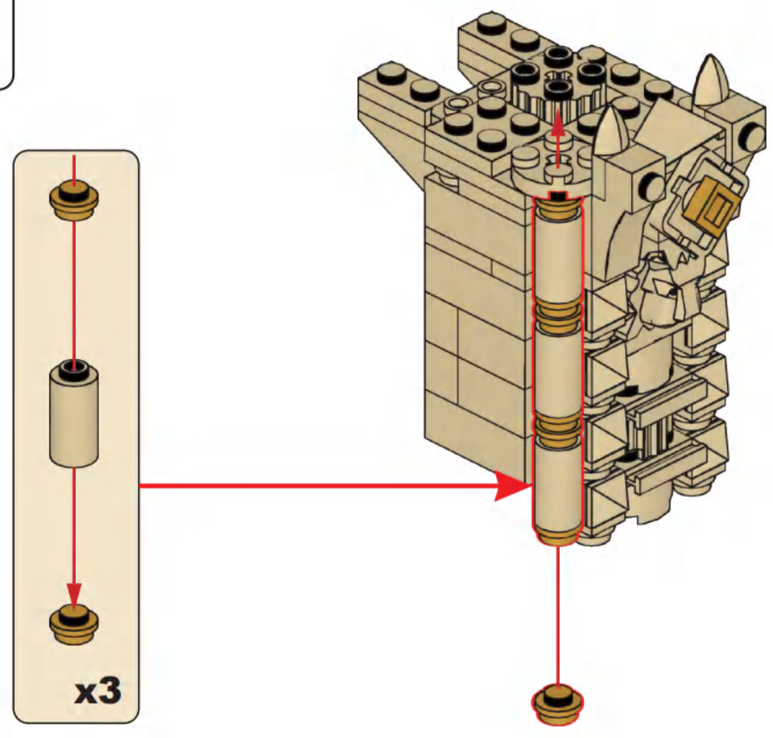

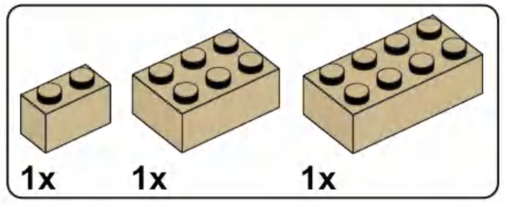

Q52

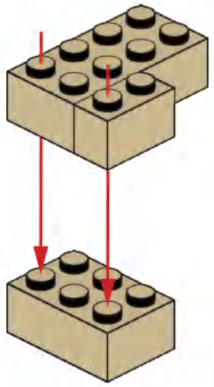

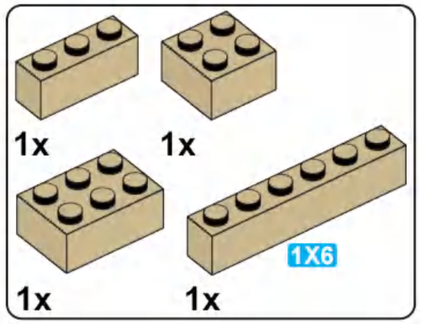

Q53

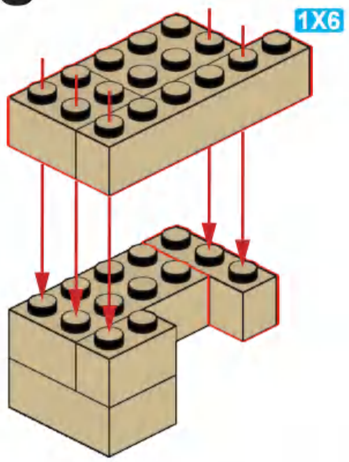

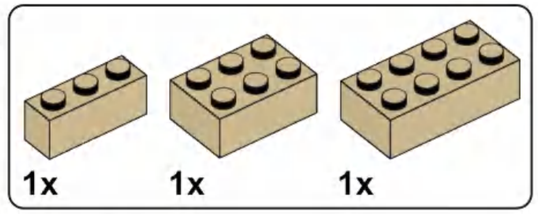

Q54

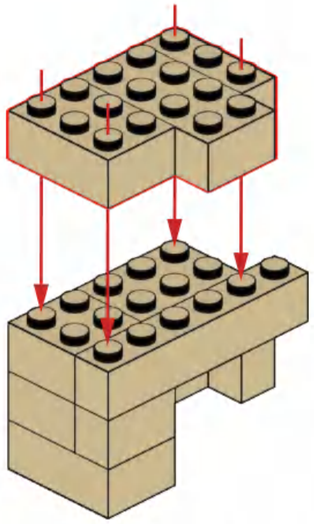

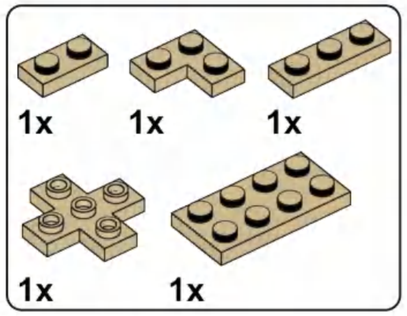

Q55

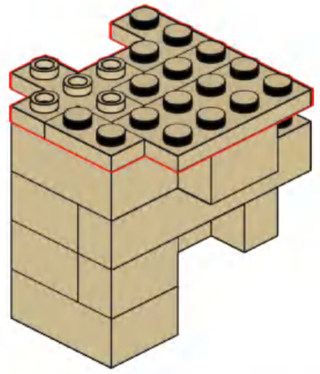

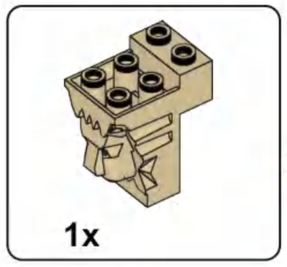

Q56

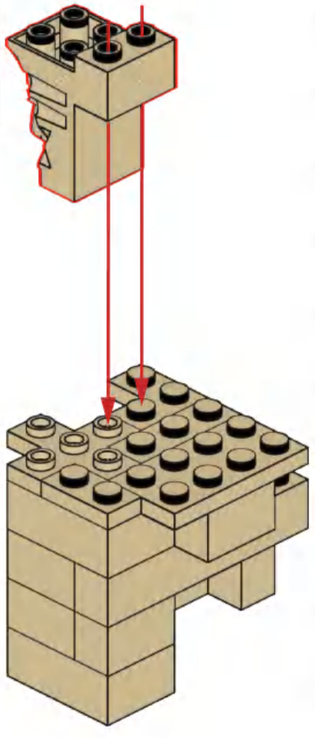

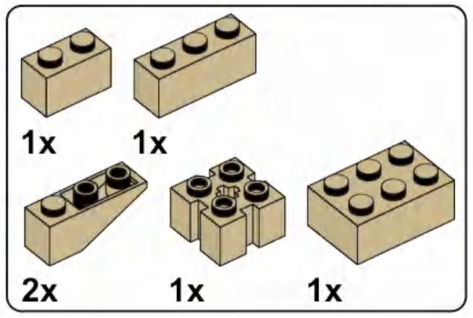

Q57

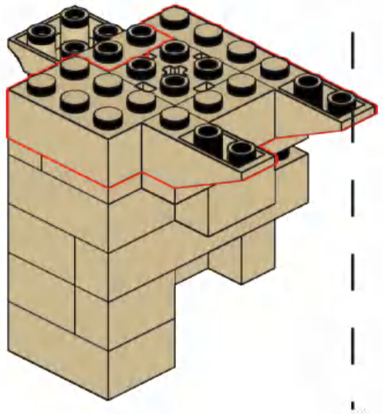

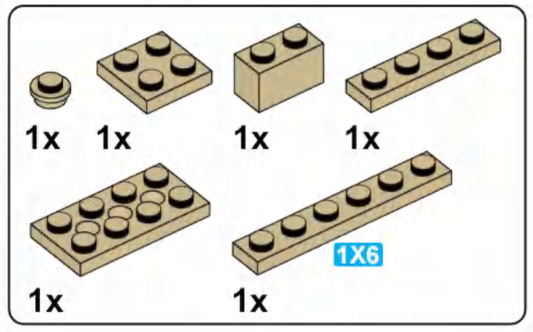

Q58

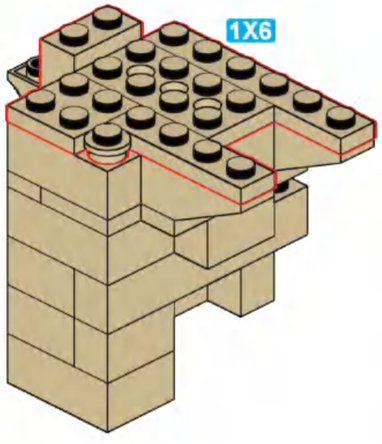

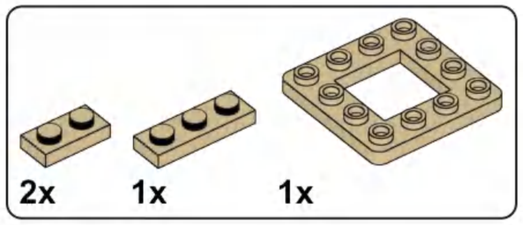

Q59

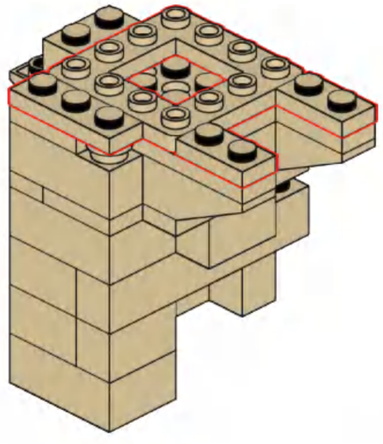

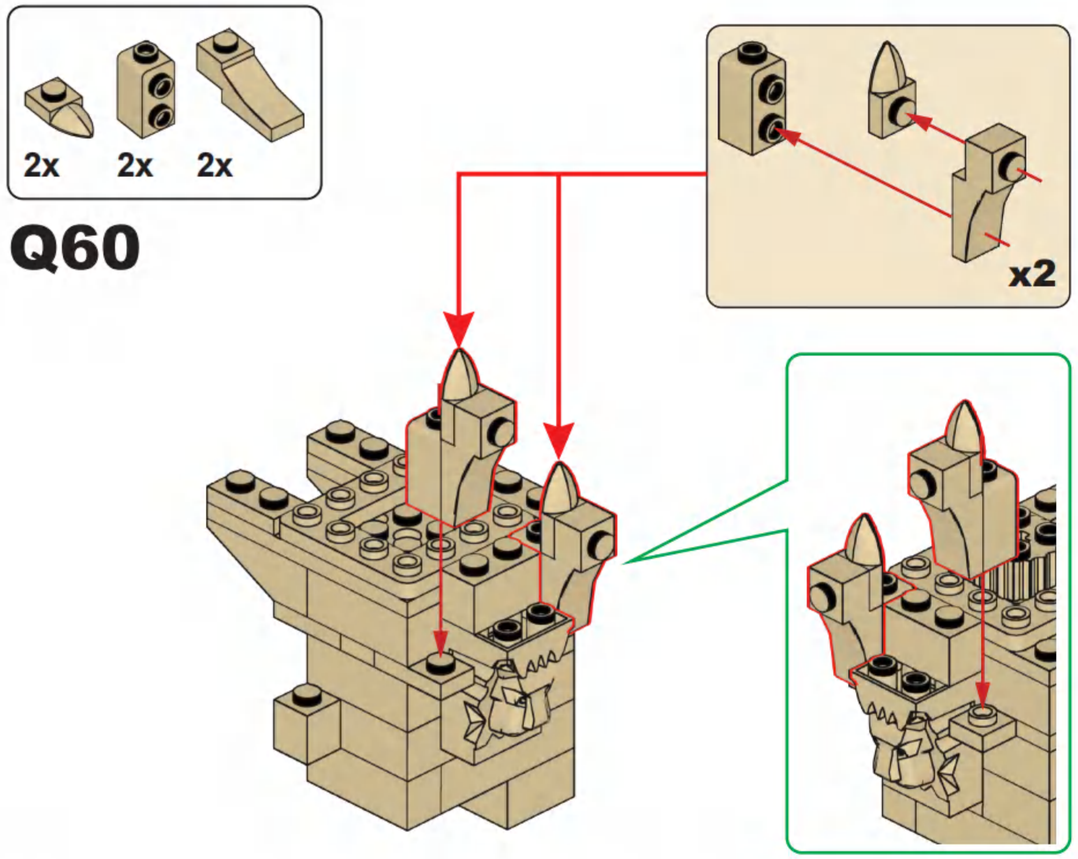

Q60

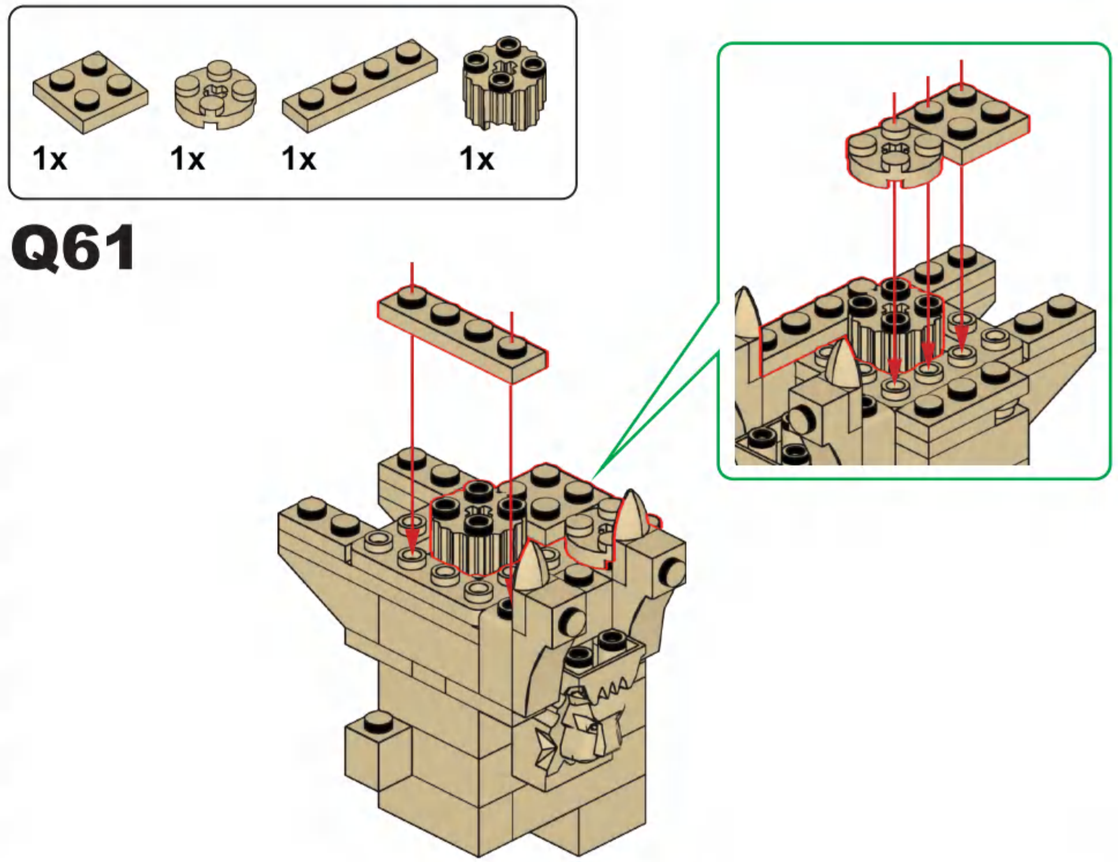

Q61

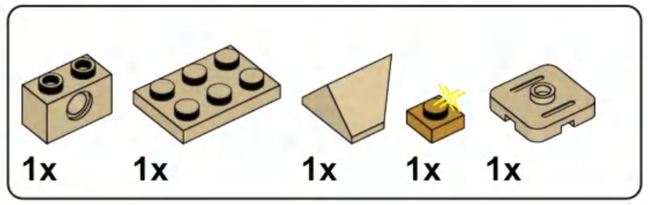

Q62

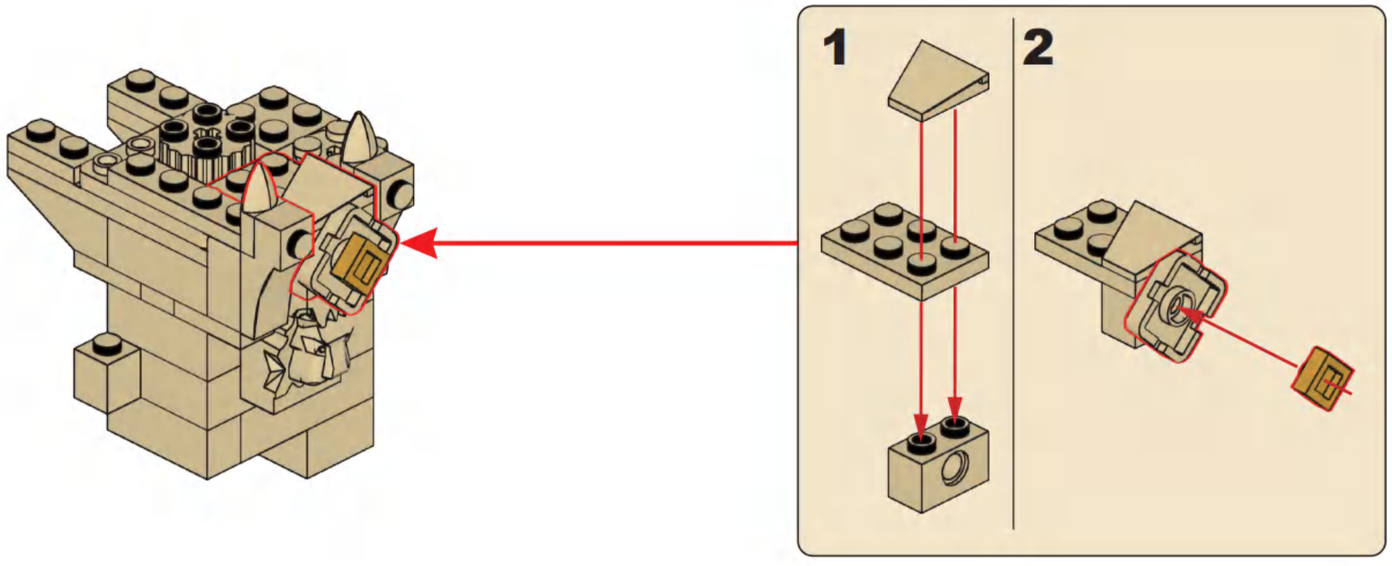

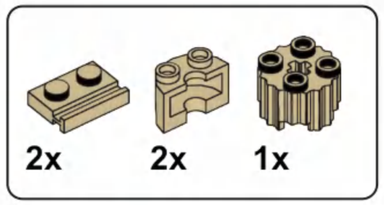

Q63

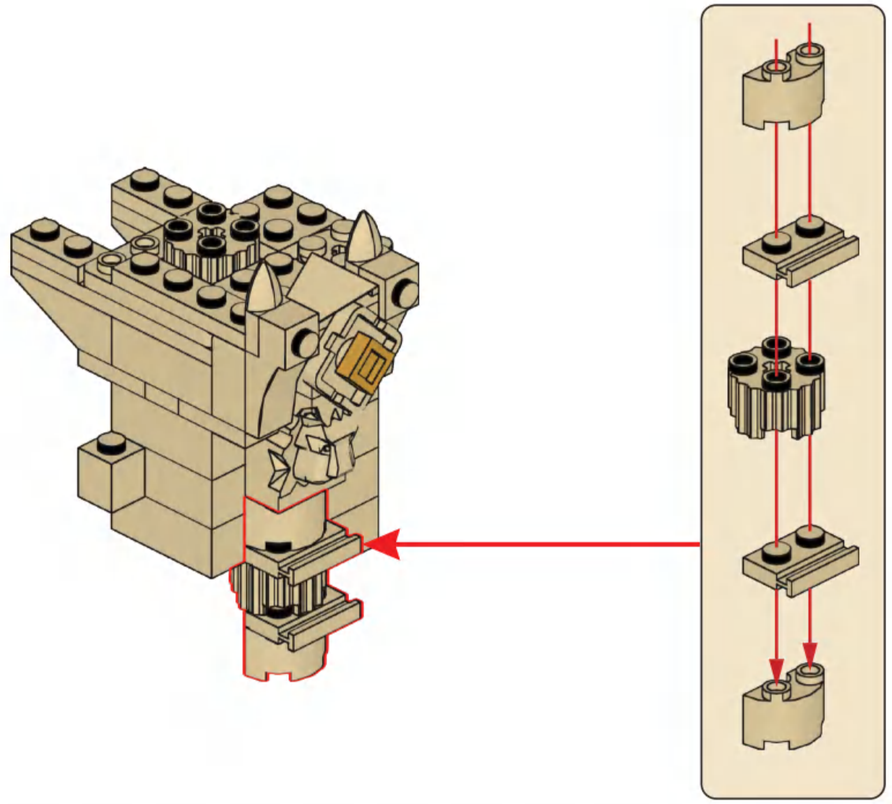

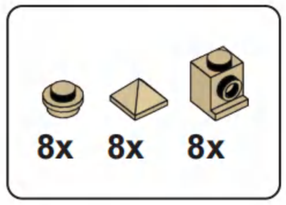

Q64

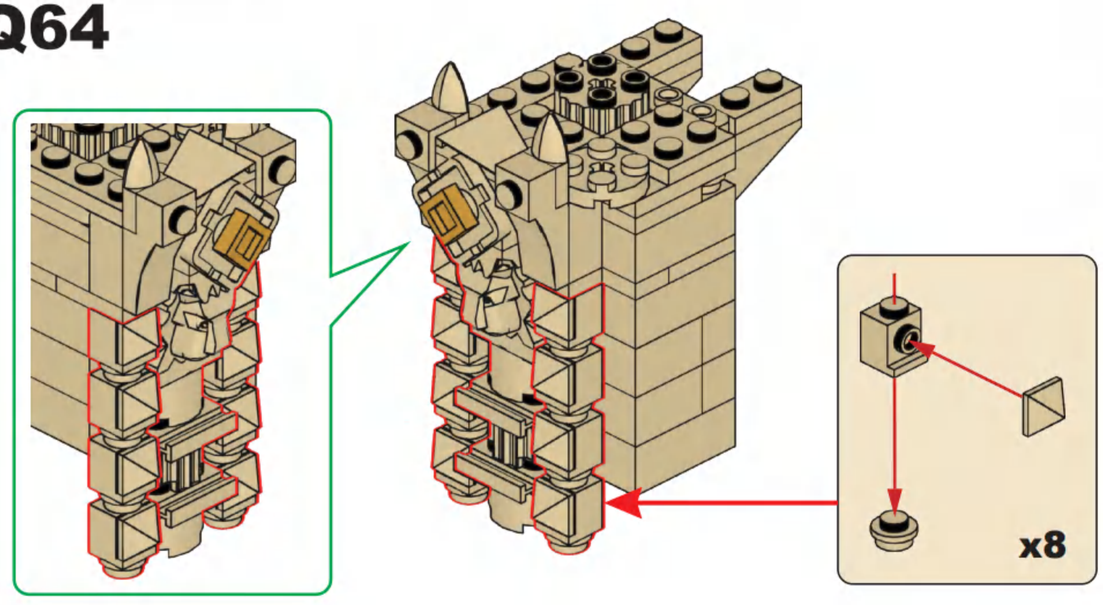

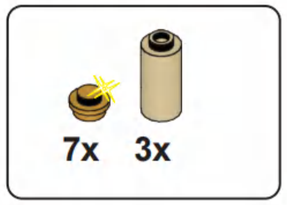

Q65

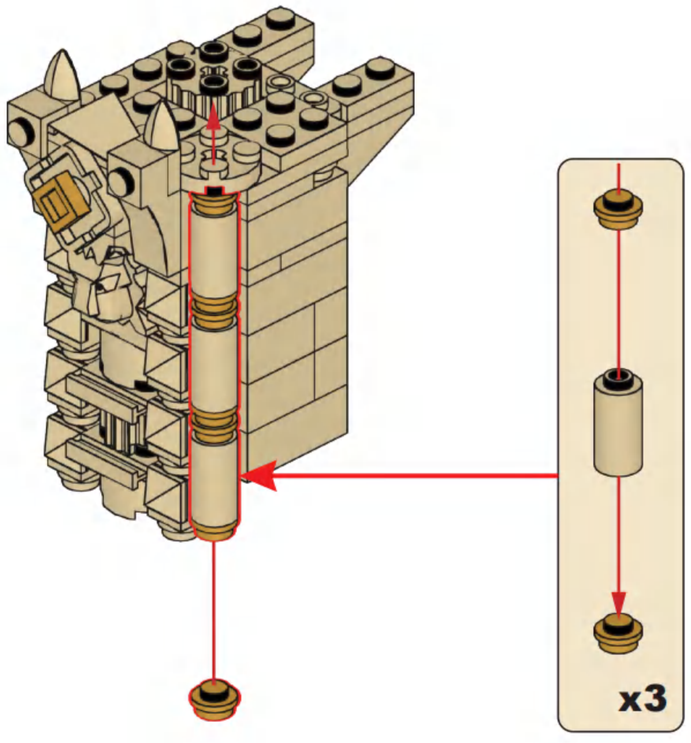

Q66

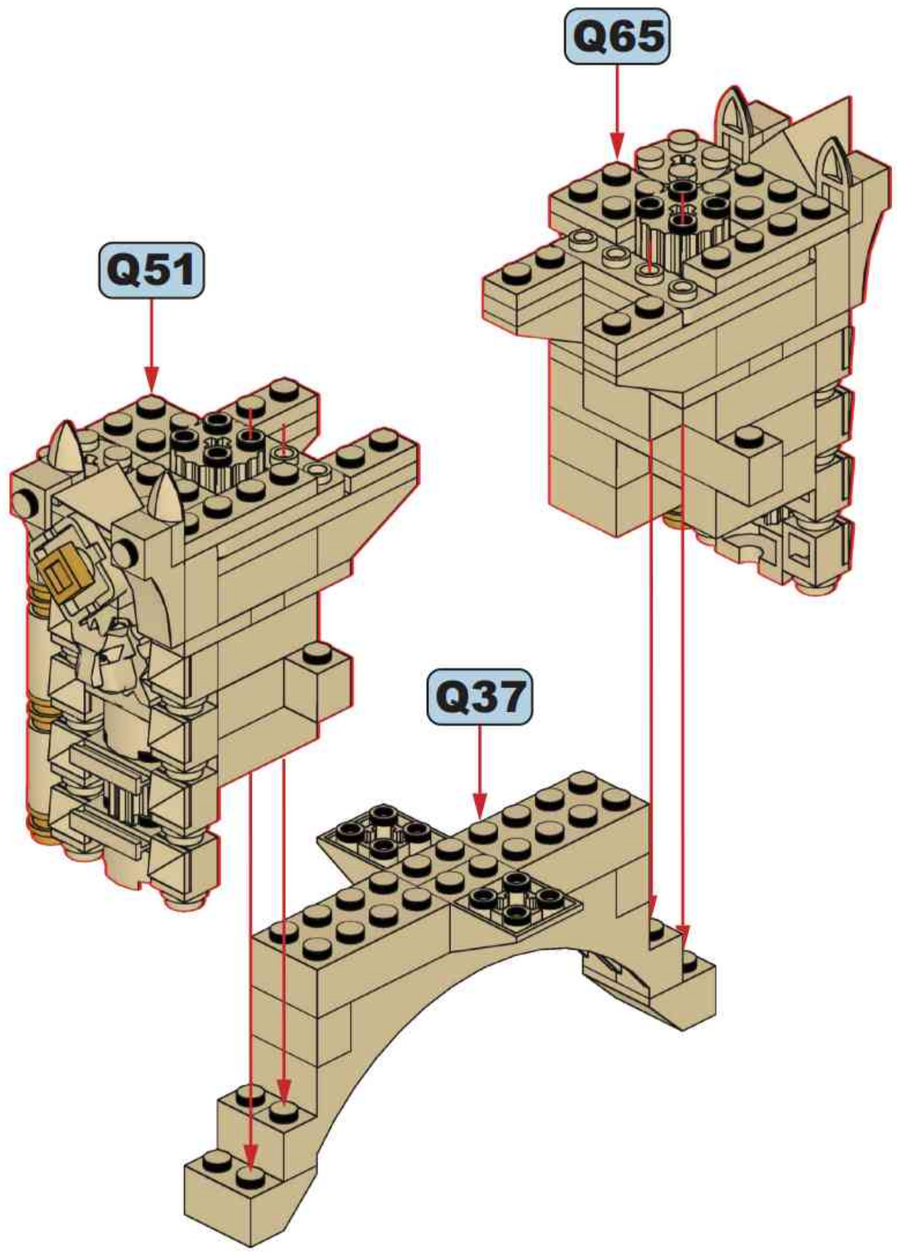

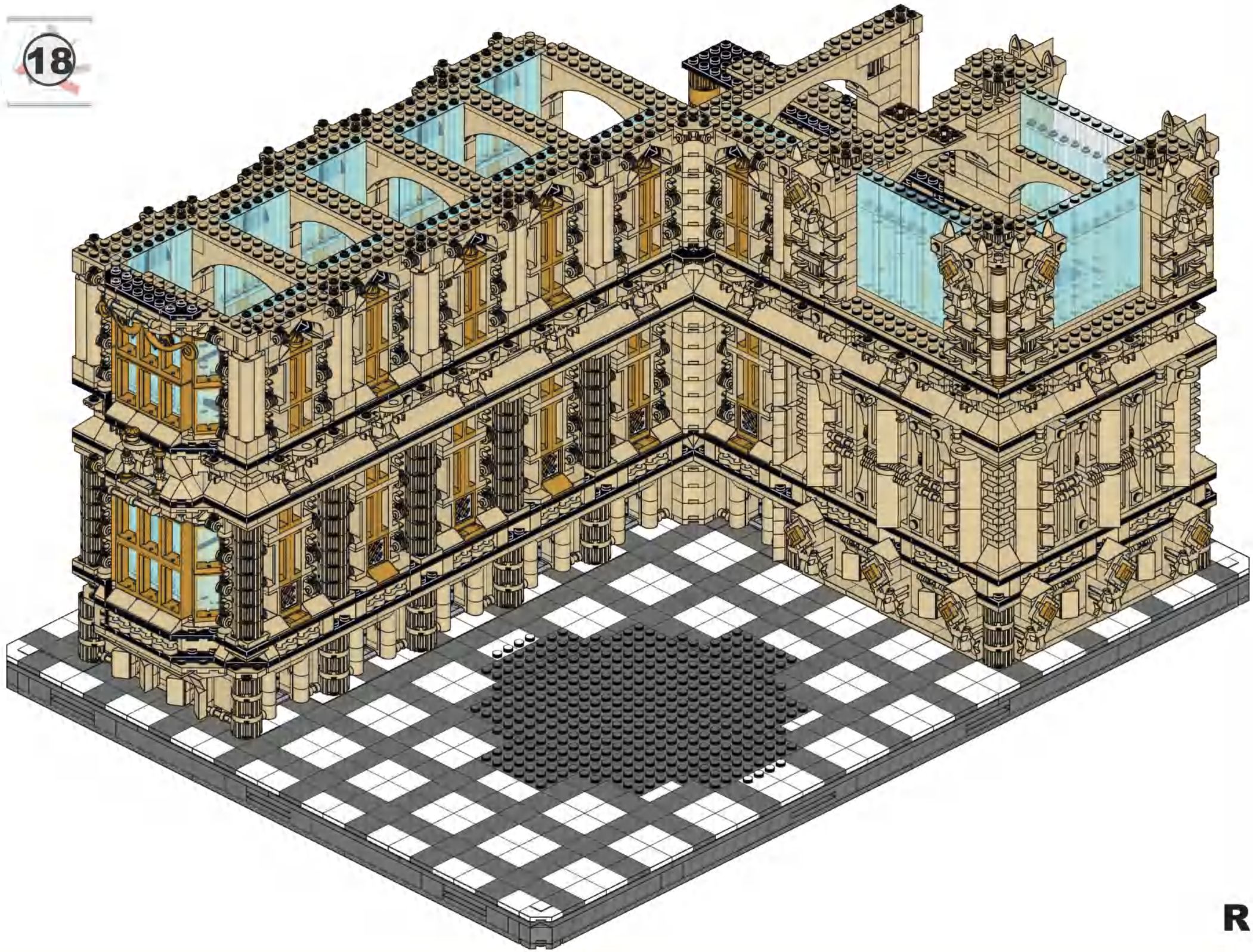
18
R

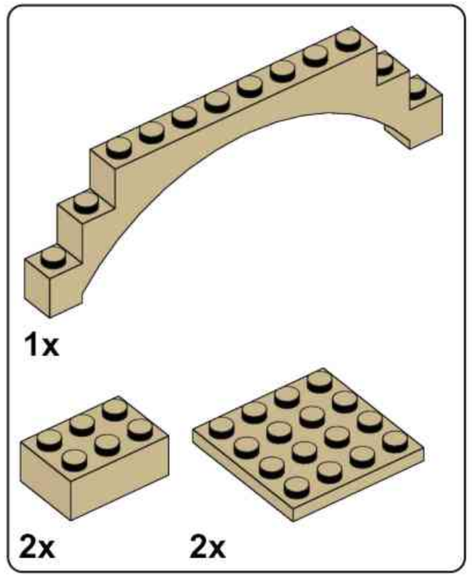

R1

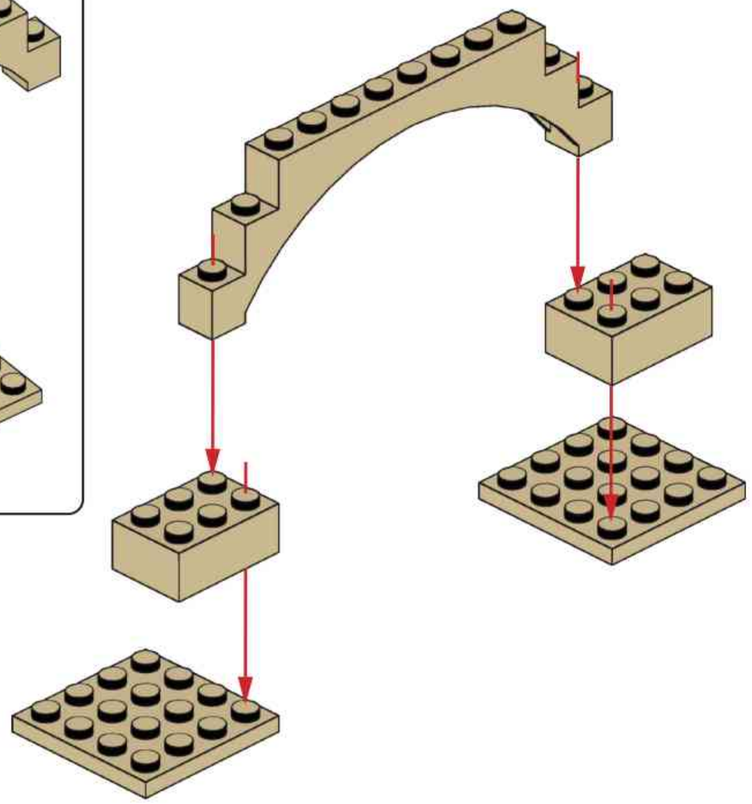

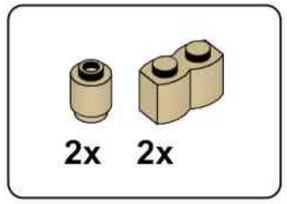

R2

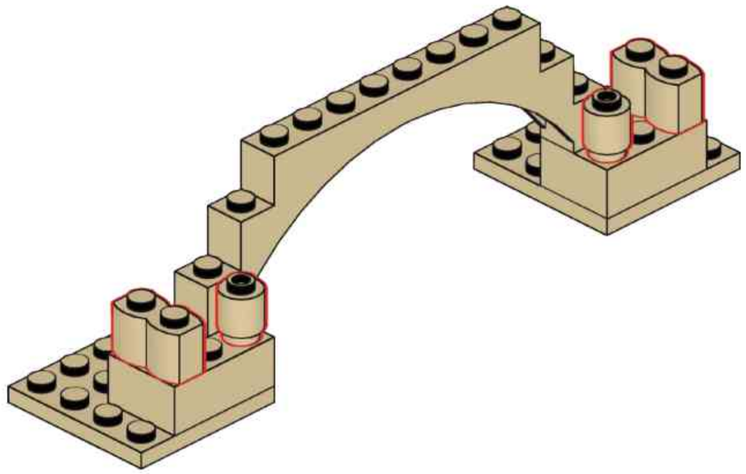

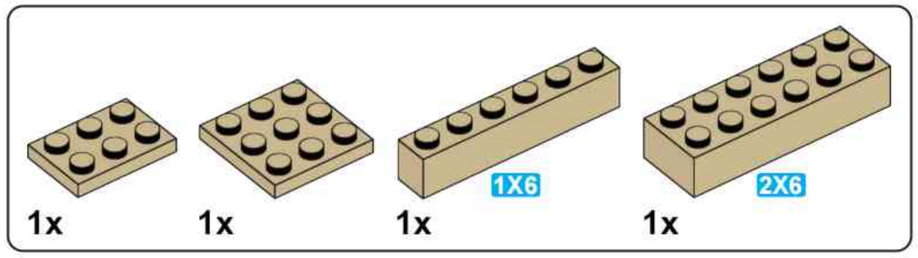

R3

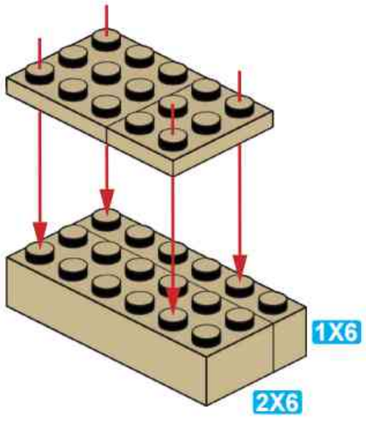

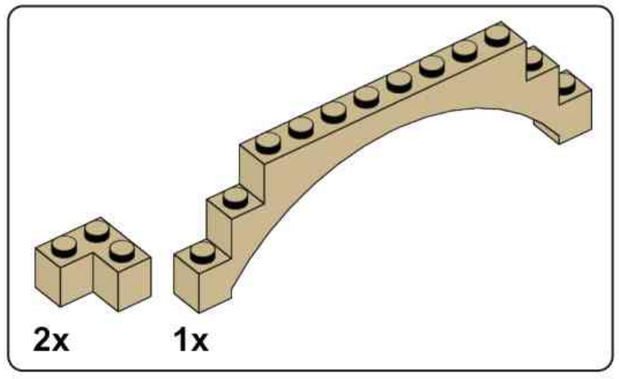

R4

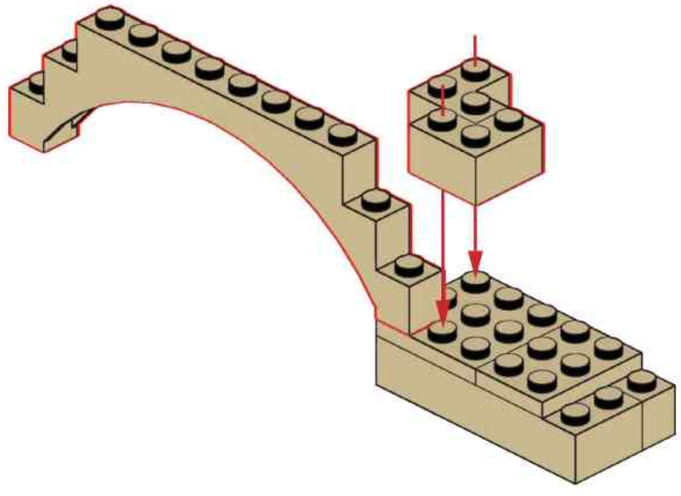

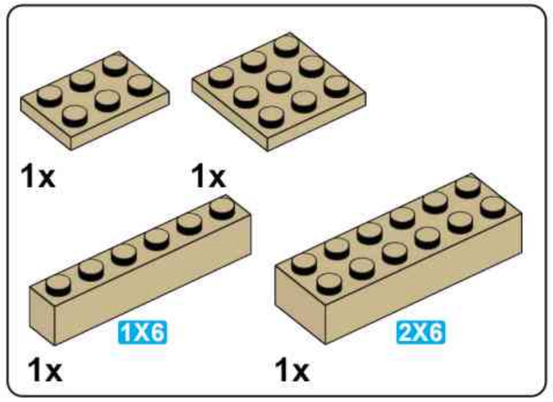

R5

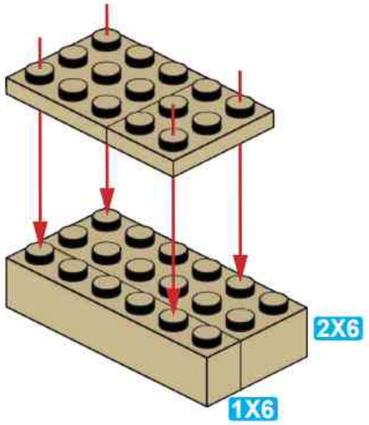

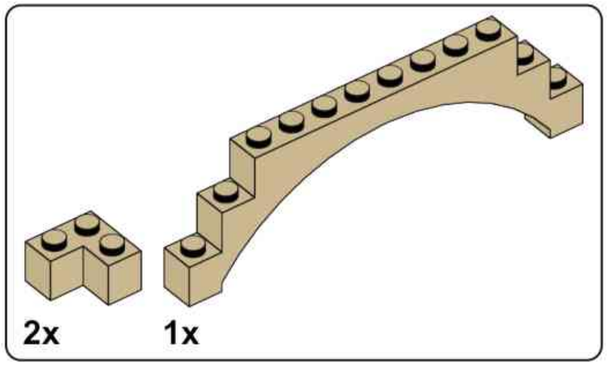

R6

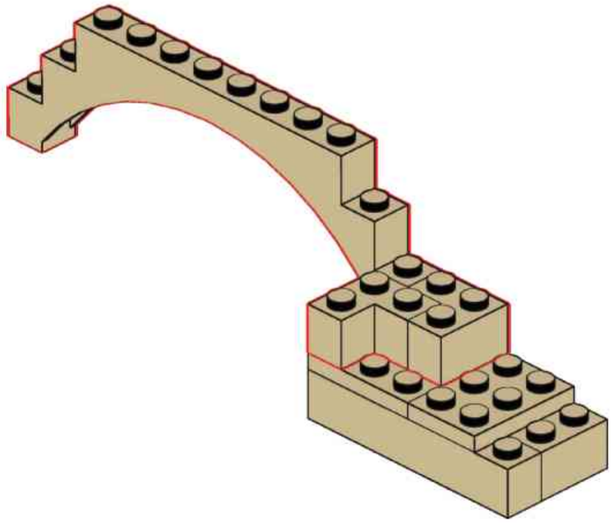

R7

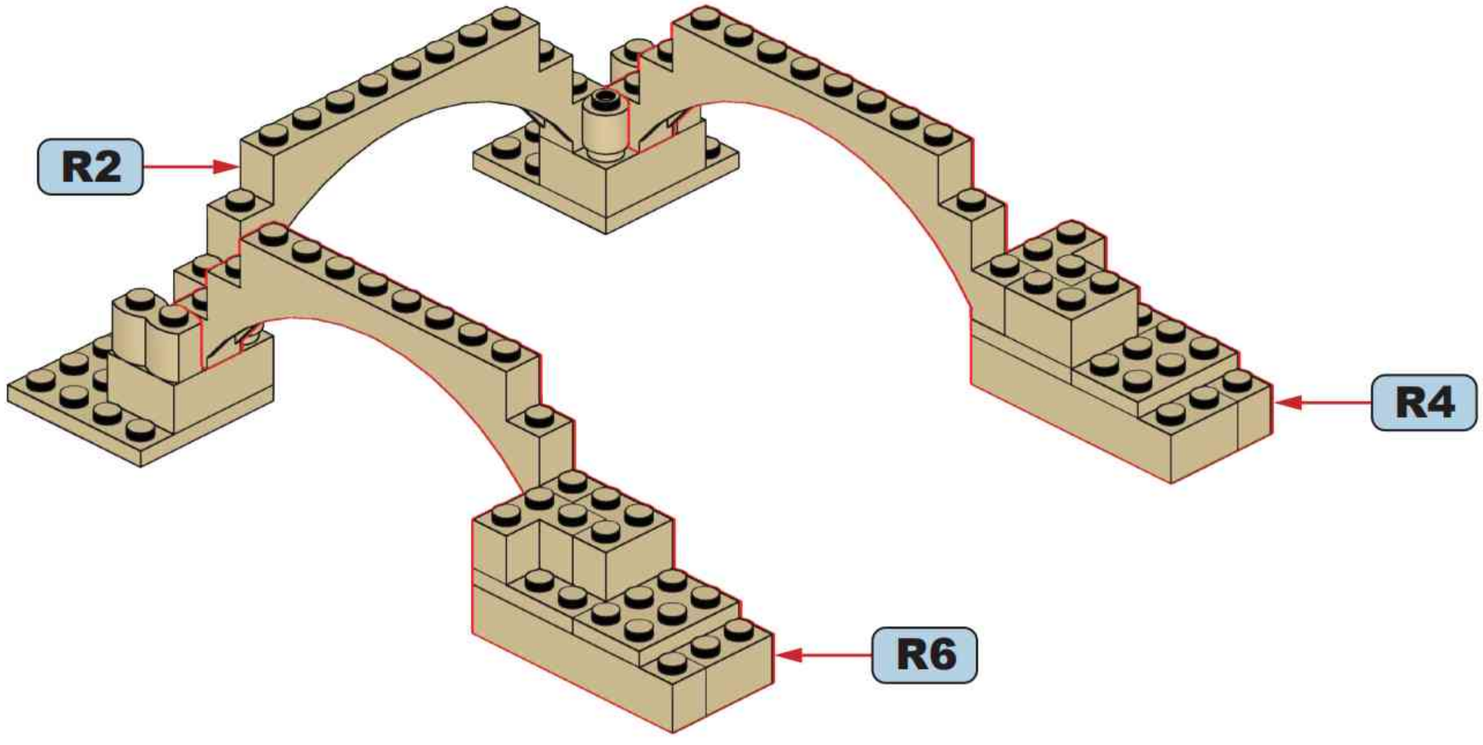

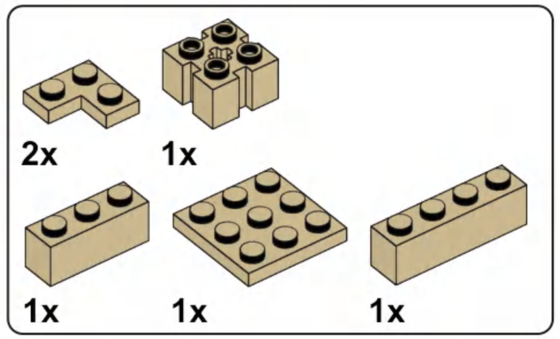

R8

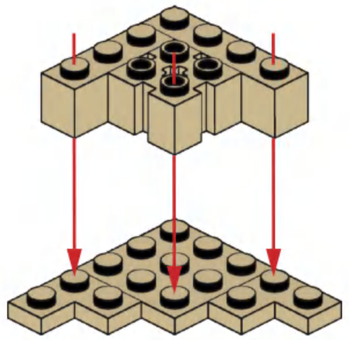

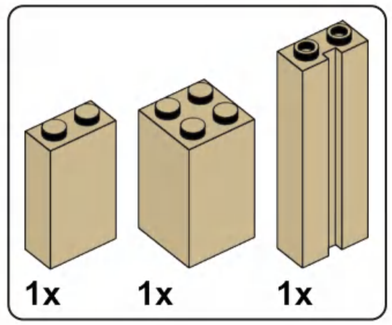

R9

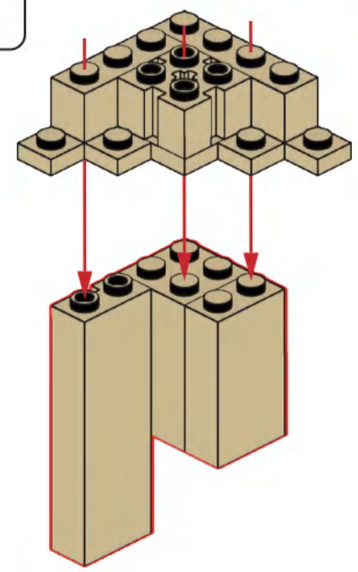

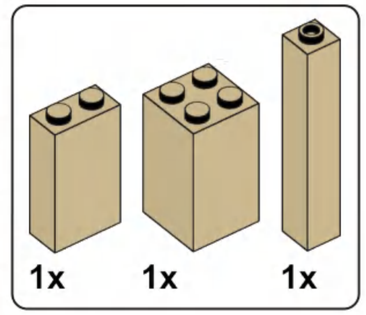

R10

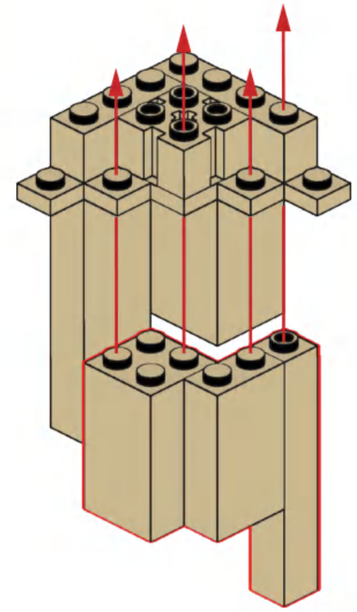

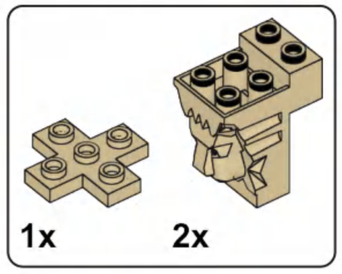

R11

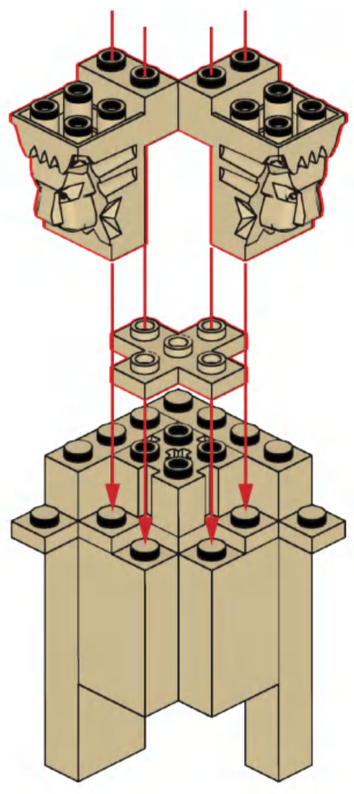

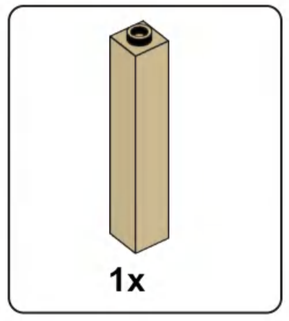

R12

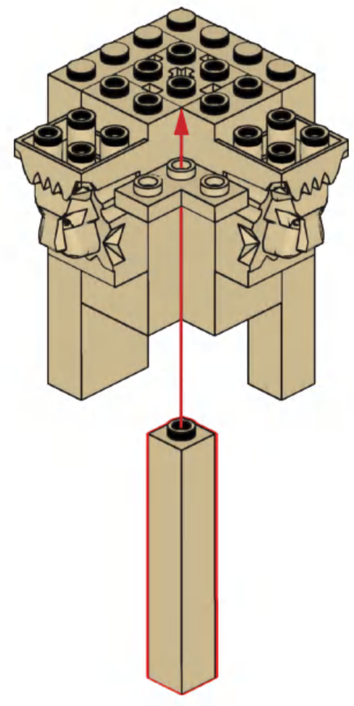

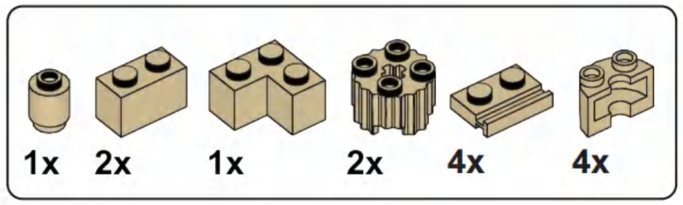

R13

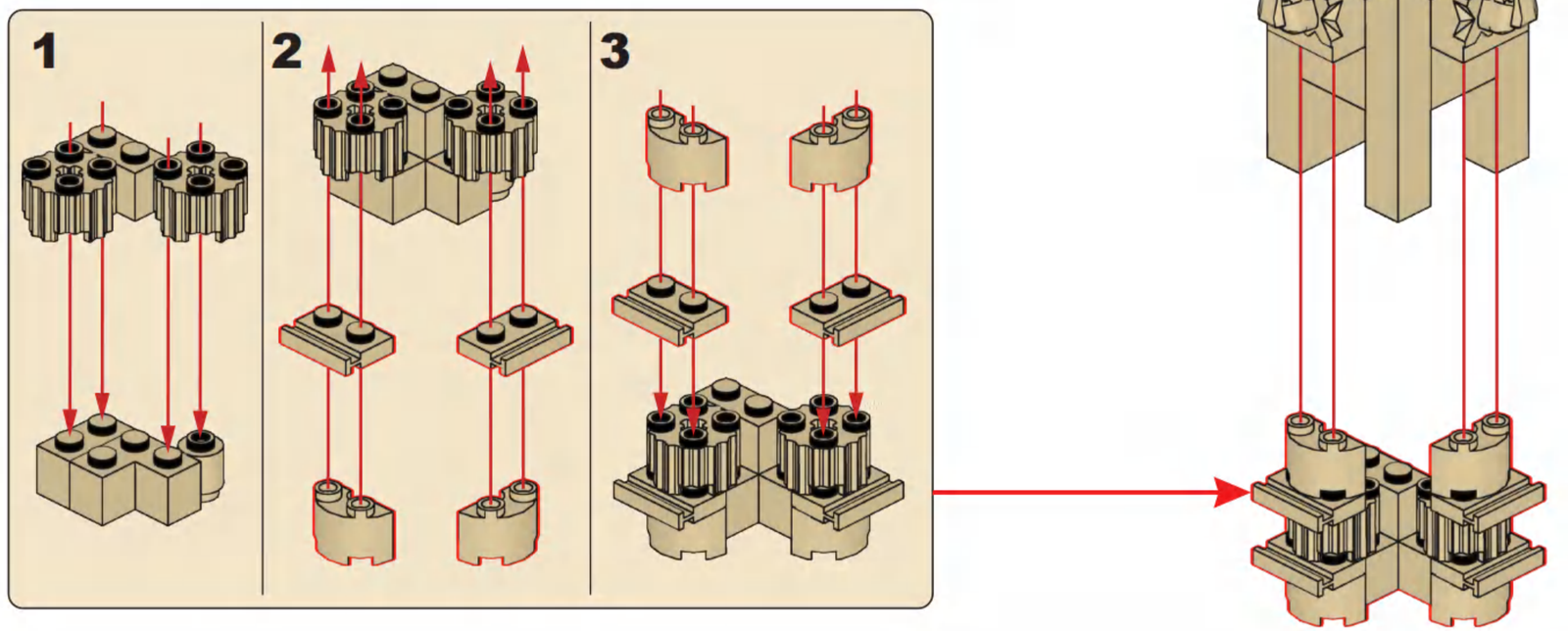

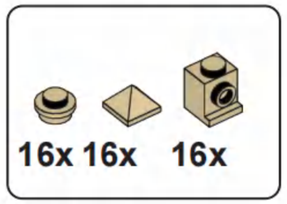

R14

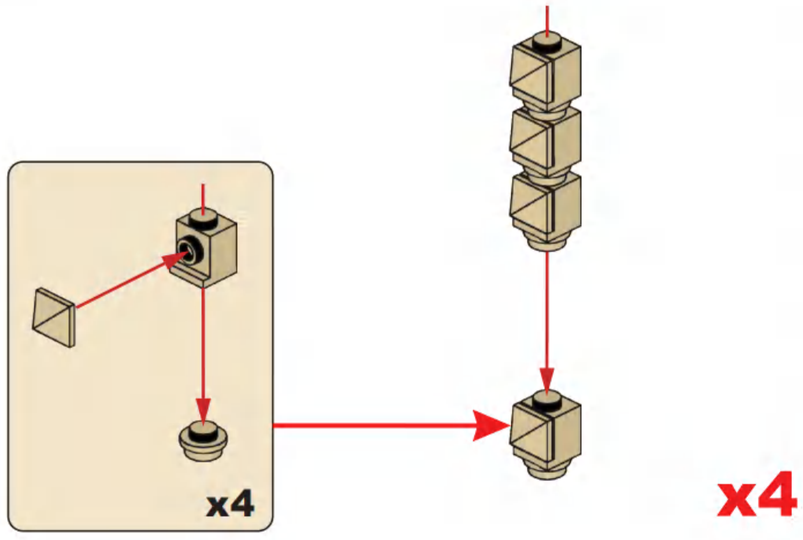

R15

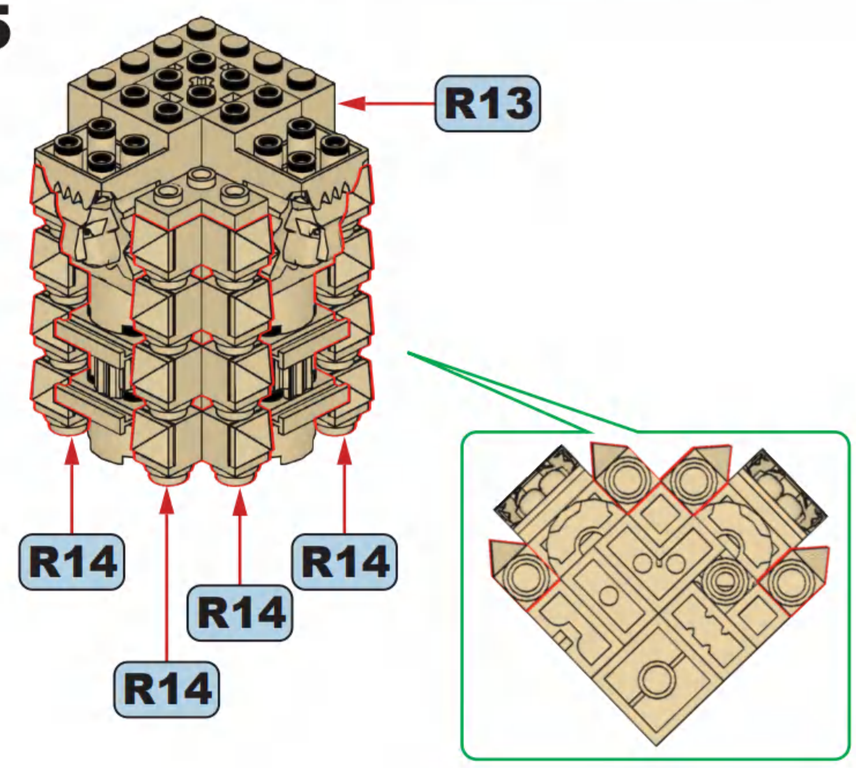

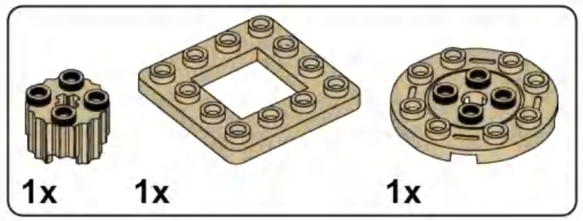

R16

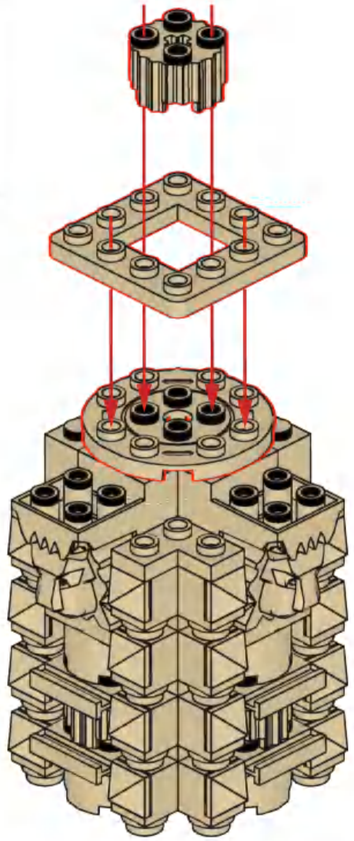

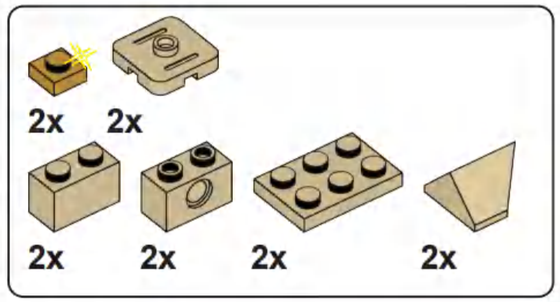

R17

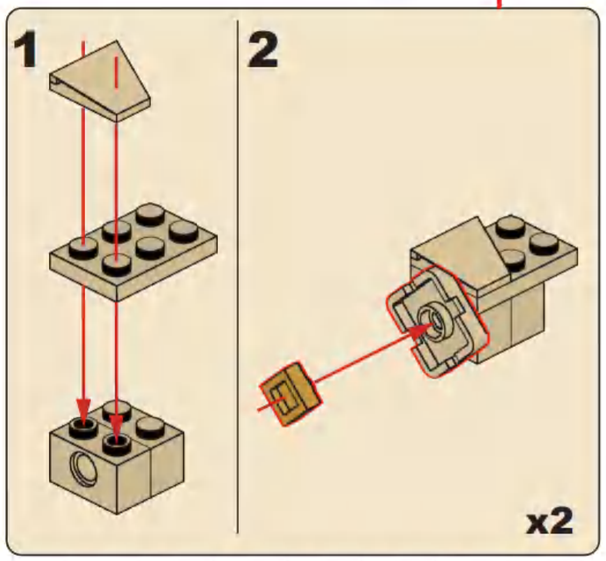

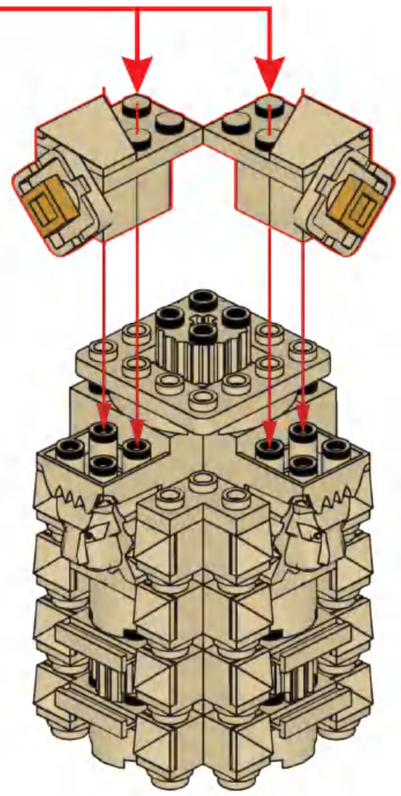

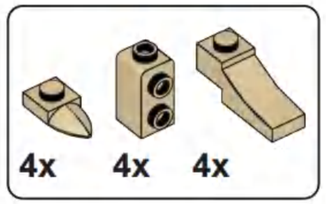

R18

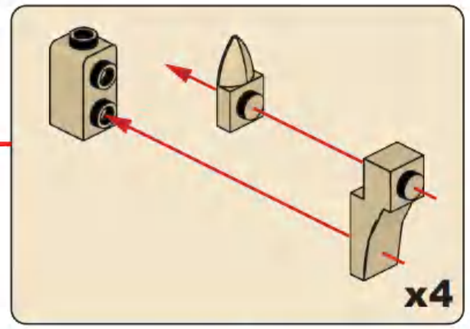

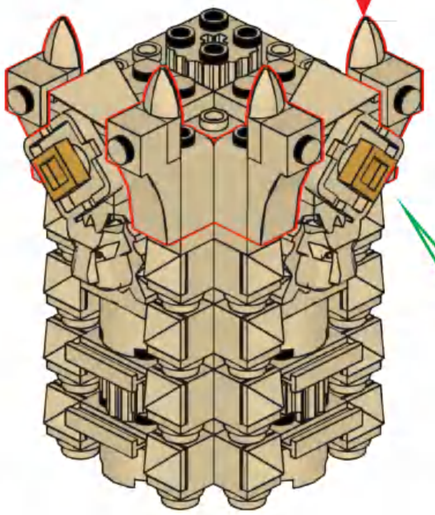

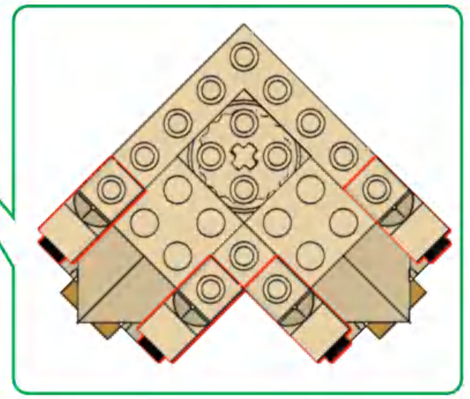

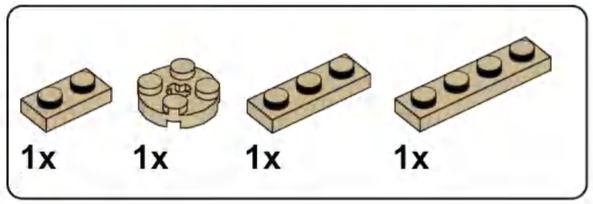

R19

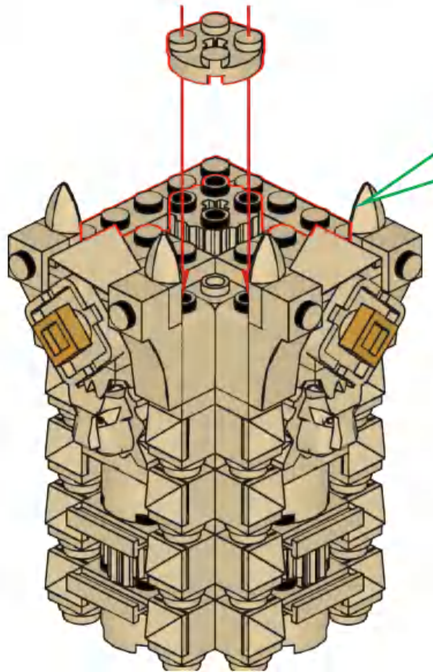

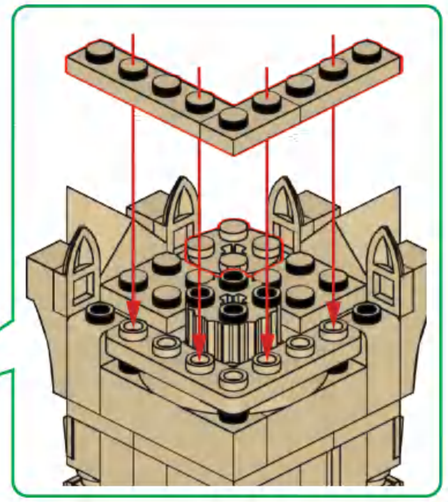

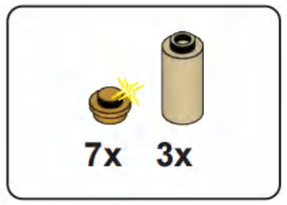

R20

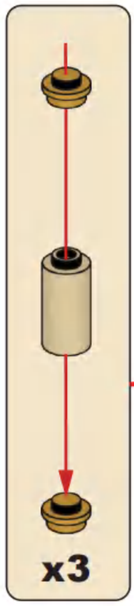

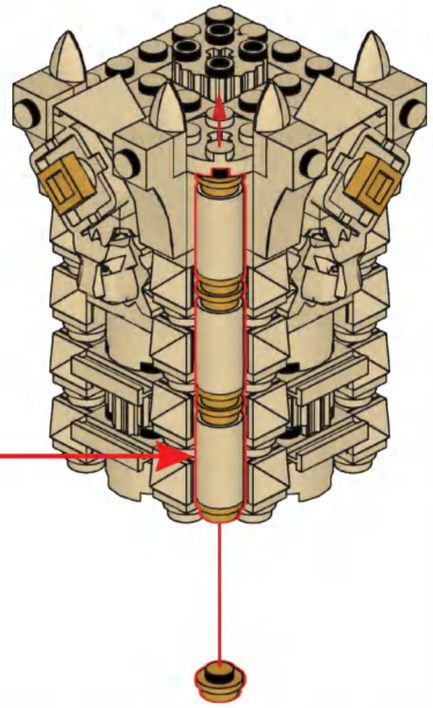

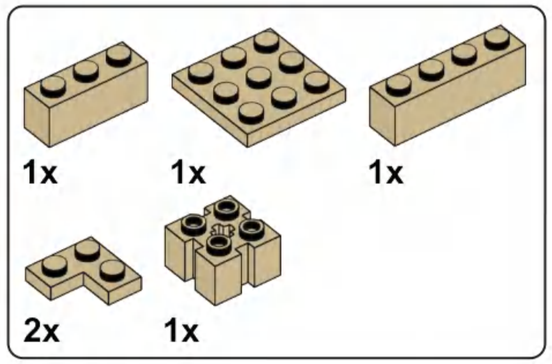

R21

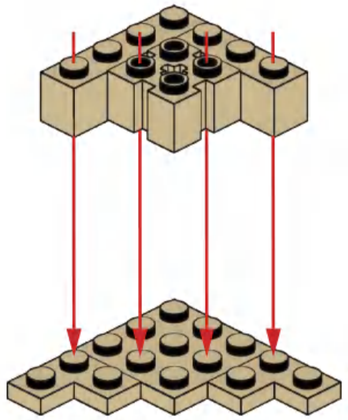

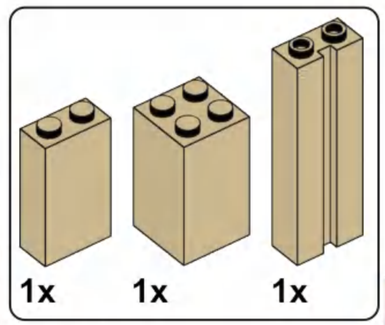

R22

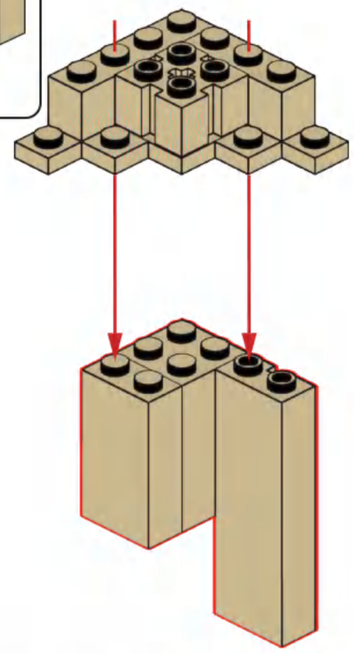

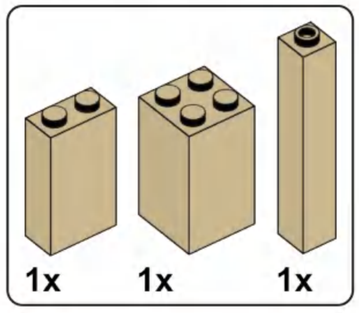

R23

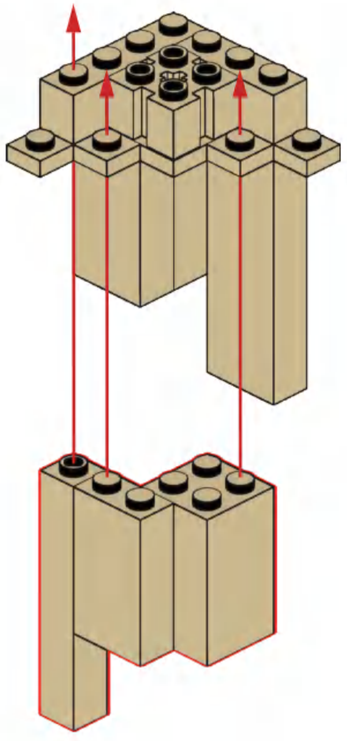

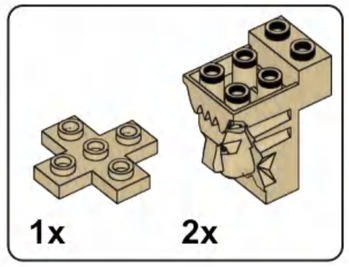

R24

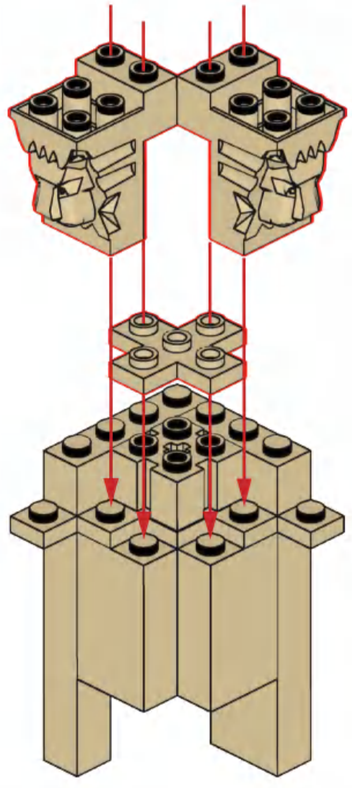

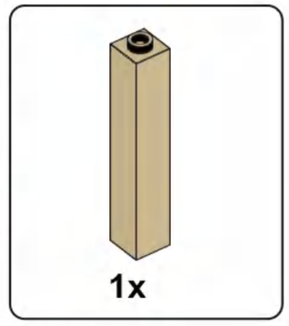

R25

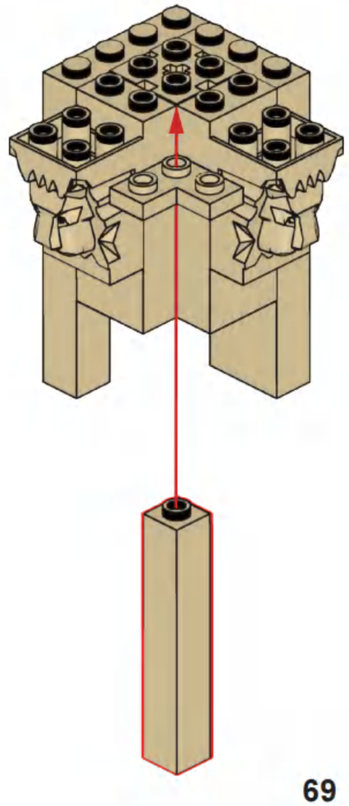

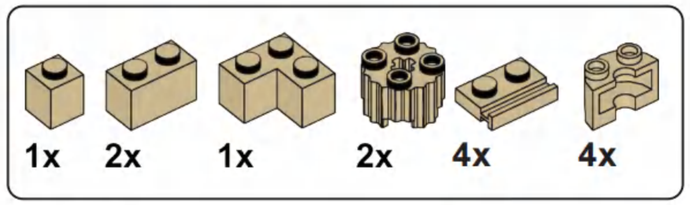

R26

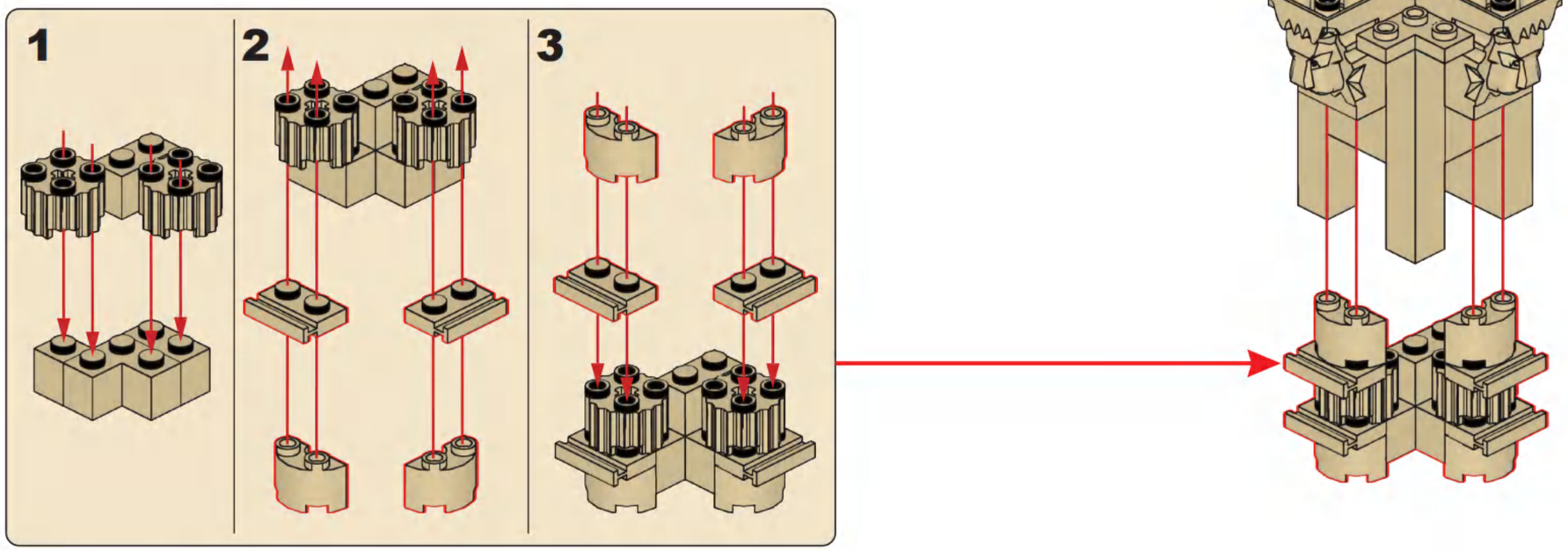

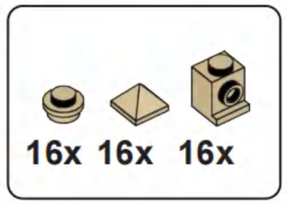

R27

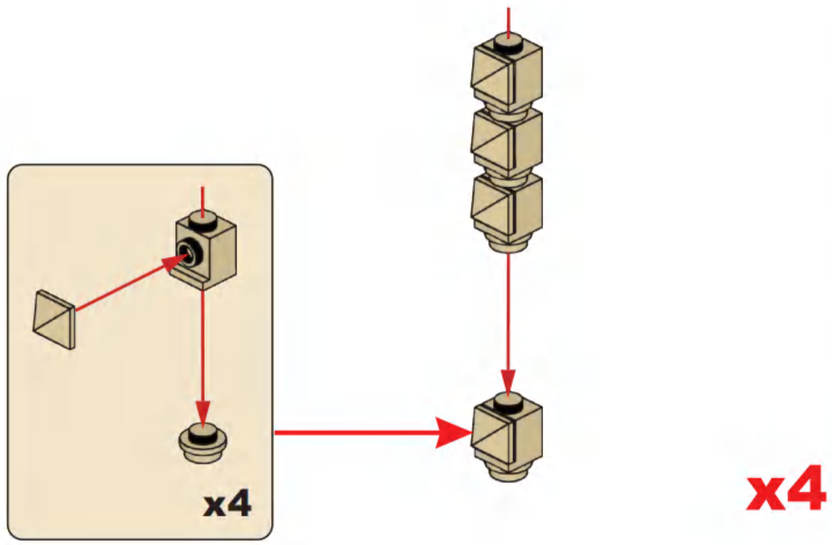

x4

R28

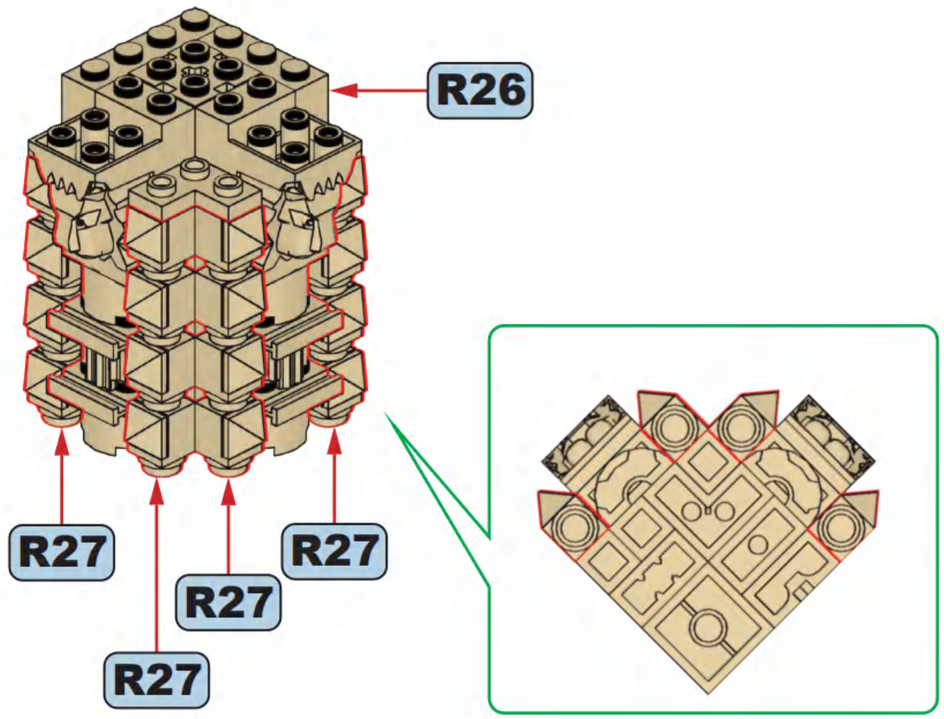

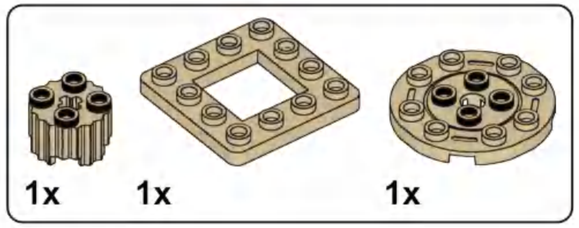

R29

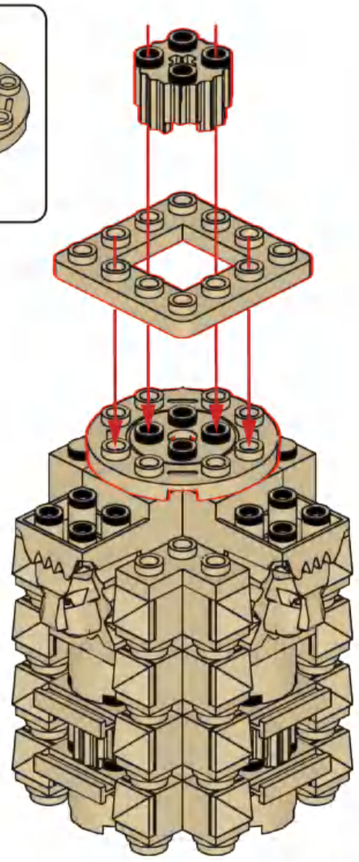

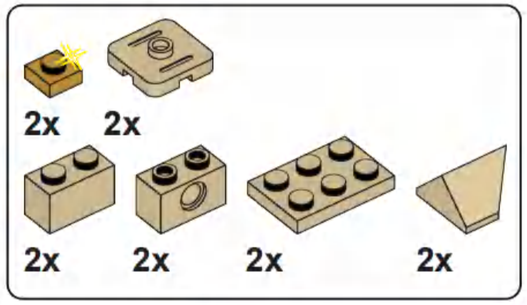

R30

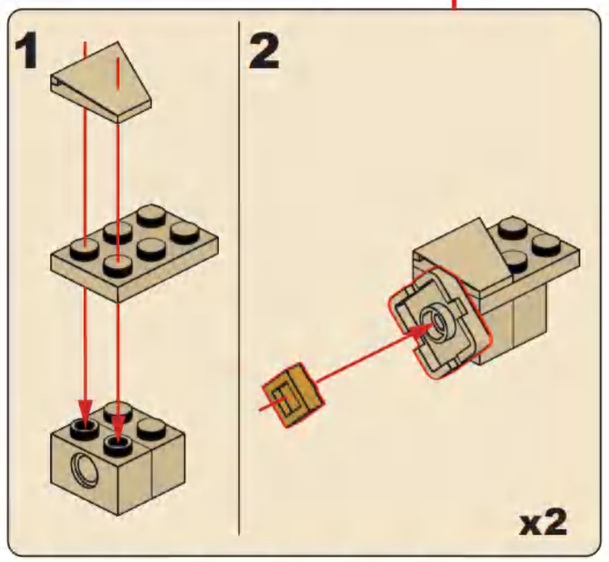

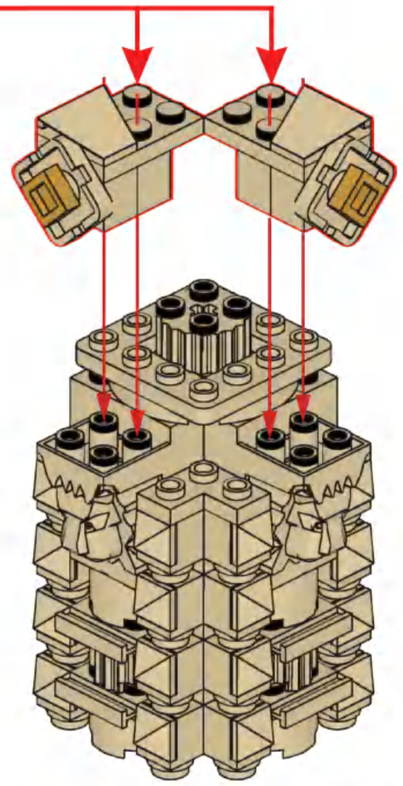

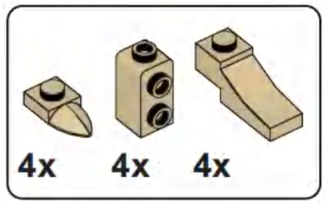

R31

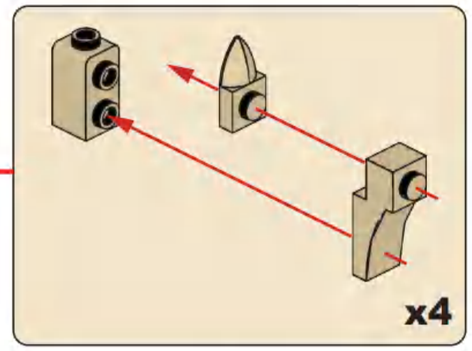

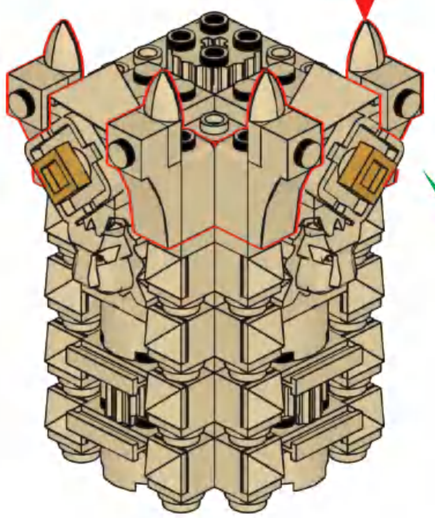

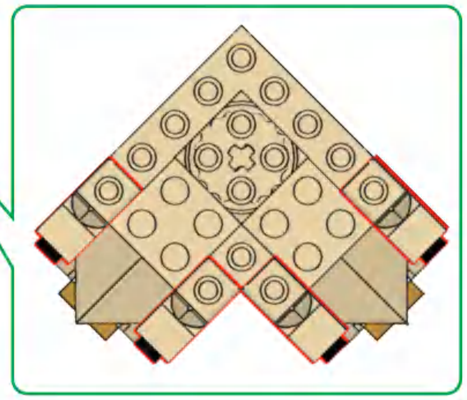

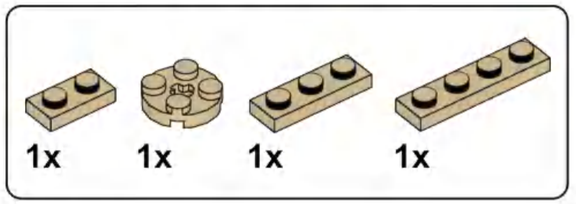

R32

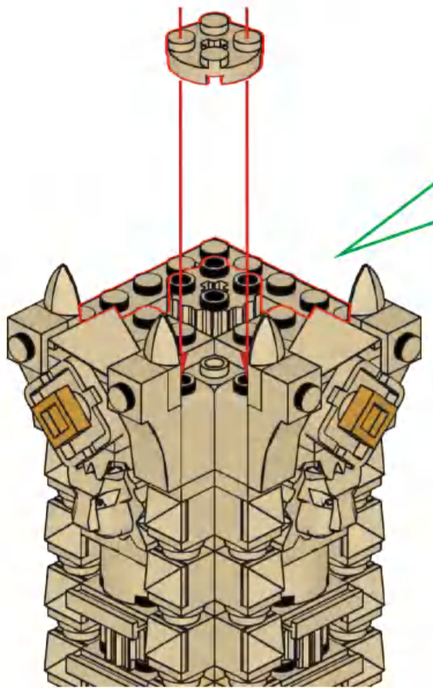

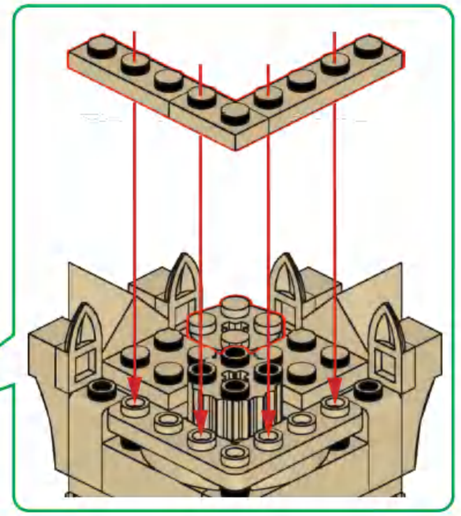

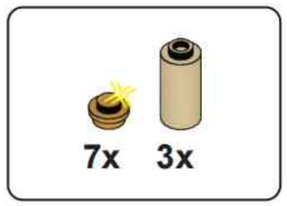

R33

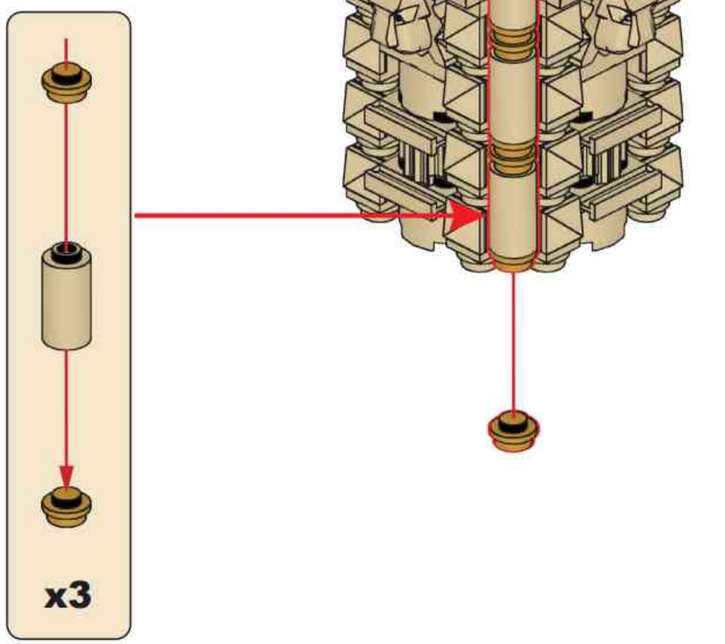

R34

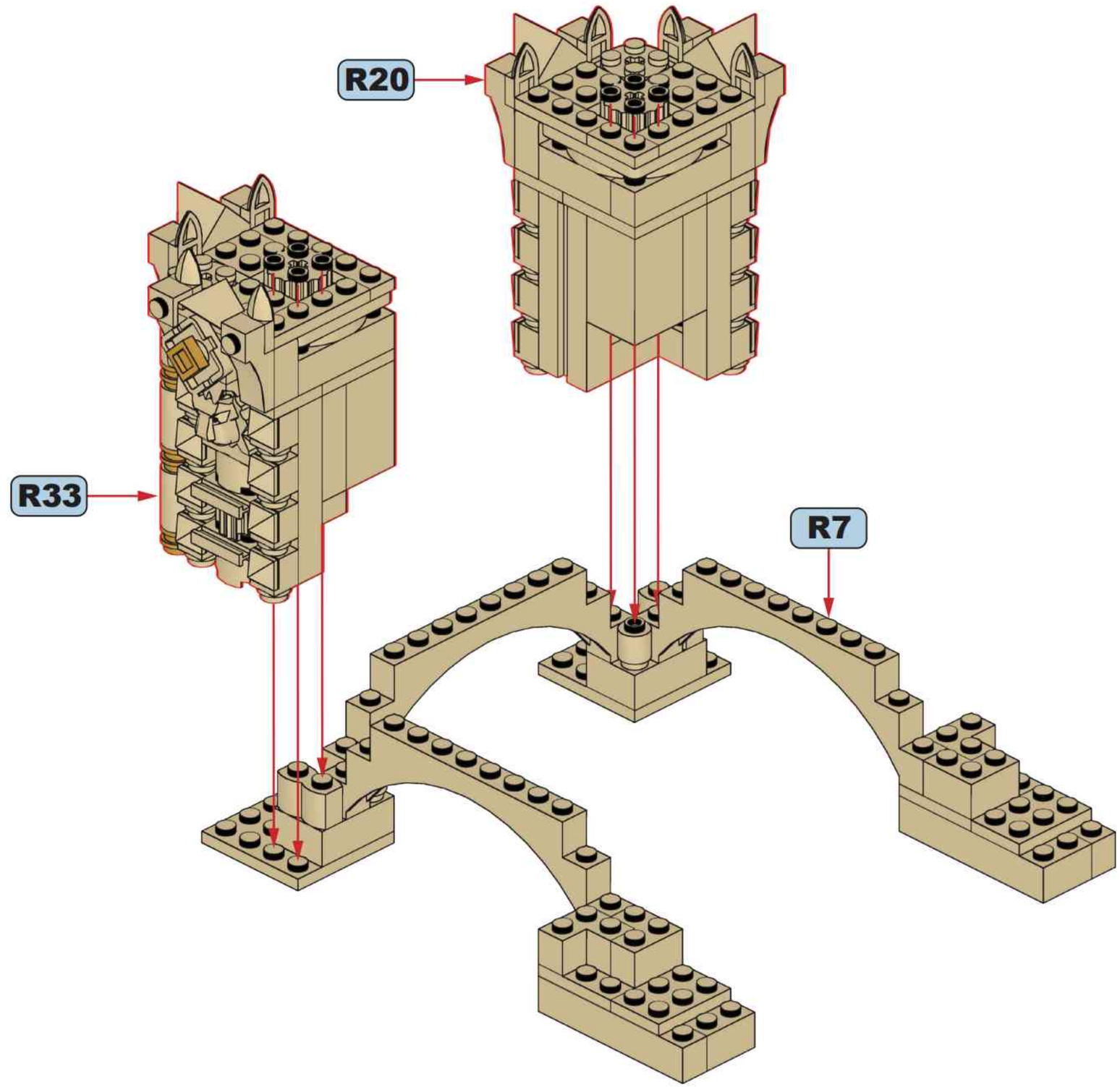

R35

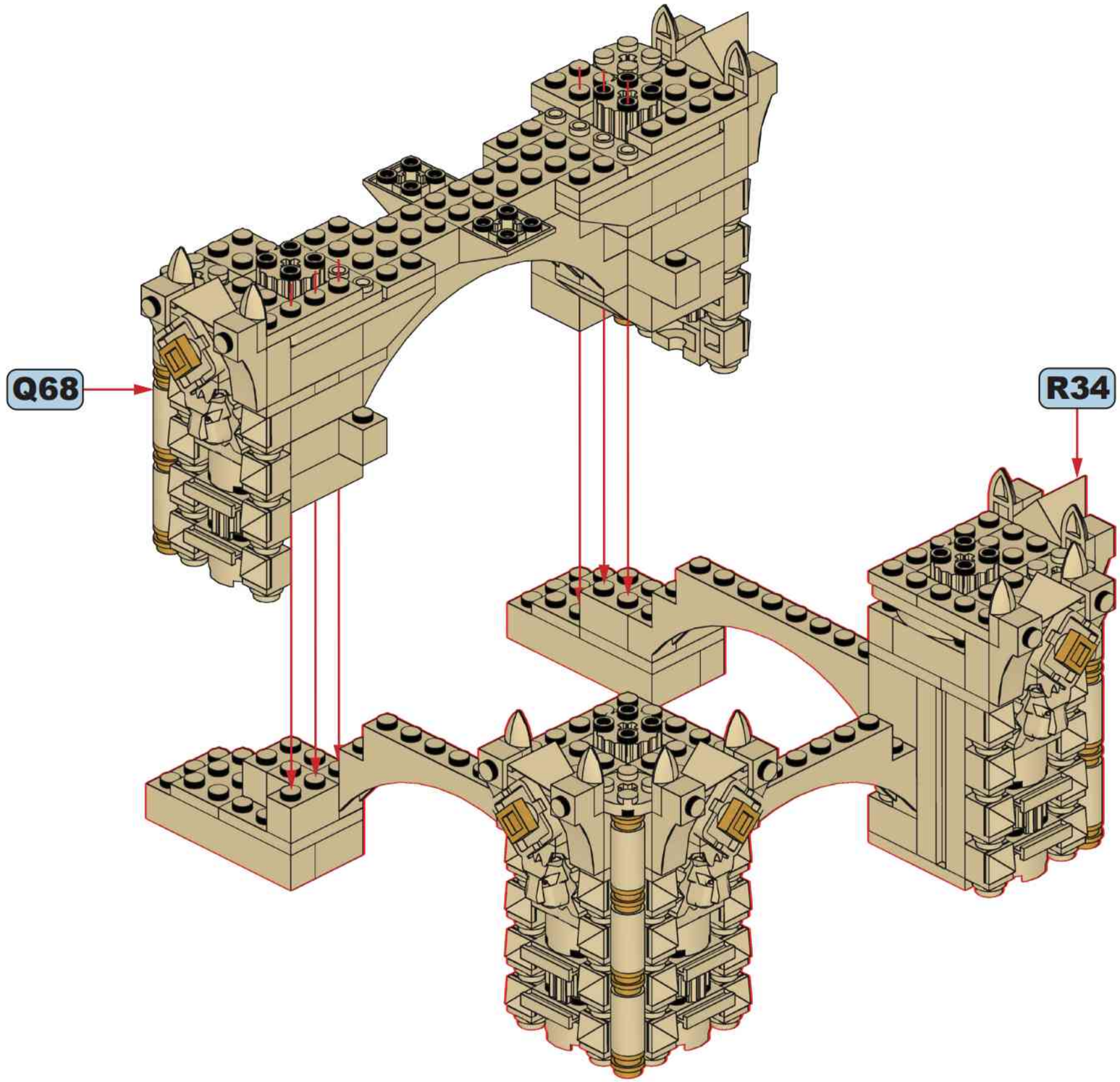

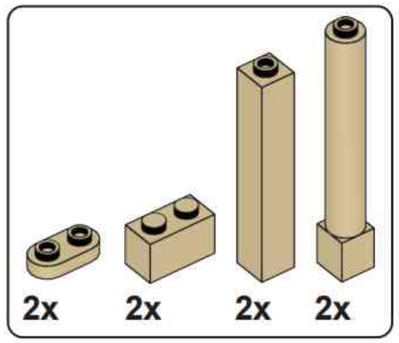

R36

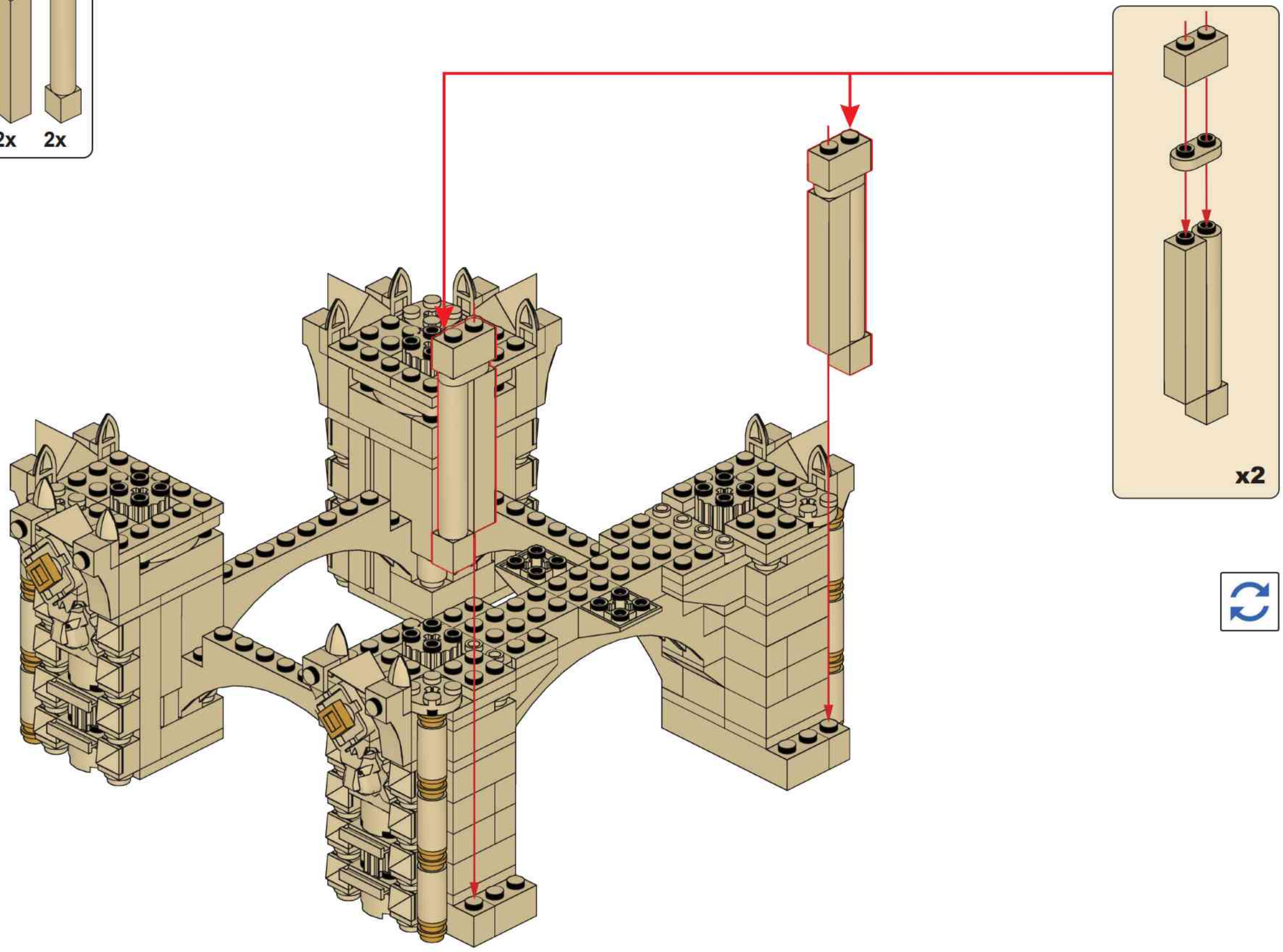

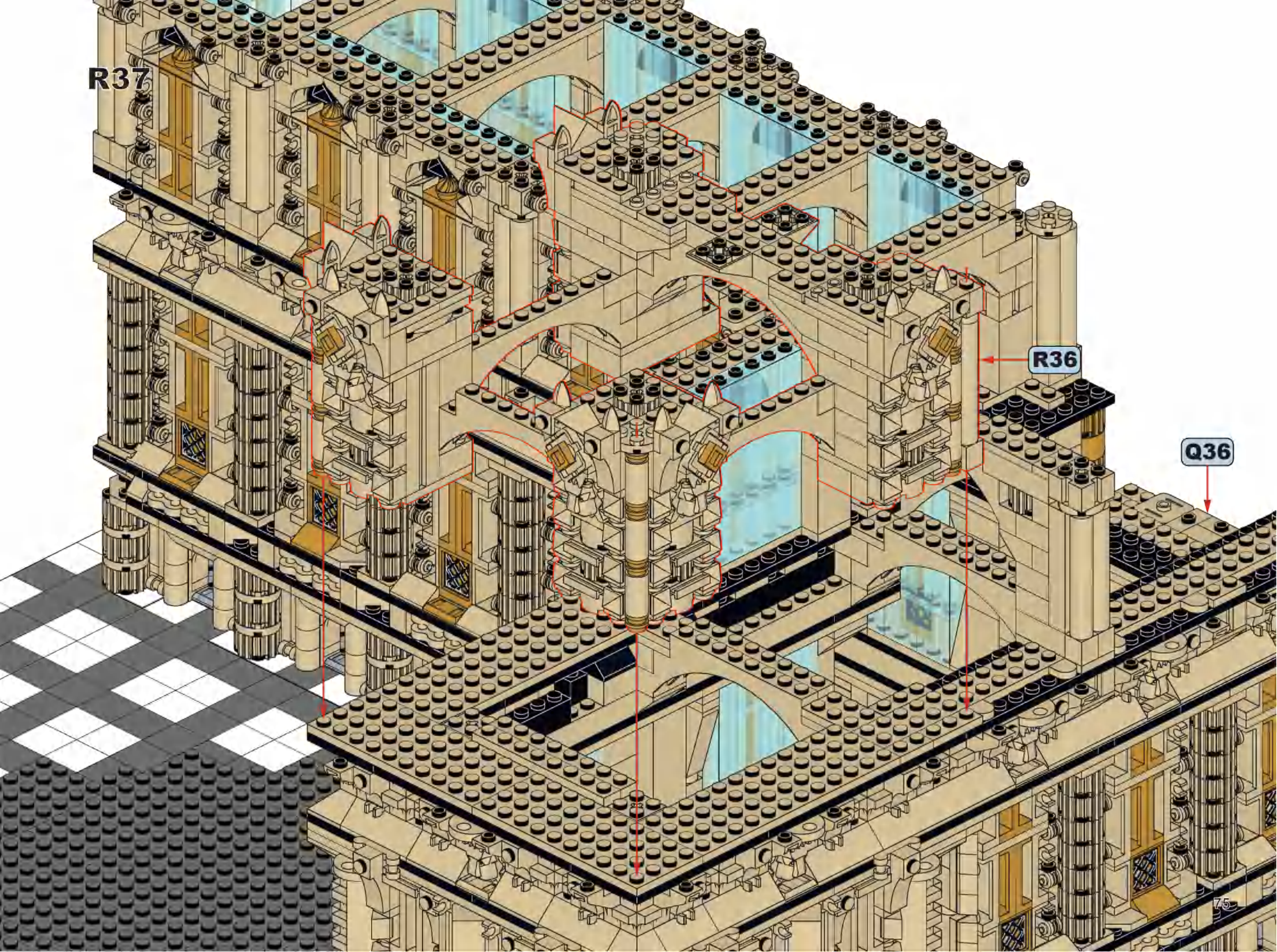
R37
R36
Q36

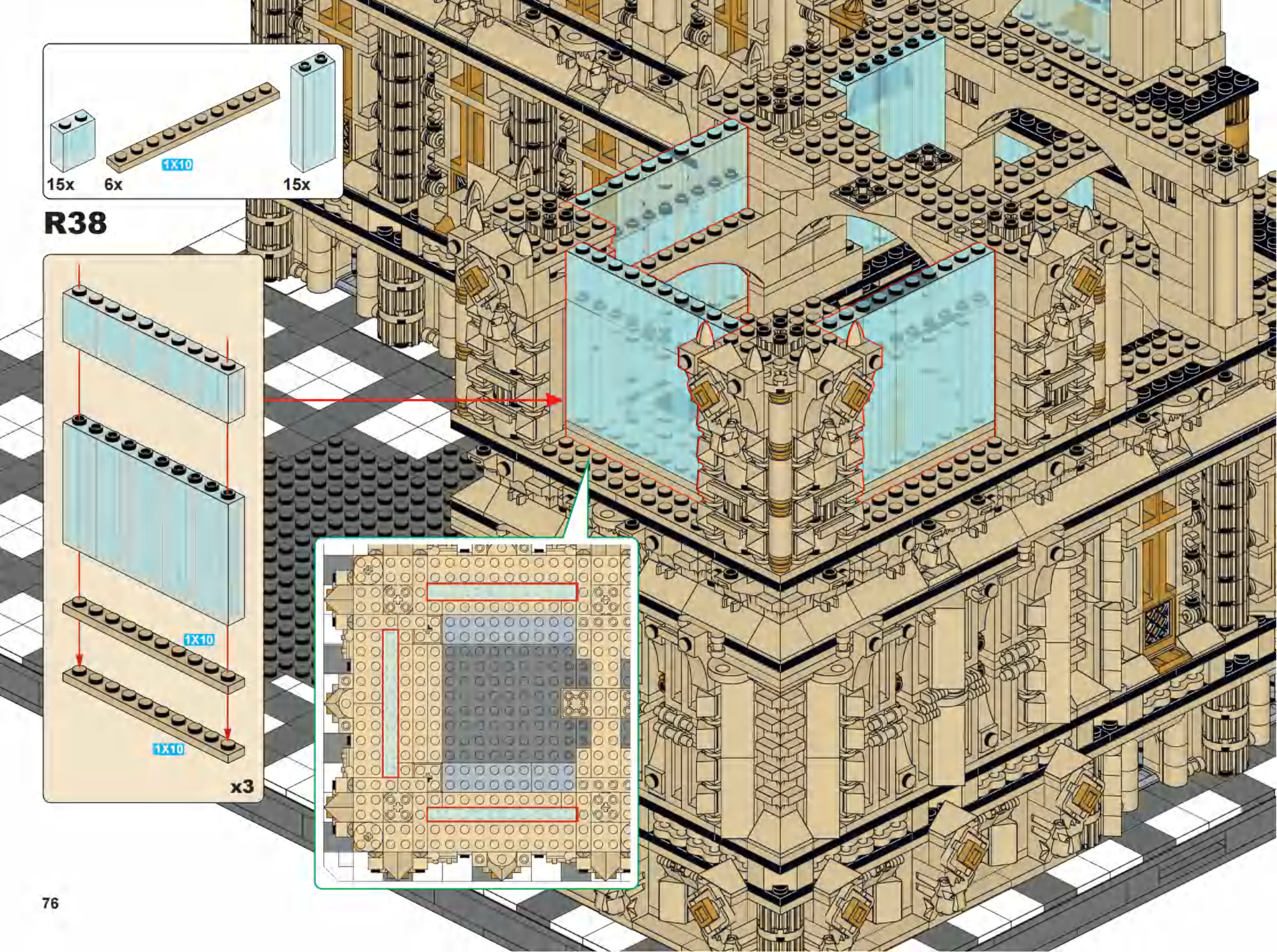
15x
6x
1X10
15x
R38
1X10
1X10
x3

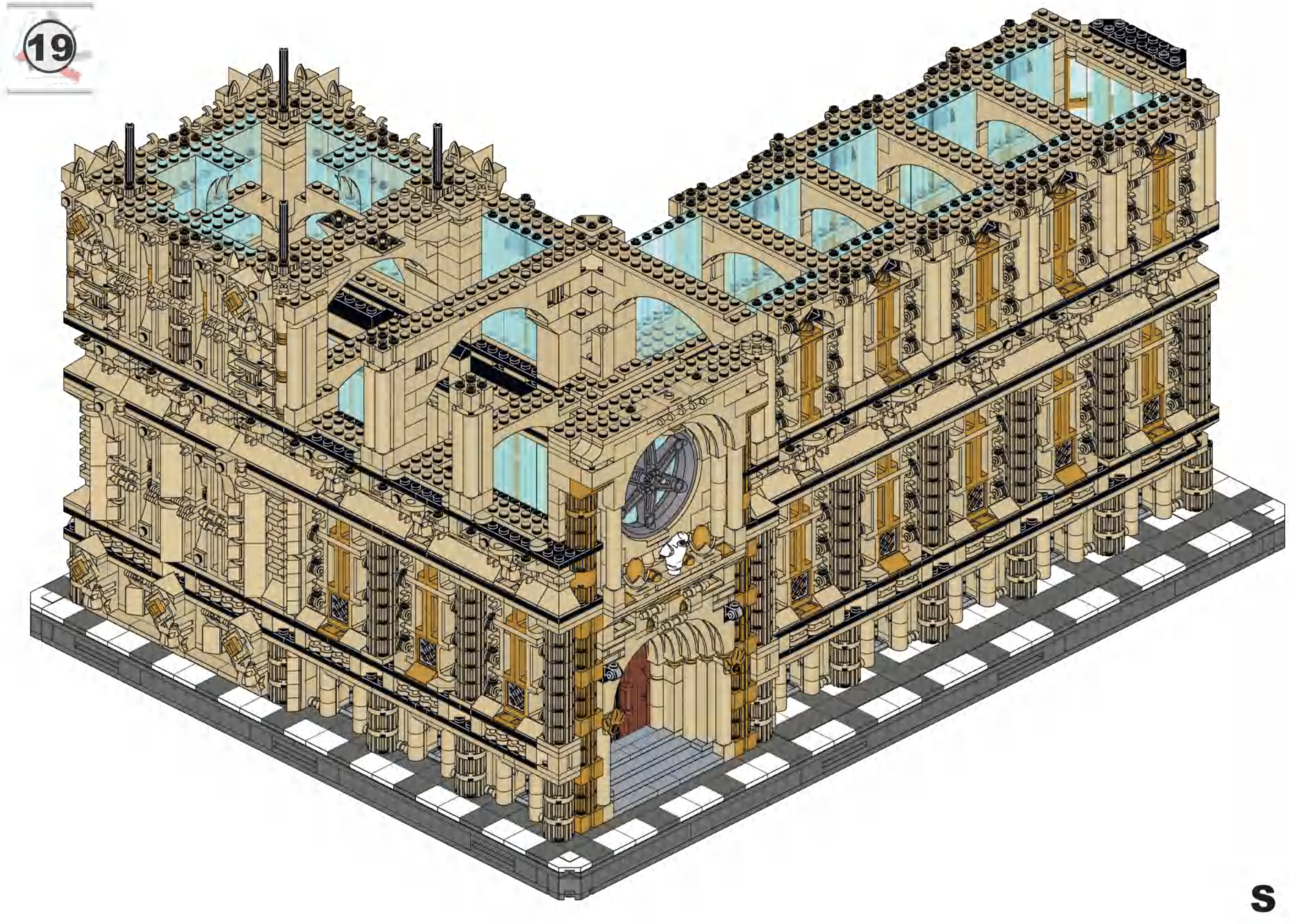
19
S

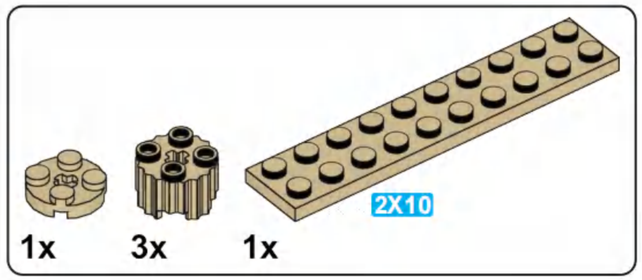

S1

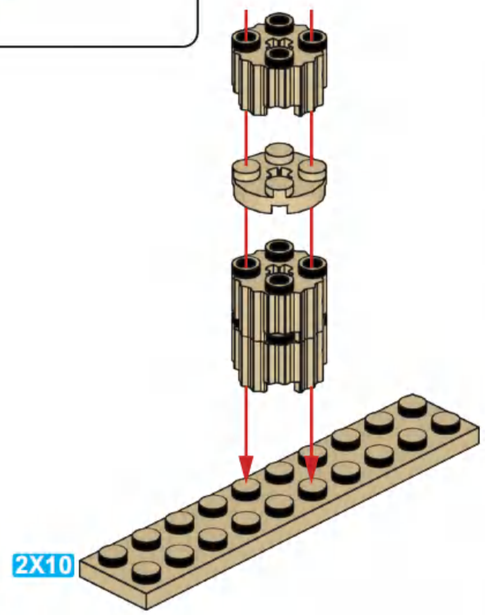

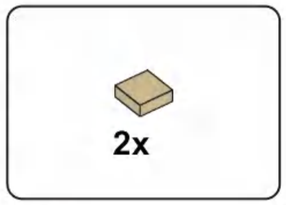

S2

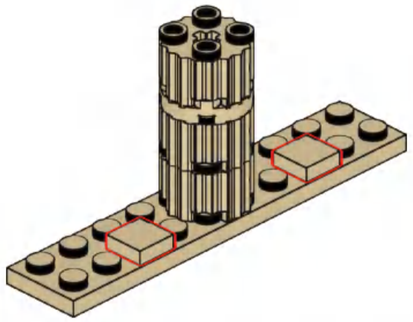

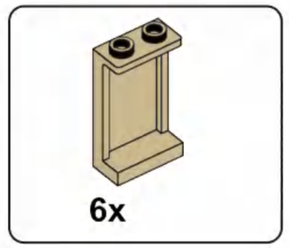

S3

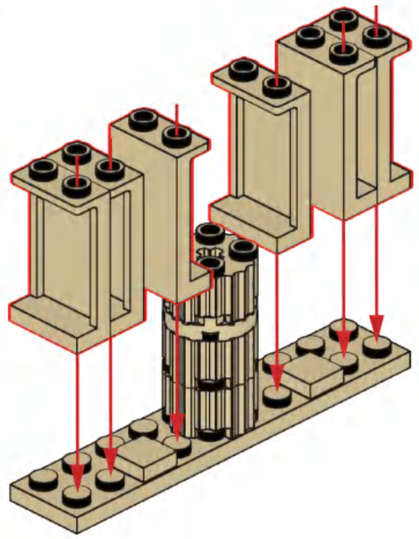

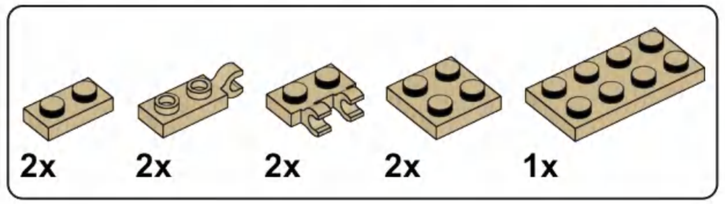

S4

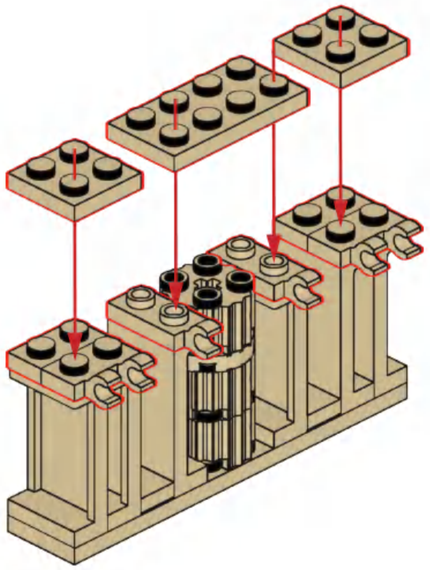

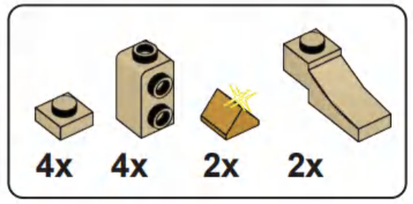

S5

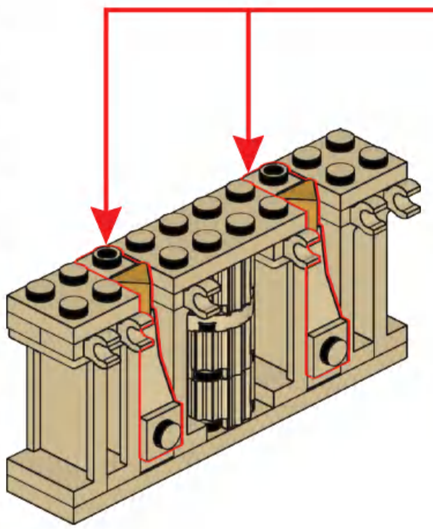

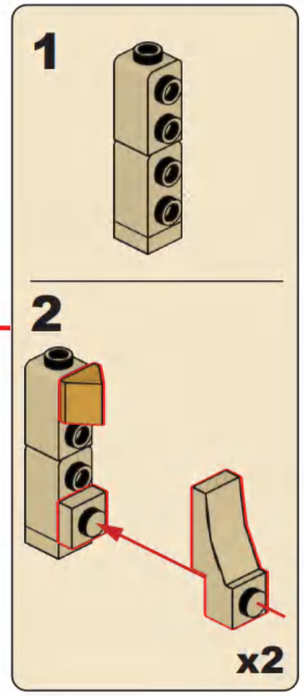

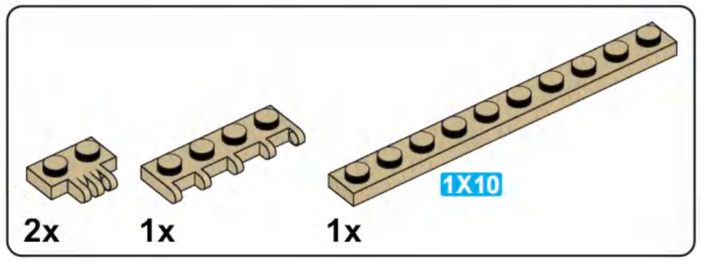

S6

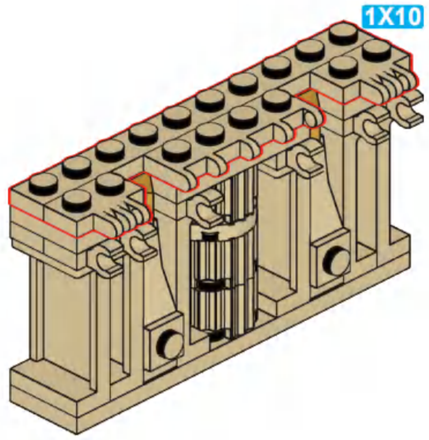

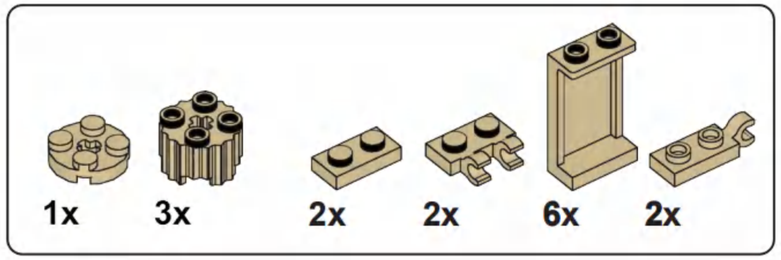

S7

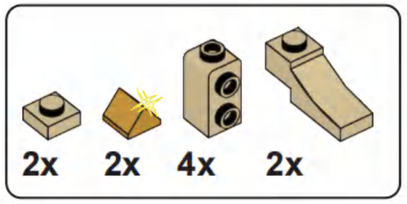

S8

S9

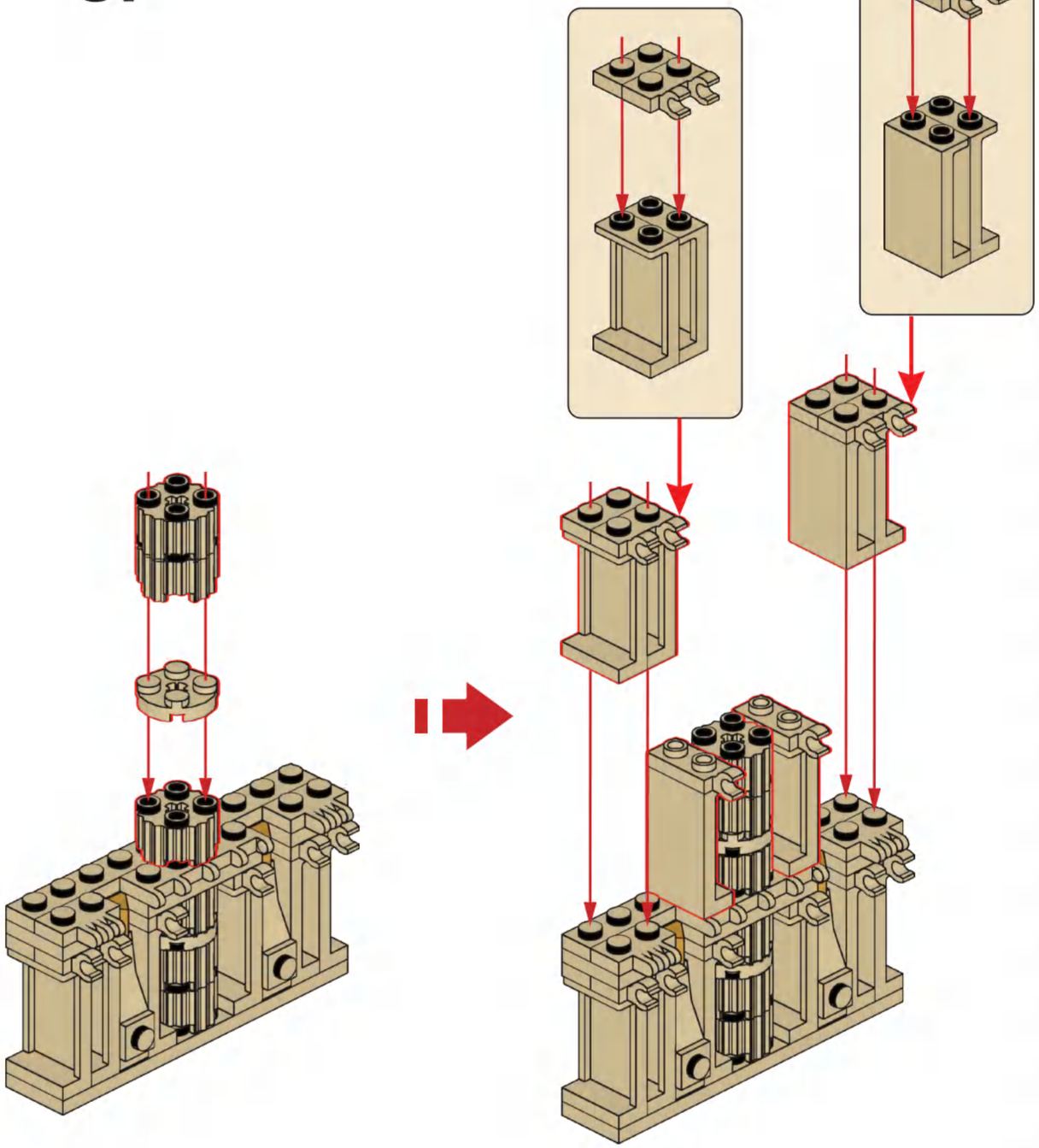

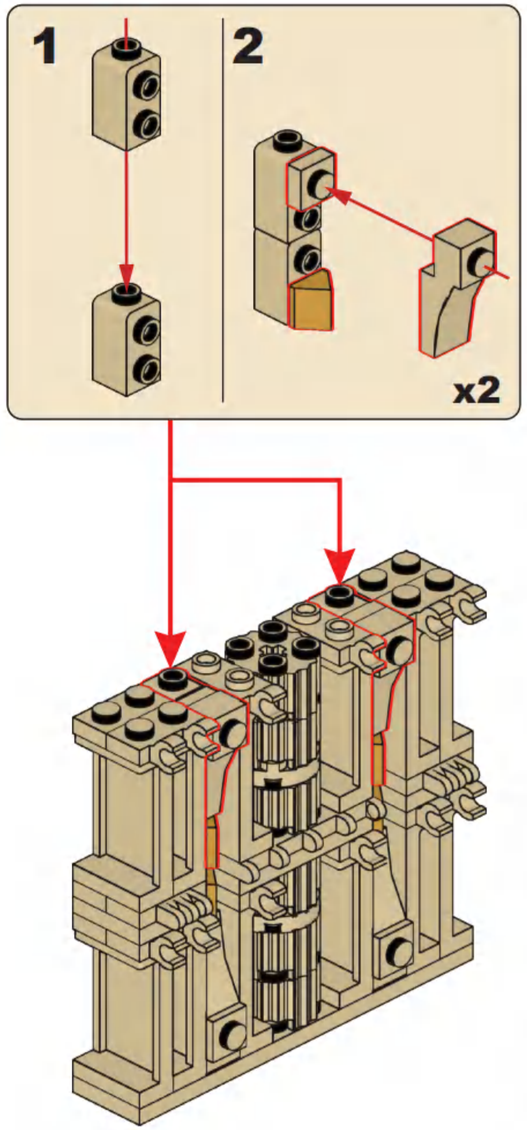

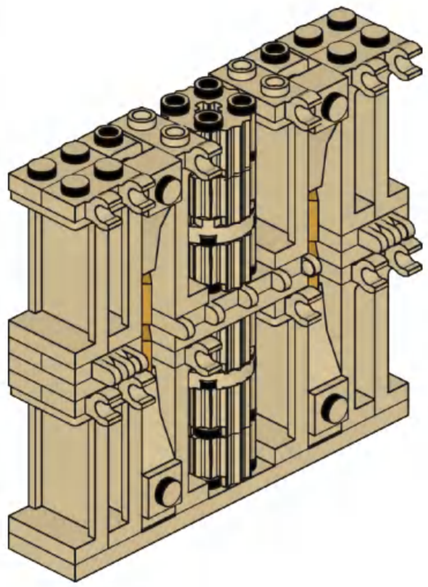

x3

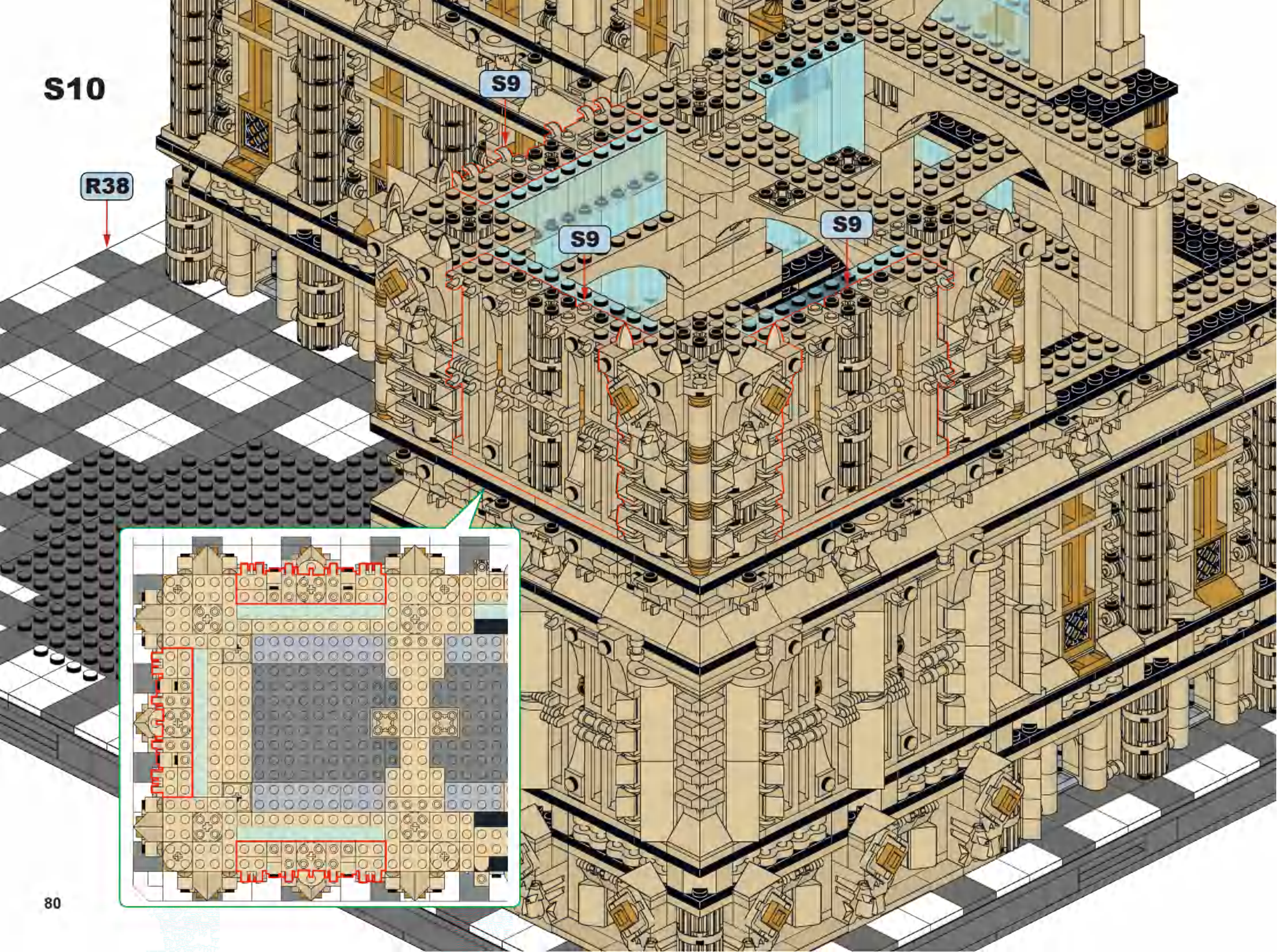
S10
S9
S9
S9
R38

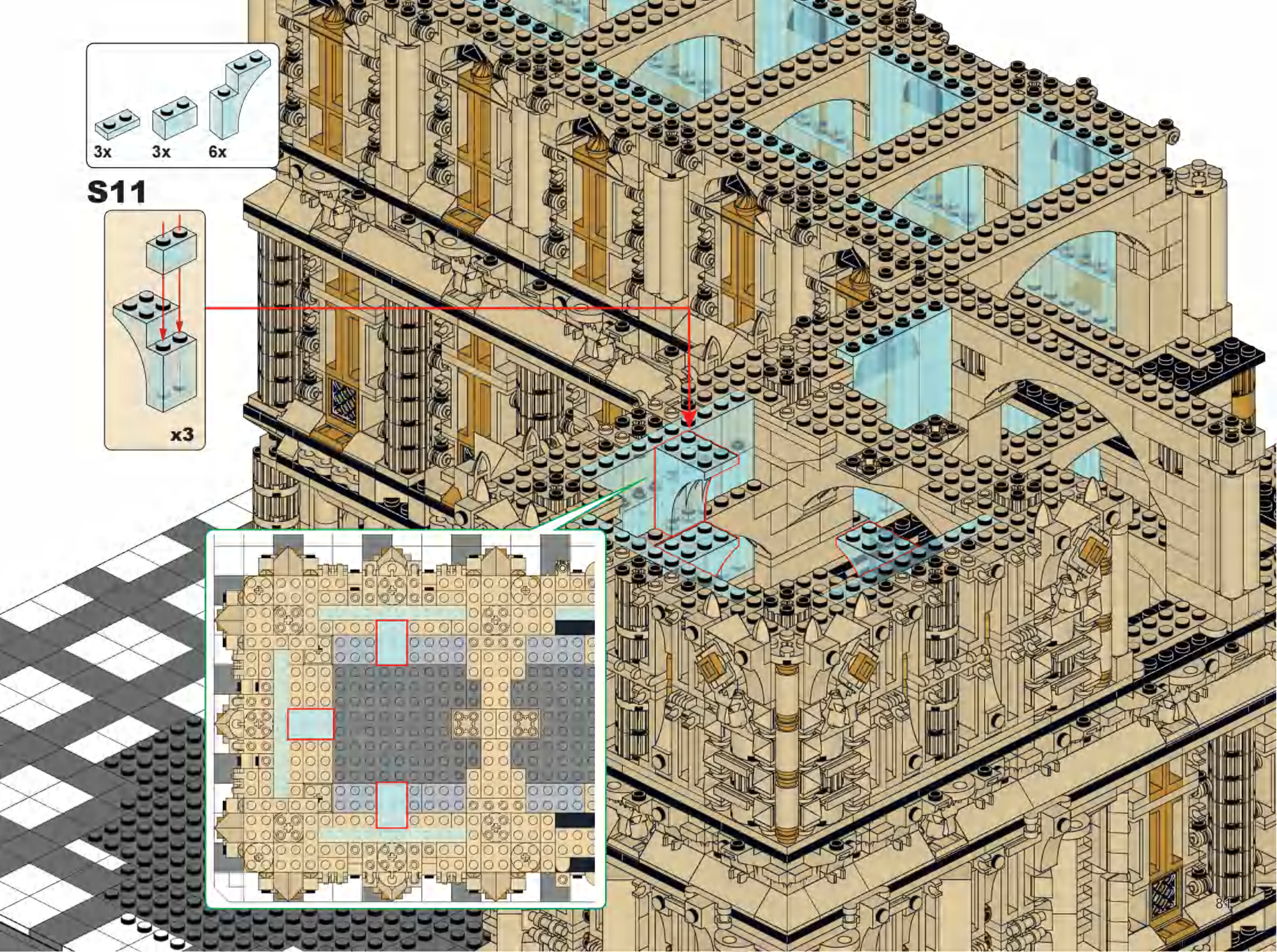
3x
3x
6x
S11
x3

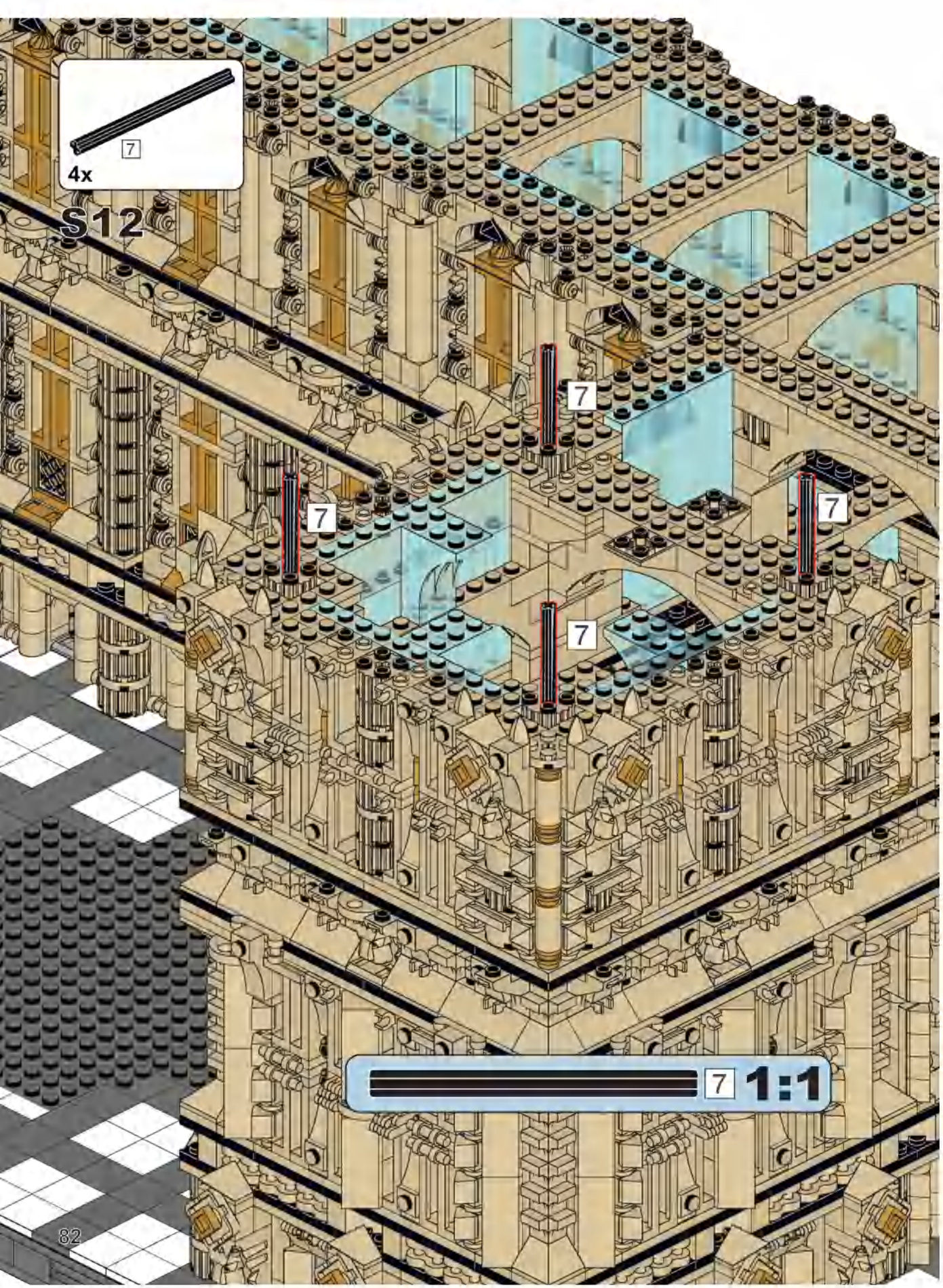
4x
7
S12
7
7
7
7
7
1:1

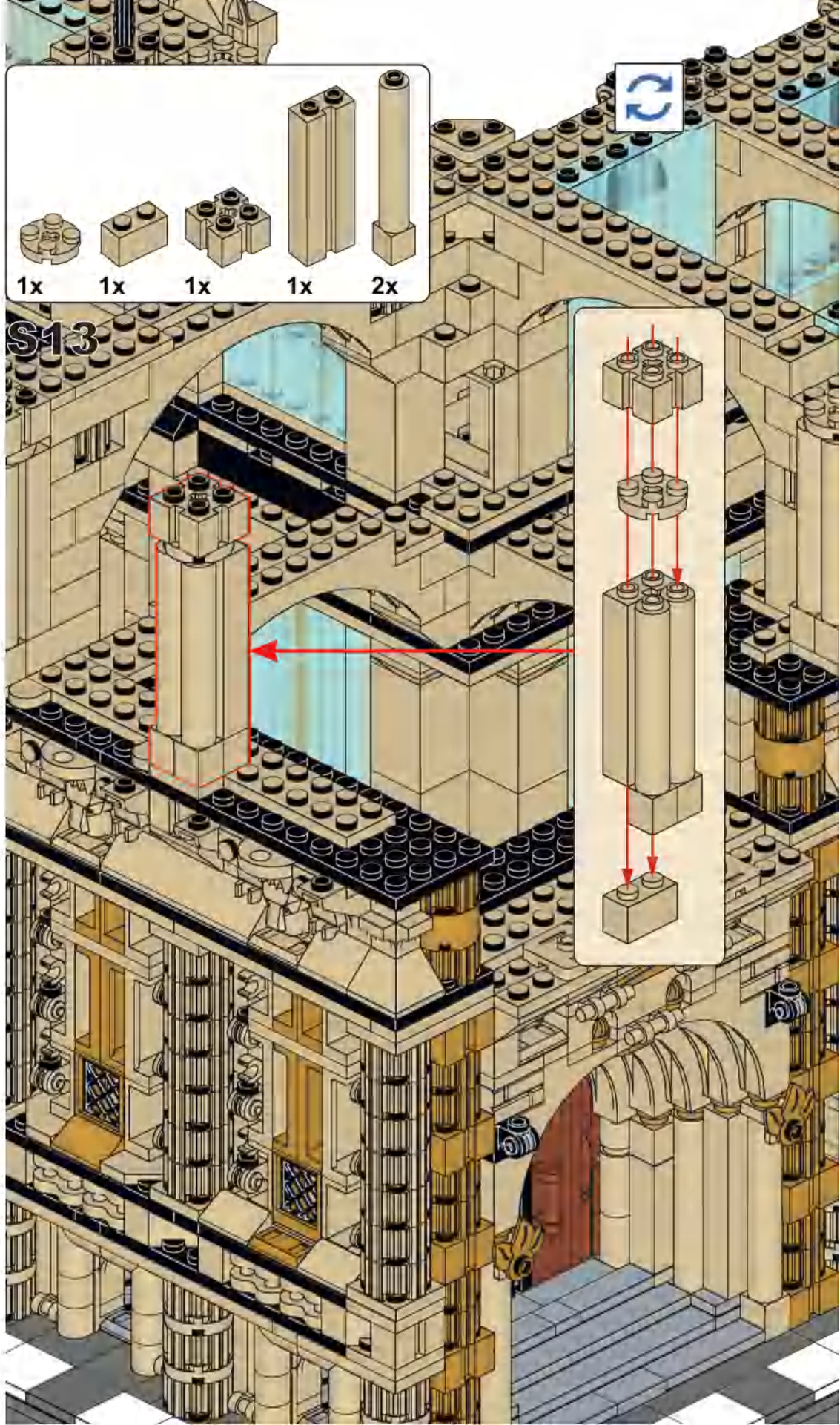
1x
1x
1x
1x
2x
S13

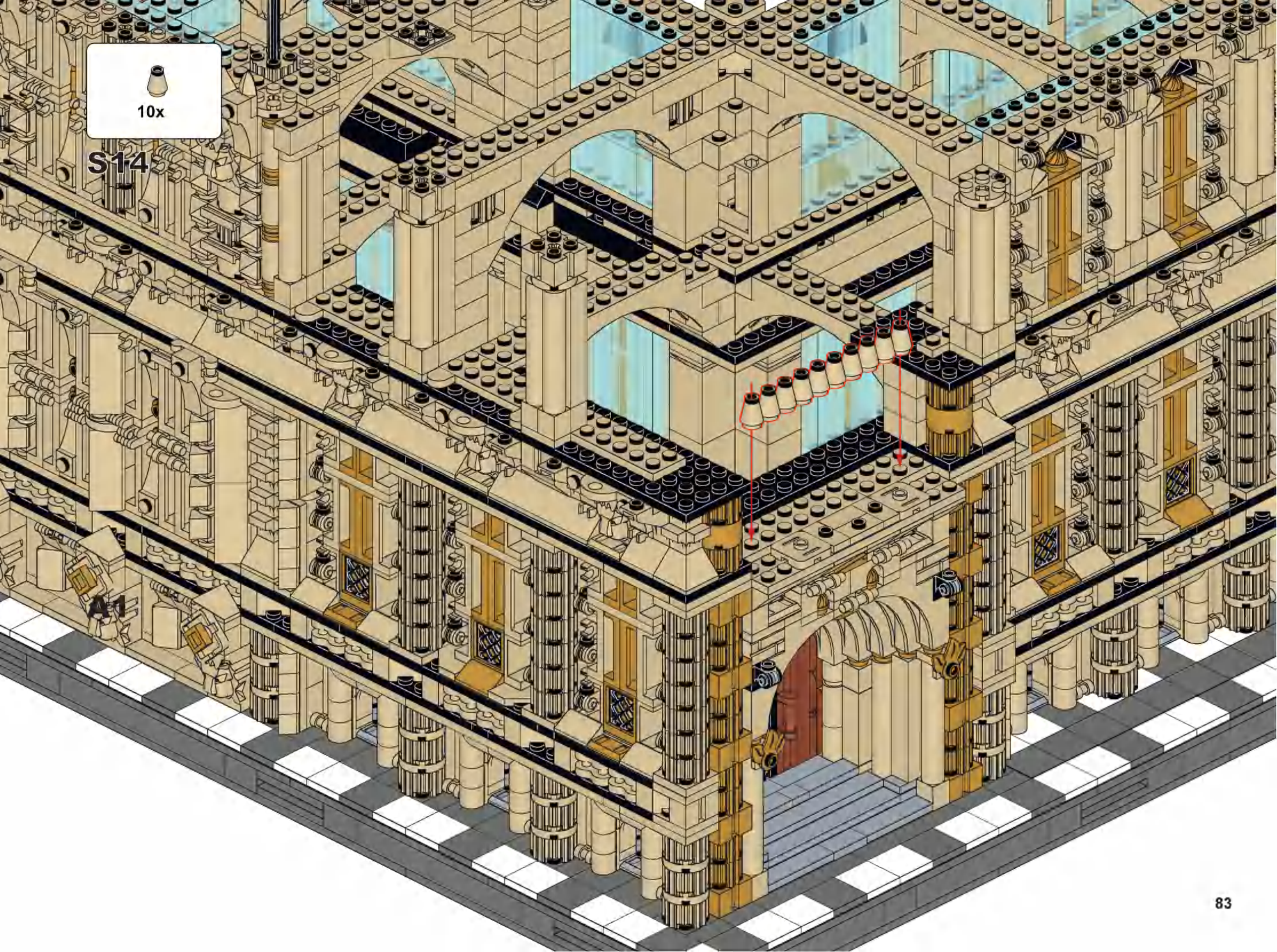
10x
S14
A1

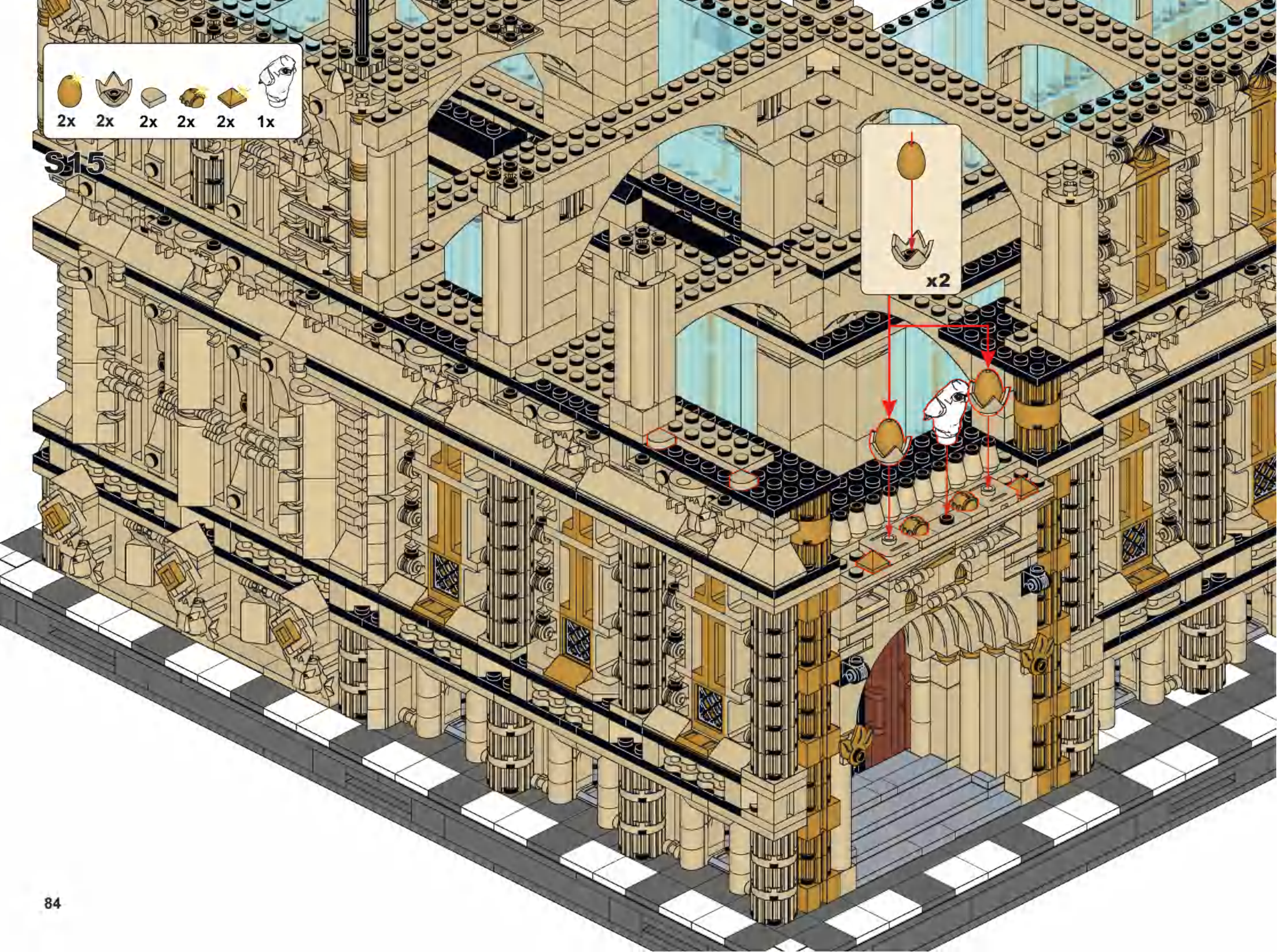
2x
2x
2x
2x
2x
1x
S15
x2

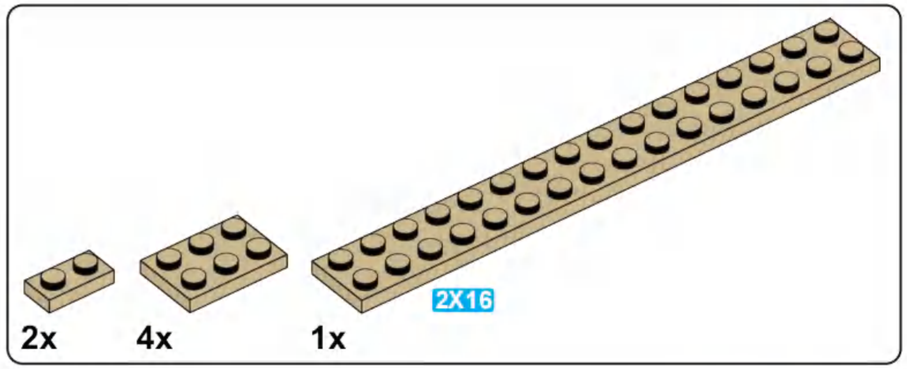

S16

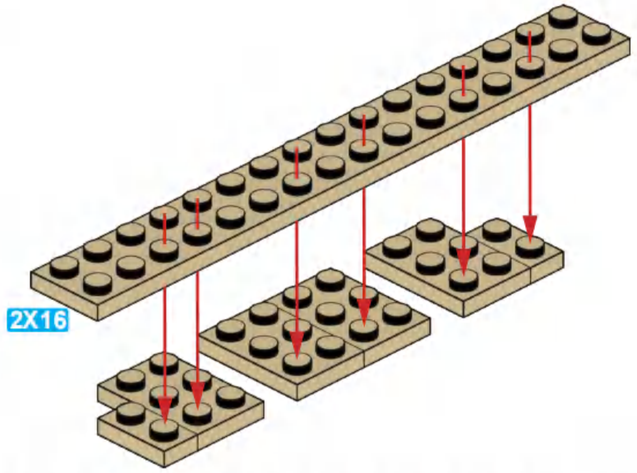

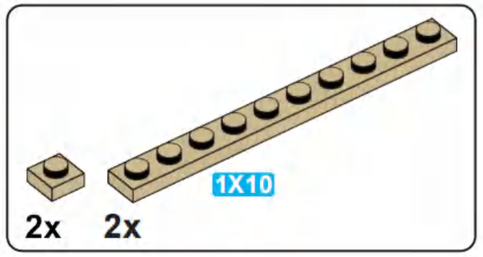

S17

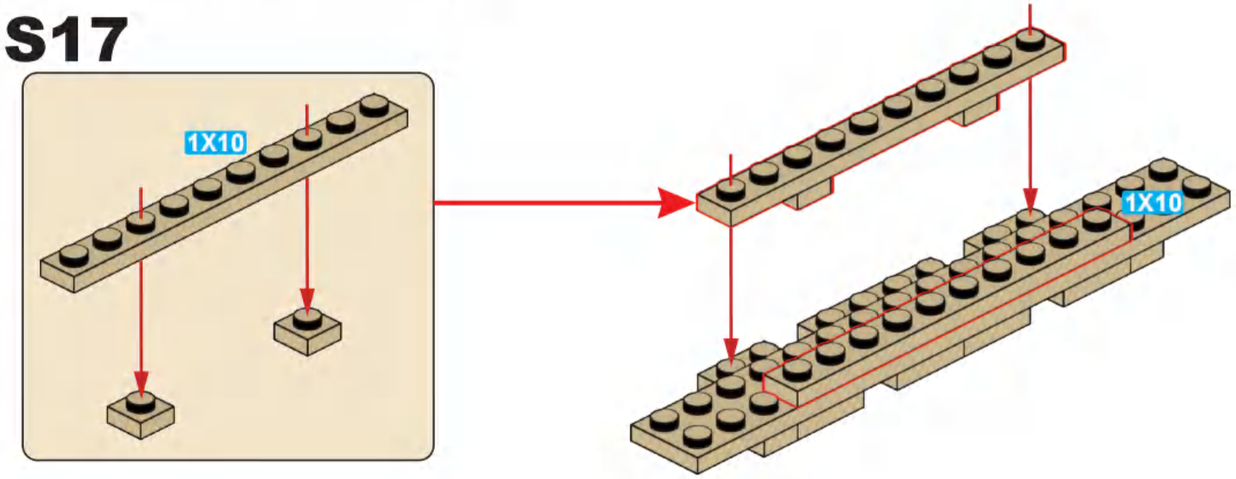

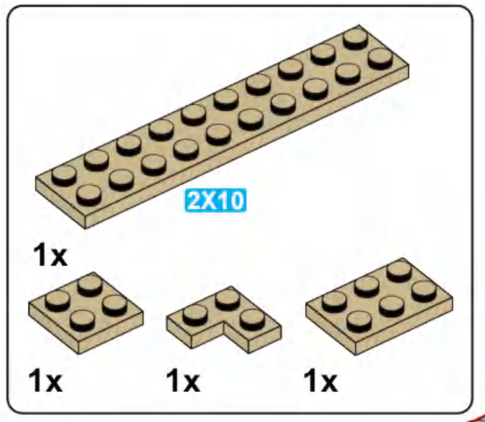

S18

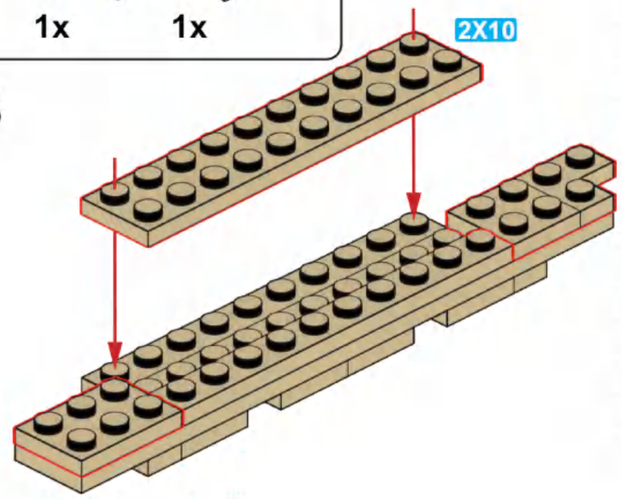

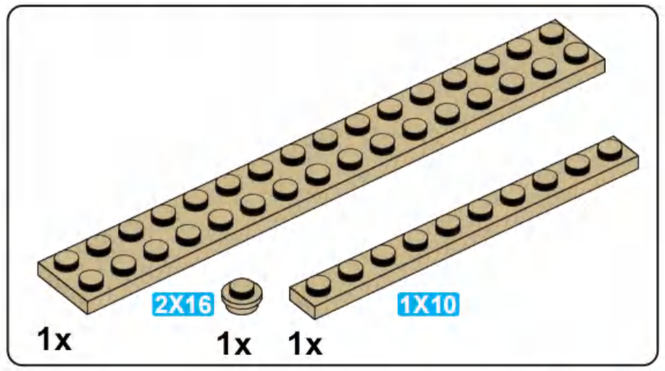

S19

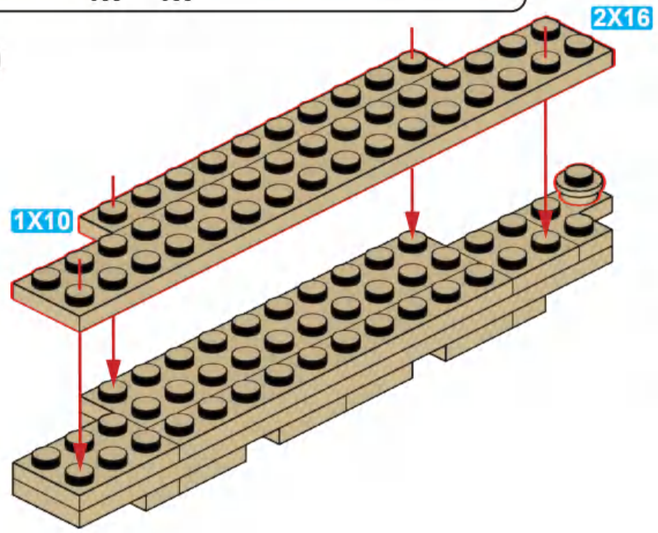

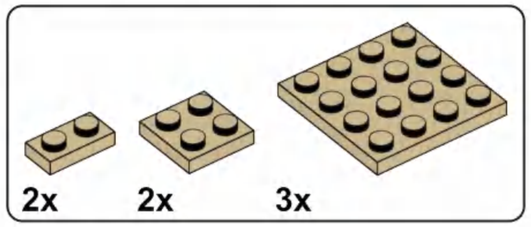

S20

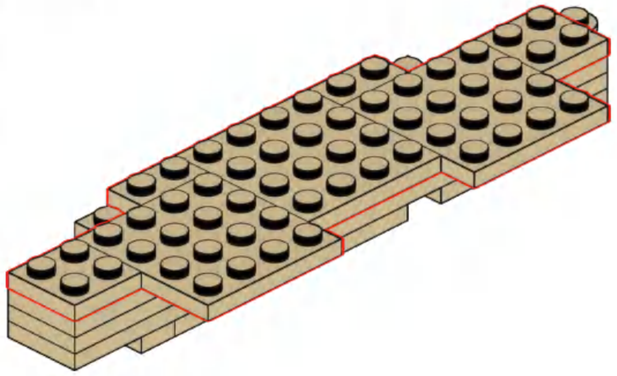

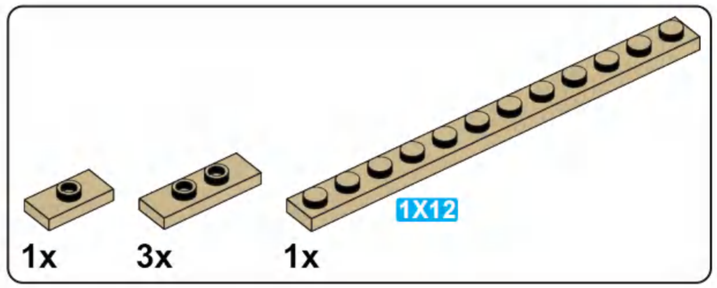

S21

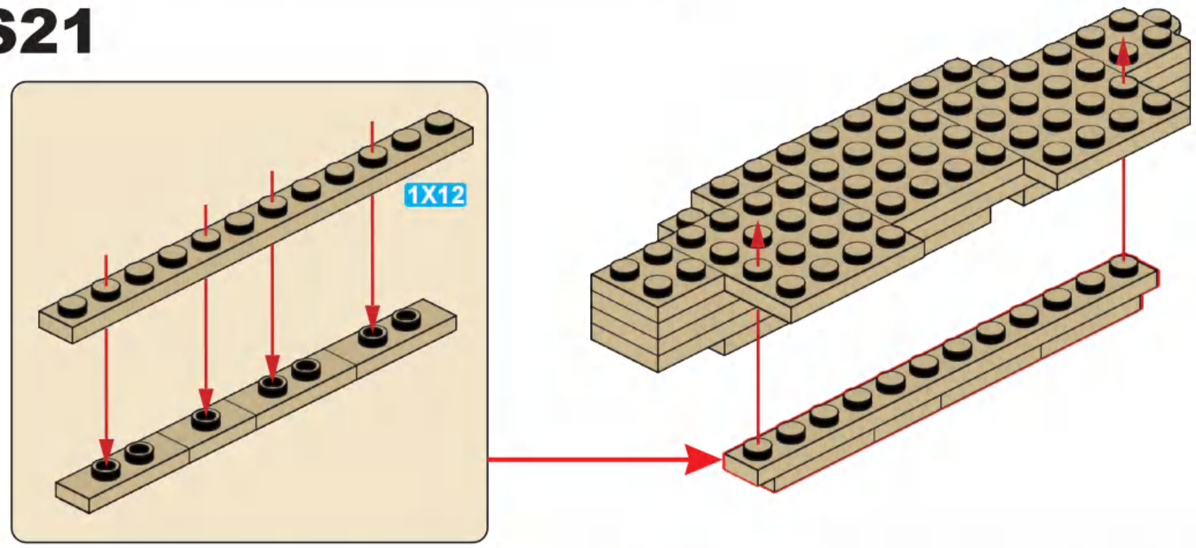

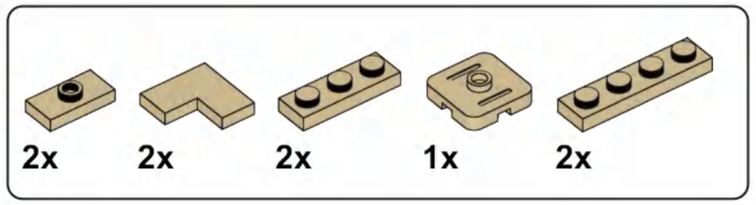

S22

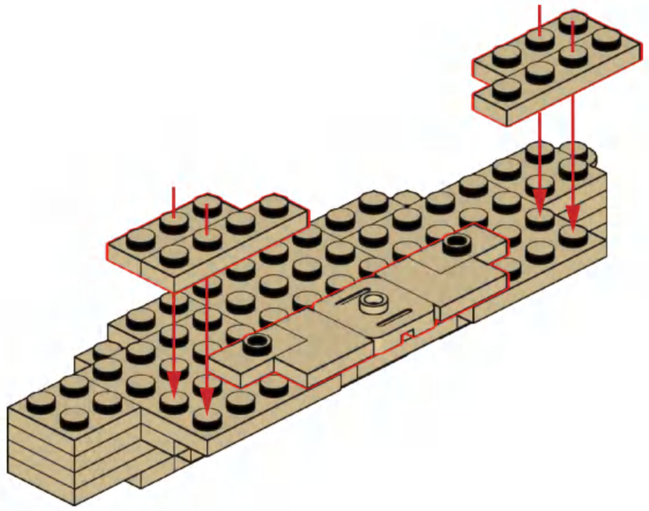

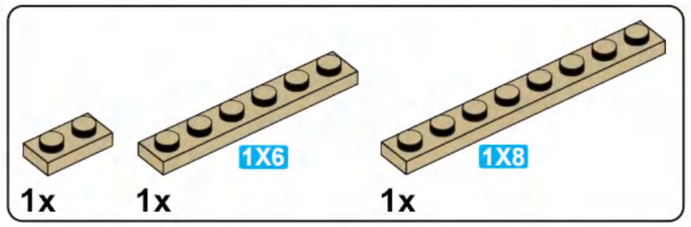

S23

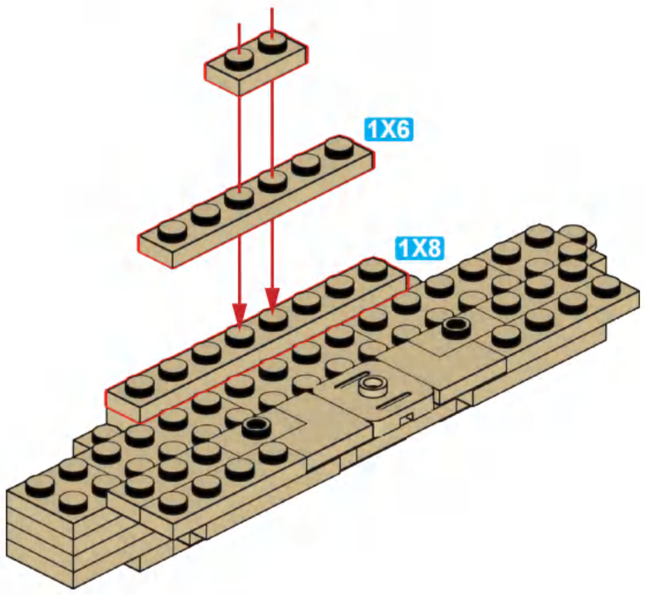

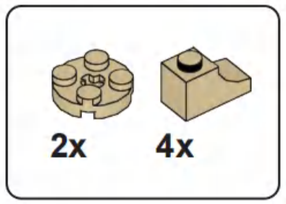

S24

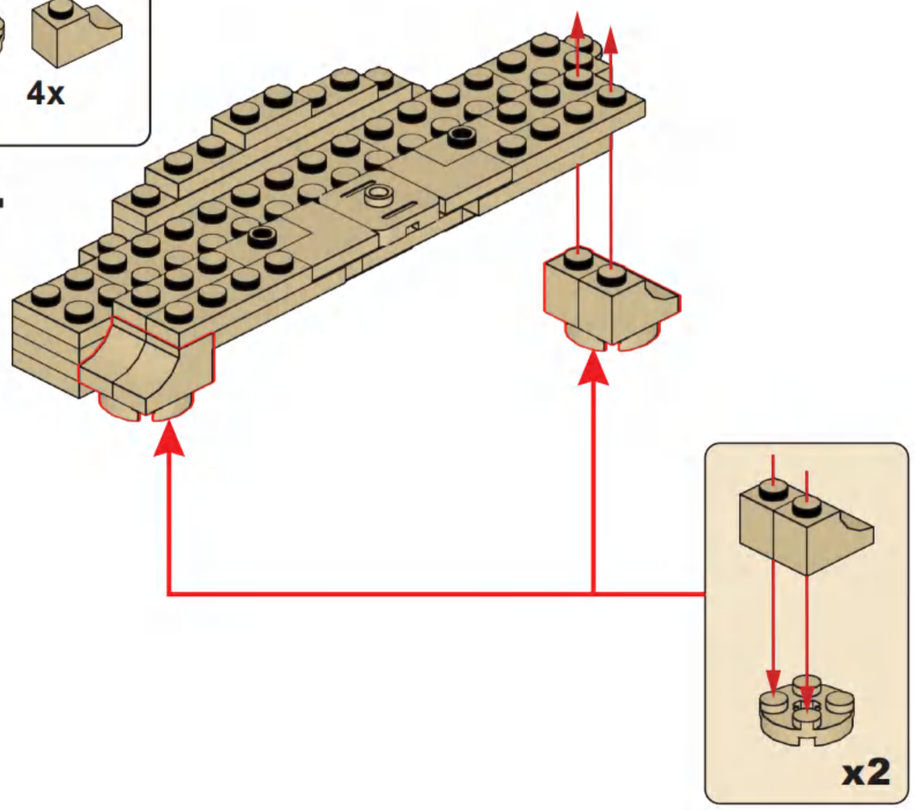

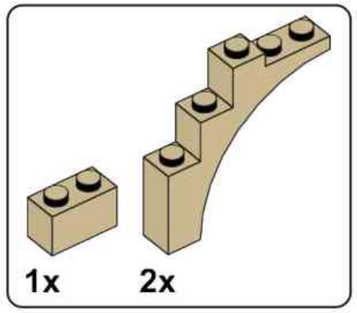

S25

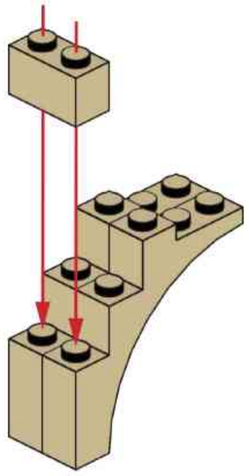

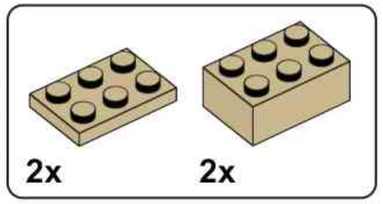

S26

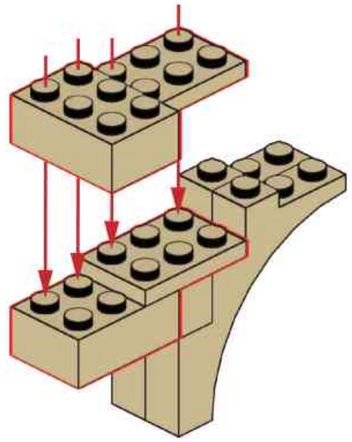

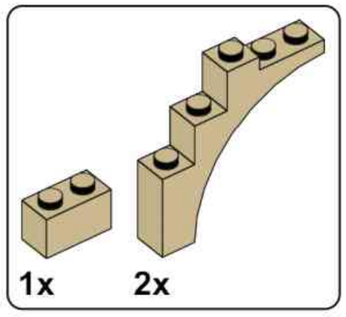

S27

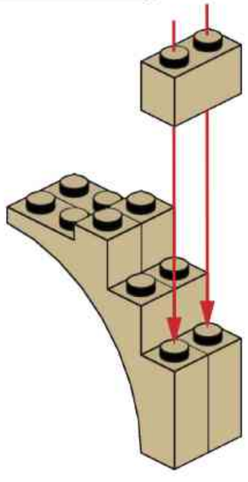

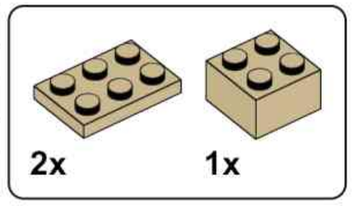

S28

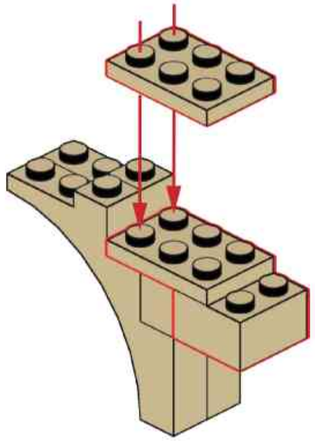

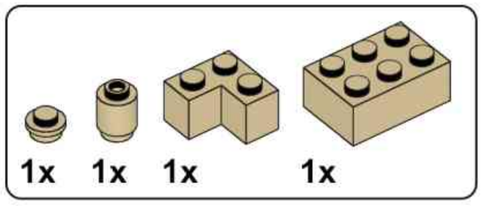

S29

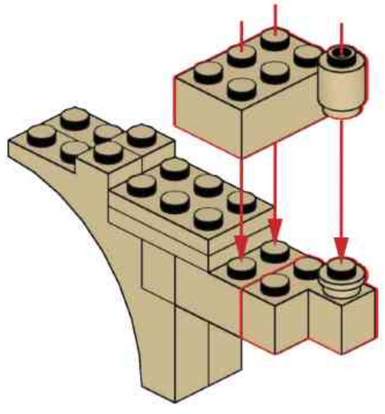

S30

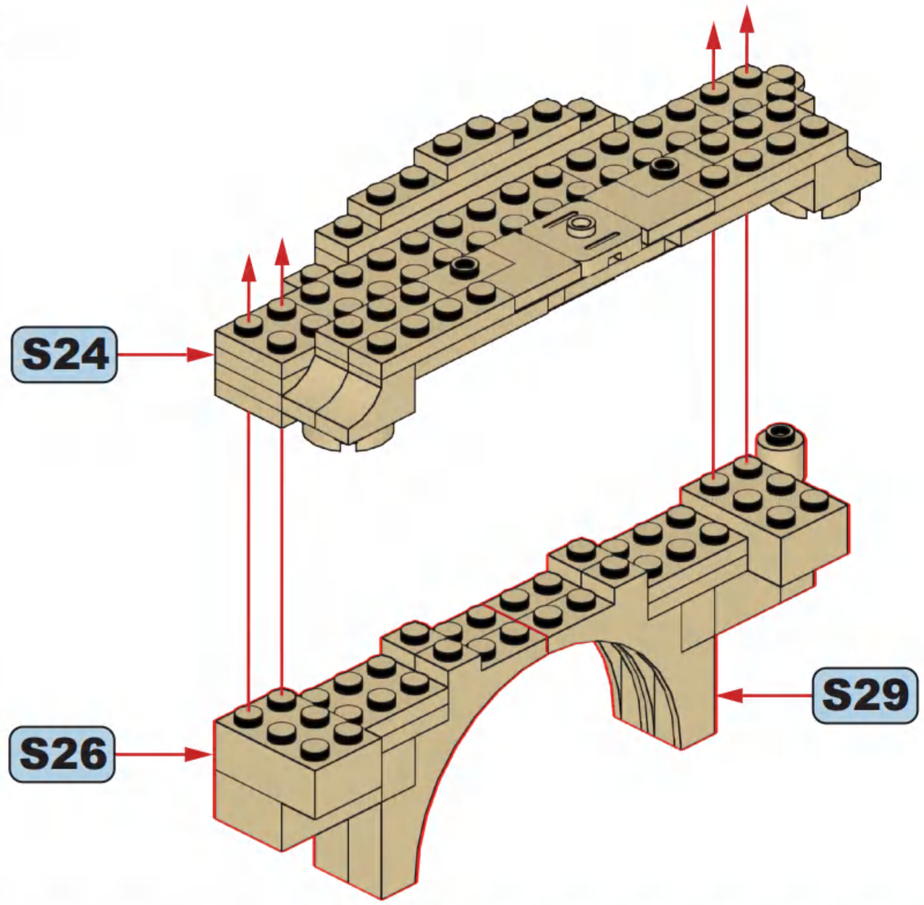

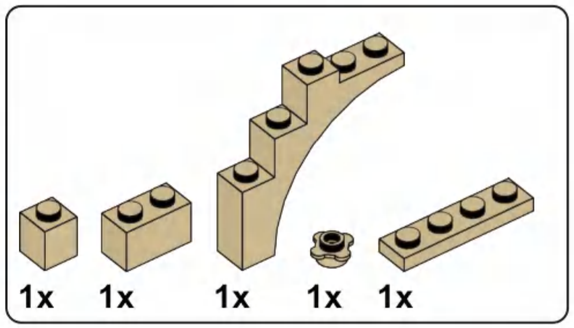

S31

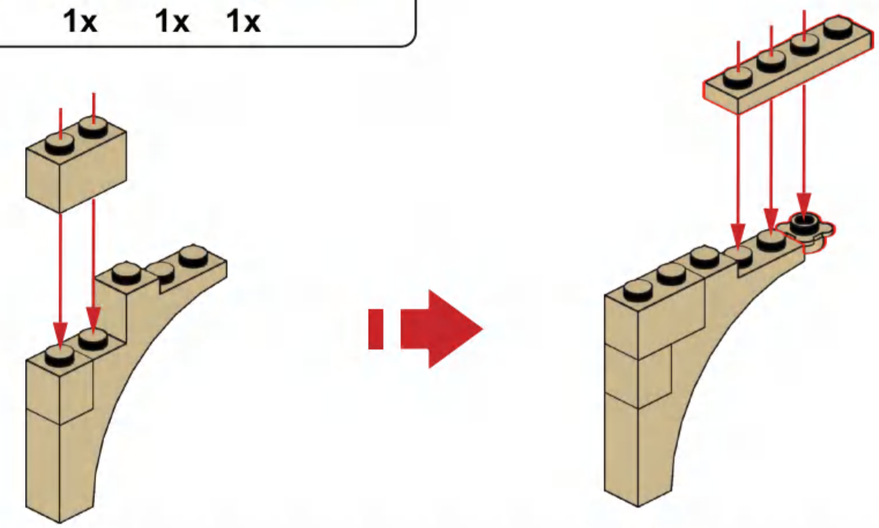

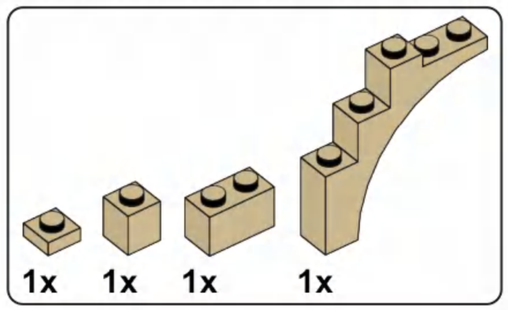

S32

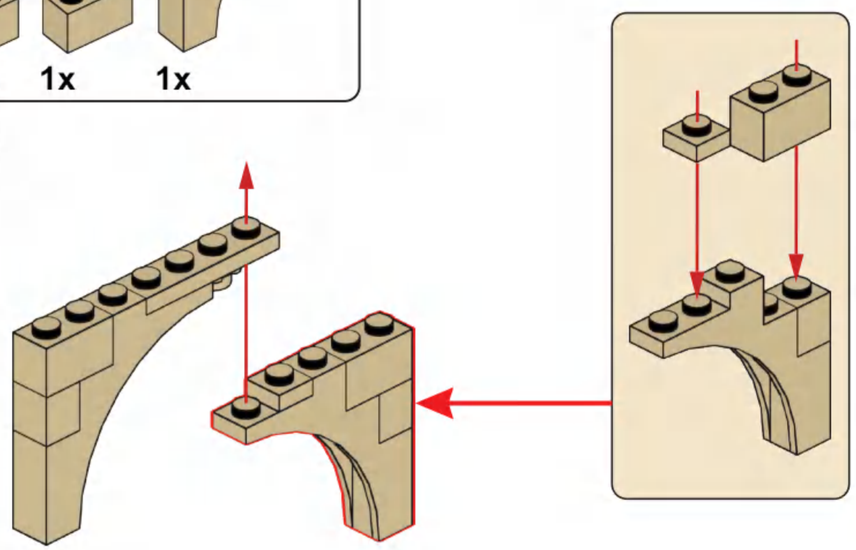

S33

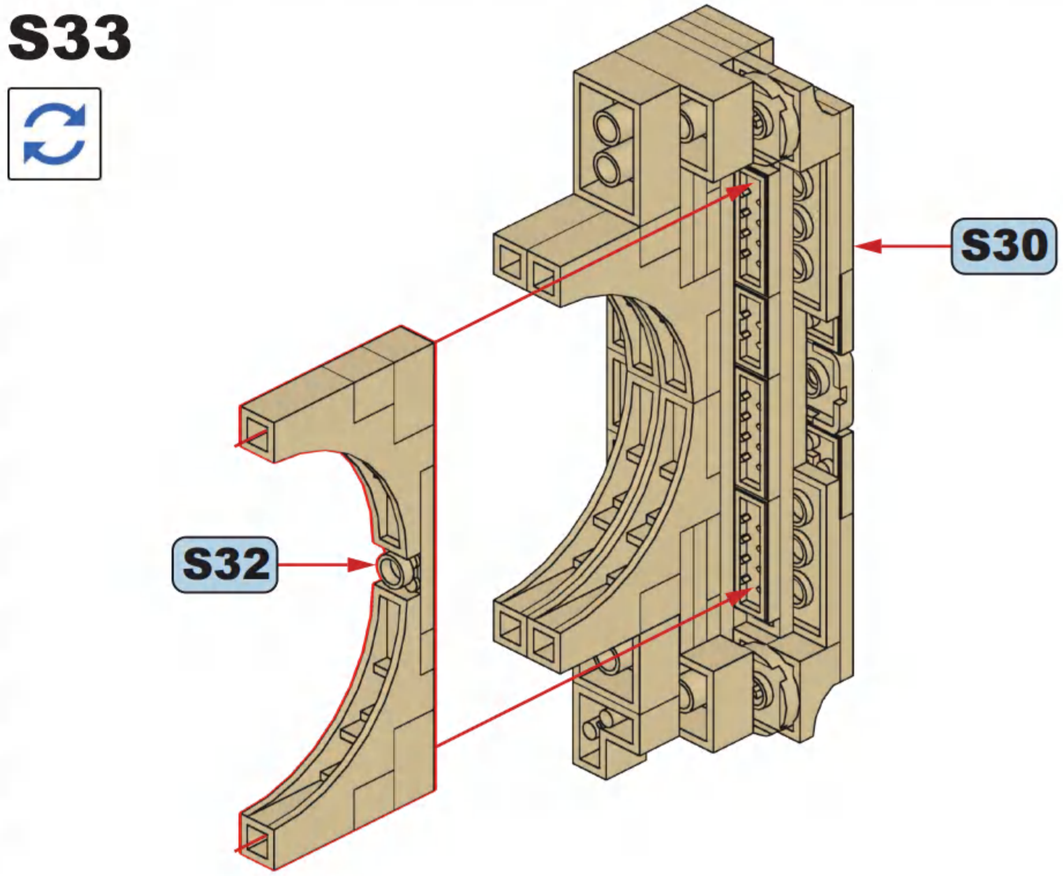

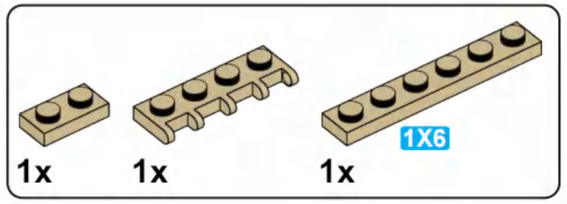

S34

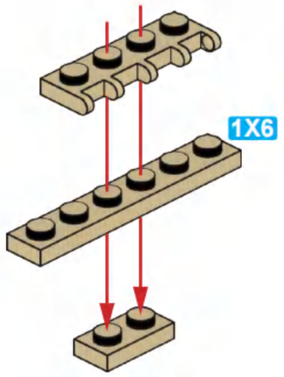

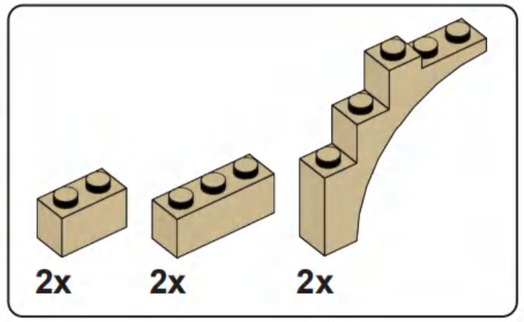

S35

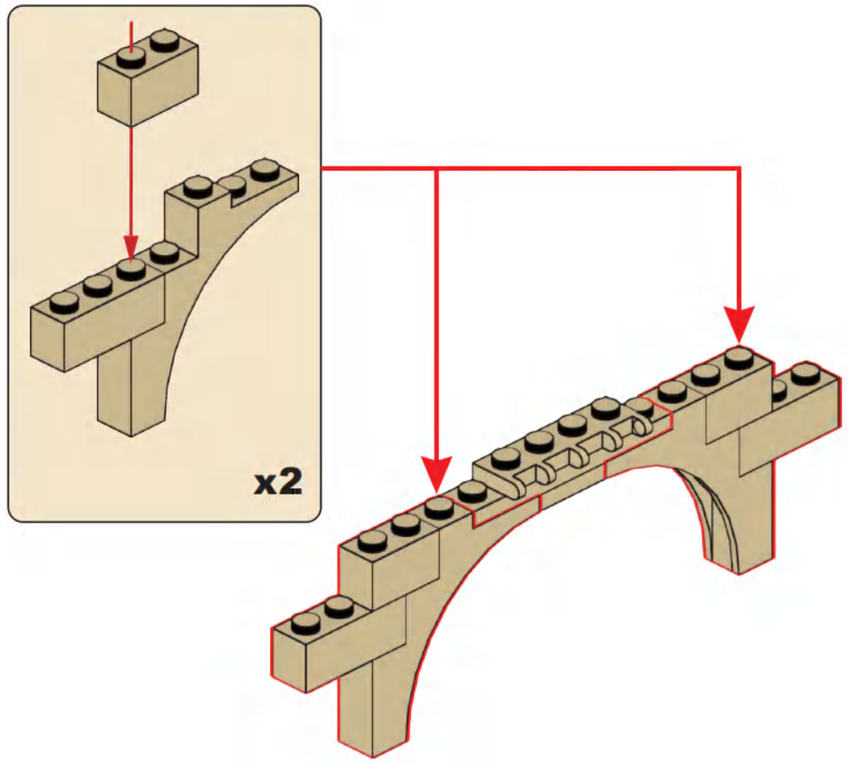

S36

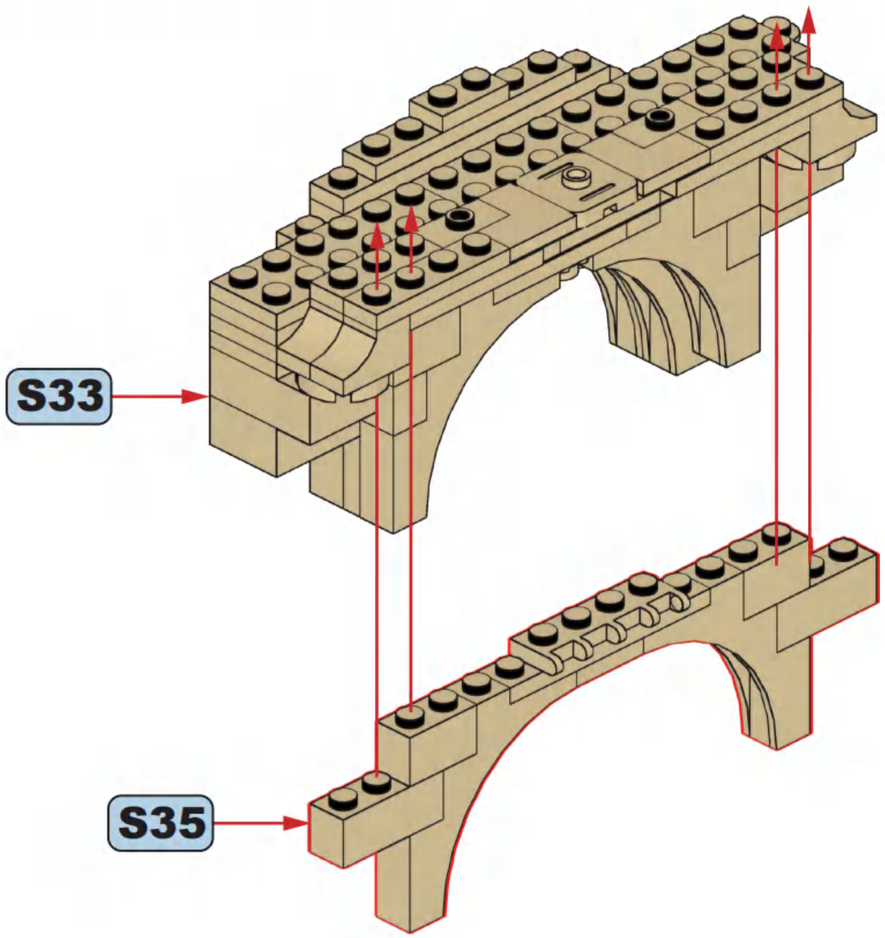

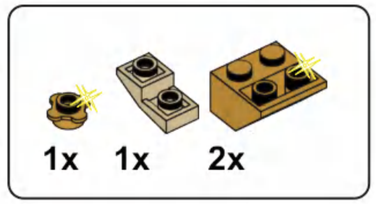

S37

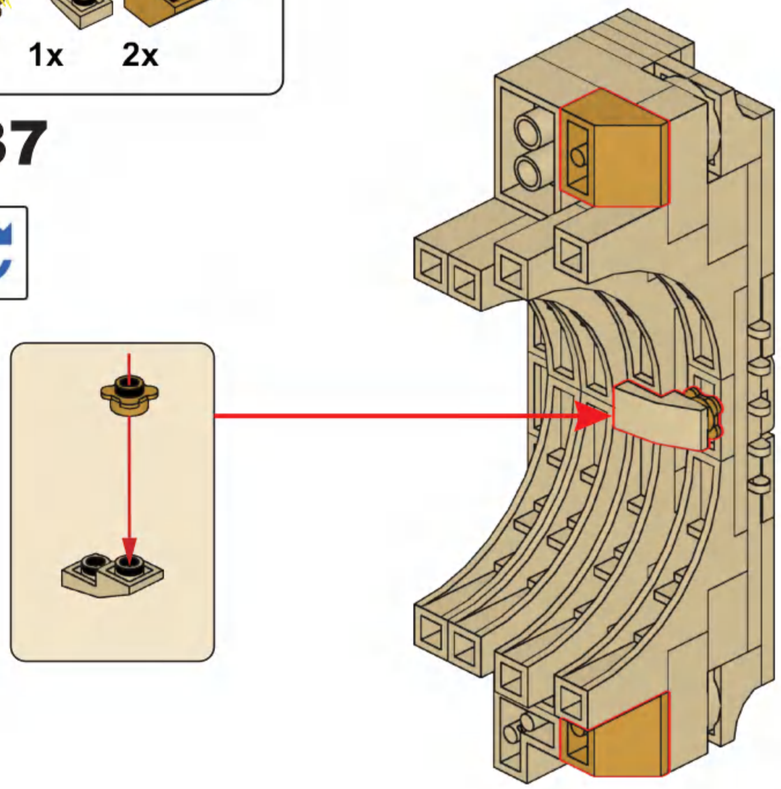

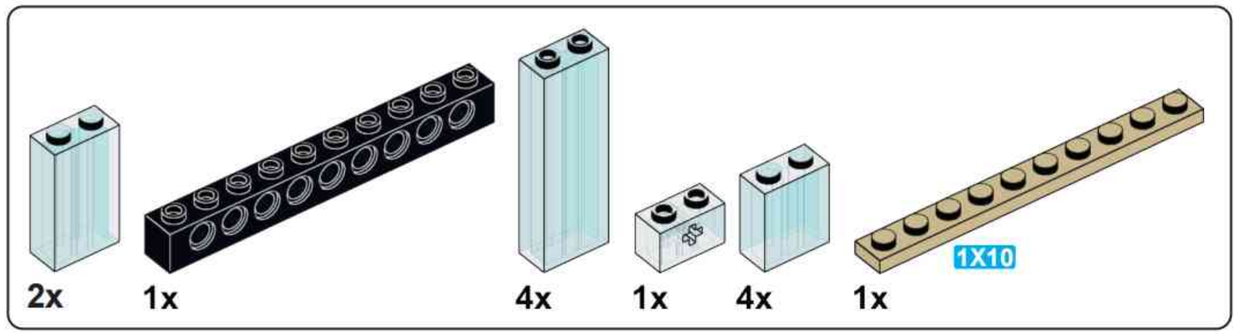

S38

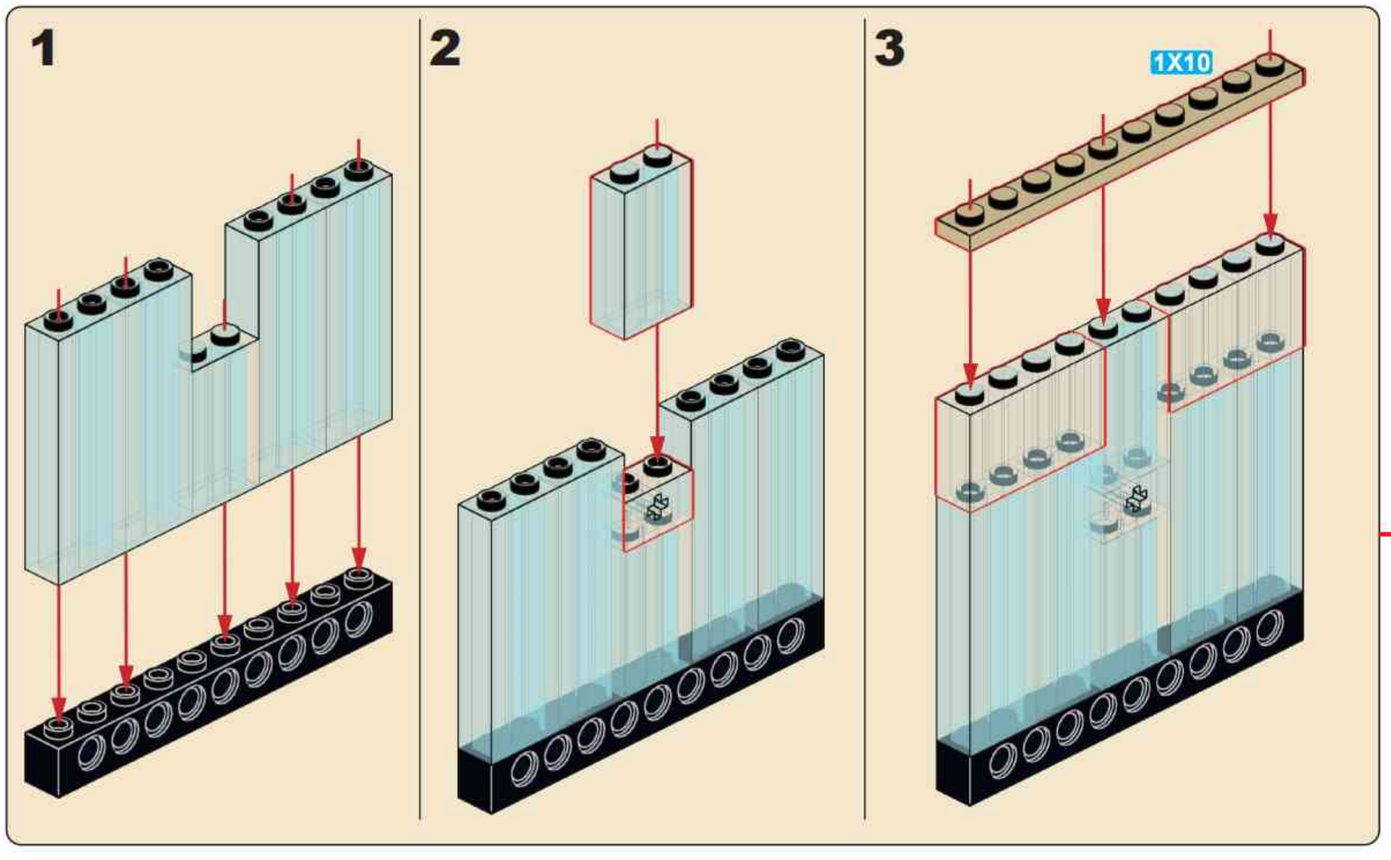

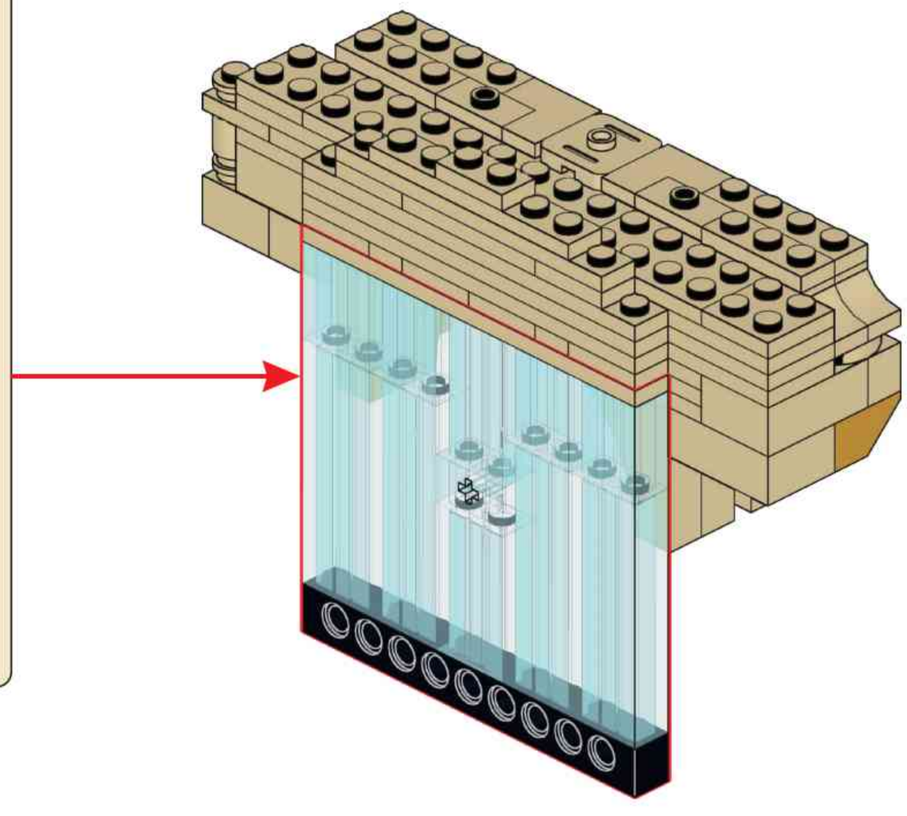

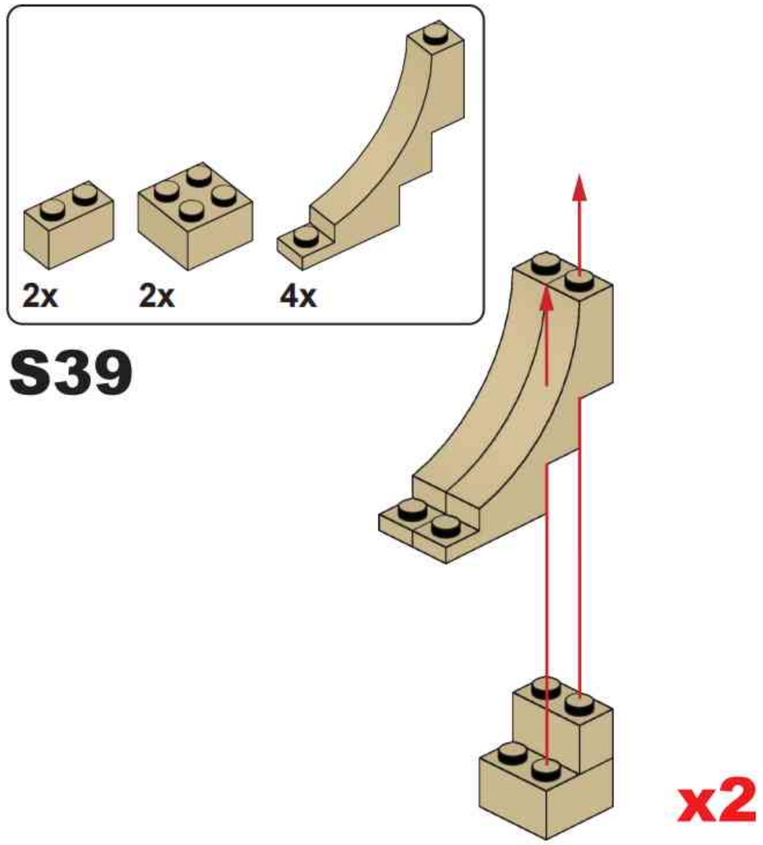

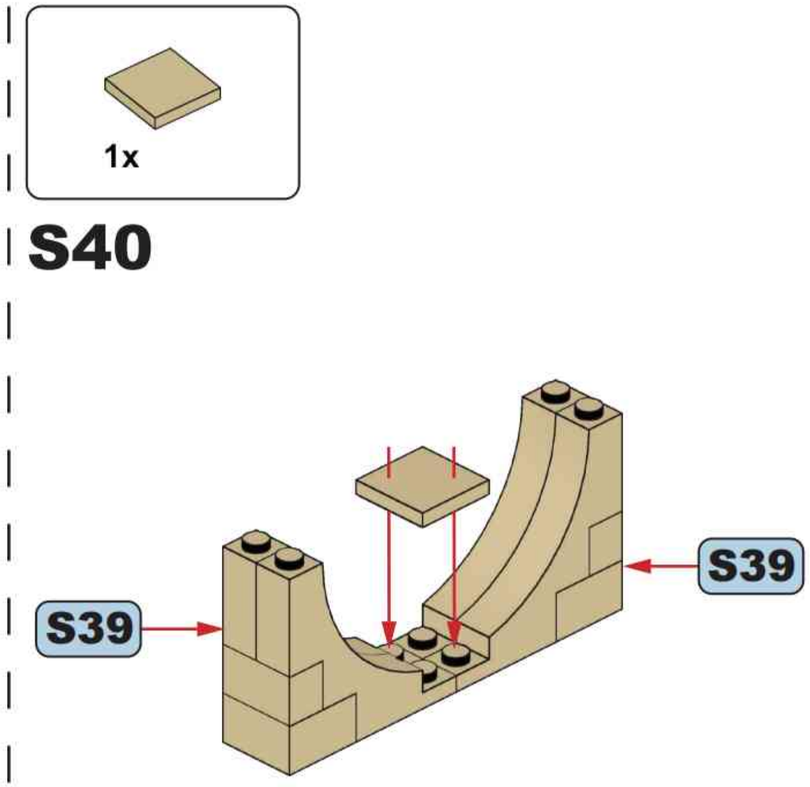

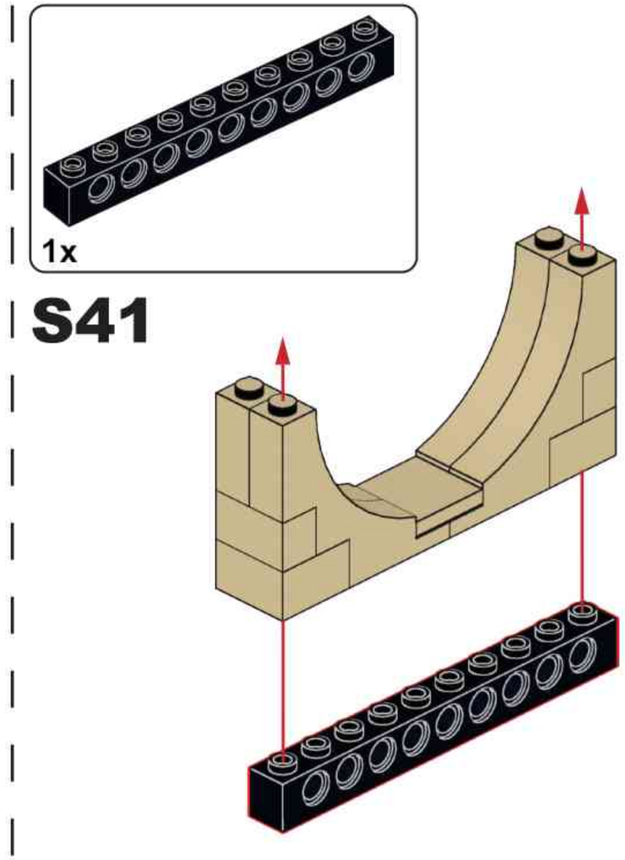

S42

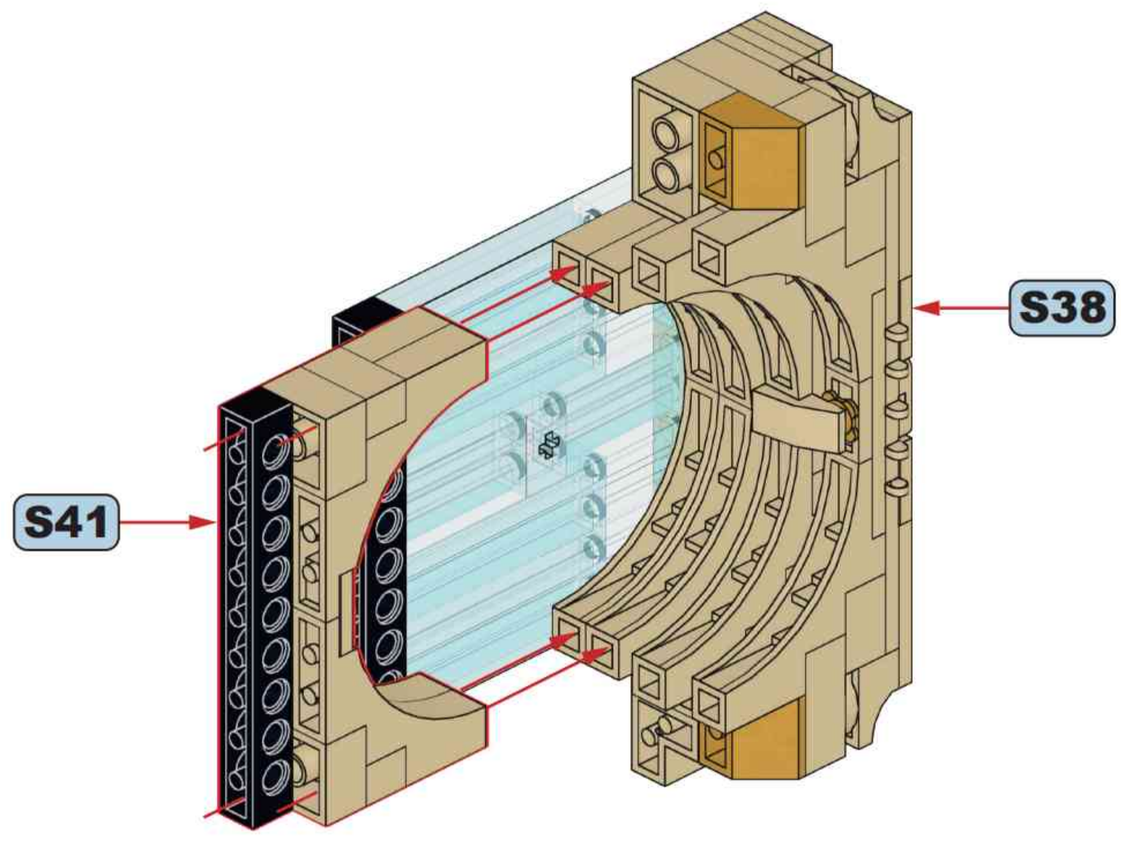

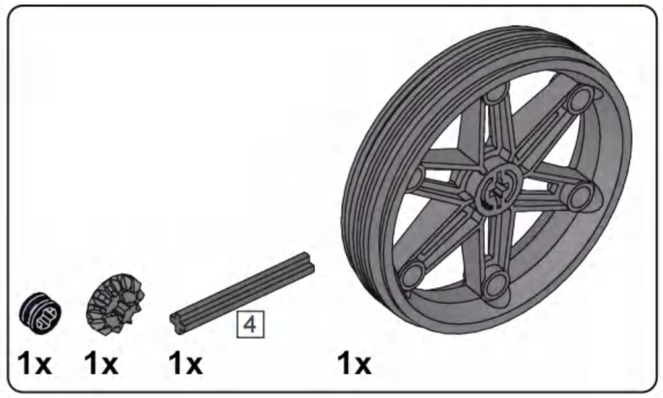

S43

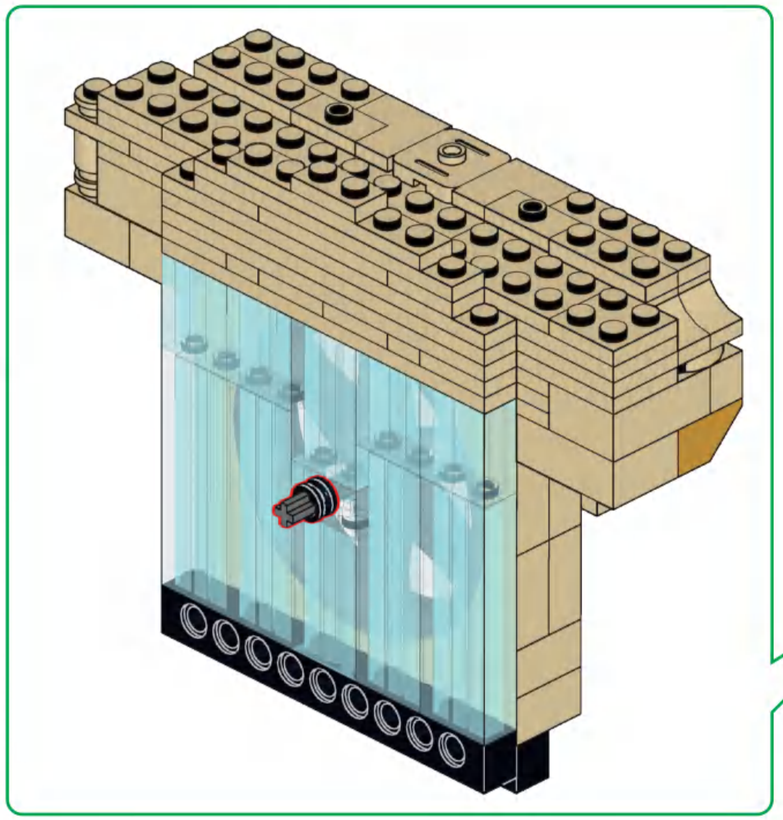

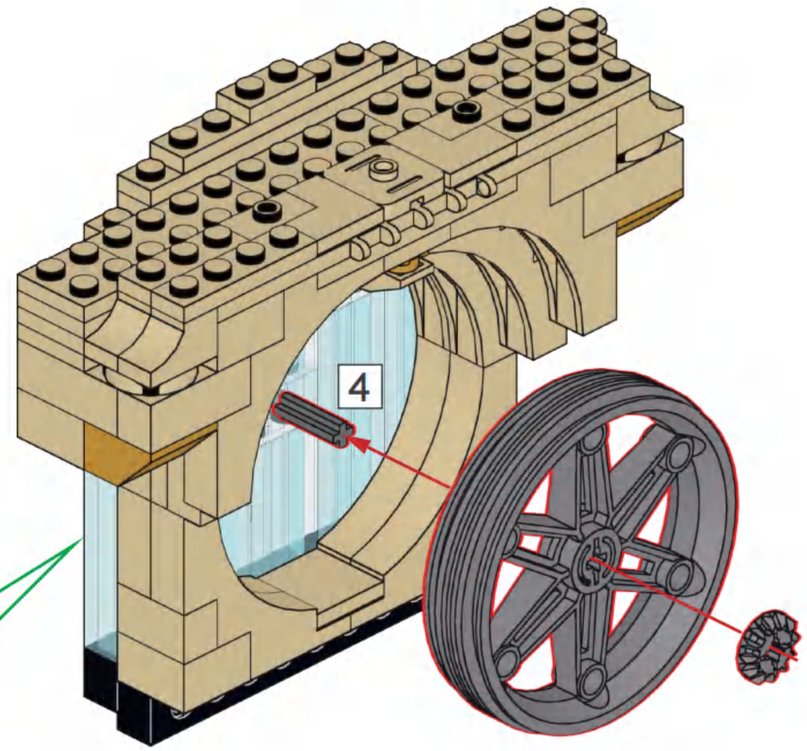

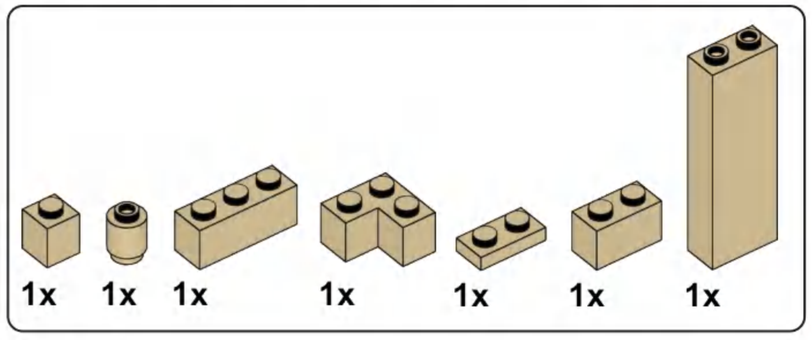

S44

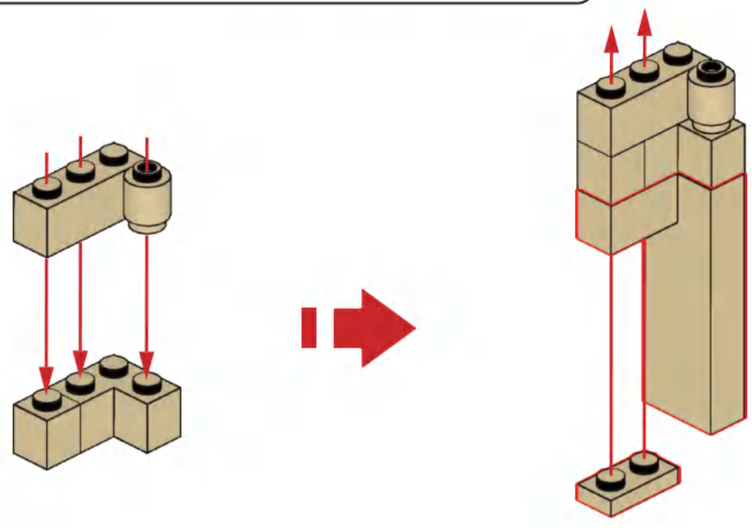

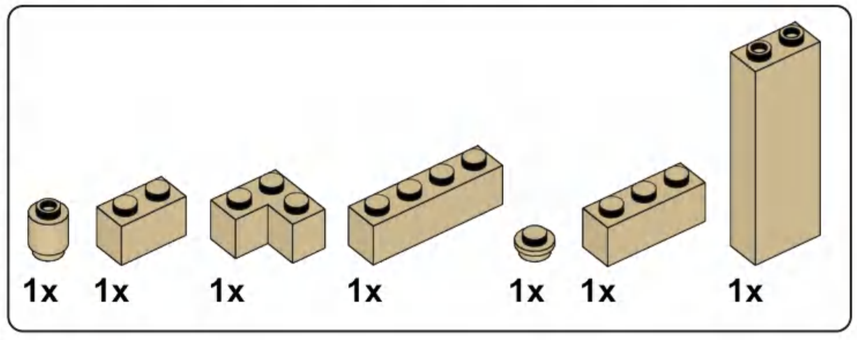

S45

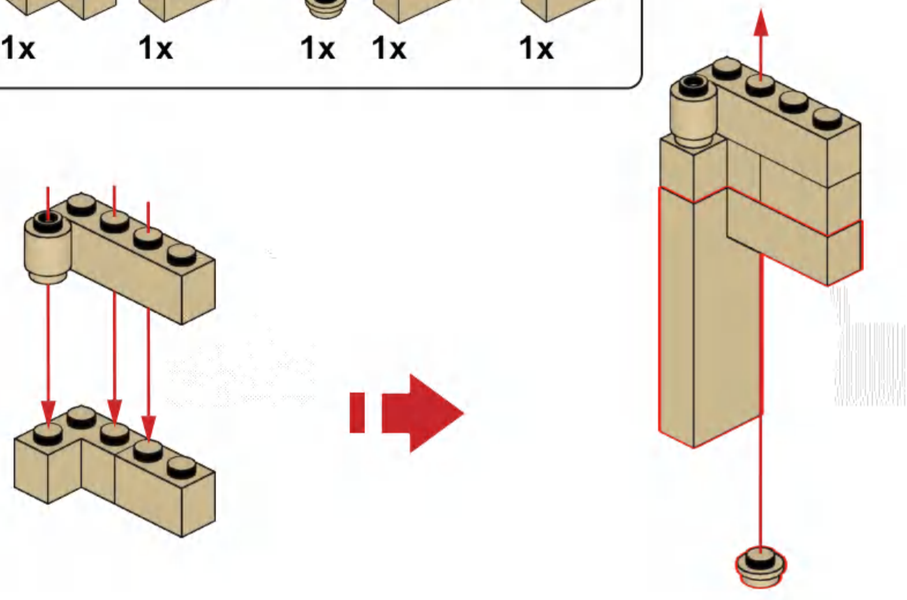

S46

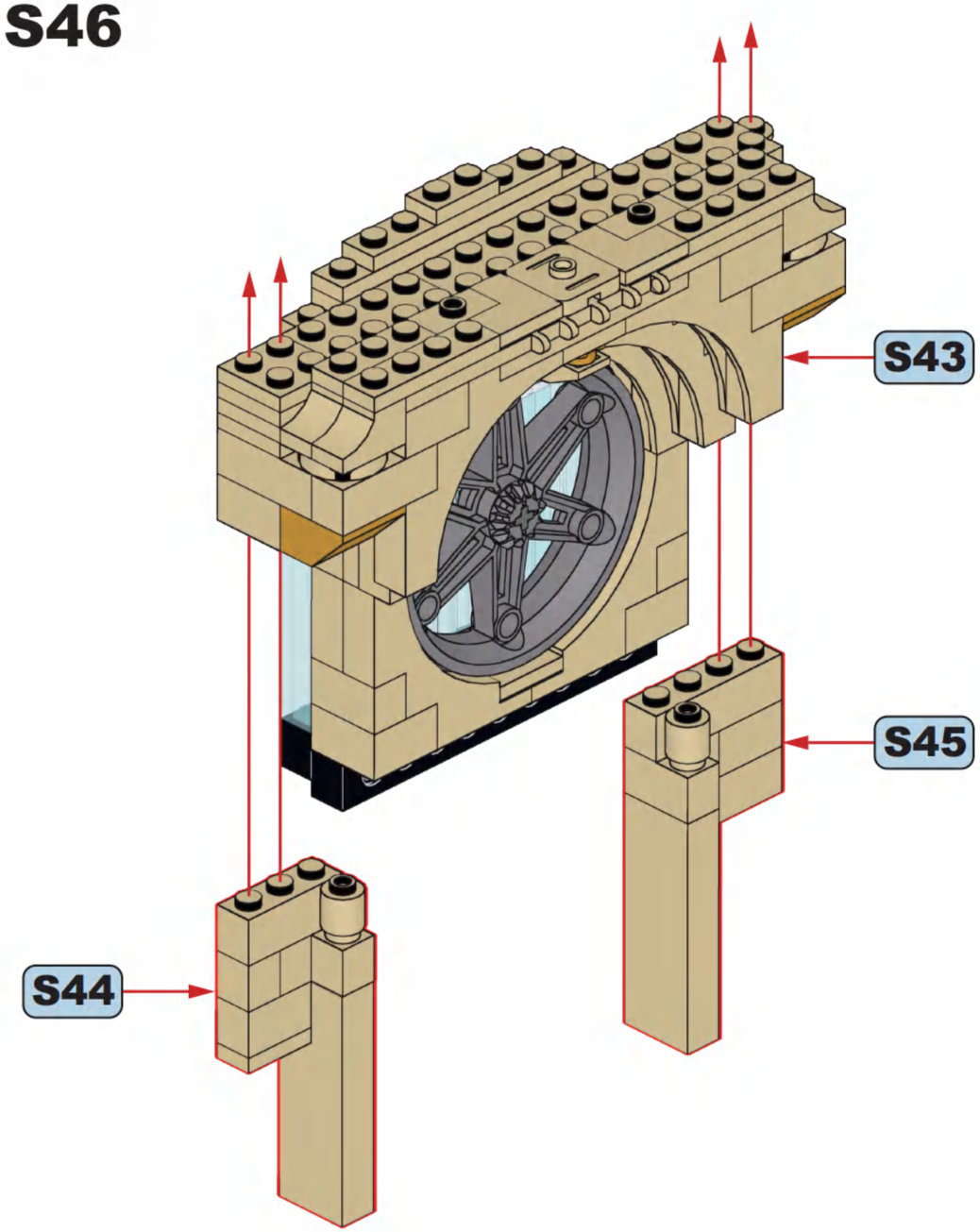

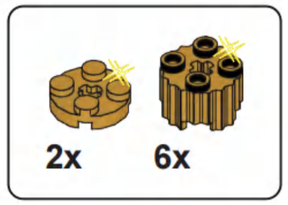

S47

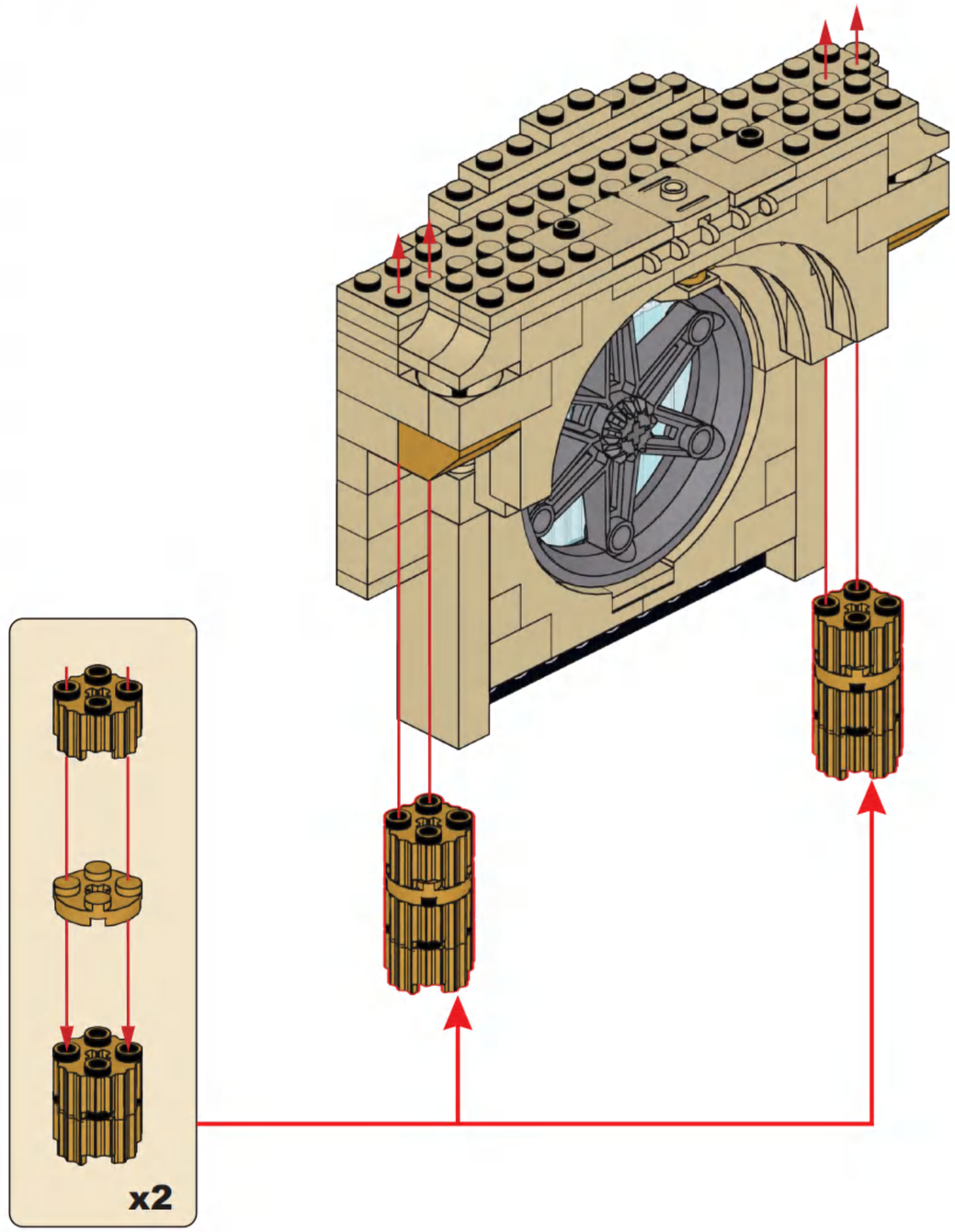

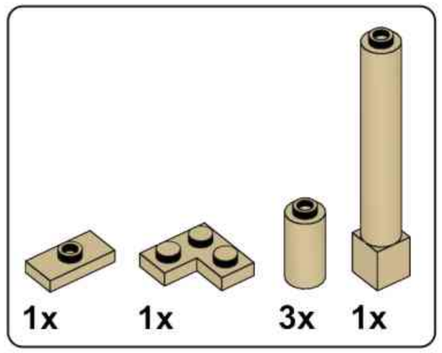

S48

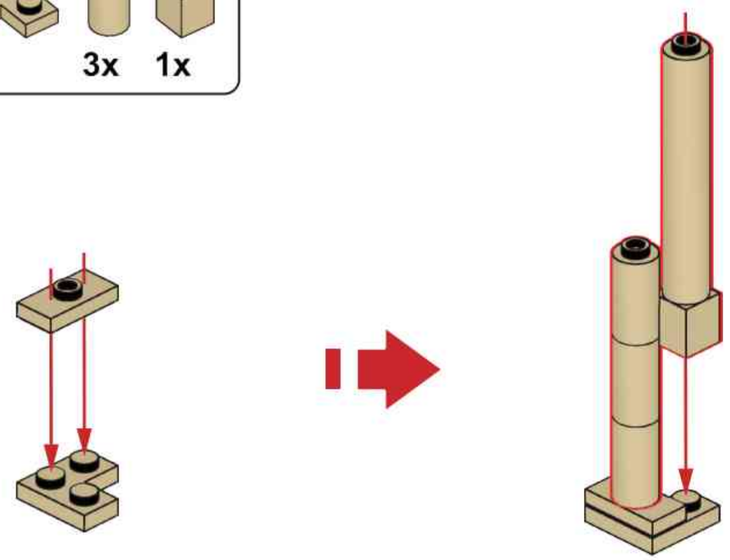

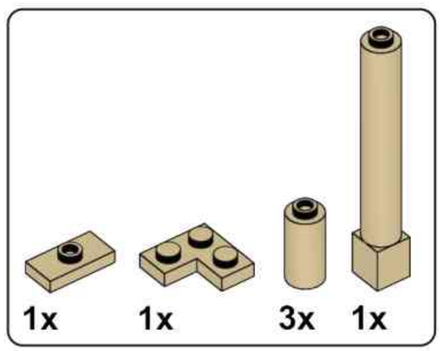

S49

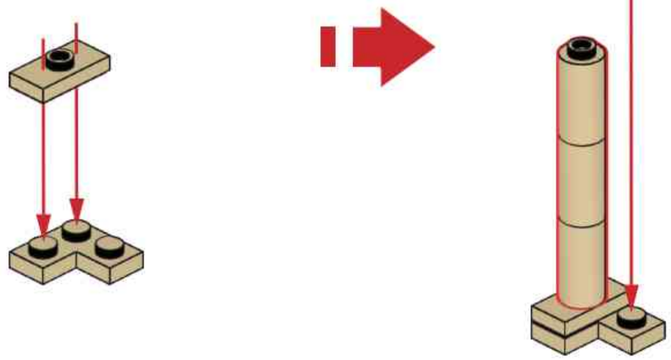

S50

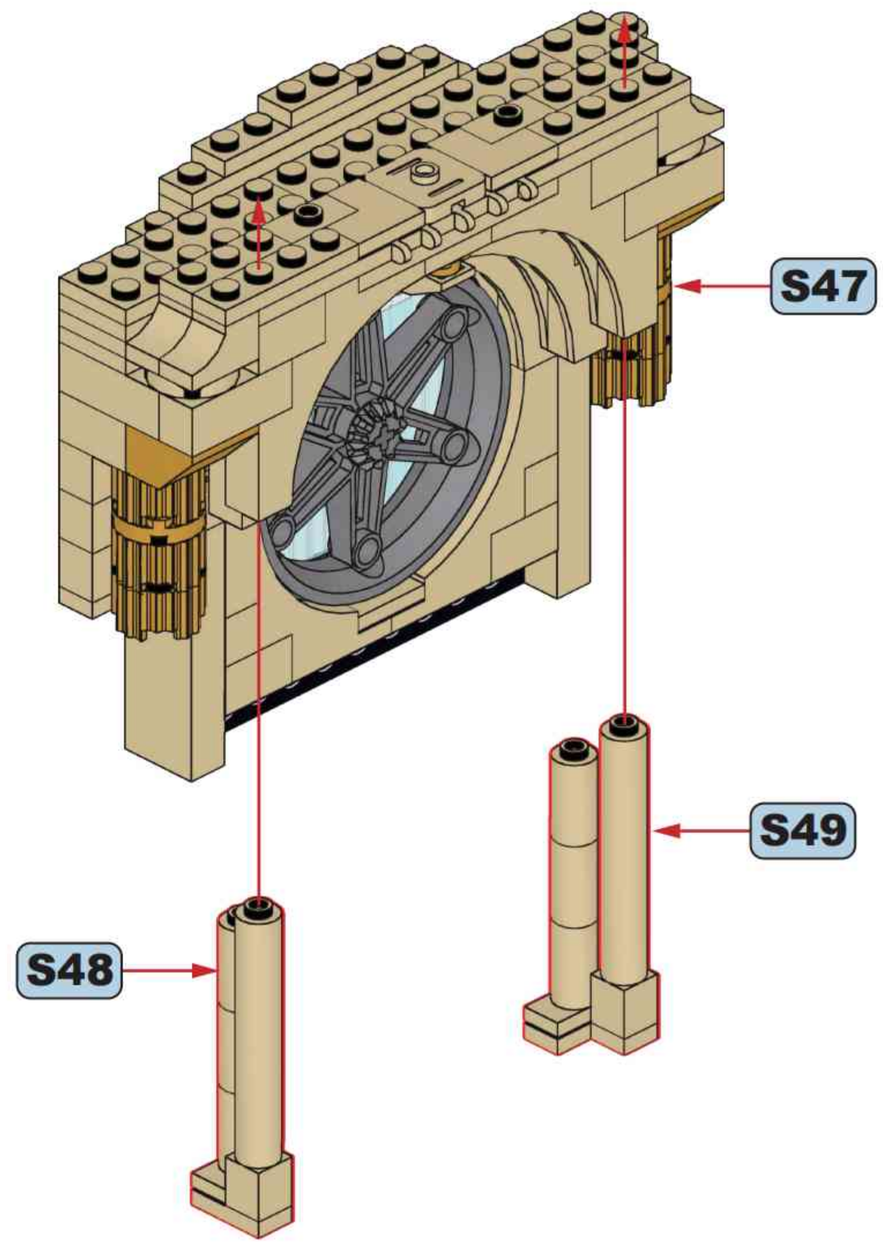

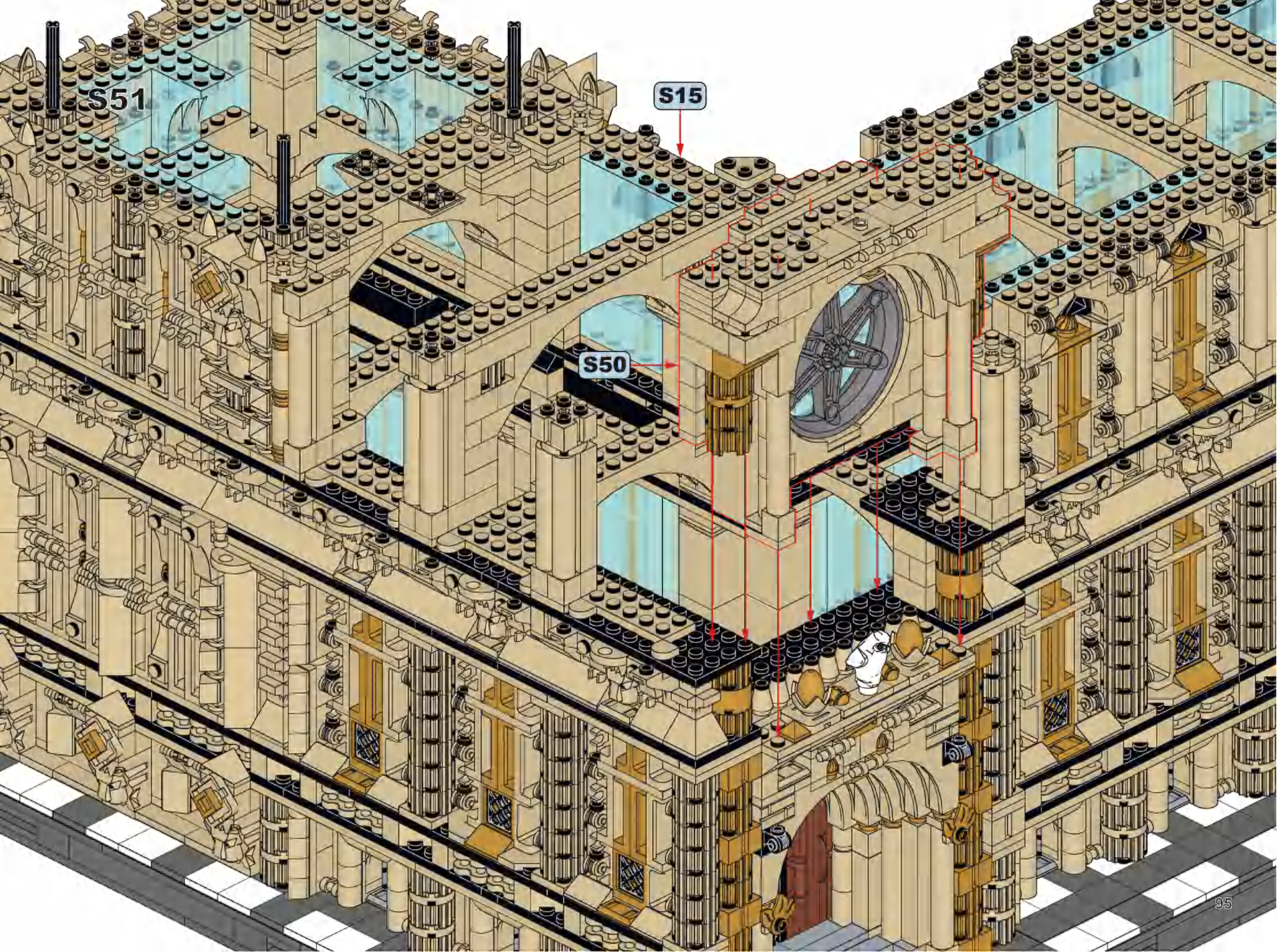
S51
S15
S50

20

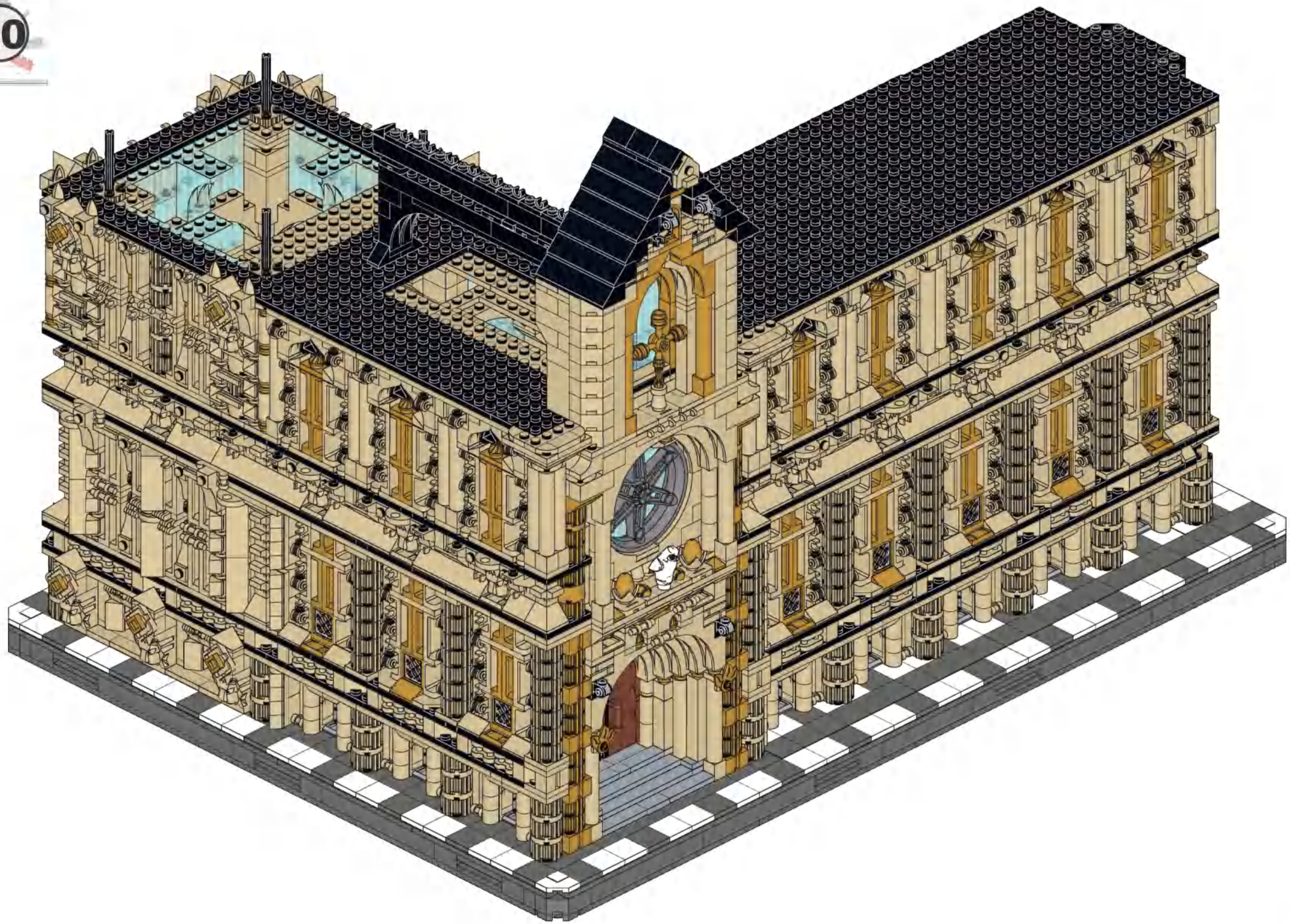

T

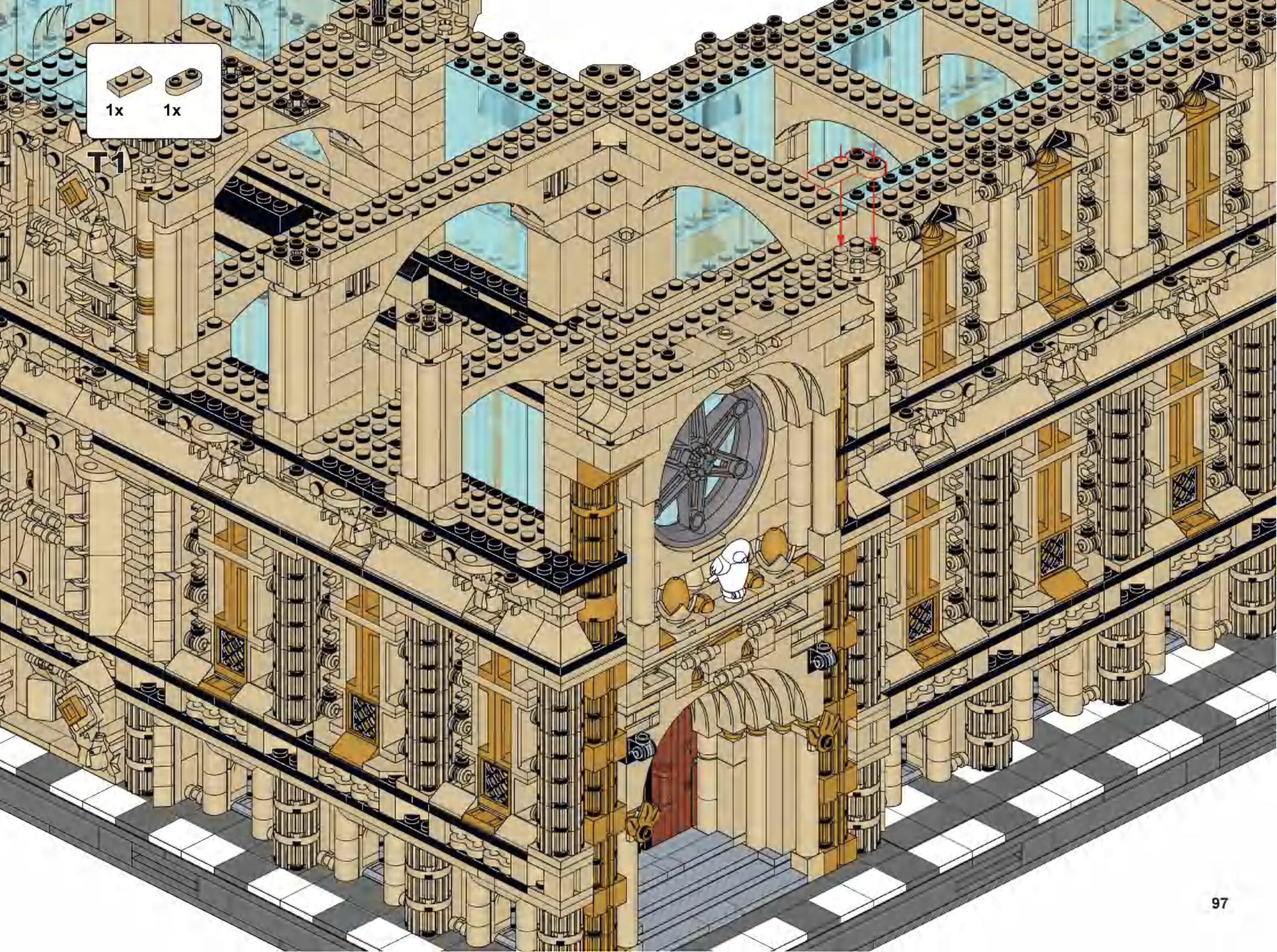
1x
1x
T1

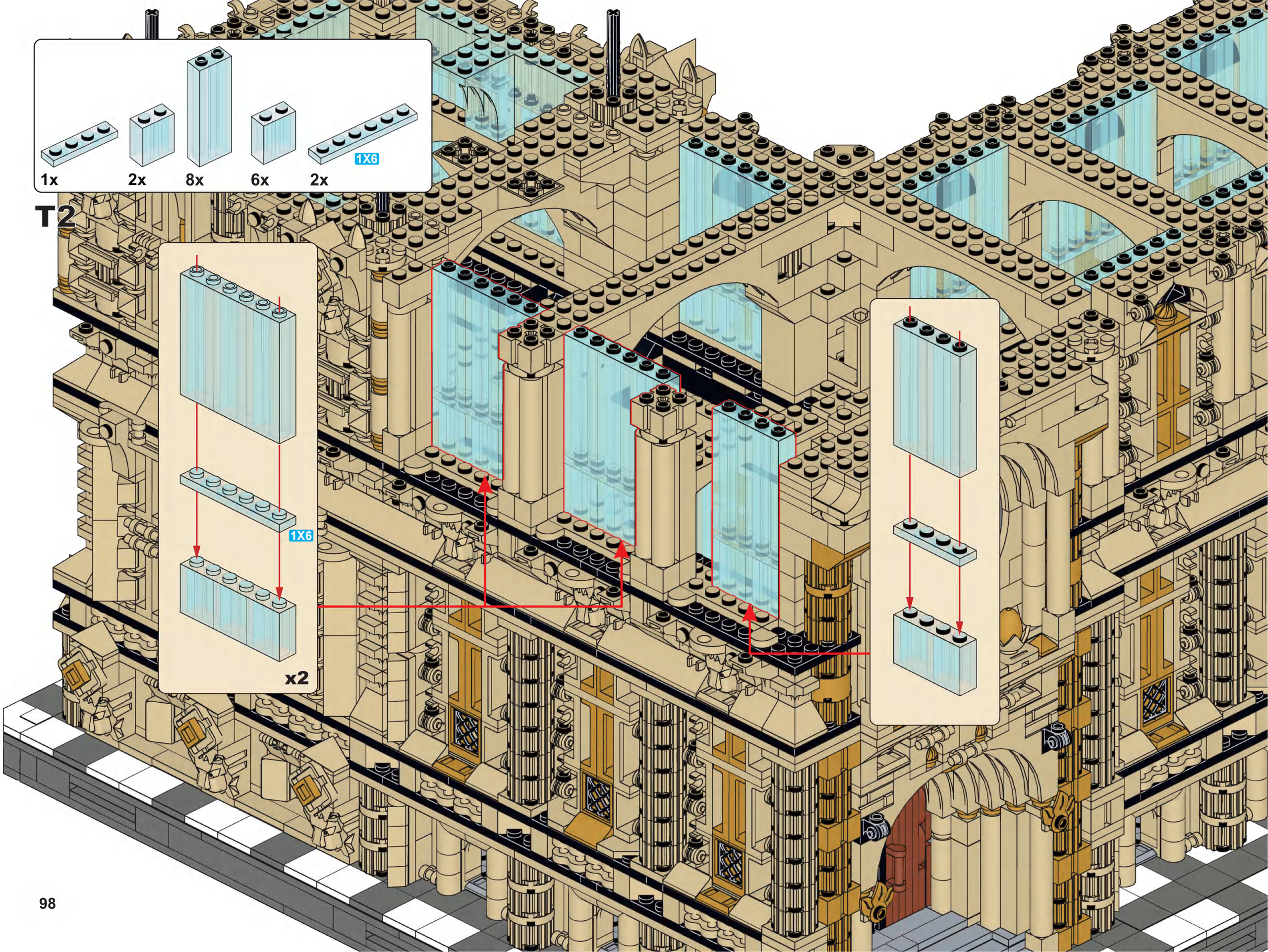
1x
2x
8x
6x
2x
1X6
T2
1X6
x2

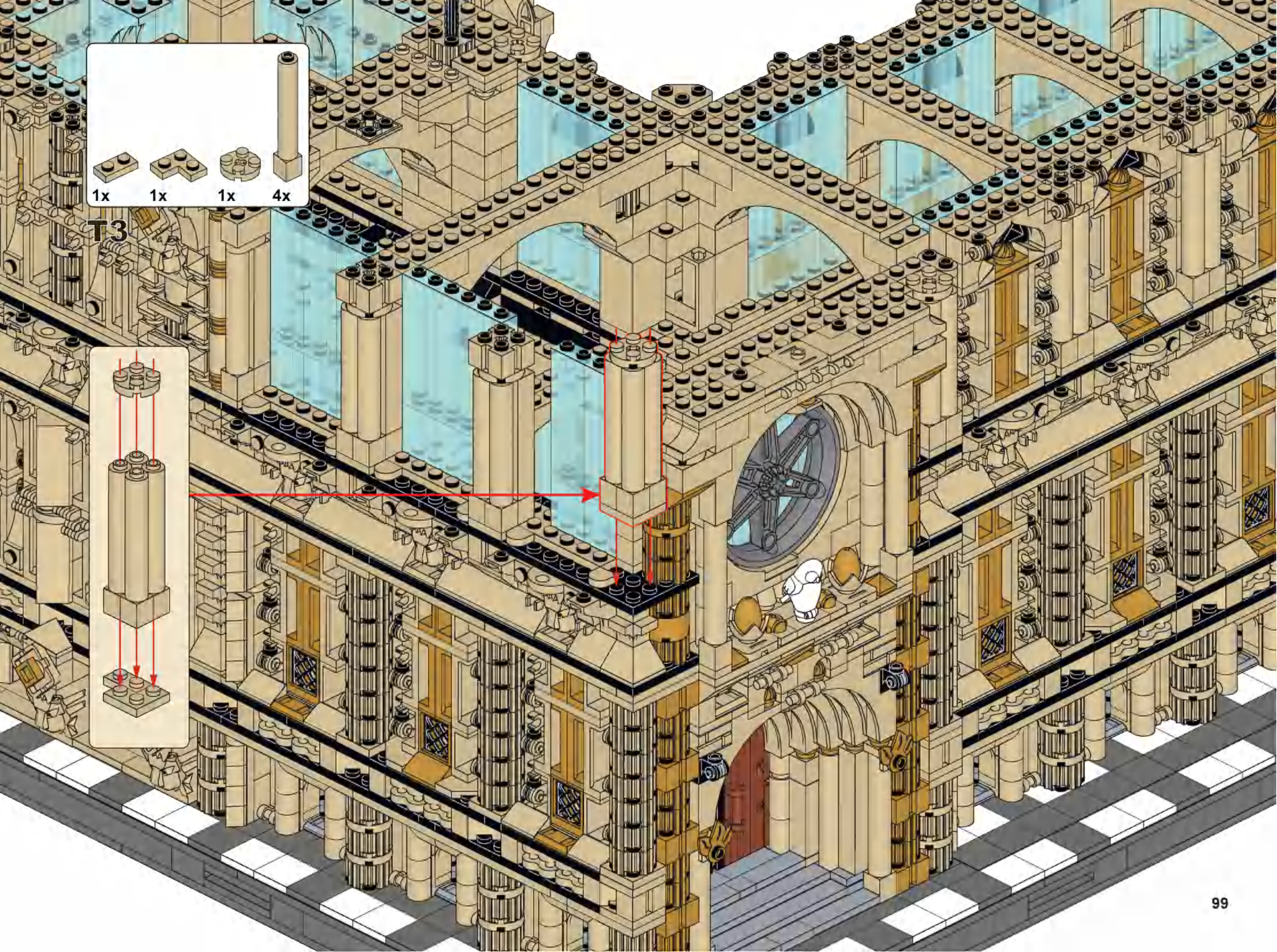
1x
1x
1x
4x
T3

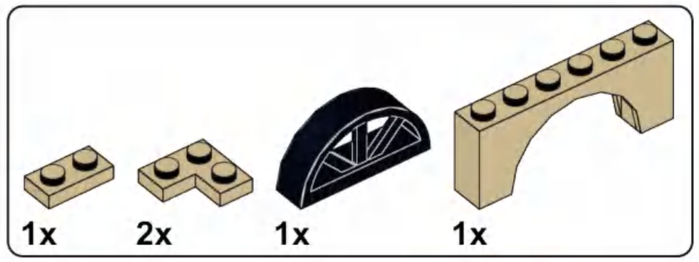

T4

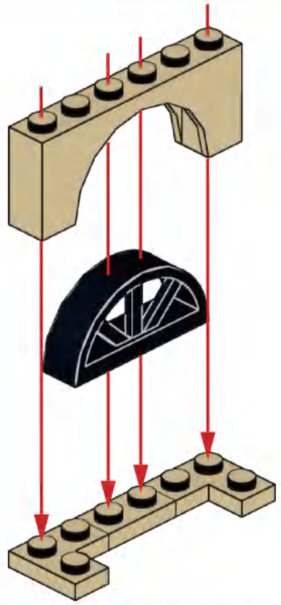

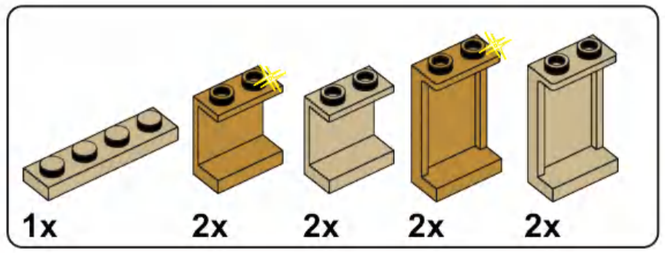

T5

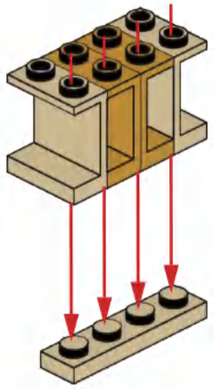

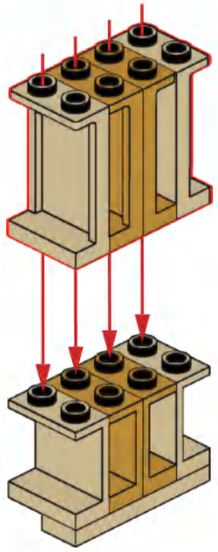

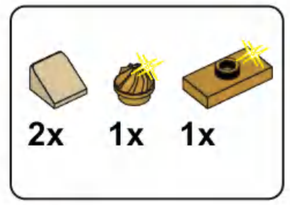

T7

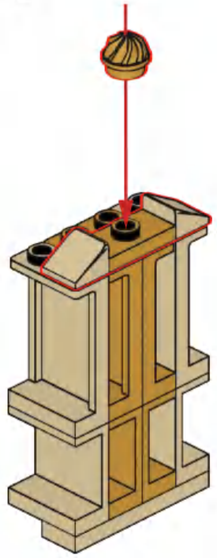

T8

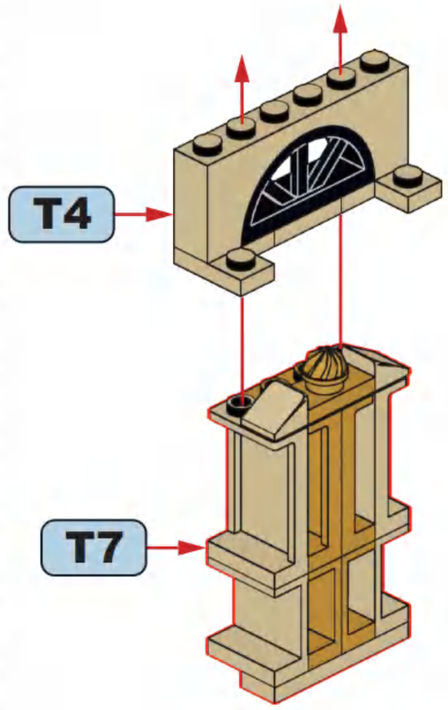

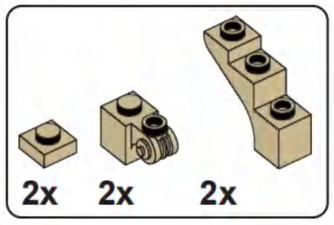

T9

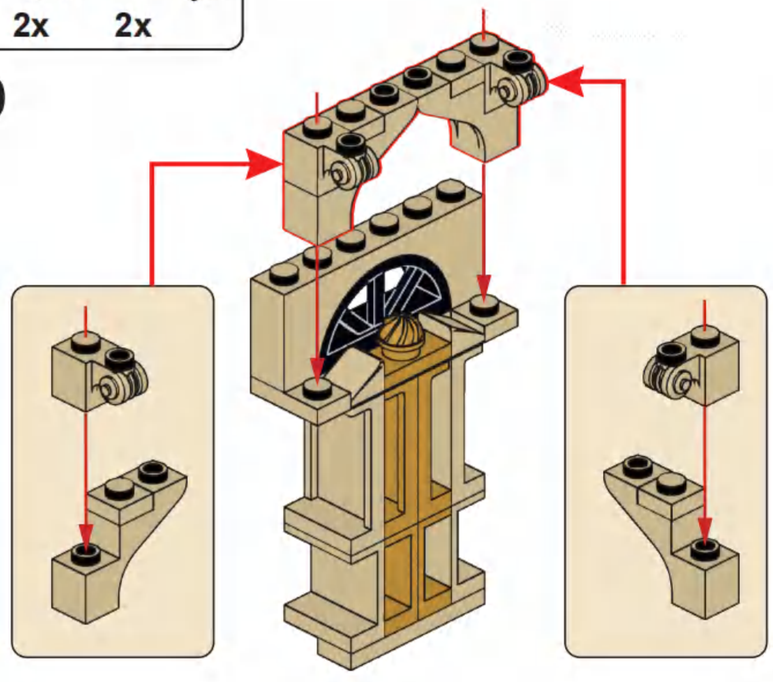

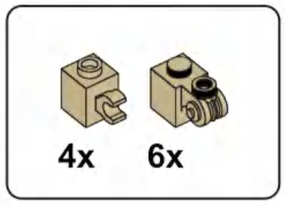

T10

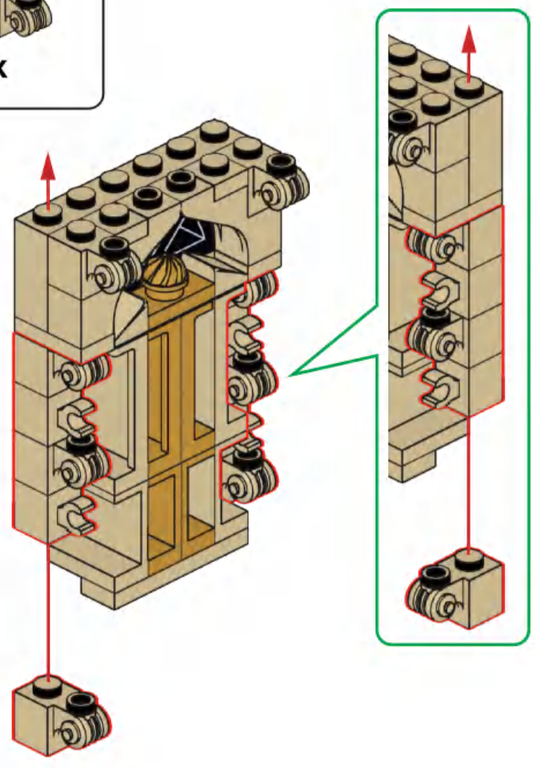

T11

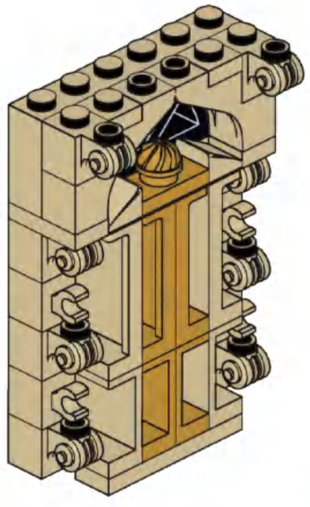

x3