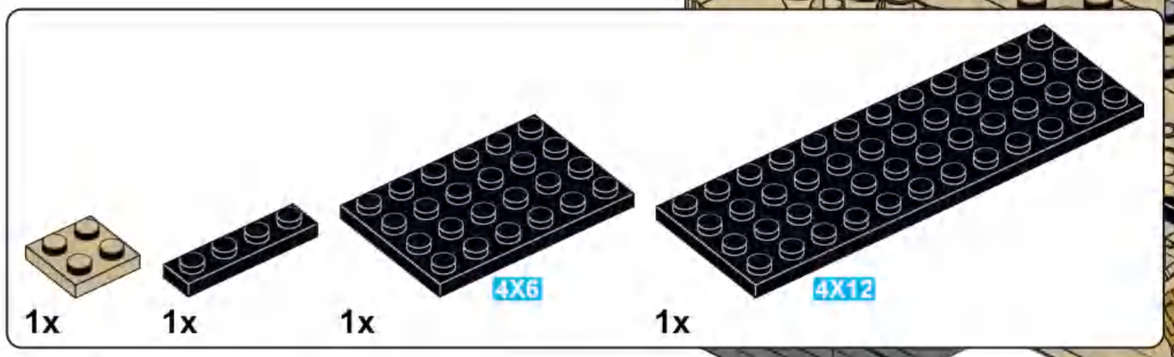

G1

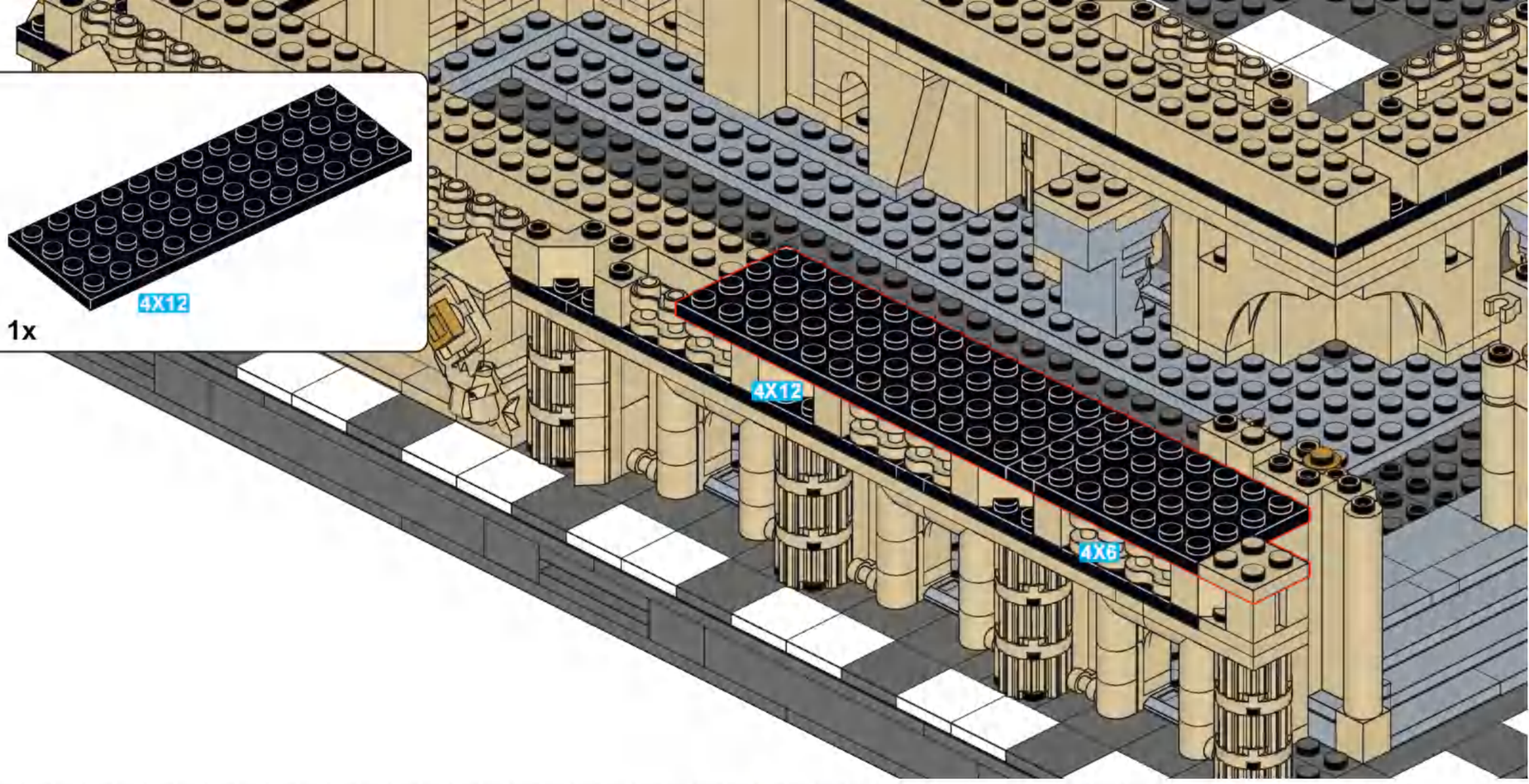

G2

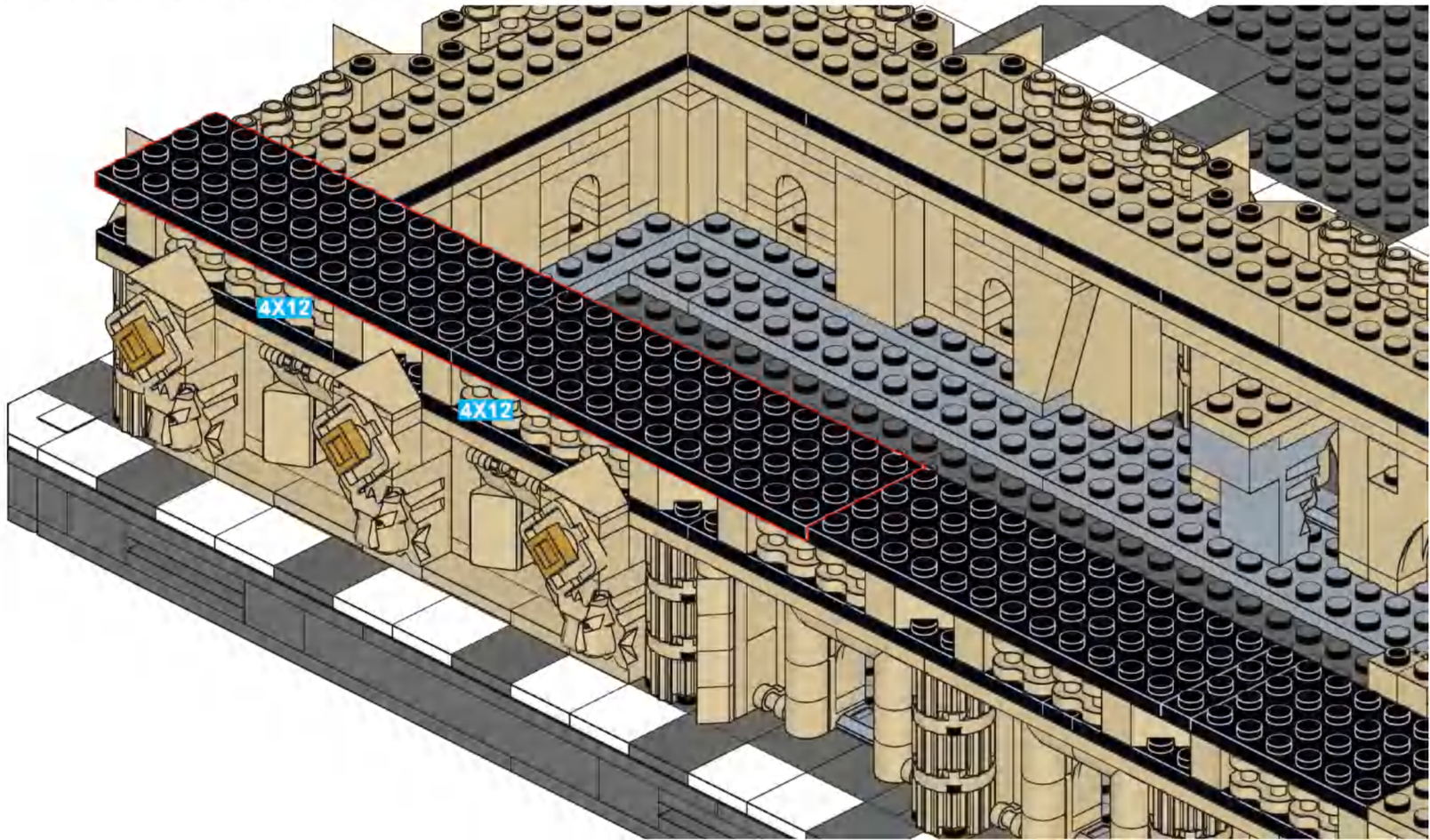

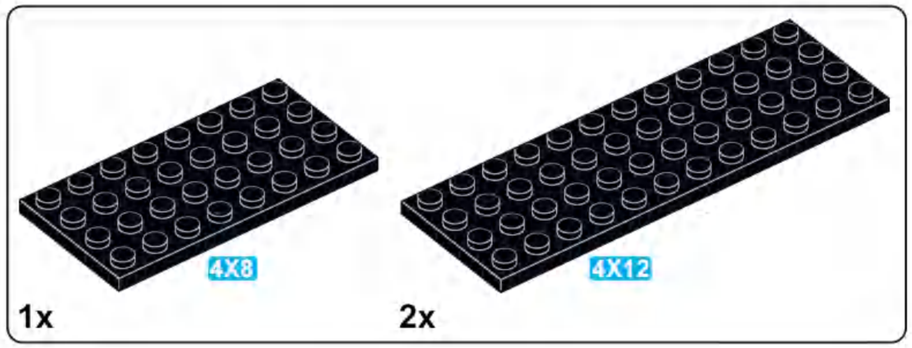

G3

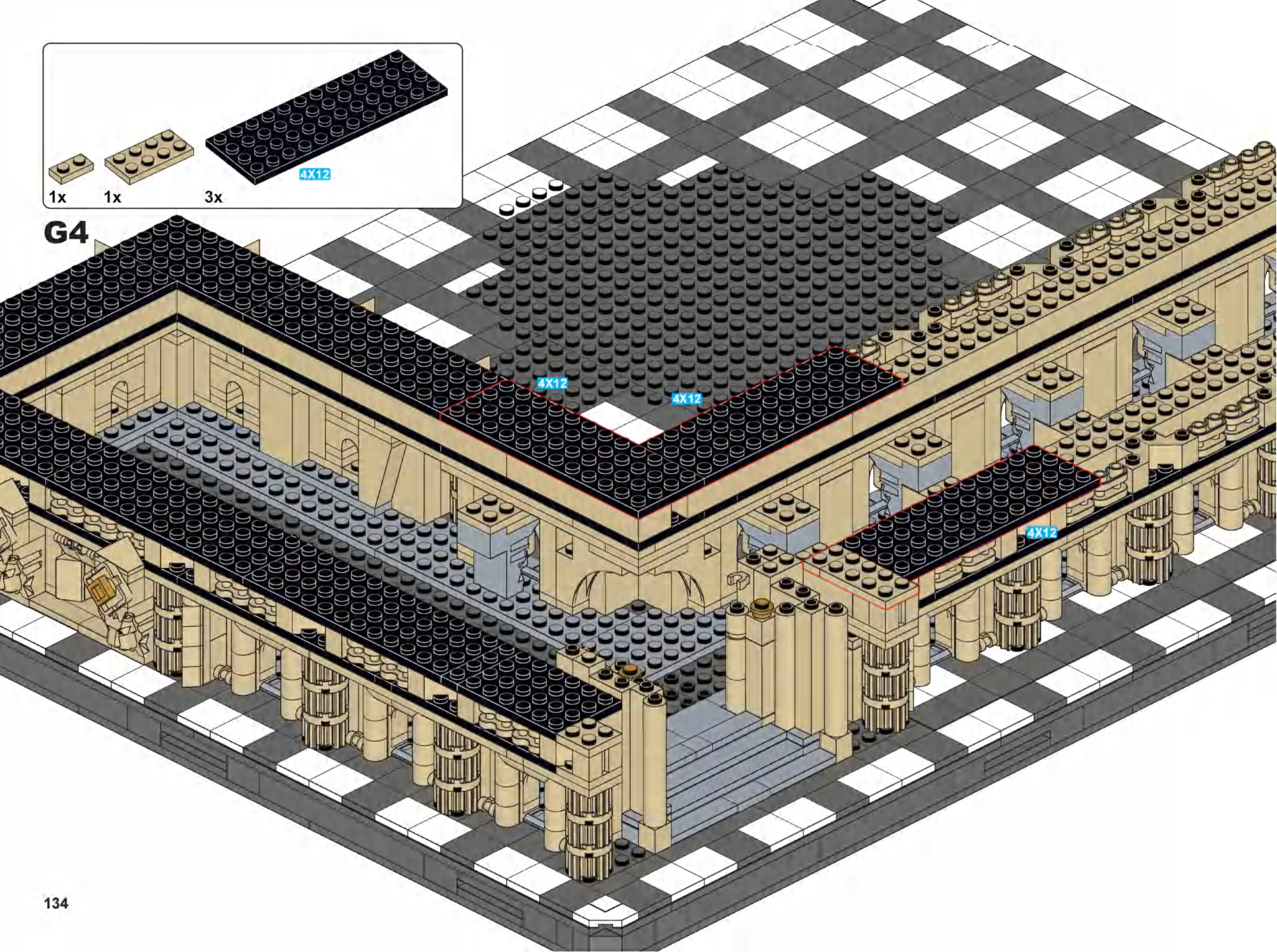

G4

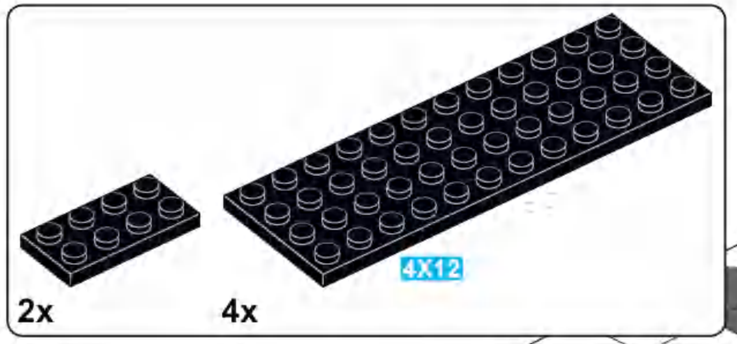

G5

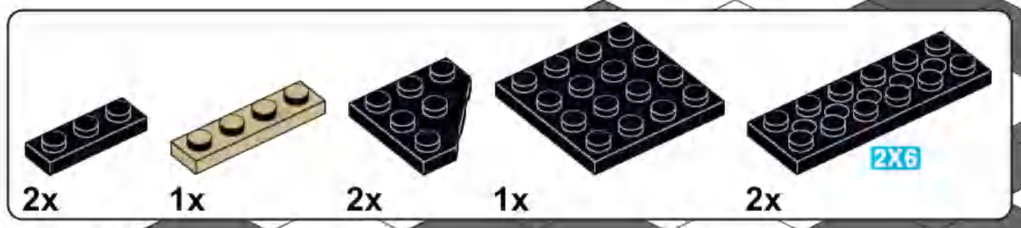

G6

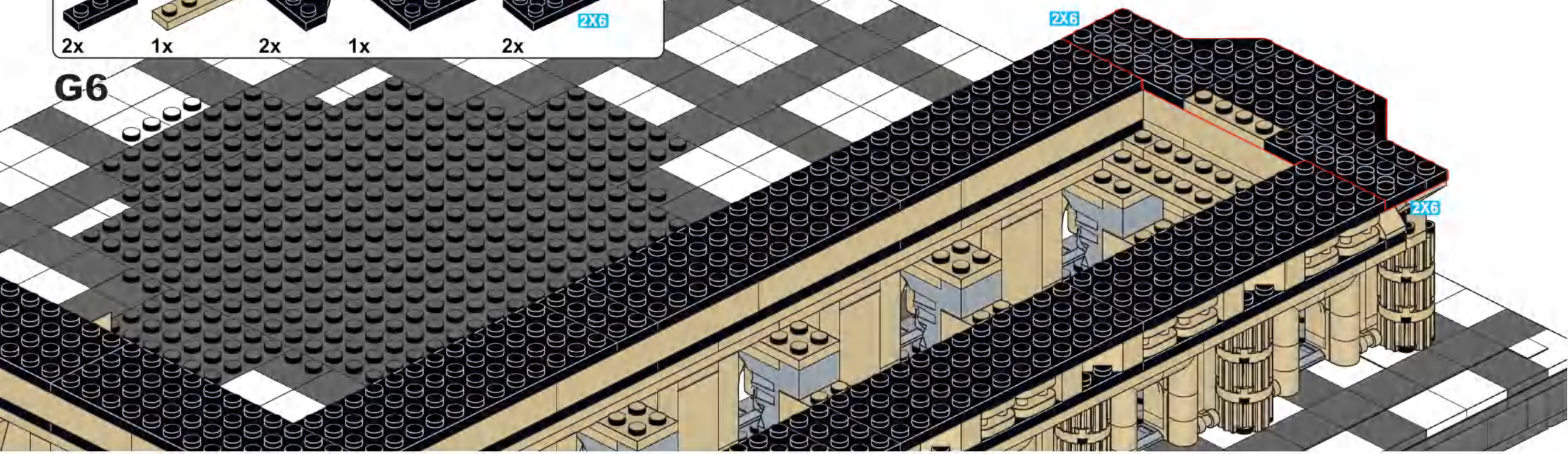

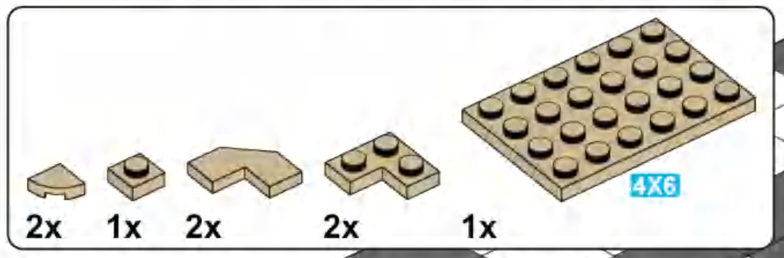

G7

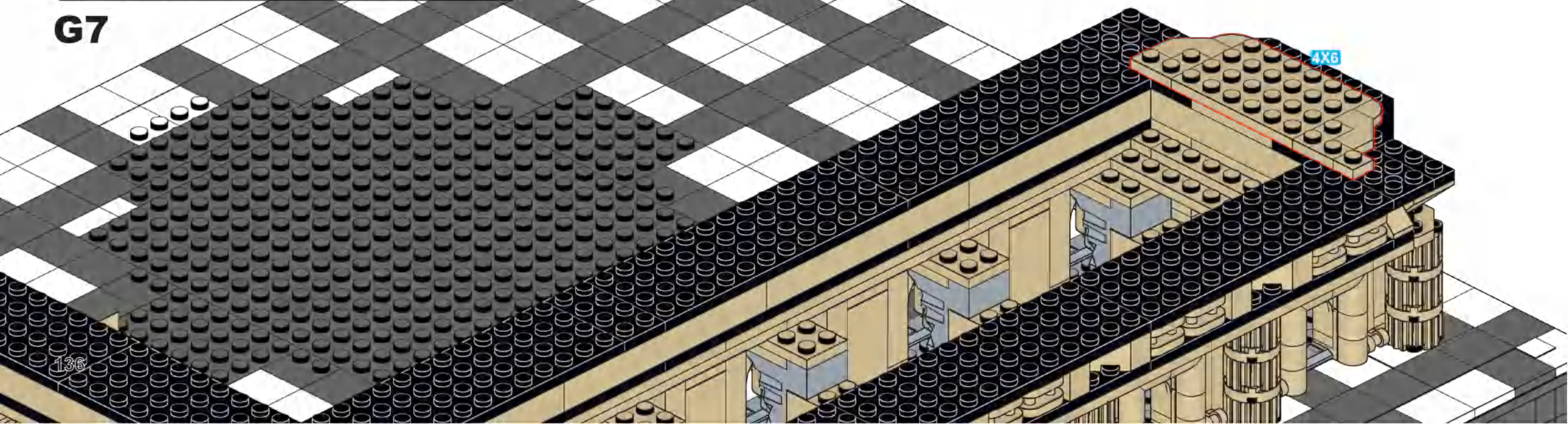

G8

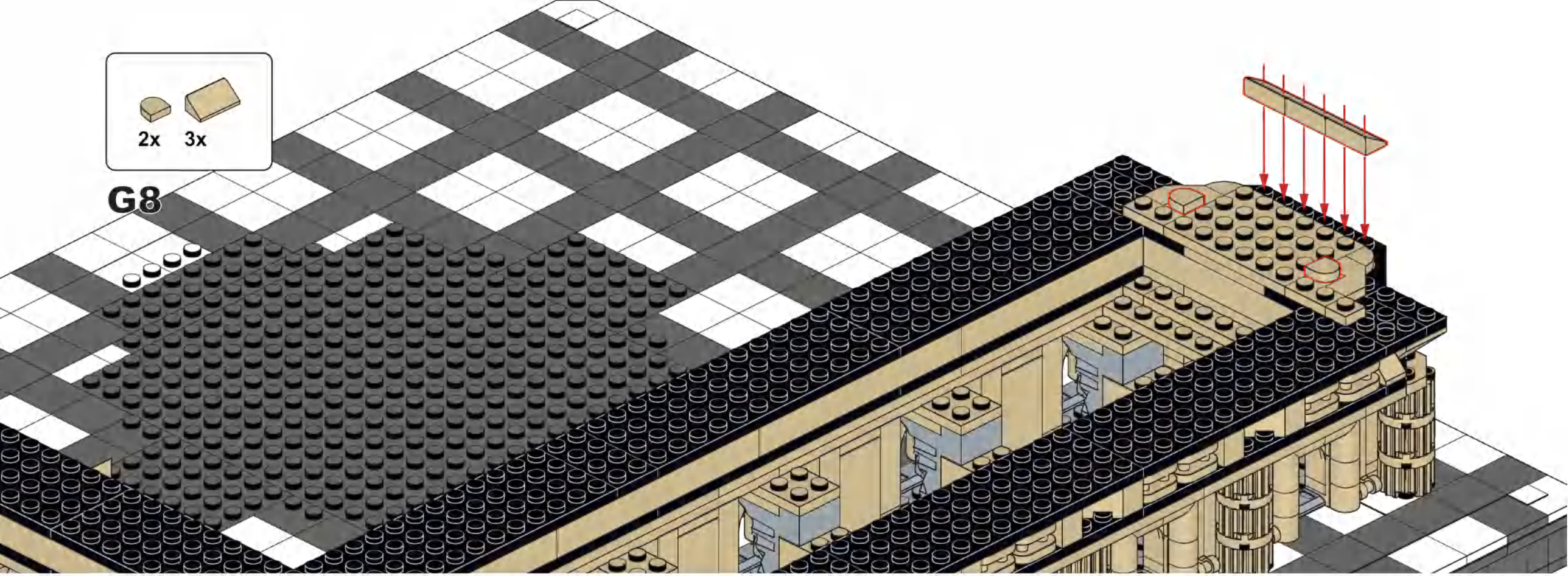

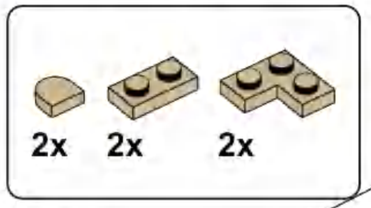

G9

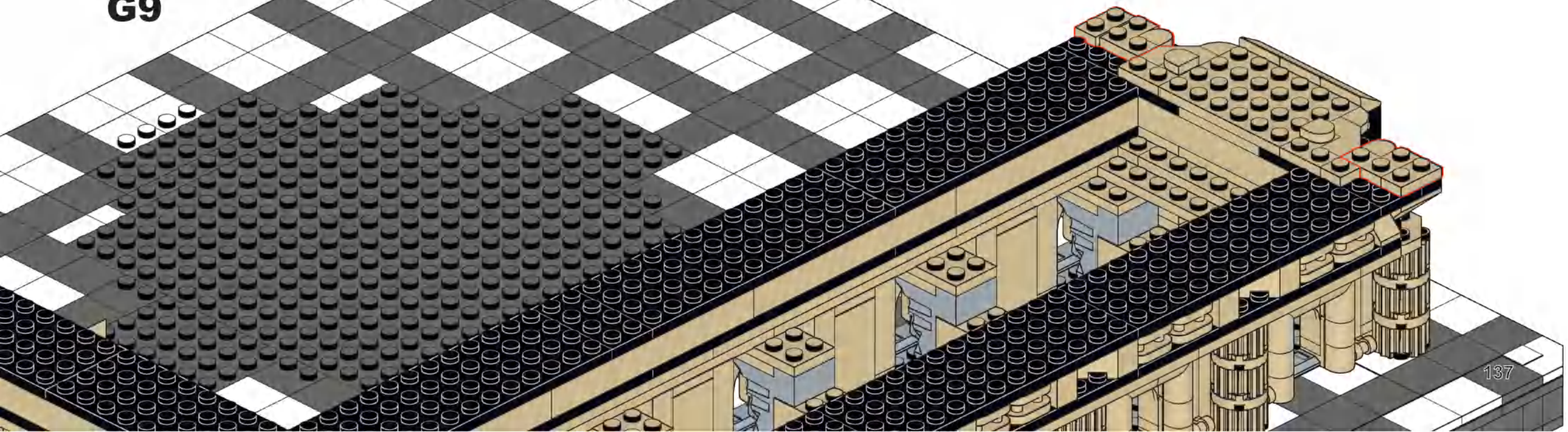

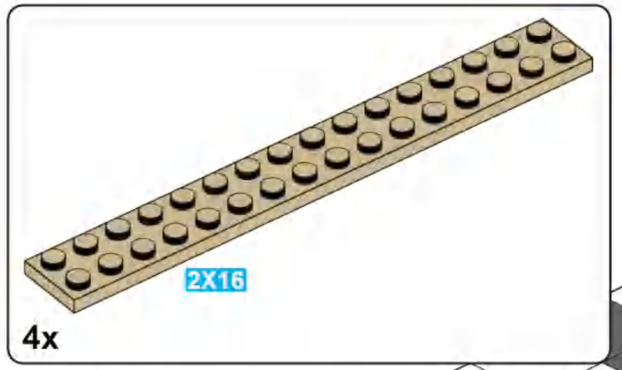

4x

G10

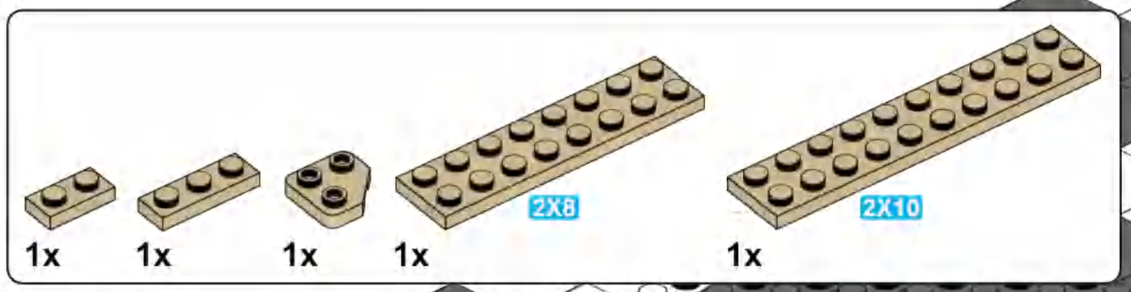

G11

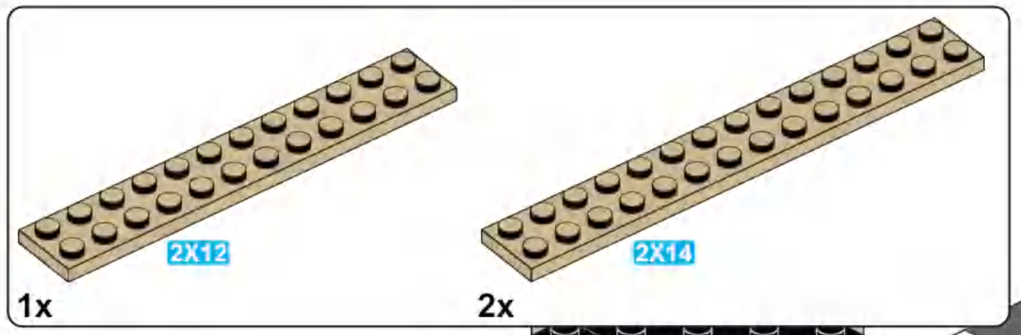

G12

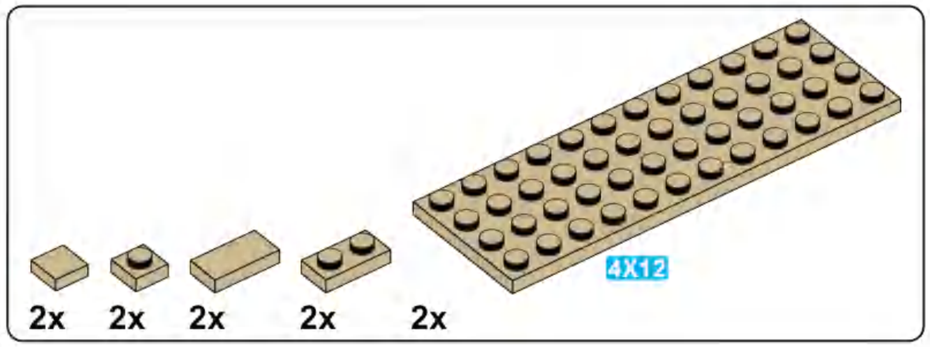

G13

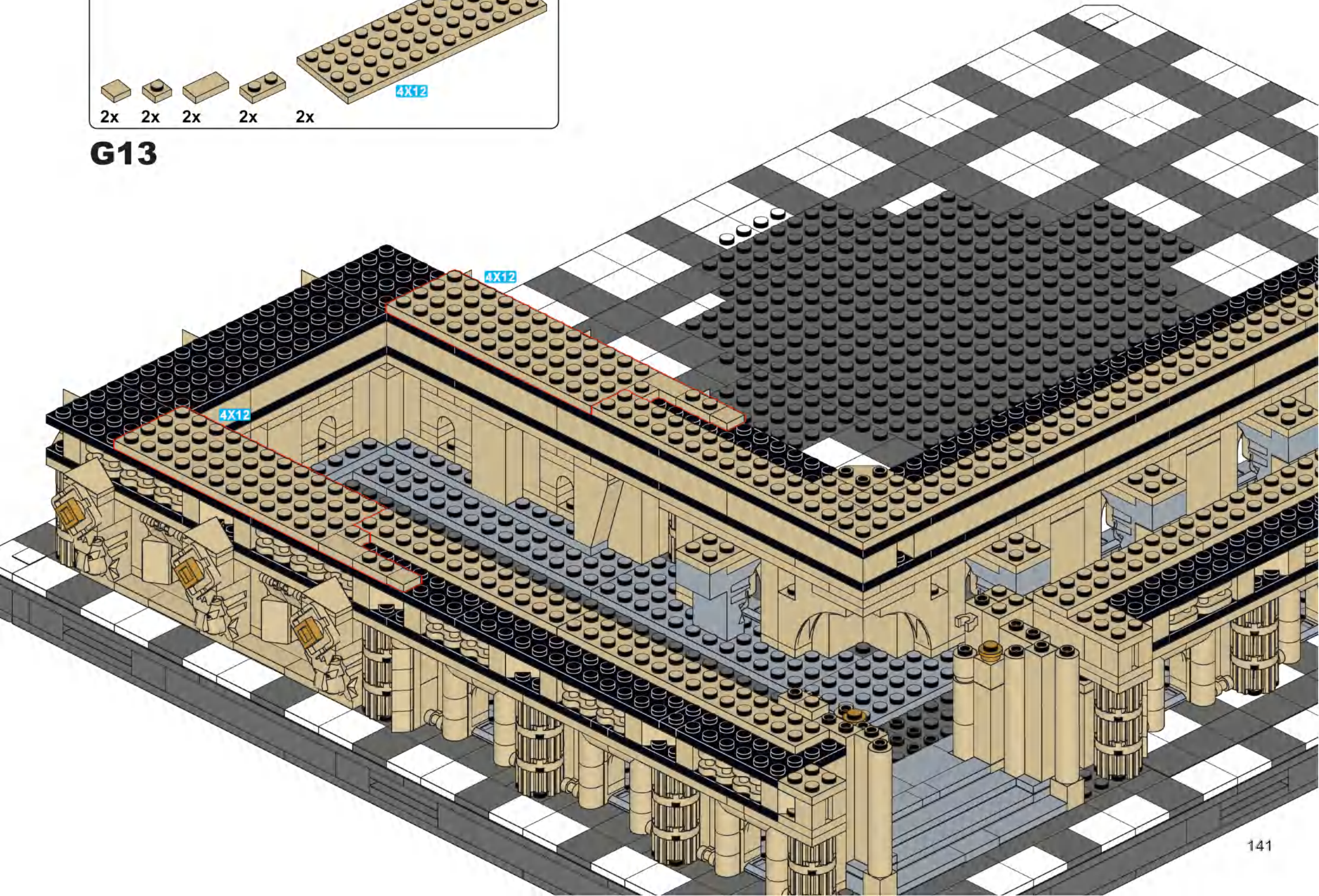

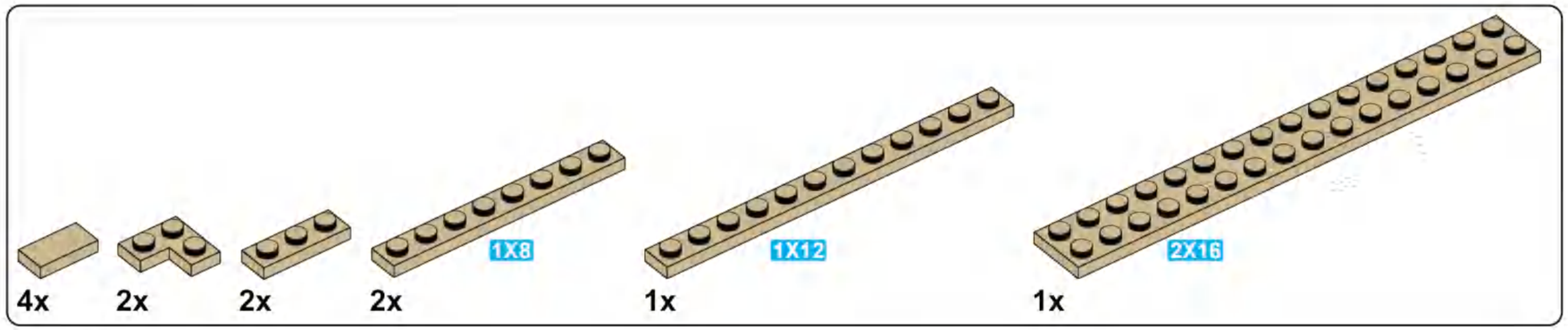

G14

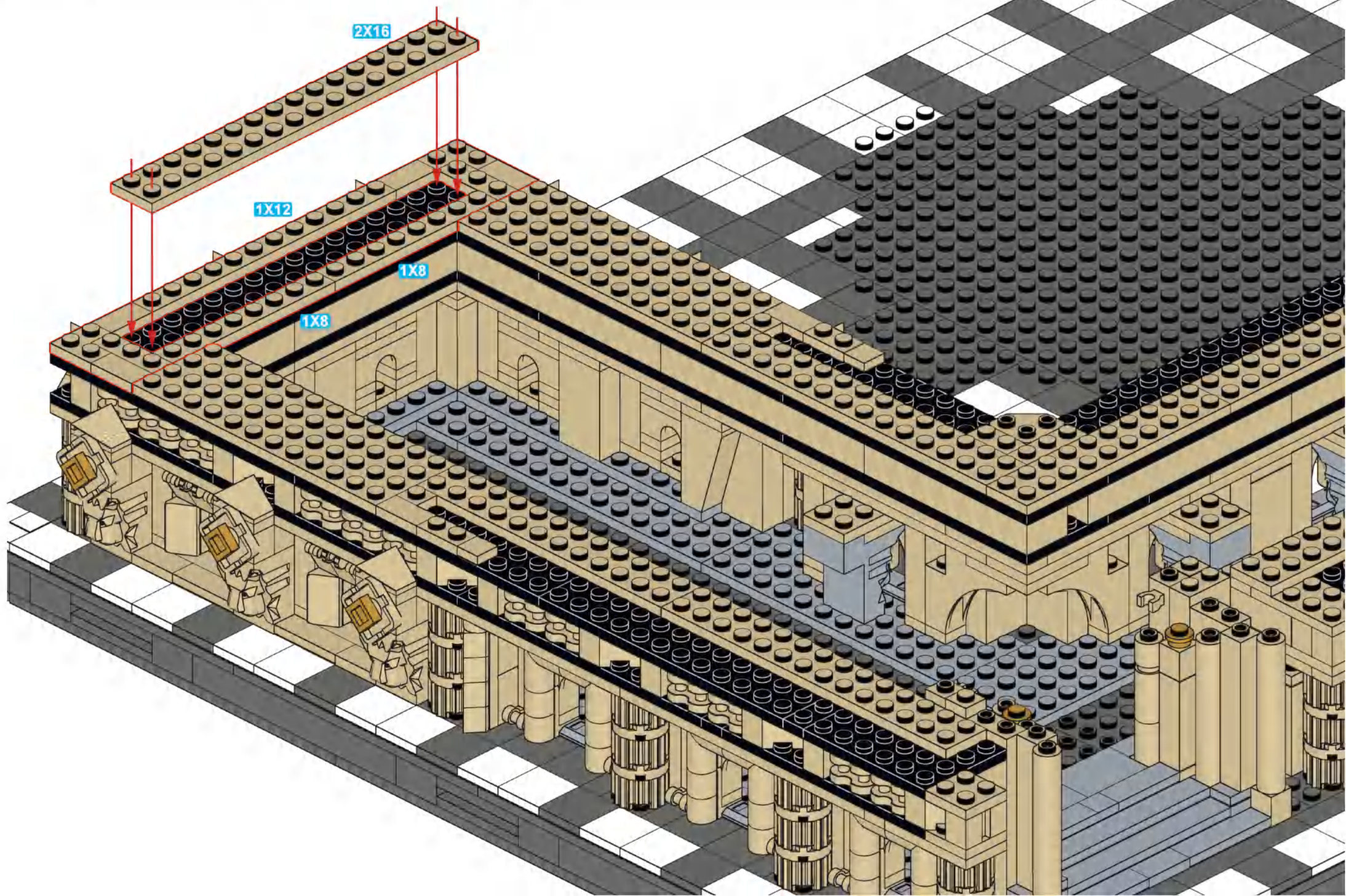

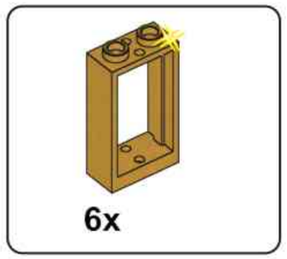

G15

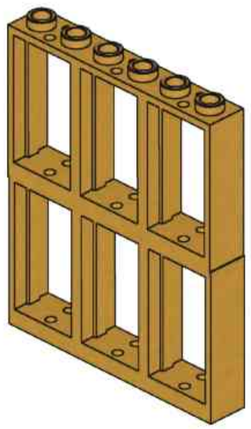

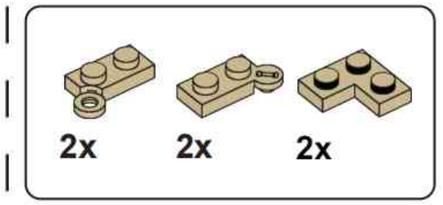

G16

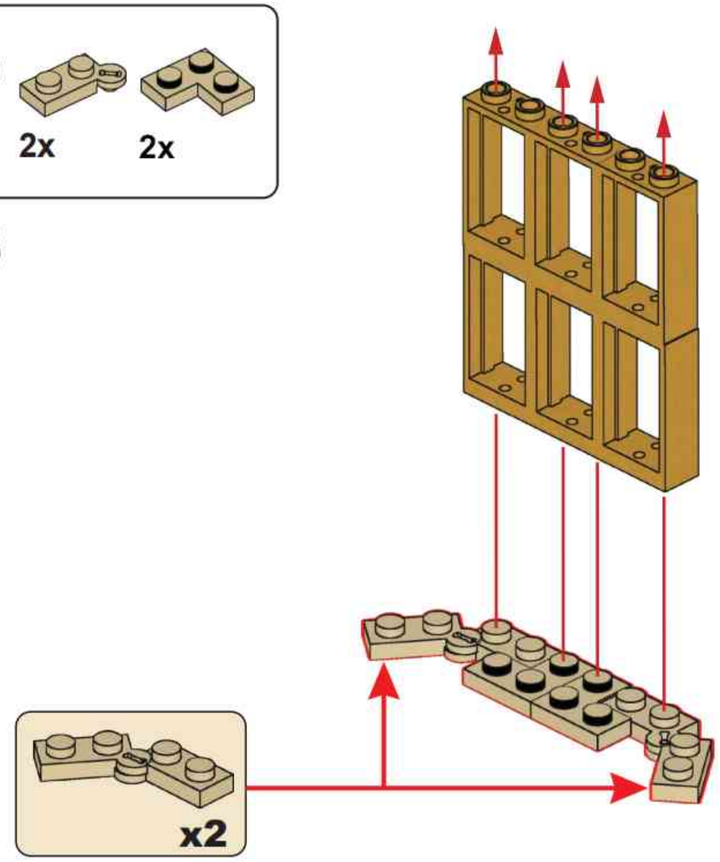

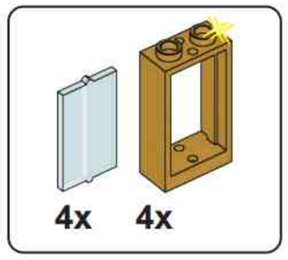

G17

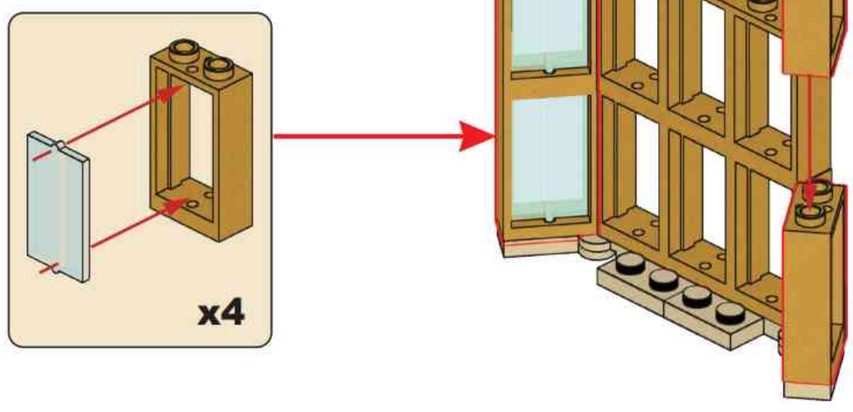

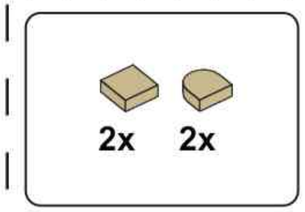

G18

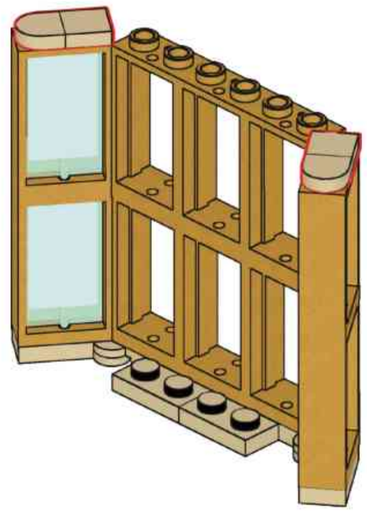

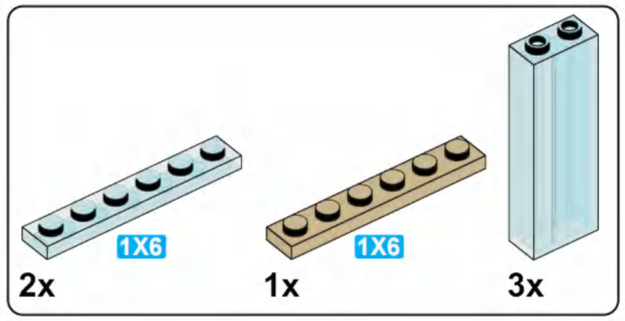

G19

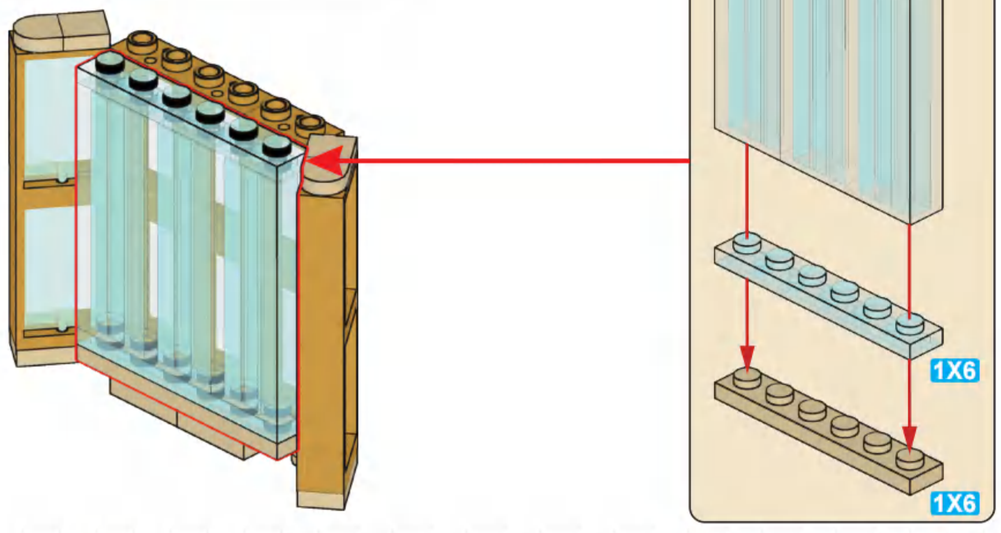

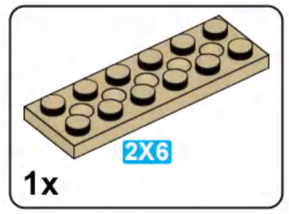

G20

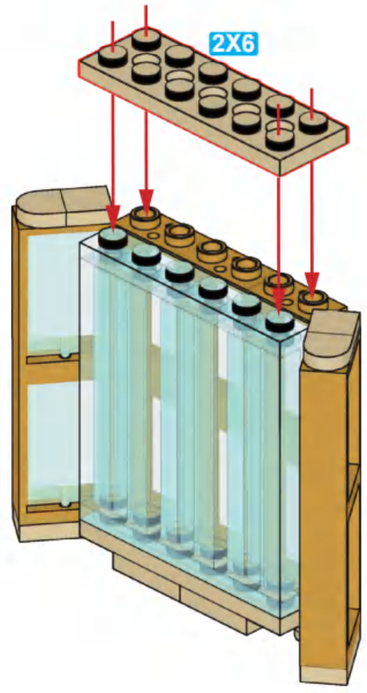

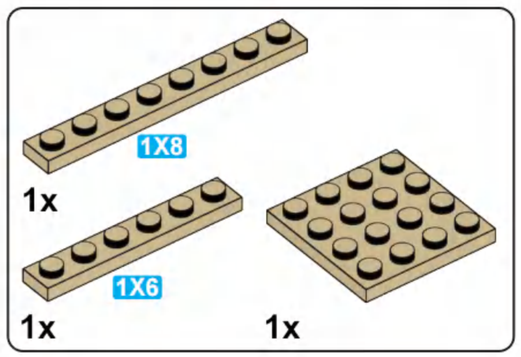

G21

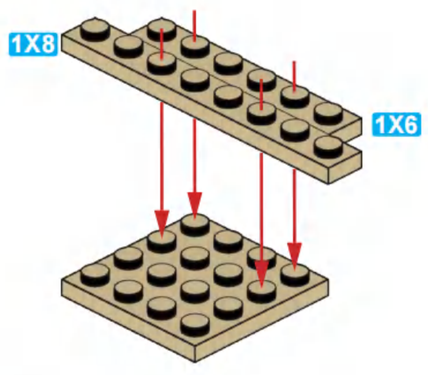

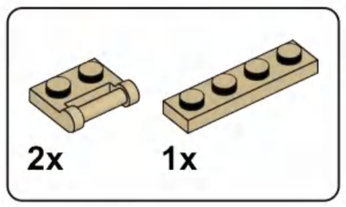

G22

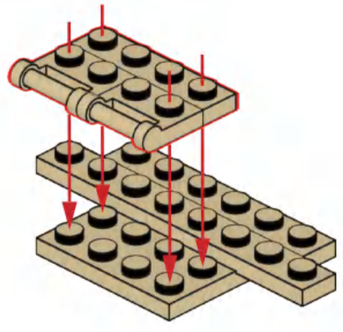

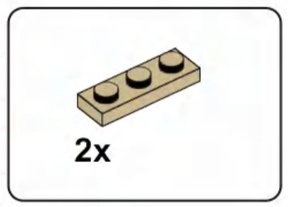

G23

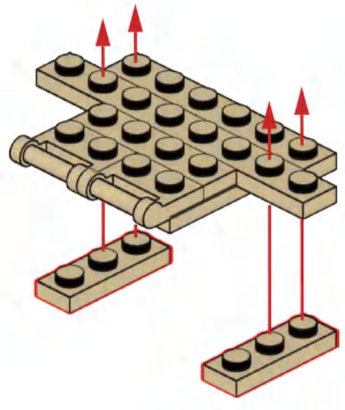

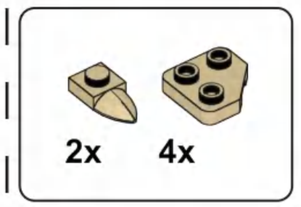

G24

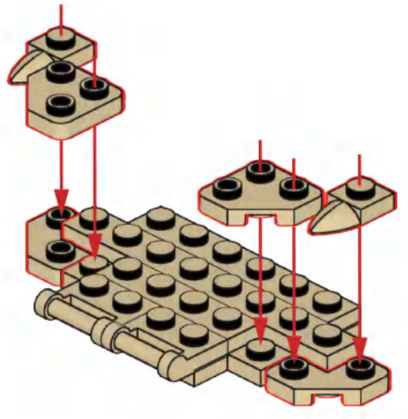

G25

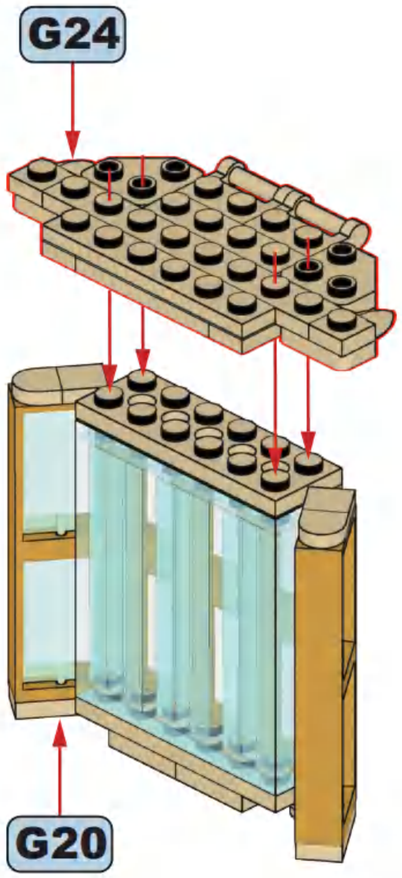

G26

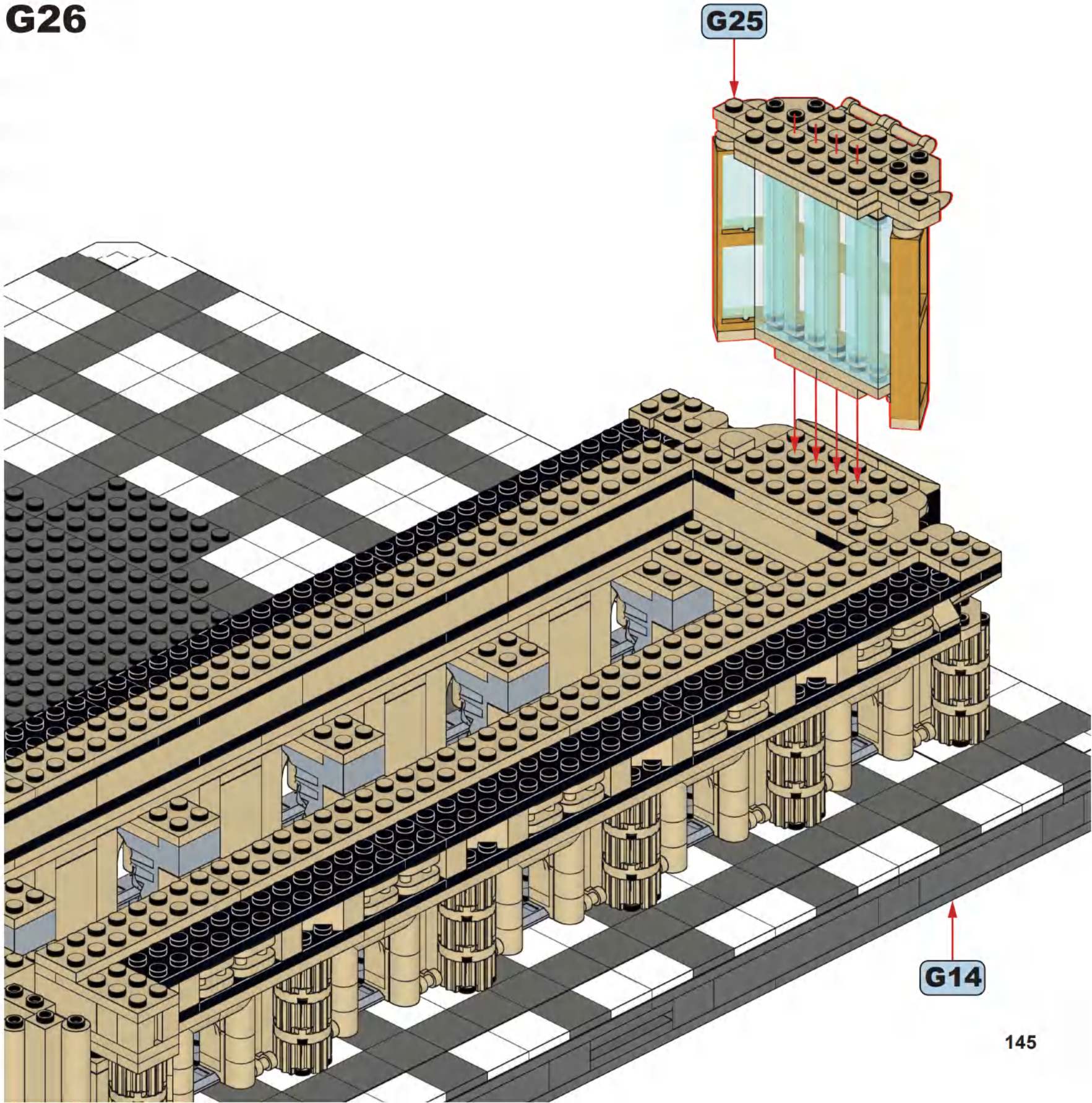

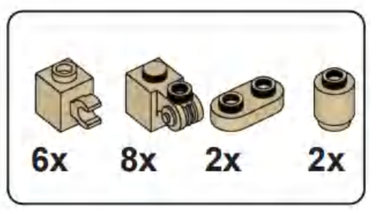

G27

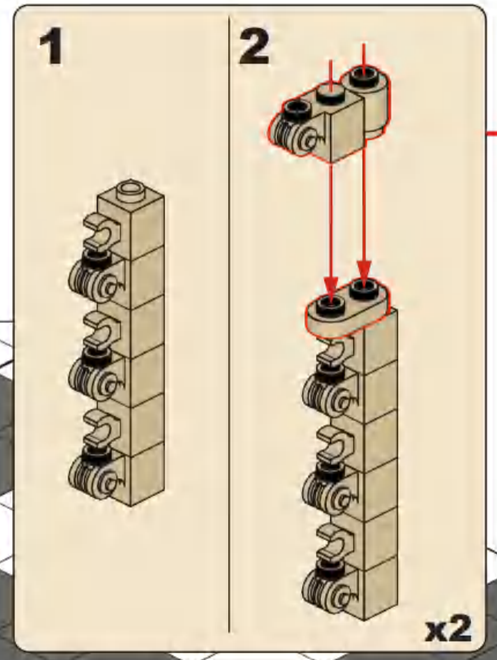

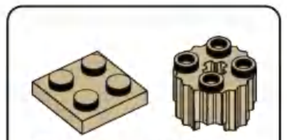

G28

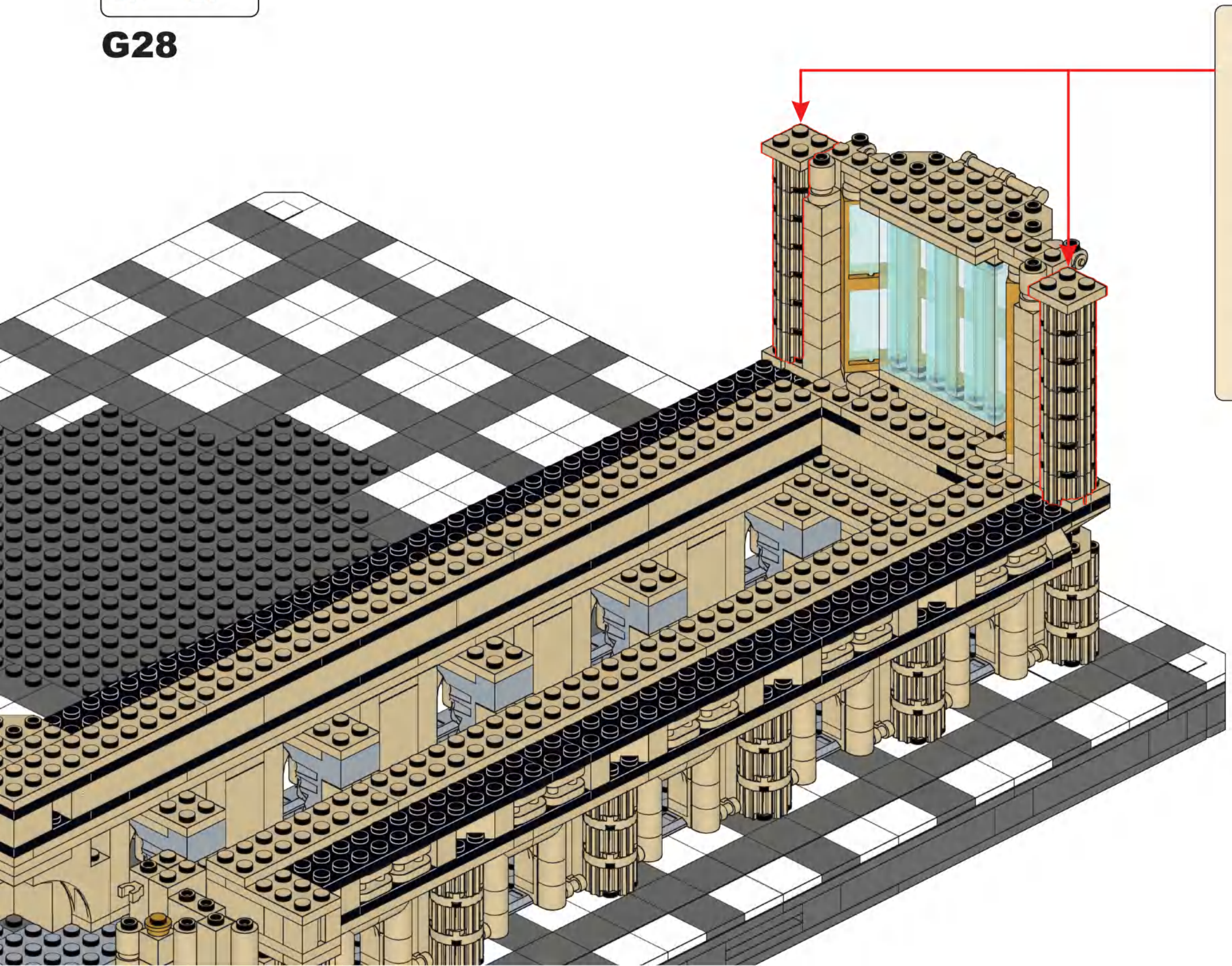

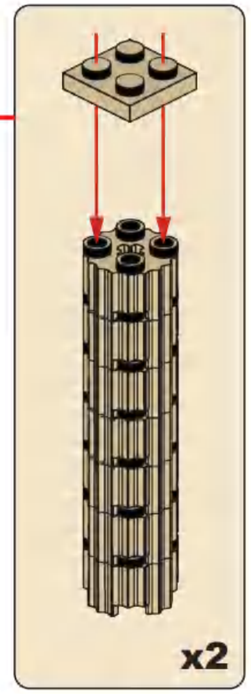

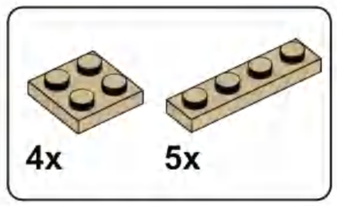

G29

G30

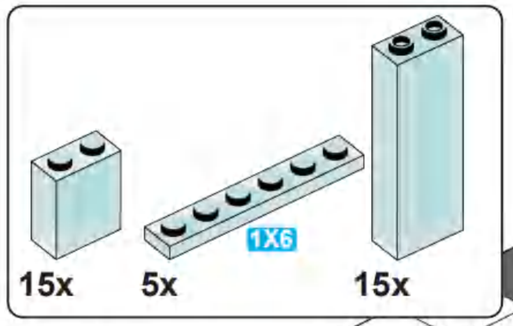

G31

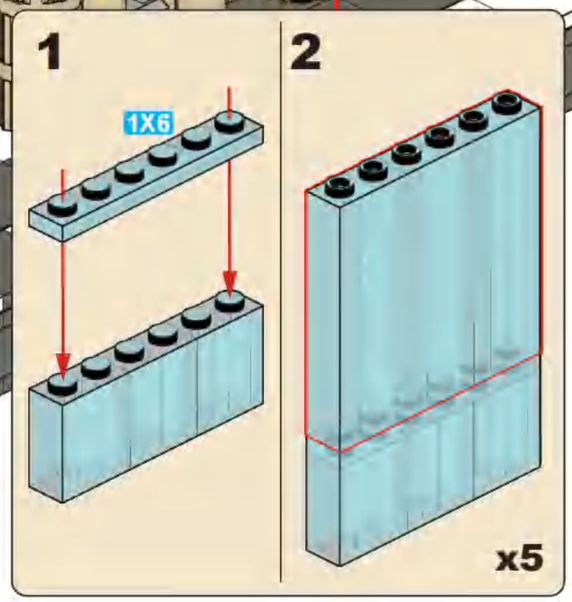

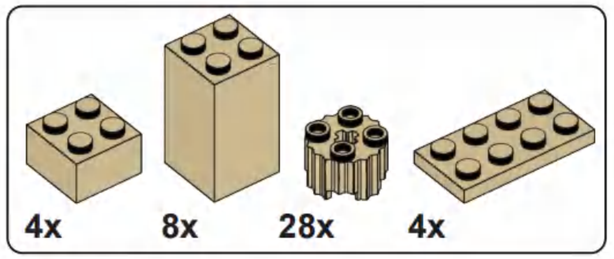

G32

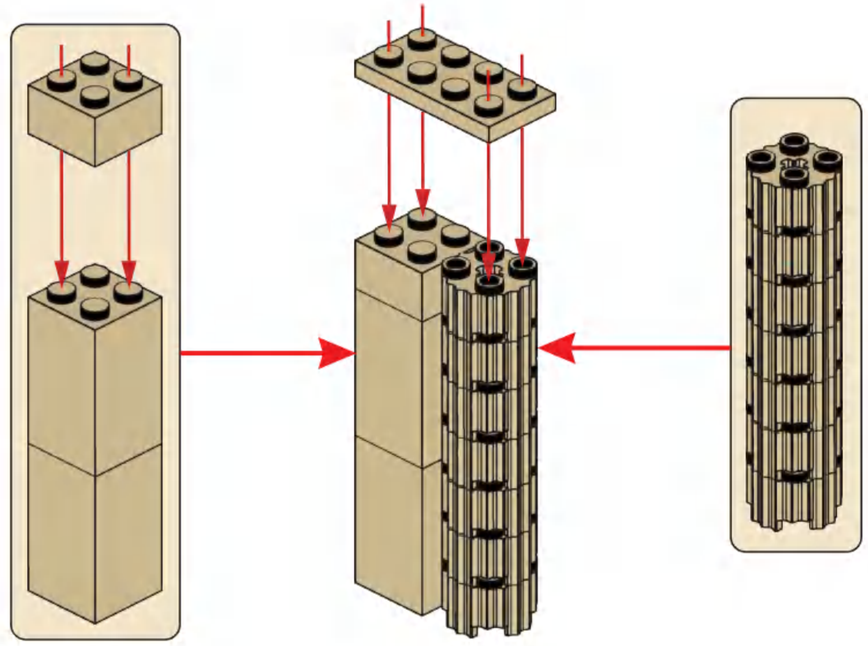

x4

G33

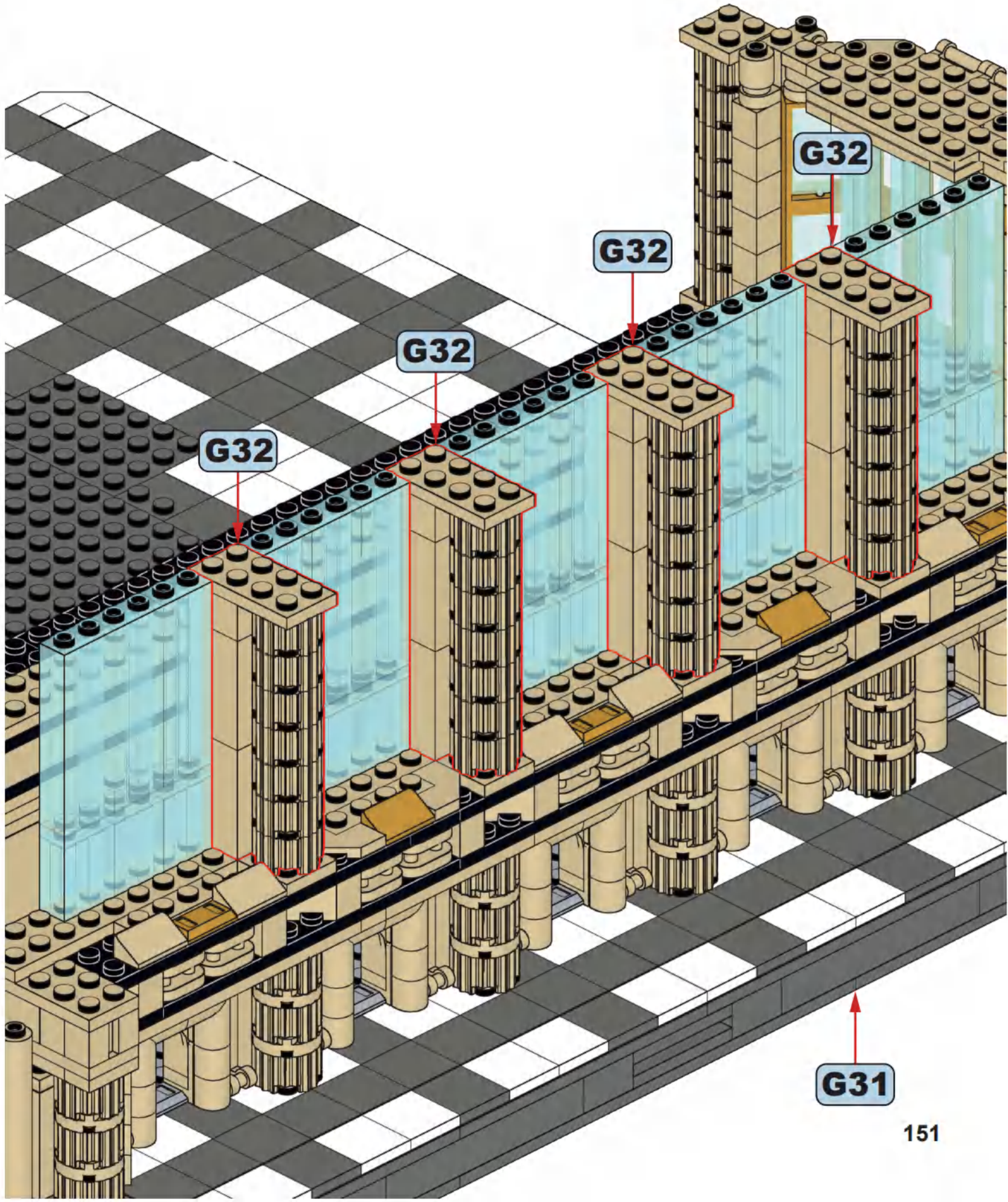

8

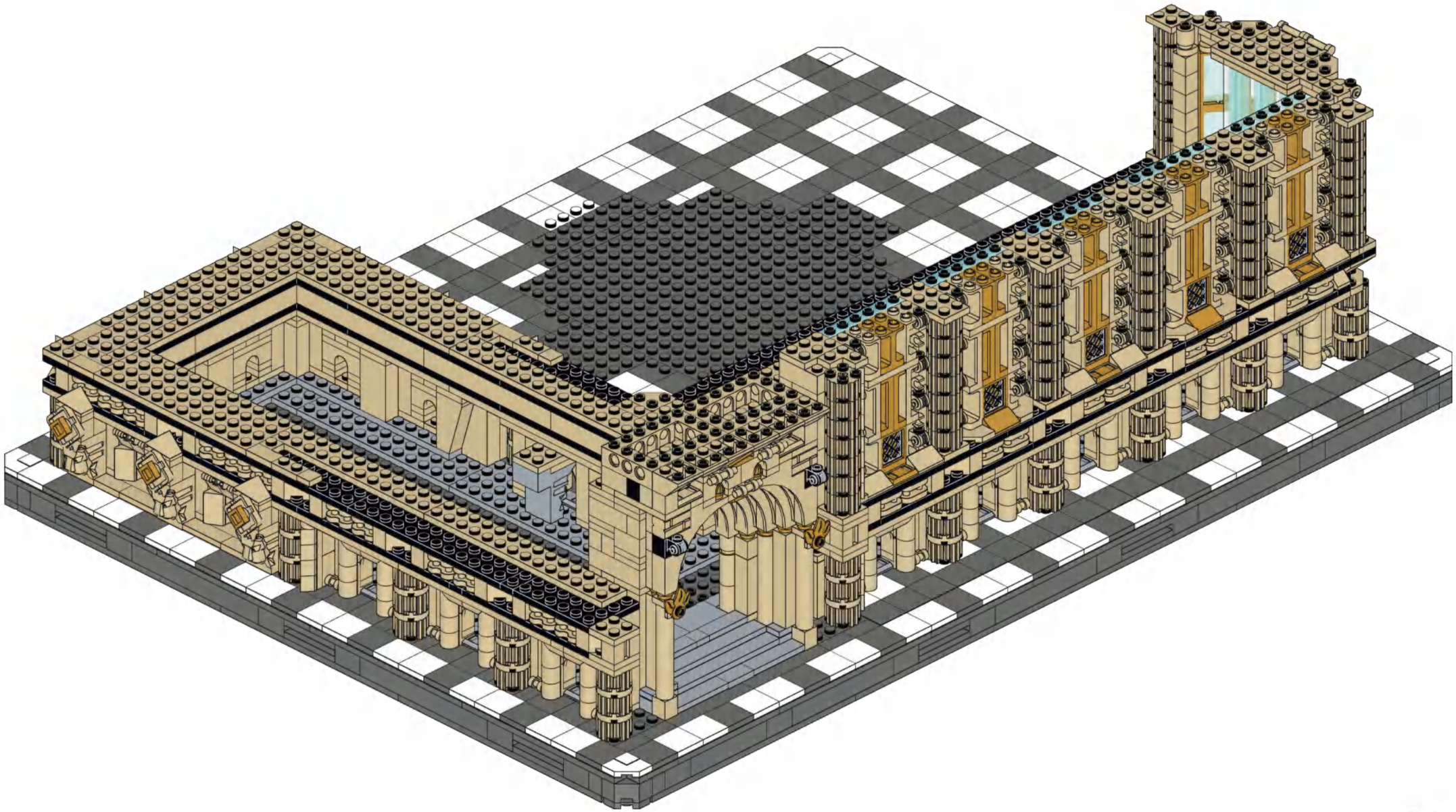

H

2x 2x
1x 1x
1X6

H1

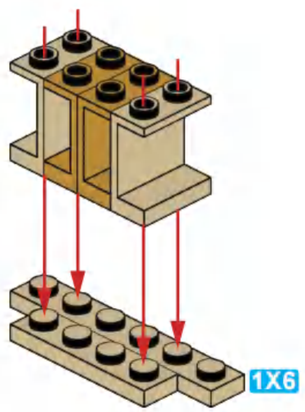

2x 2x

H2

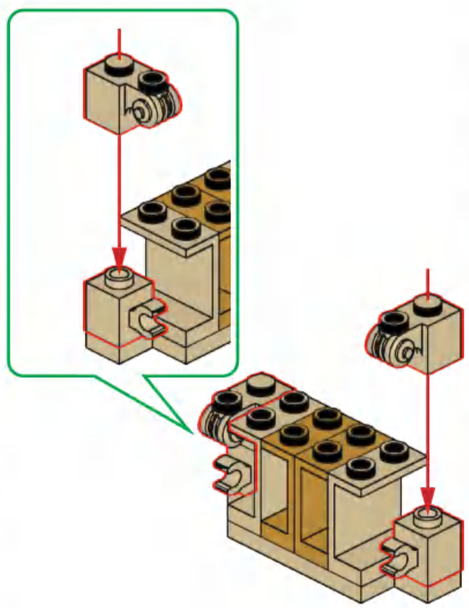

2x 2x

H3

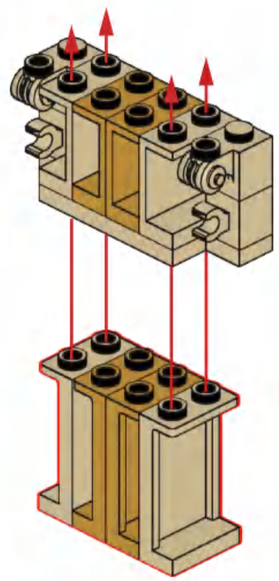

2x 4x

H4

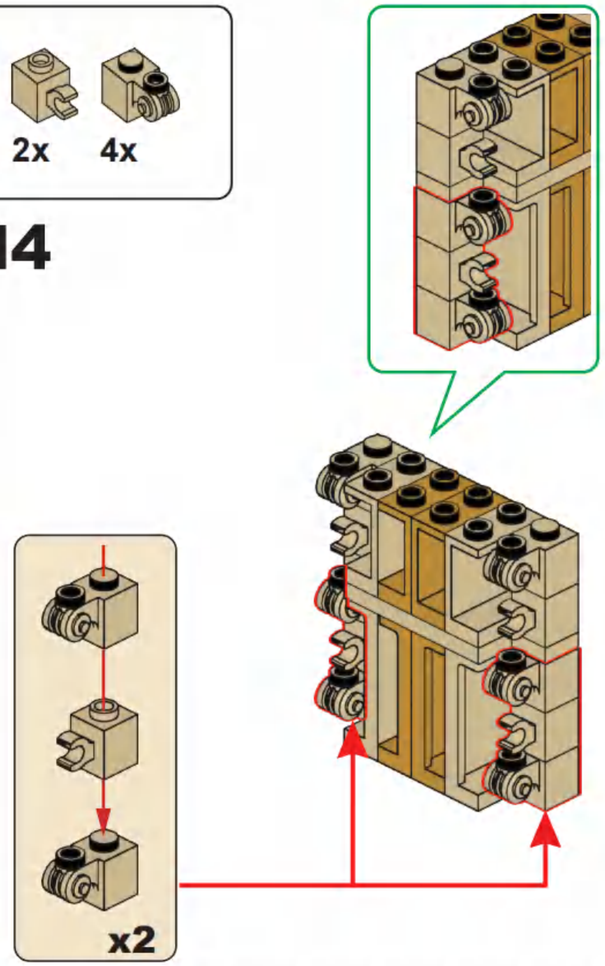

1x 2x 2x

H5

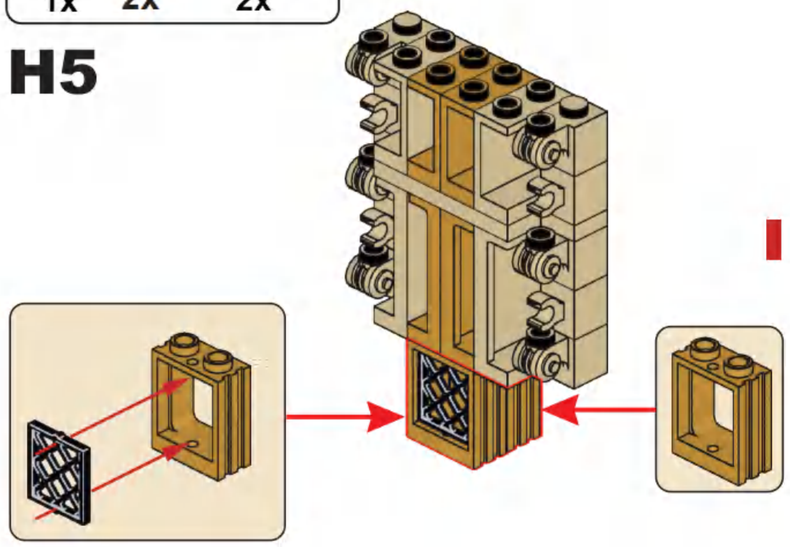

2x 2x

H6

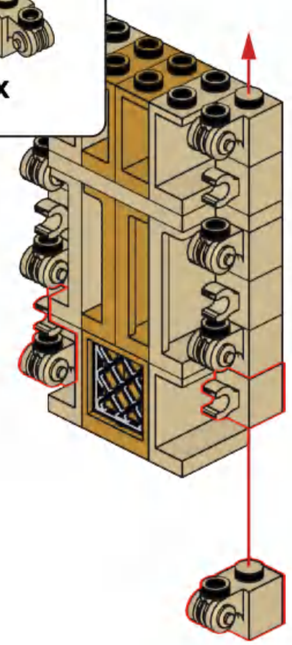

H7

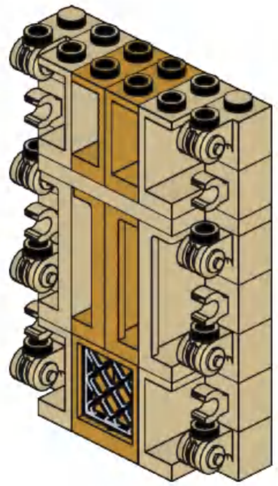

x5

H8

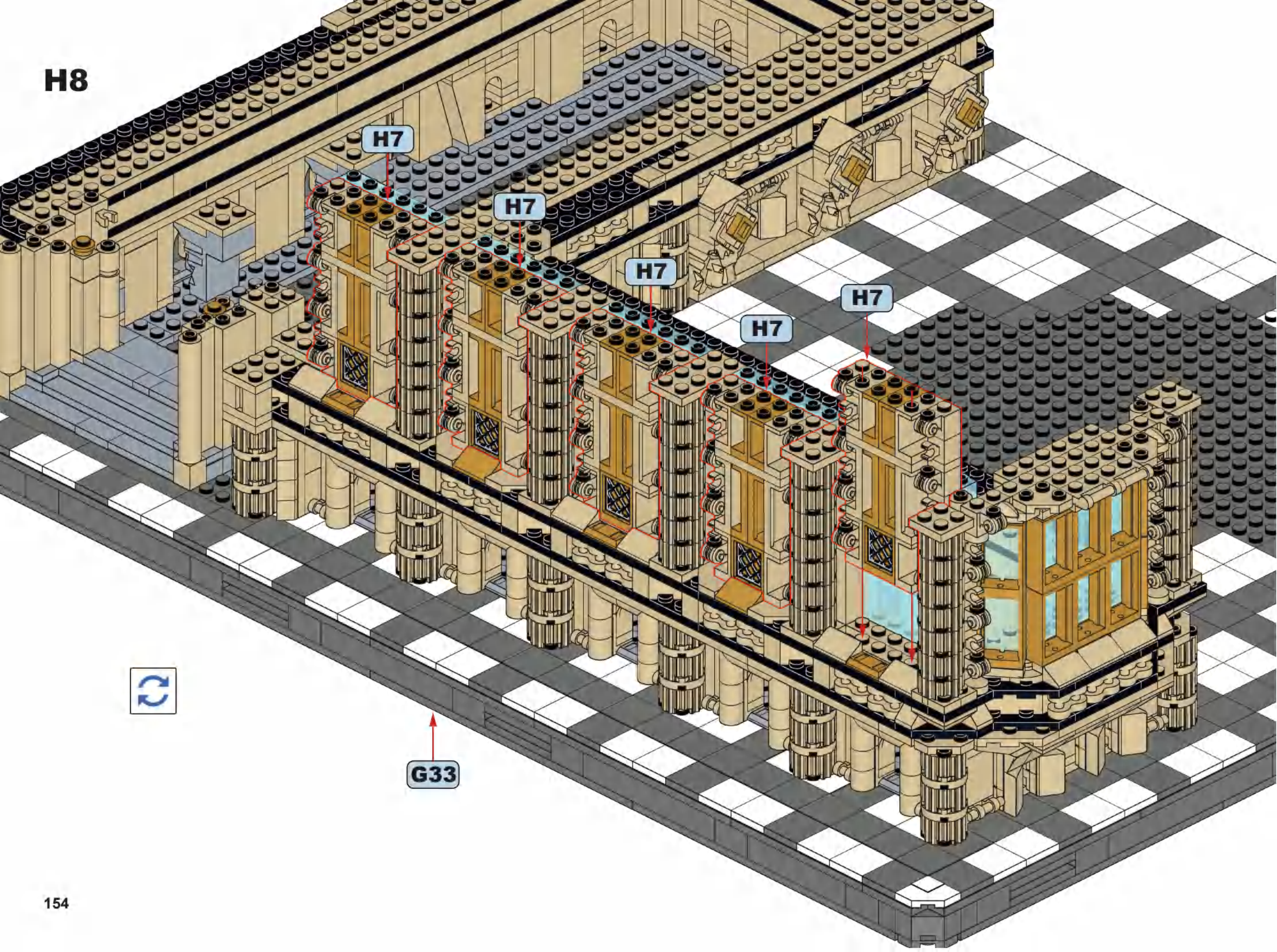

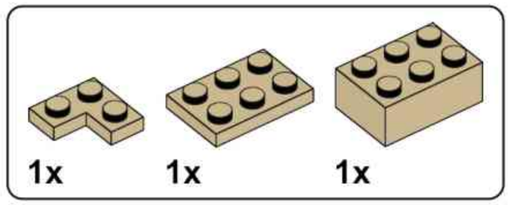

H9

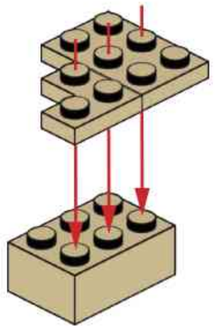

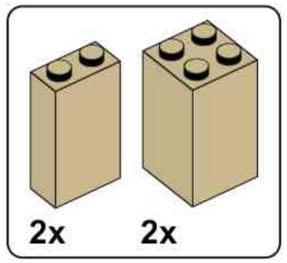

H10

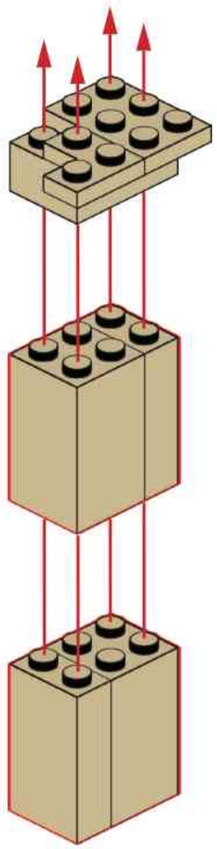

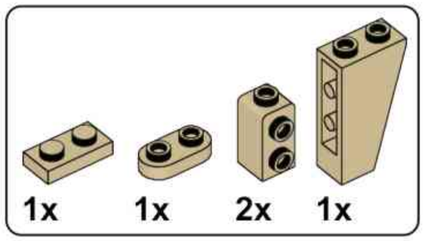

H11

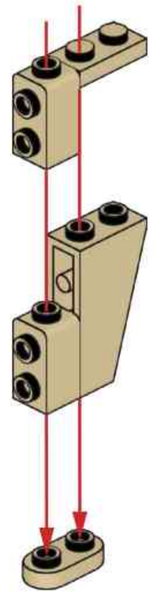

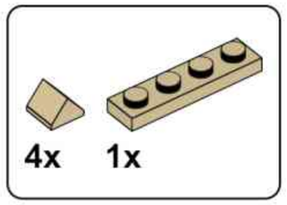

H12

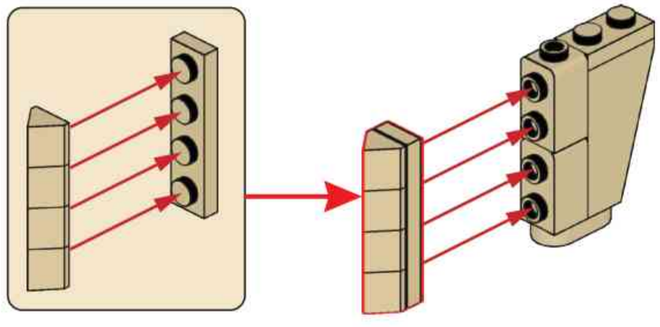

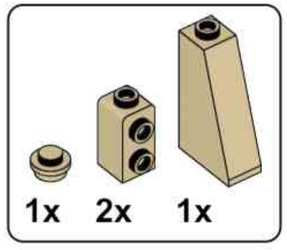

H13

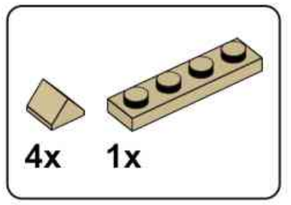

H14

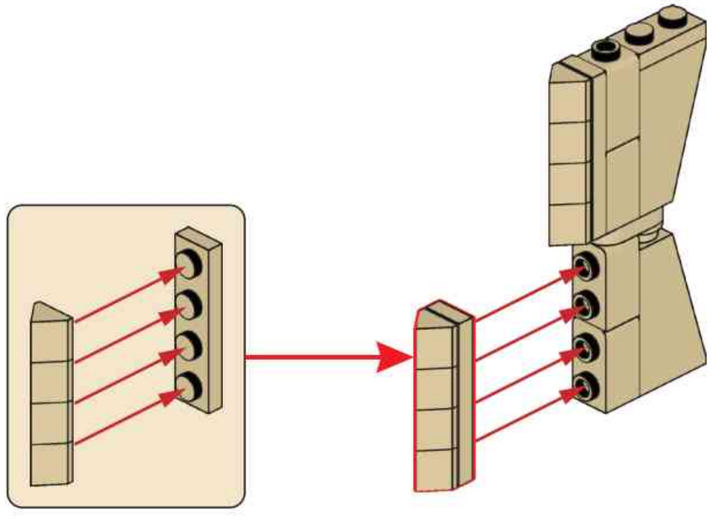

H15

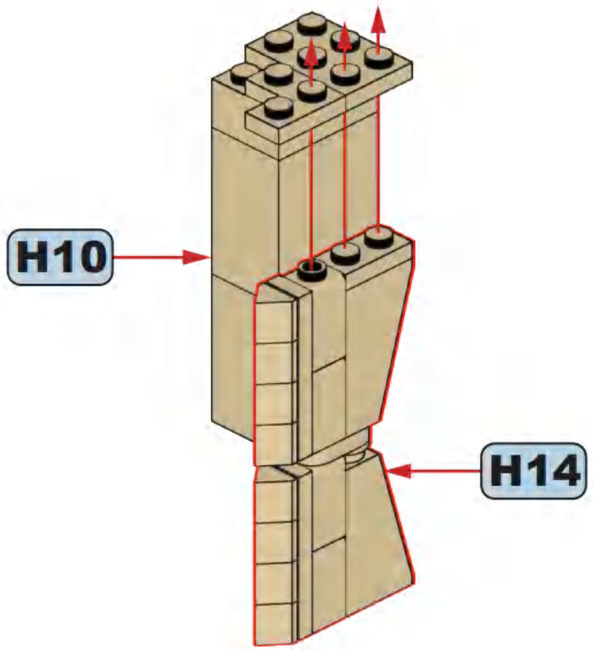

1x

H16

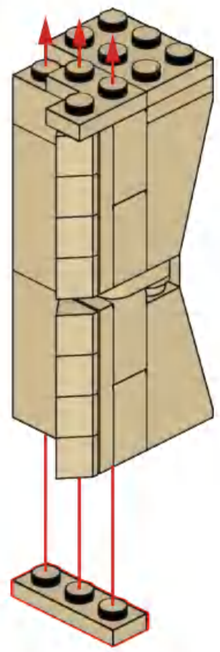

1x

H17

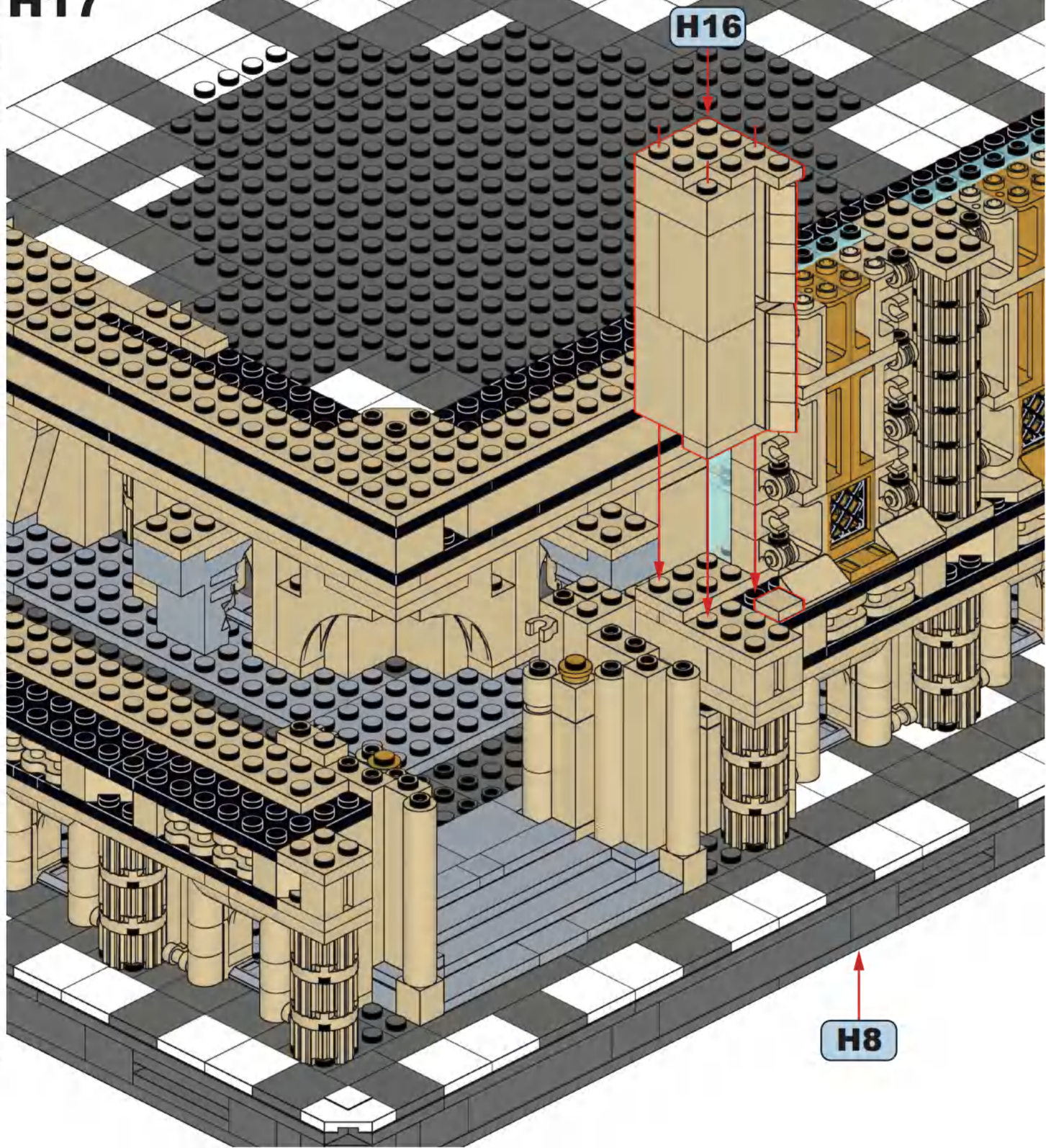

1x 7x

H18

6x 2x 2x

H19

x2

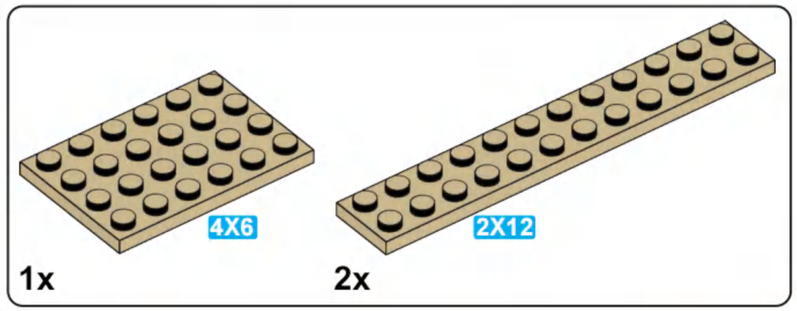

H20

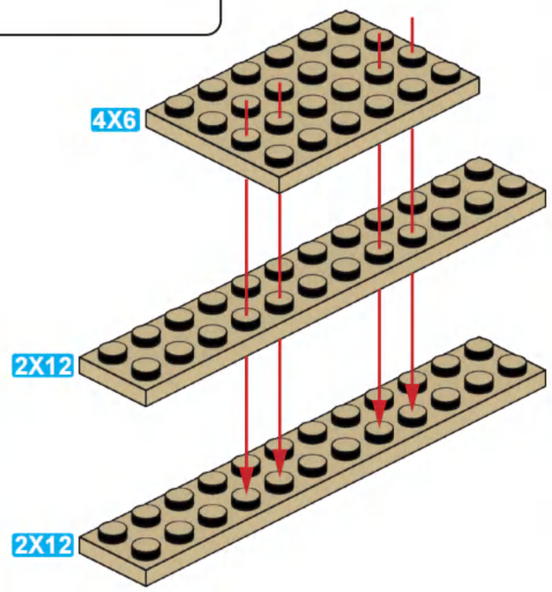

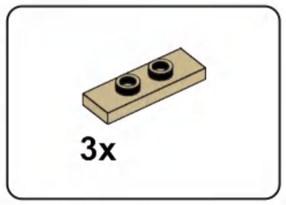

H21

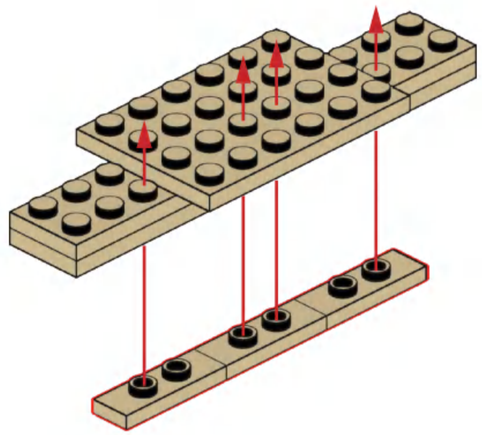

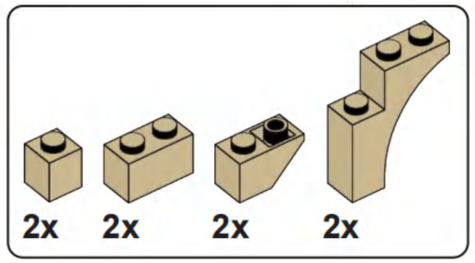

H22

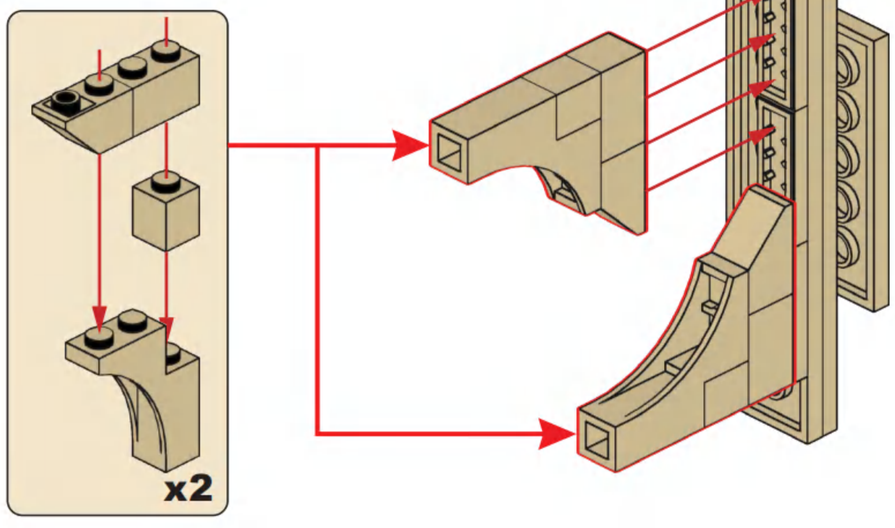

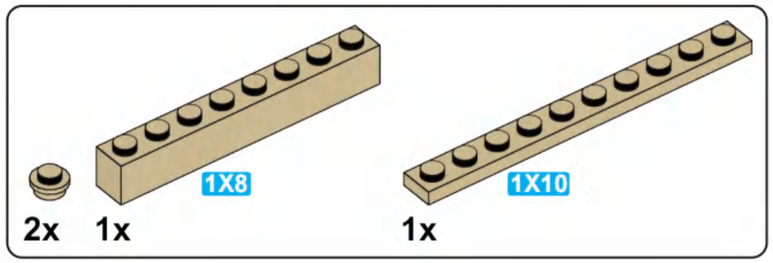

H23

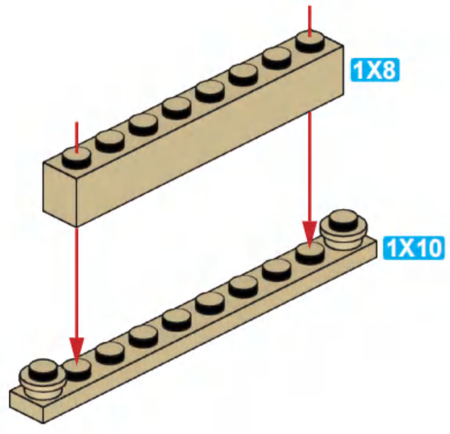

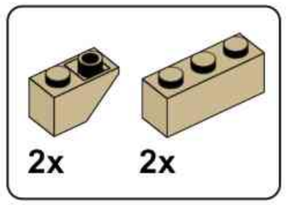

H24

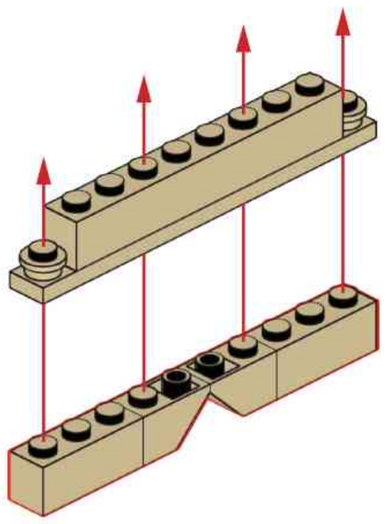

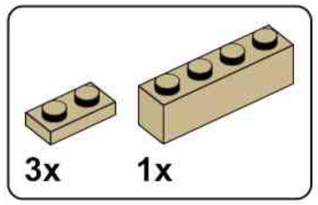

H25

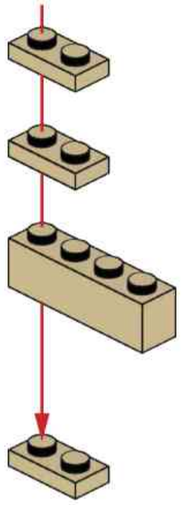

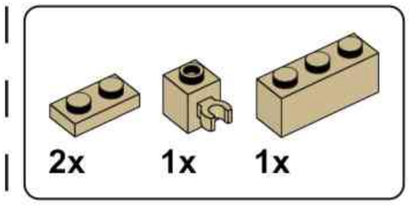

H26

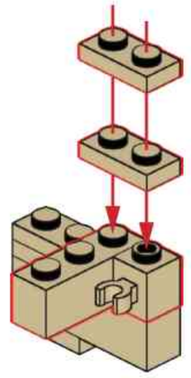

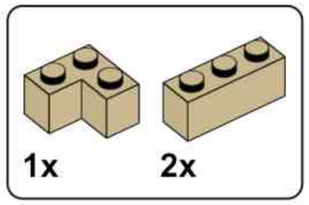

H27

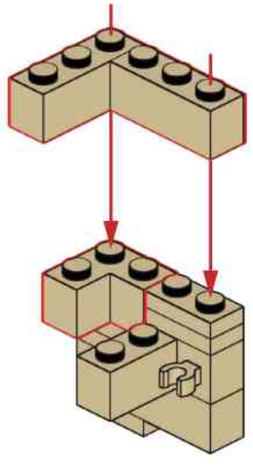

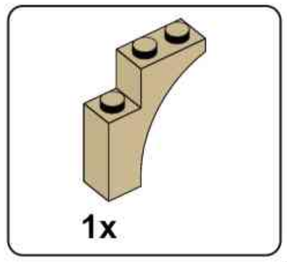

H28

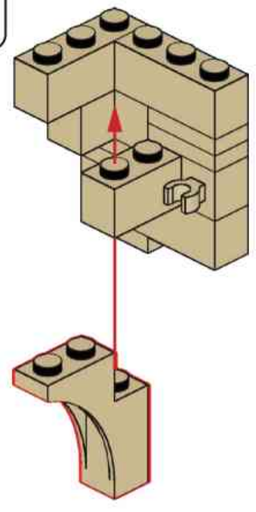

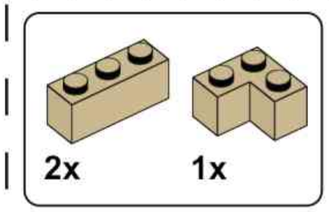

H29

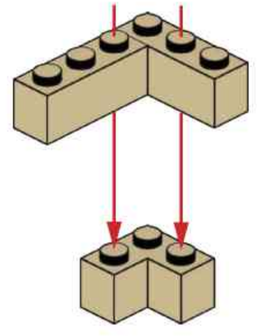

2x 1x

H30

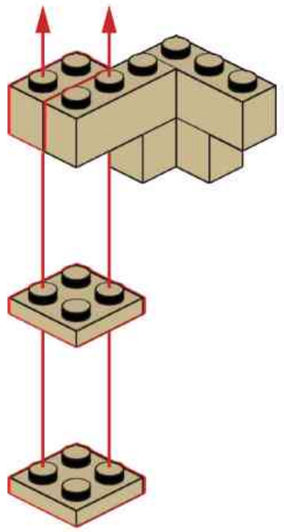

1x 1x 1x 1x

H31

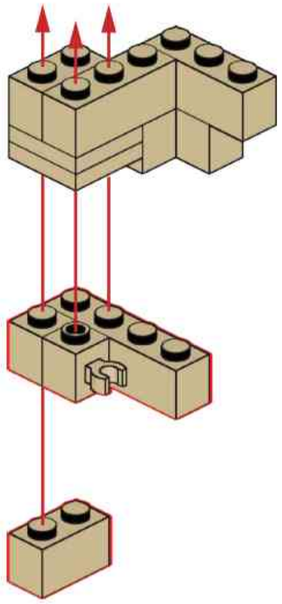

3x 1x

H32

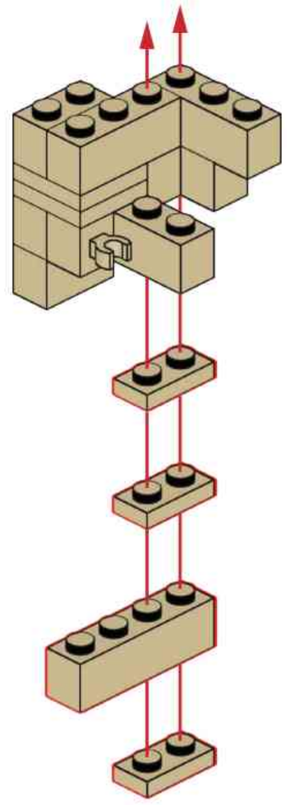

1x

H33

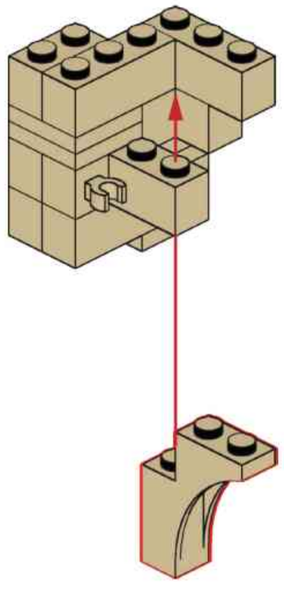

H34

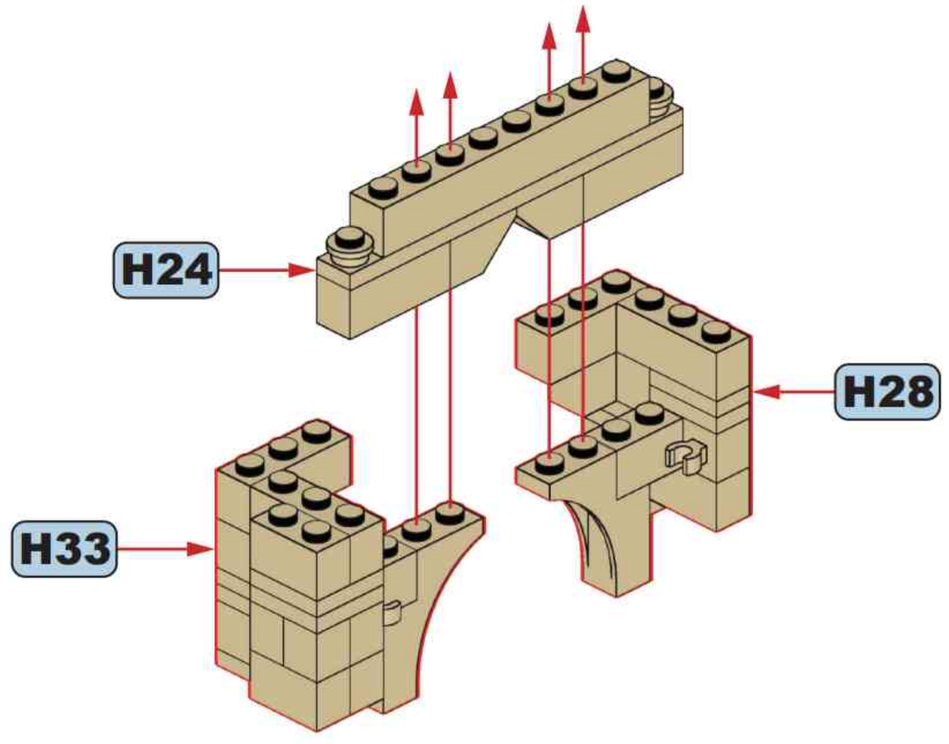

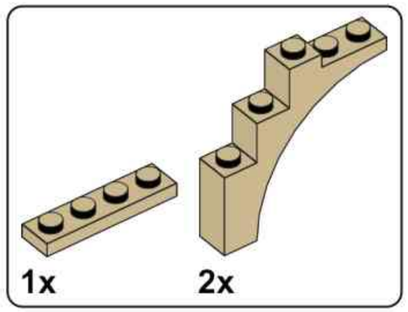

H35

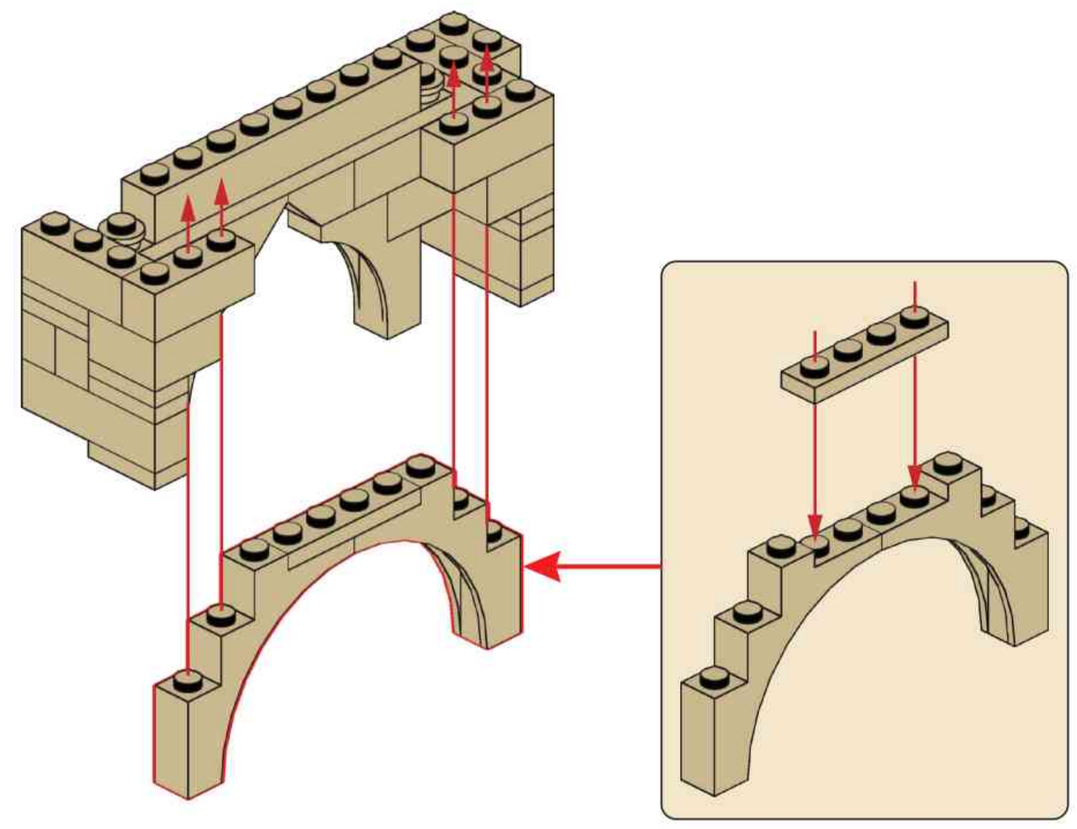

H36

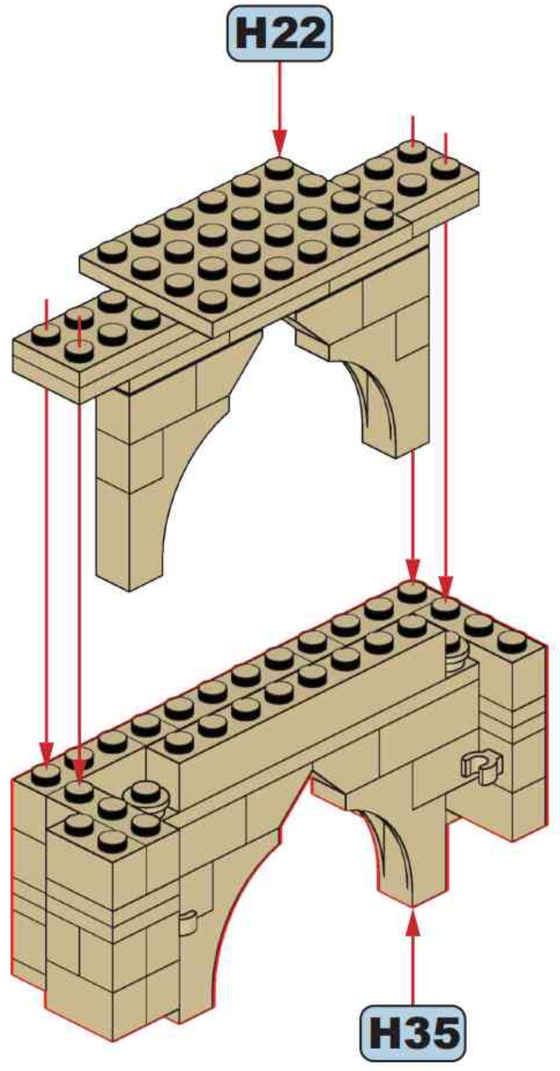

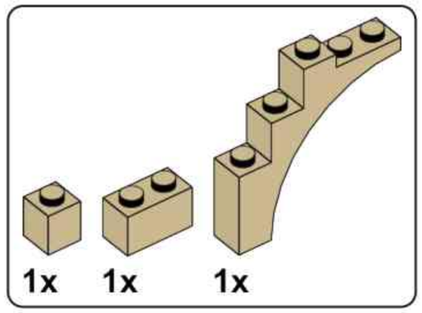

H37

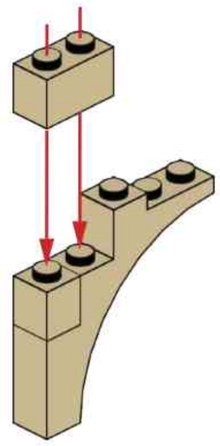

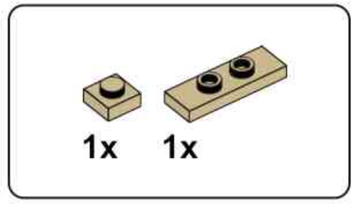

H38

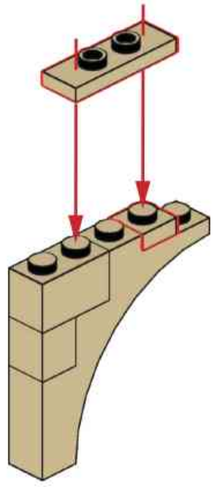

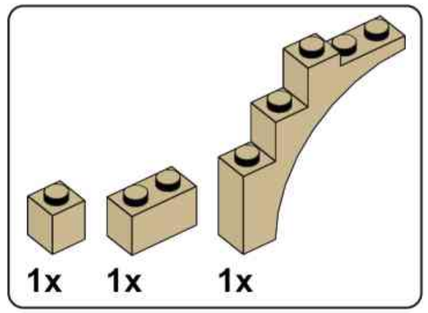

H39

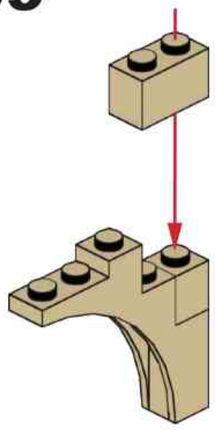

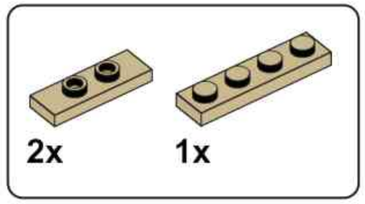

H40

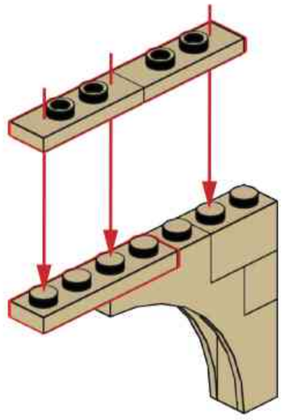

H41

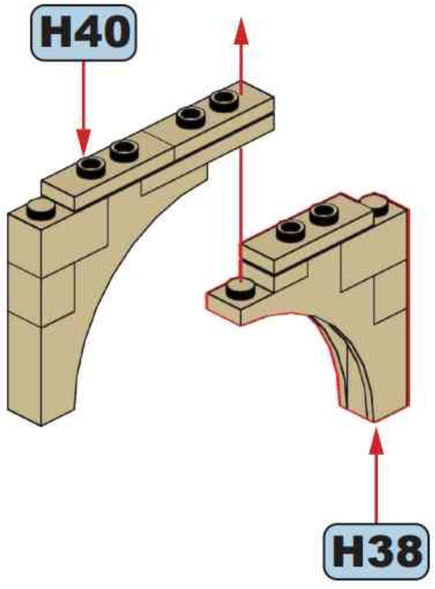

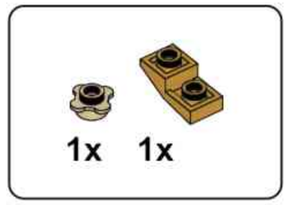

H42

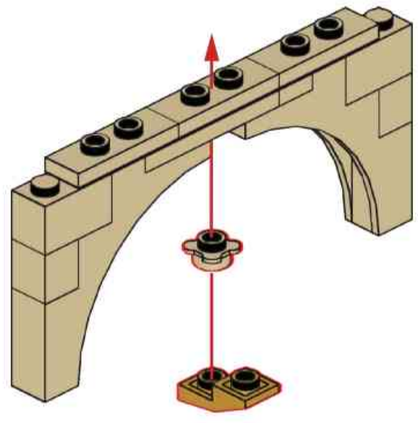

H43

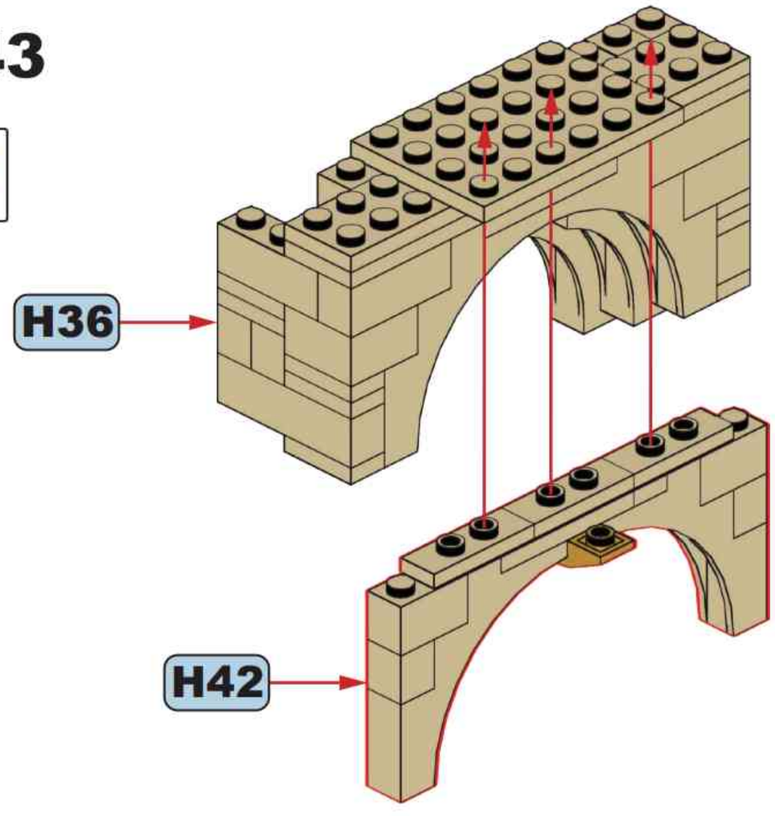

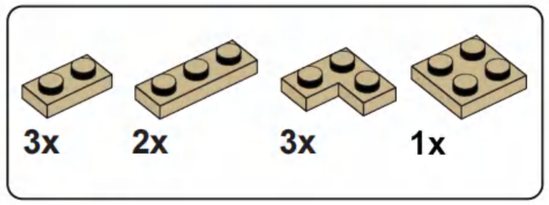

H44

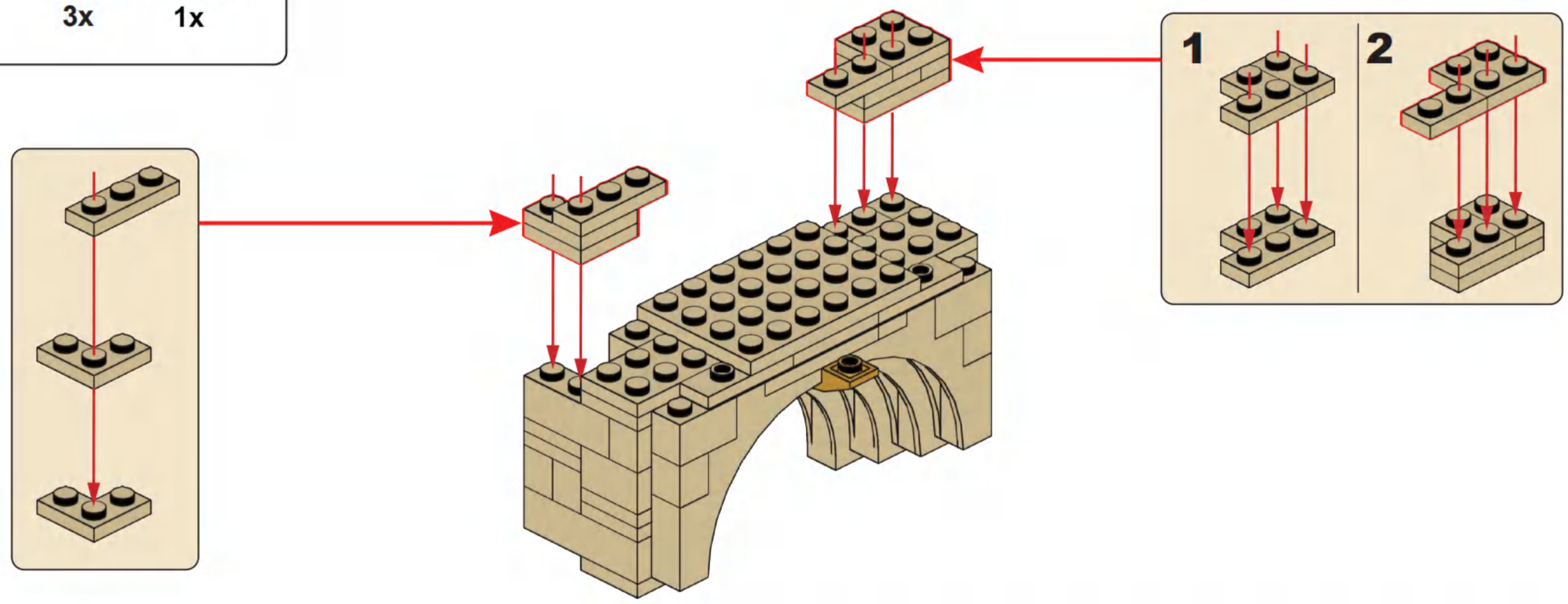

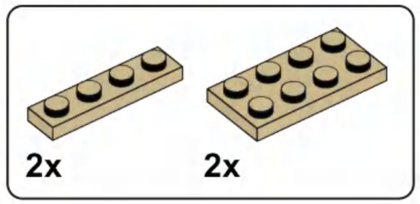

H45

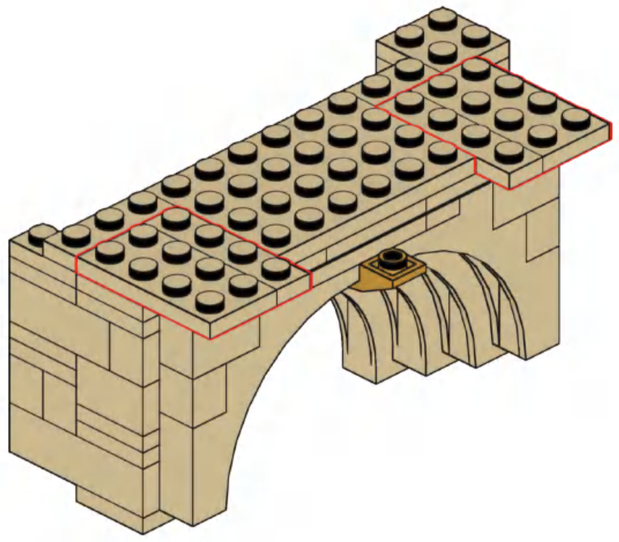

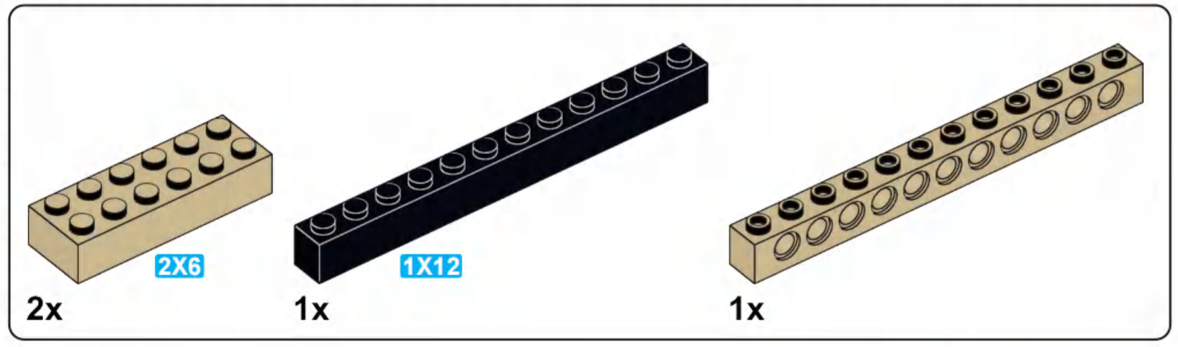

H46

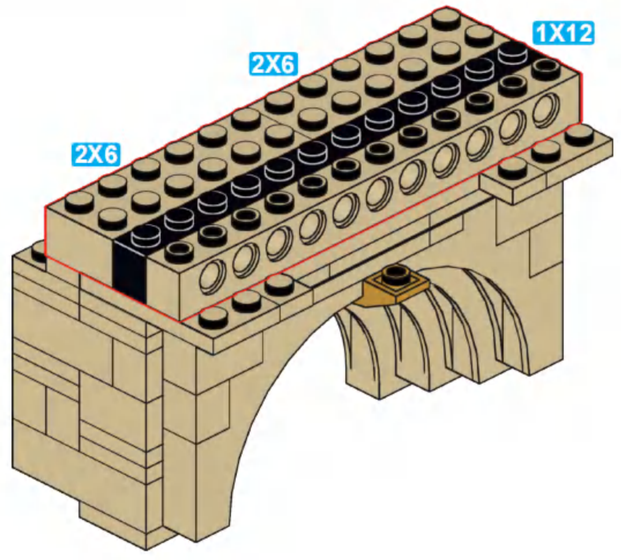

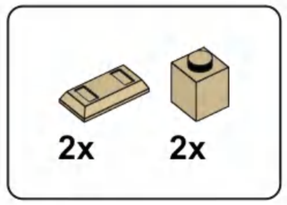

H47

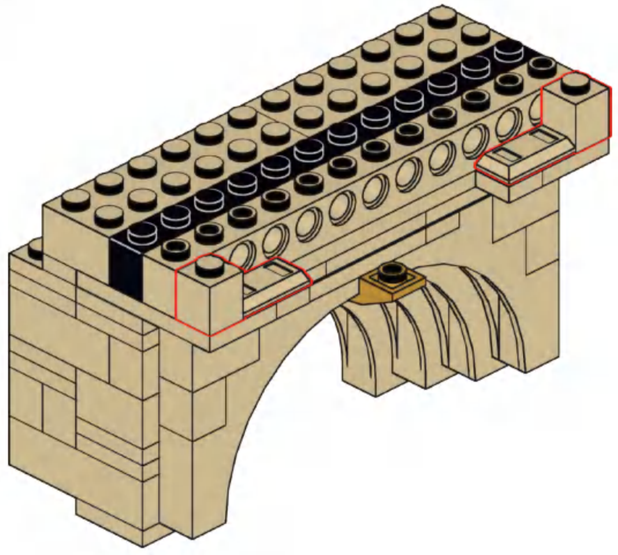

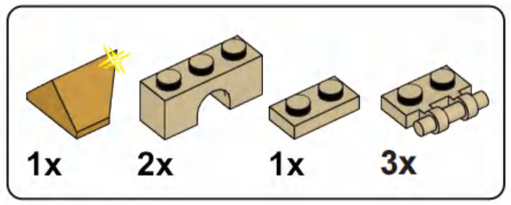

H48

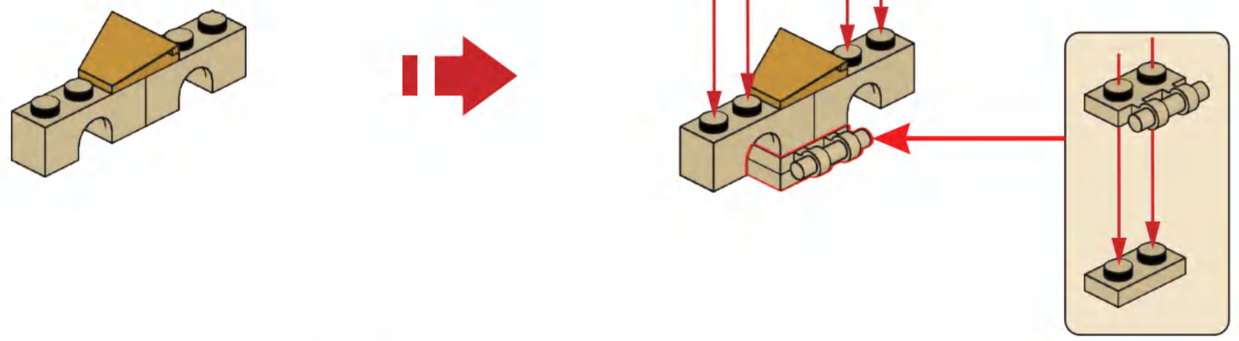

H49

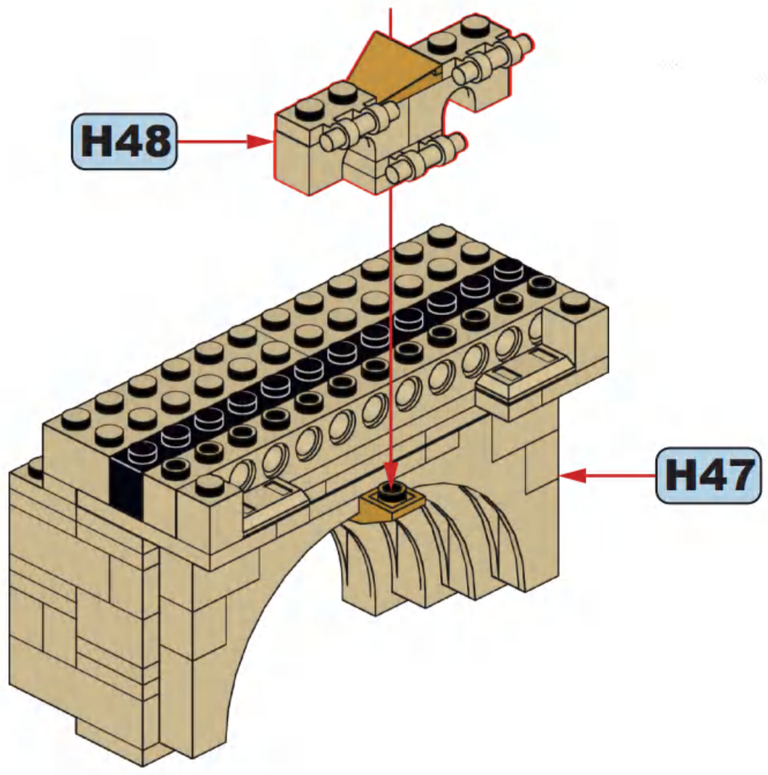

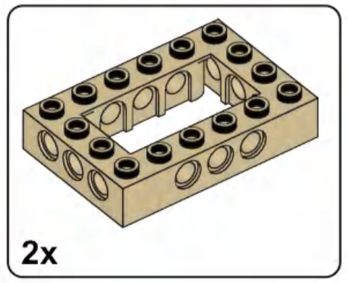

H50

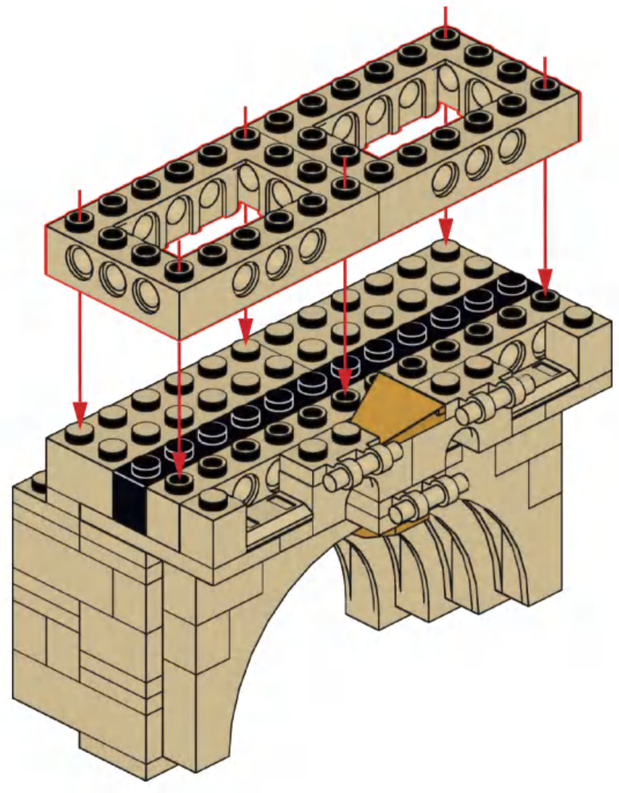

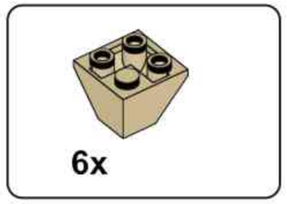

H51

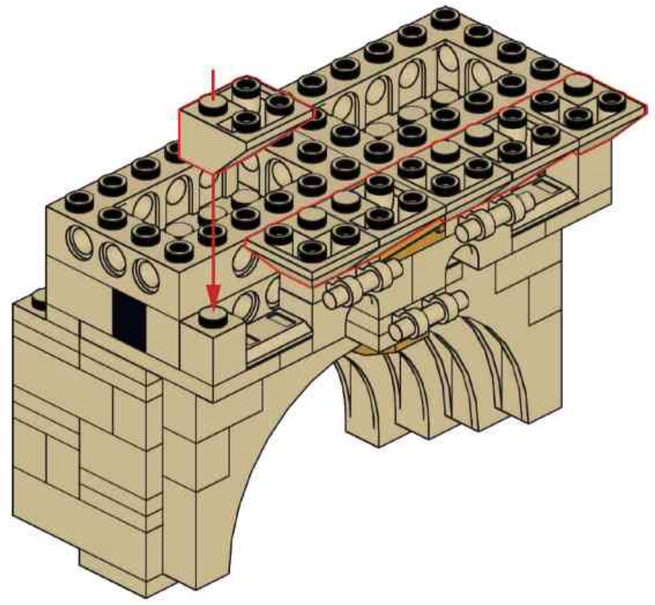

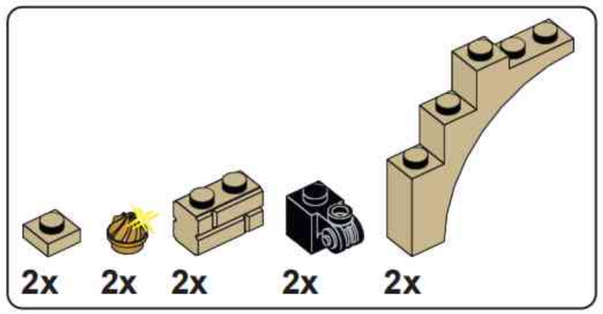

H52

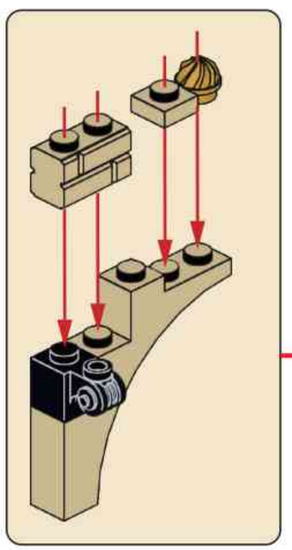

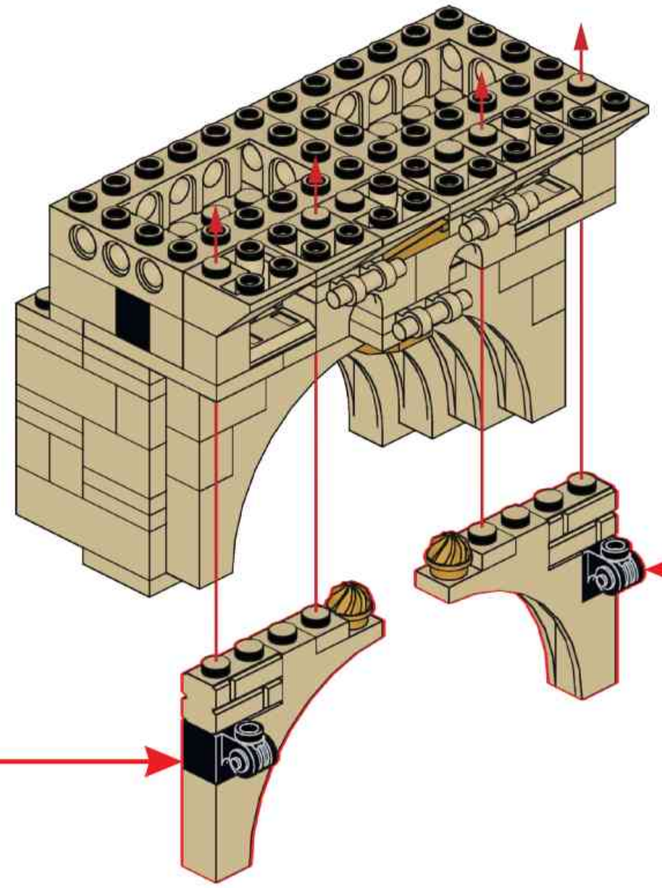

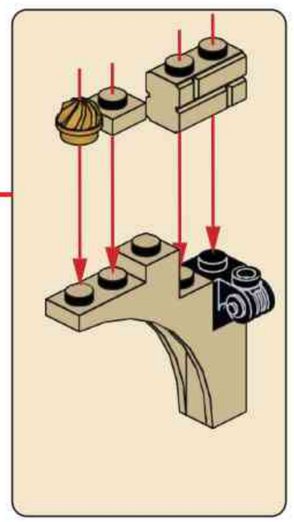

H53

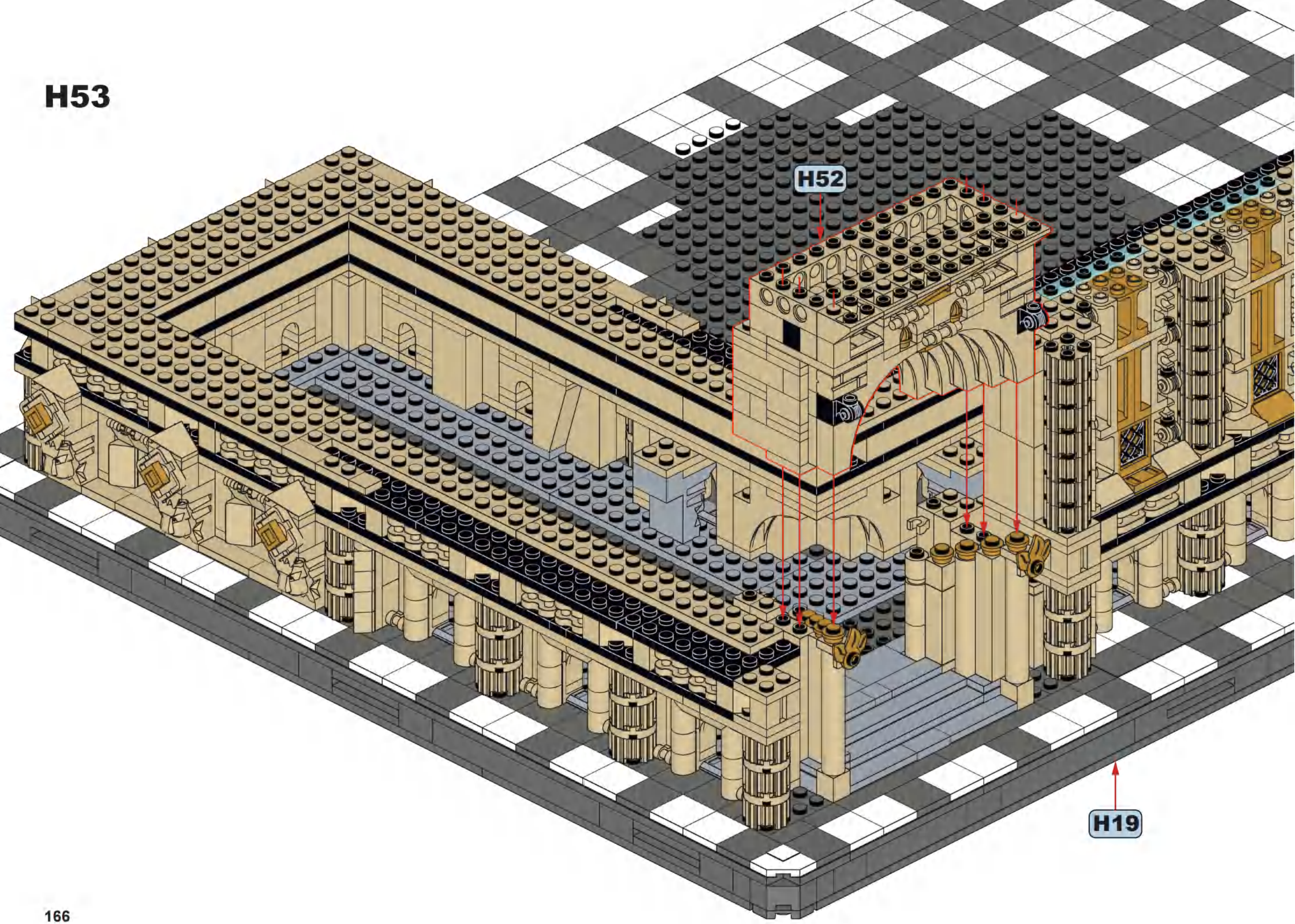

9

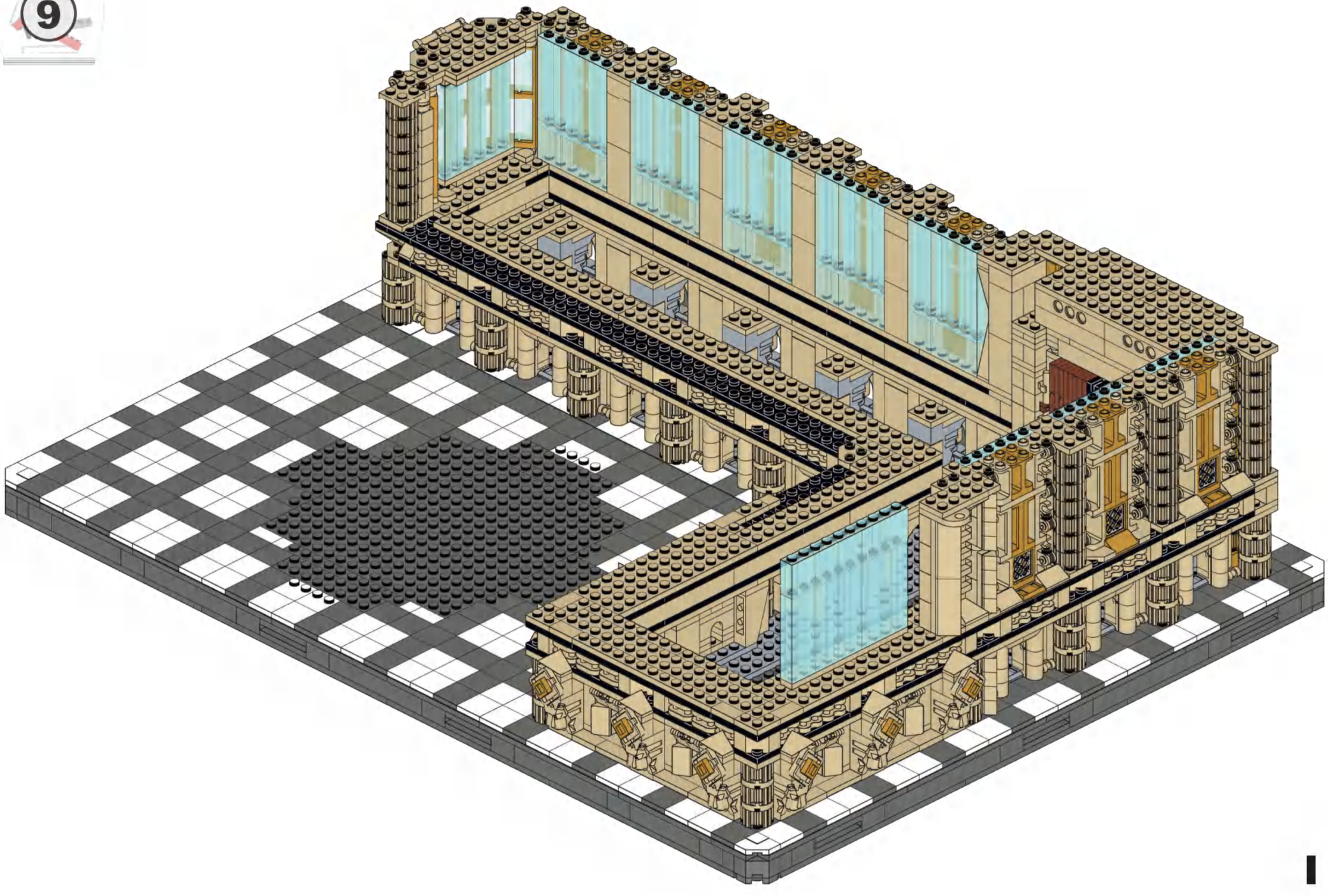

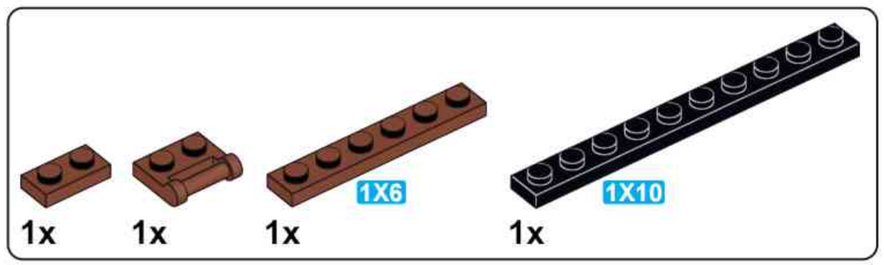

I1

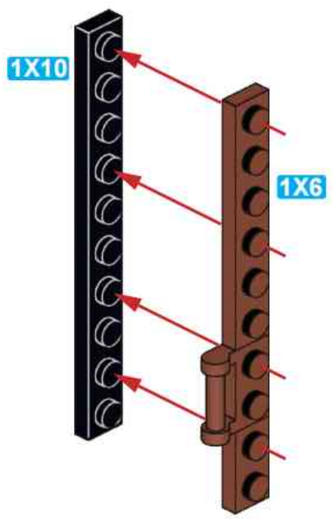

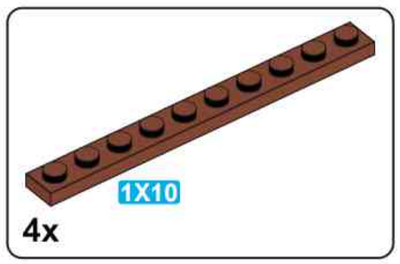

I2

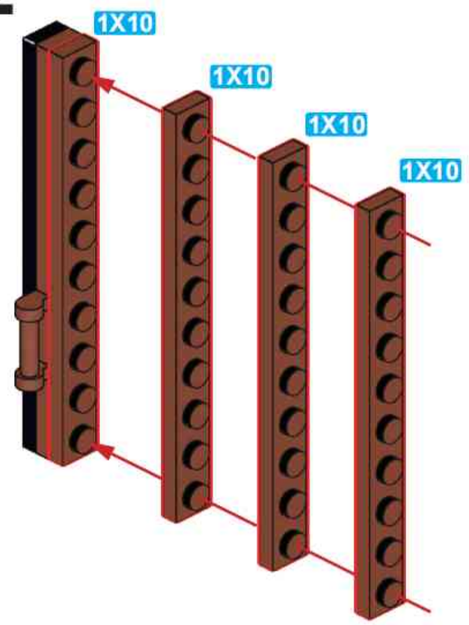

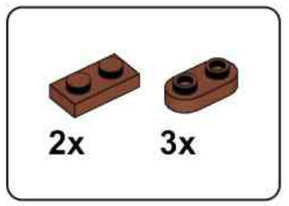

I3

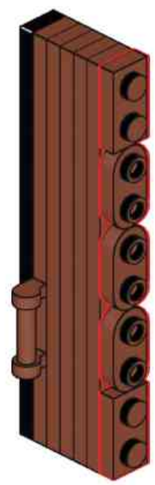

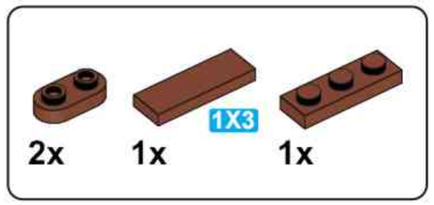

I4

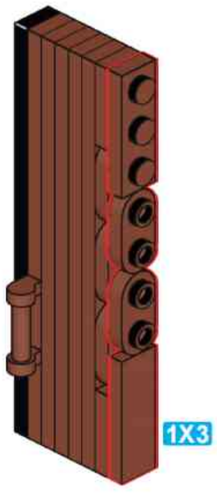

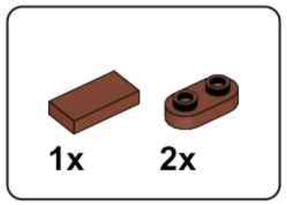

I5

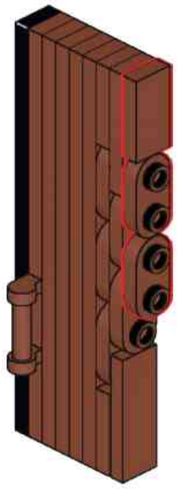

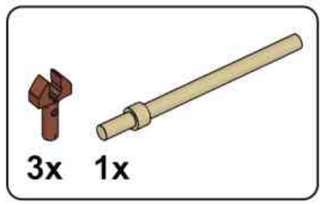

I6

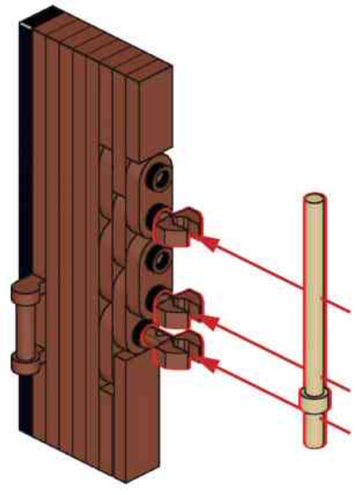

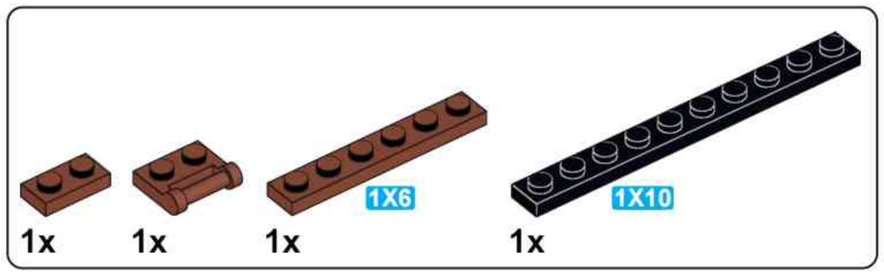

I7

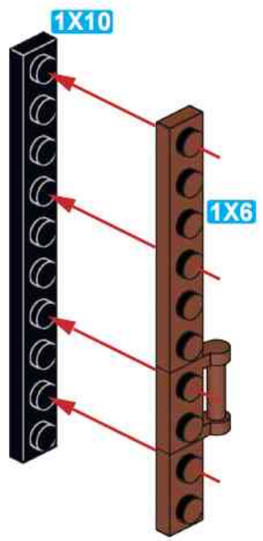

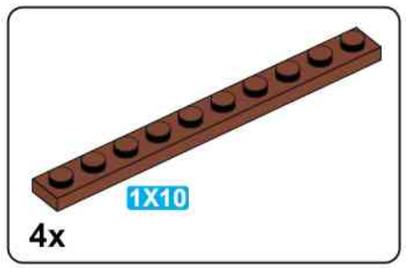

I8

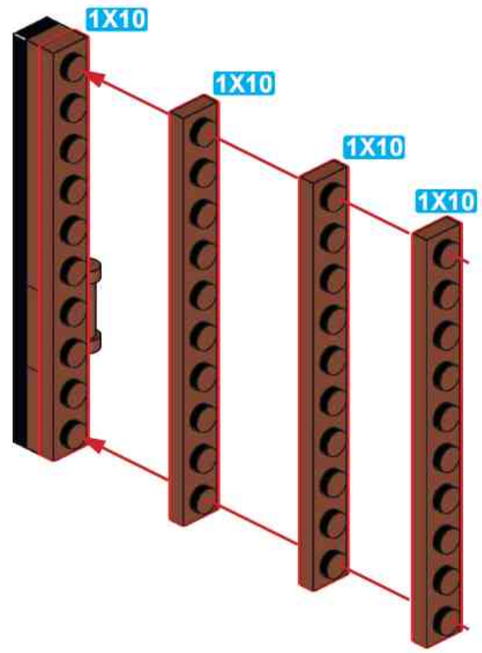

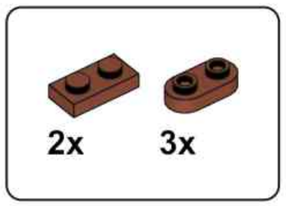

I9

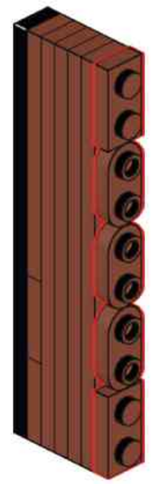

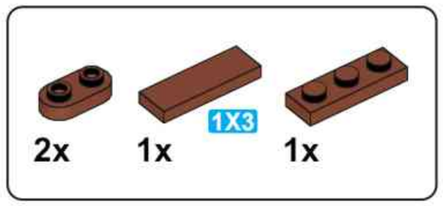

I10

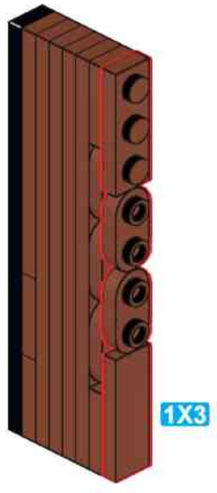

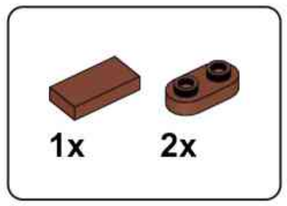

I11

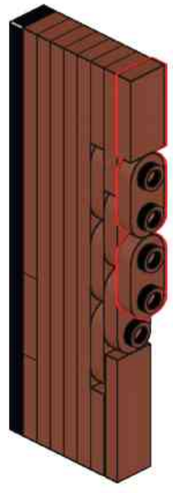

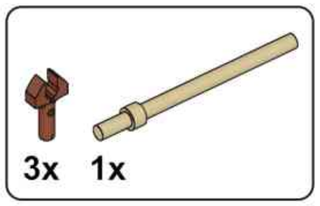

I12

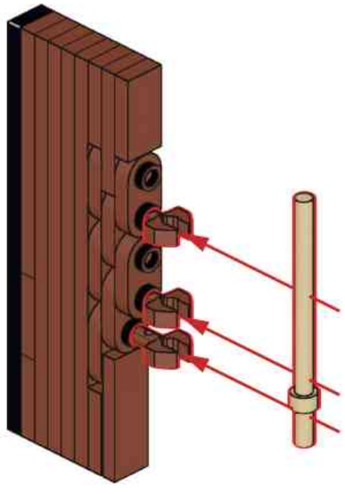

I13

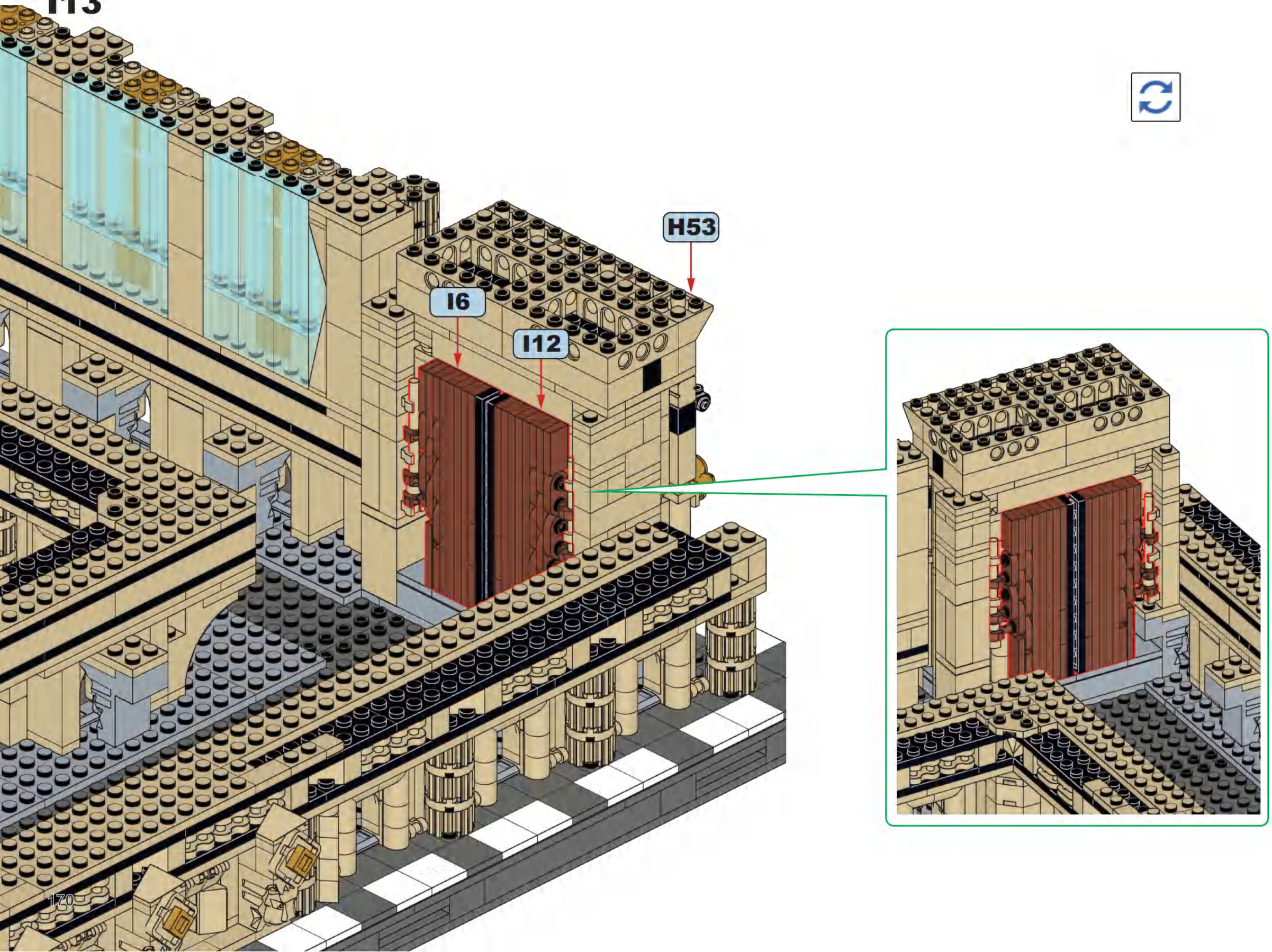

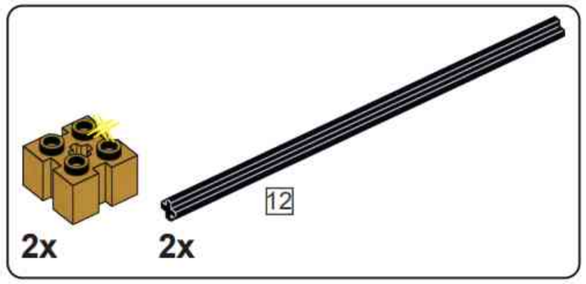

I14

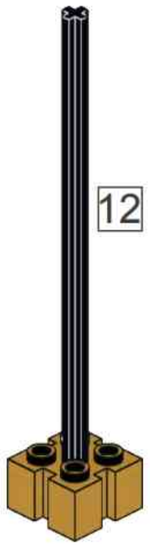

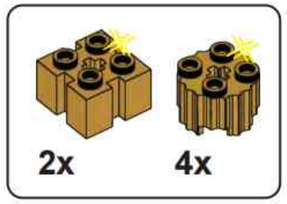

I15

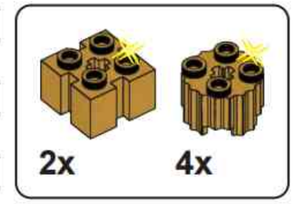

I16

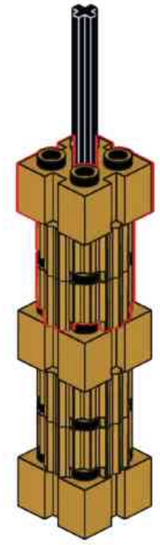

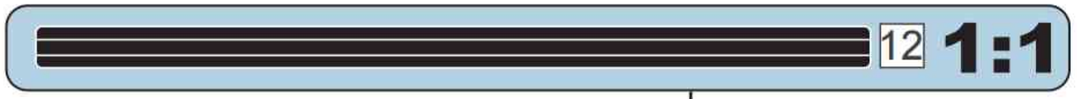

x2

x2

x2

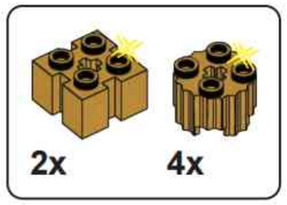

I17

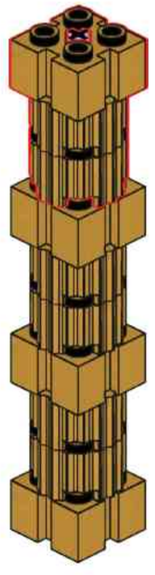

x2

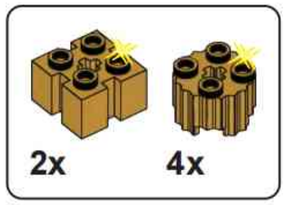

I18

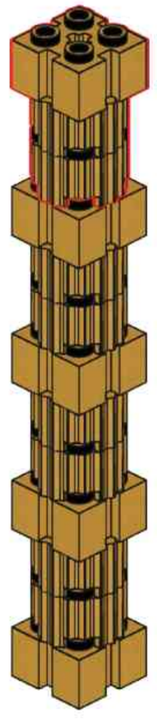

x2

I19

I13

I18

I18

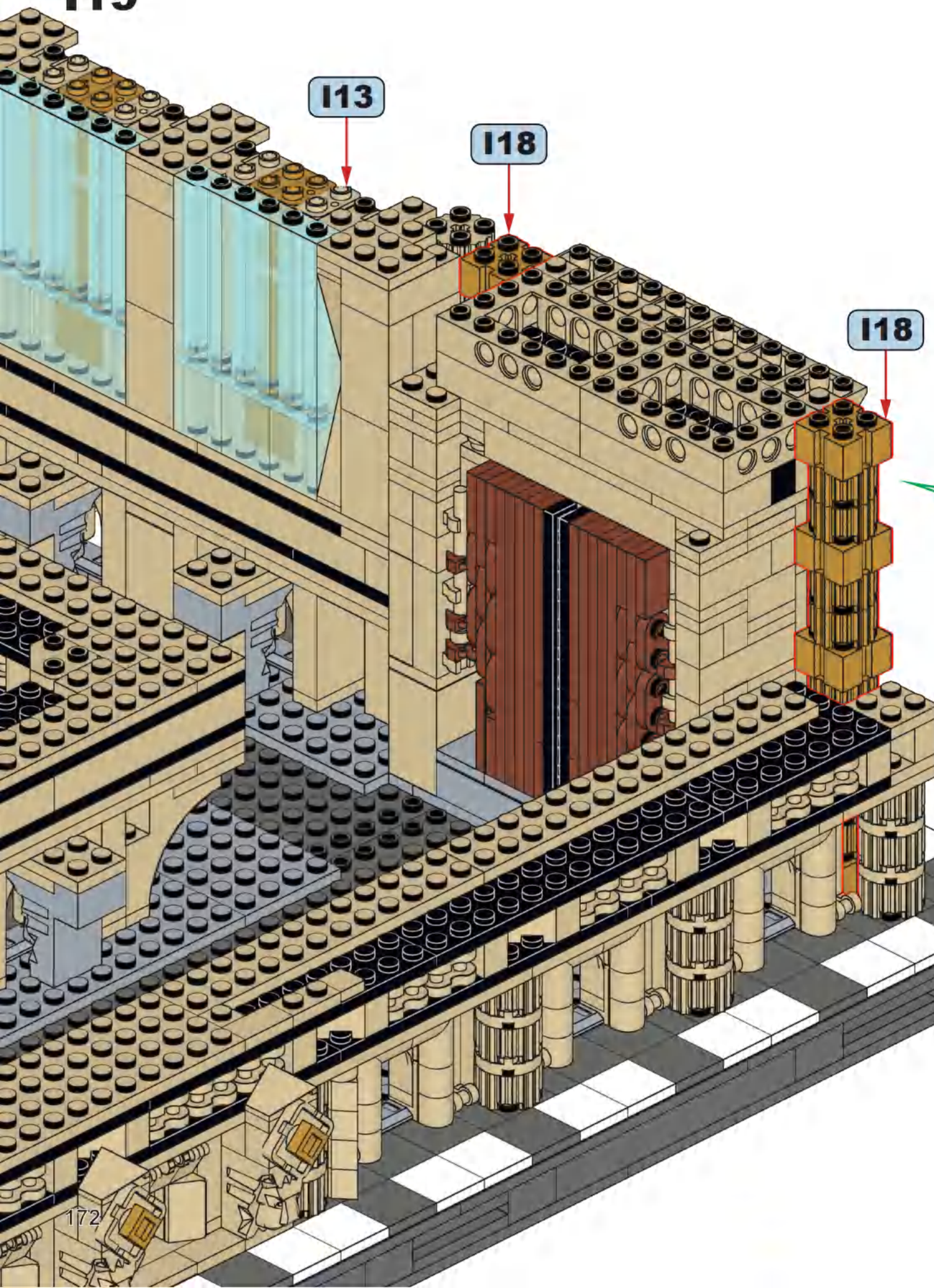

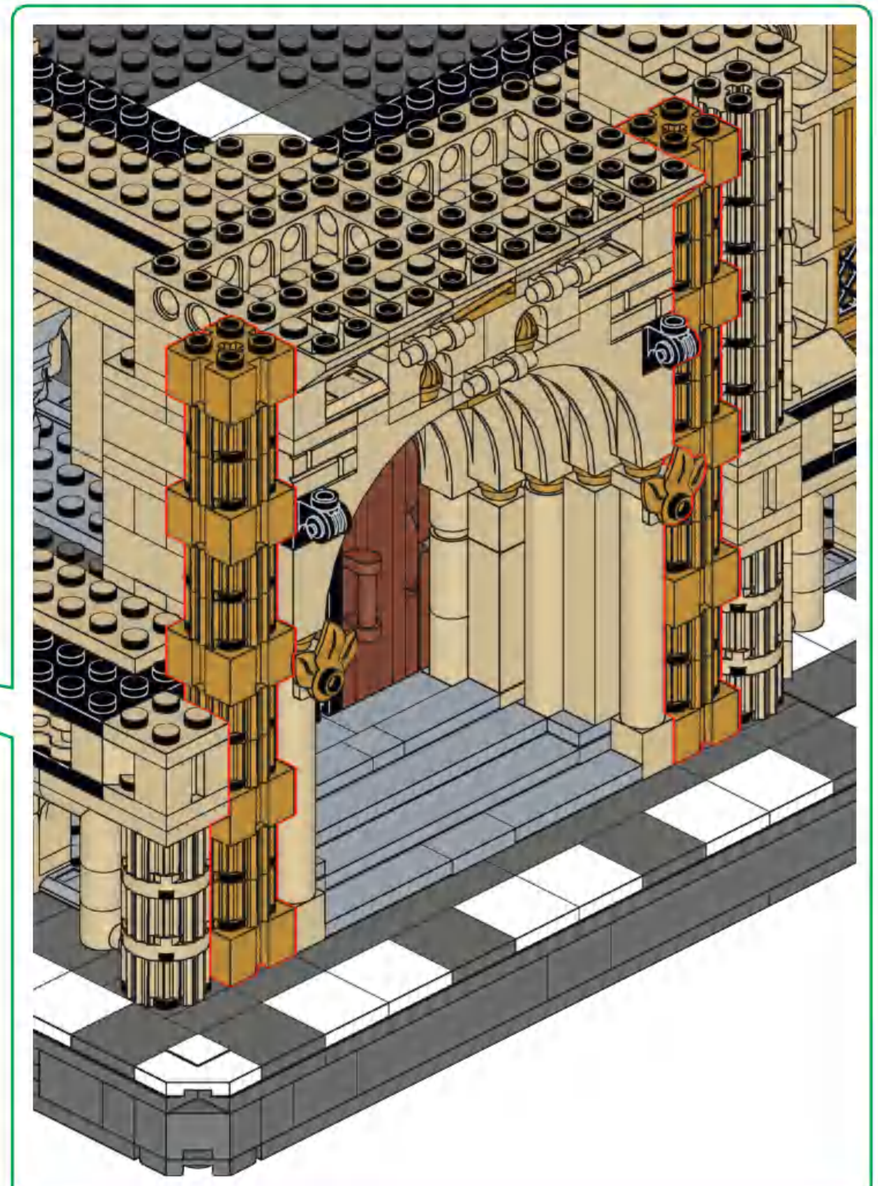

1x

I20

9x 3x 1X6 9x

I21

1X6

x3

3x

122

2x 1x 4x 2x

123

1x 1x 1X6 2x 2x

I24

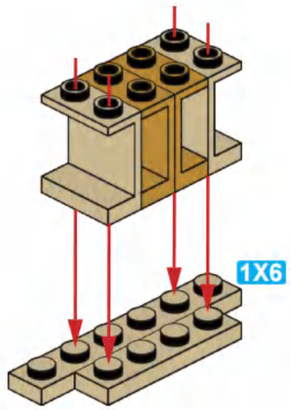

2x 2x

I25

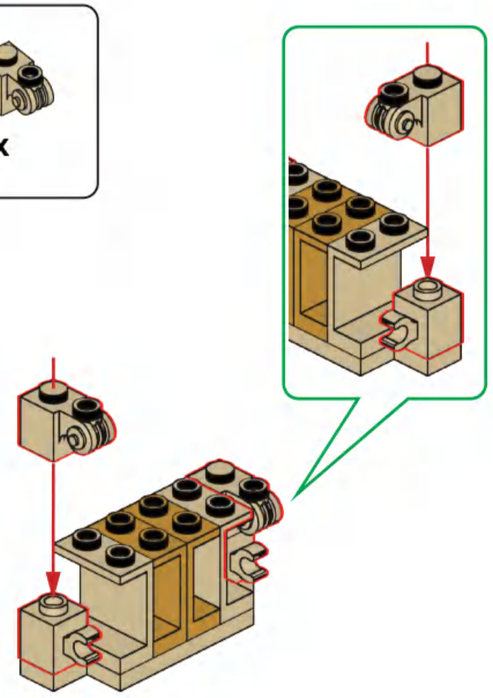

2x 2x

I26

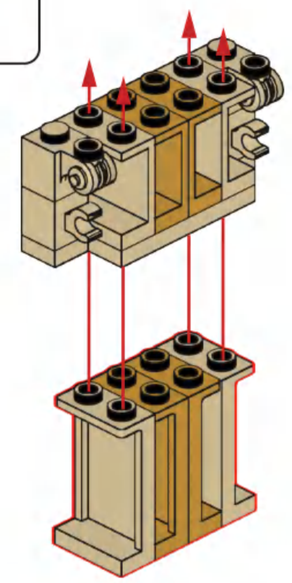

1x 2x

I27

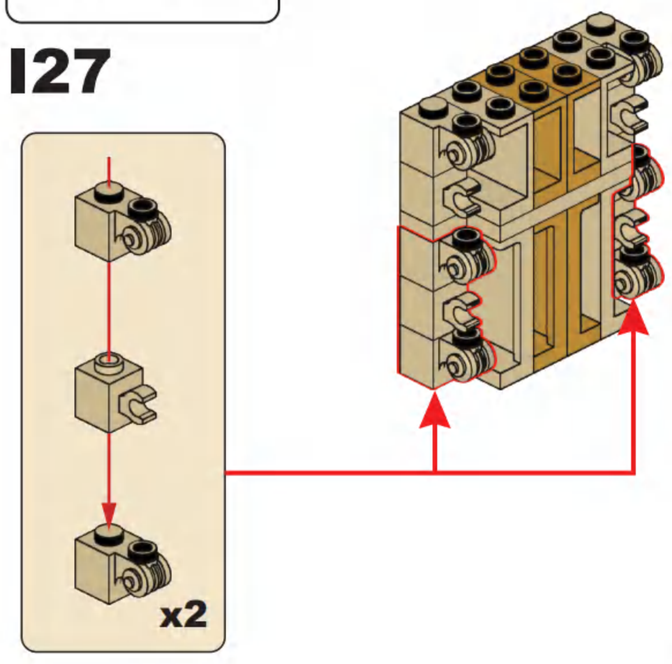

1x 1x 1x

I28

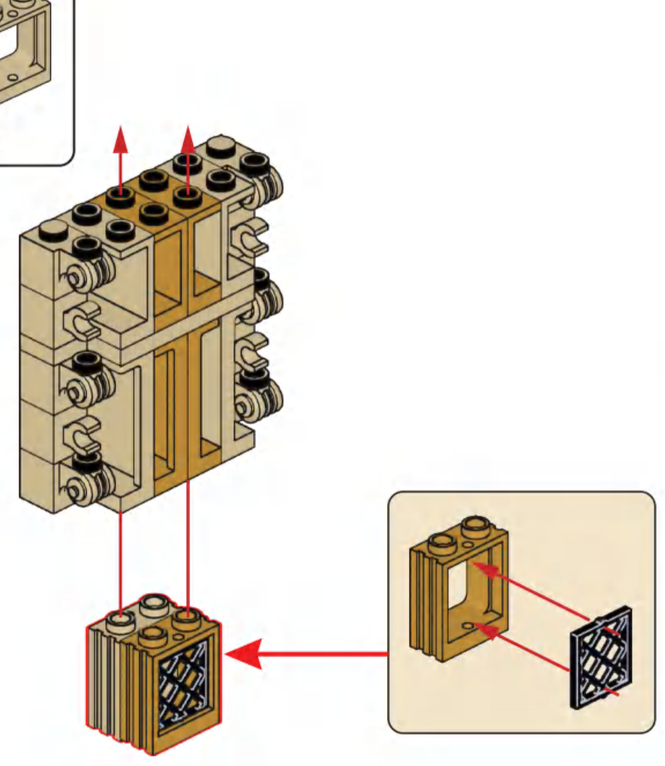

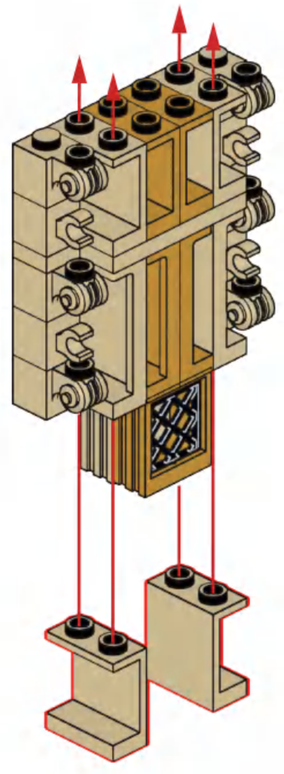

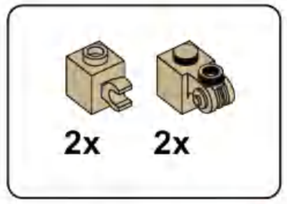

I29

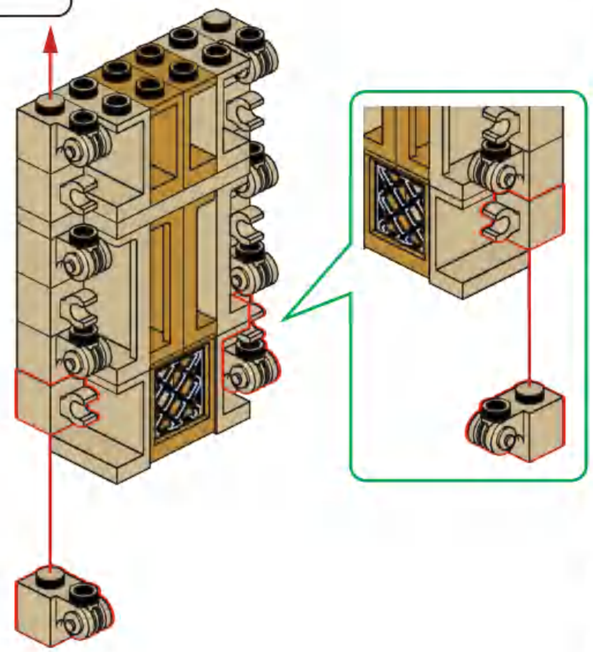

I30

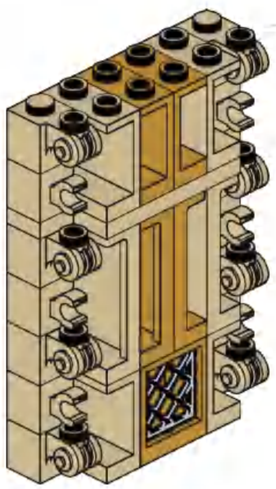

x3

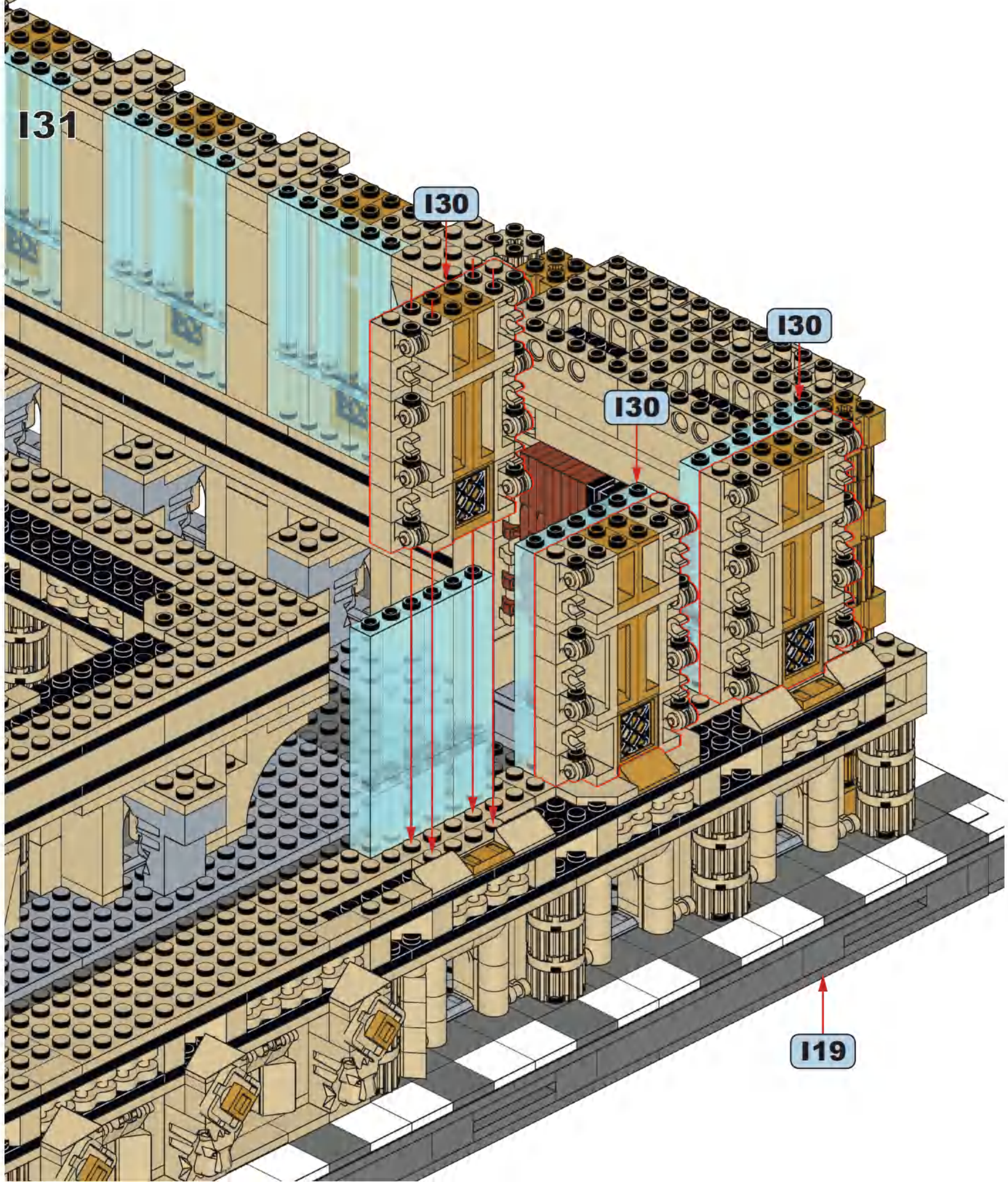

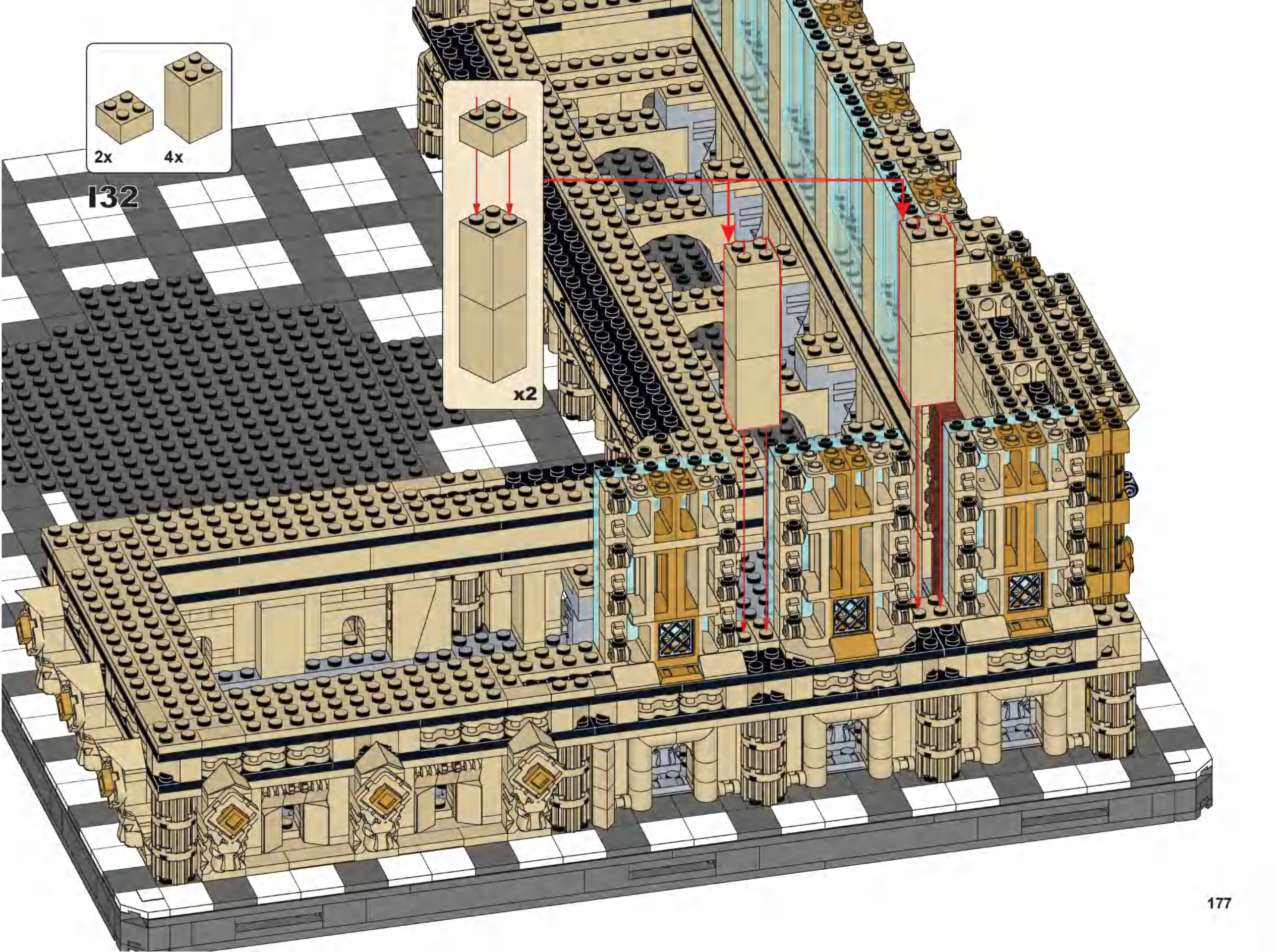
2x
4x
132
x2

3x

21x

133

x3

134

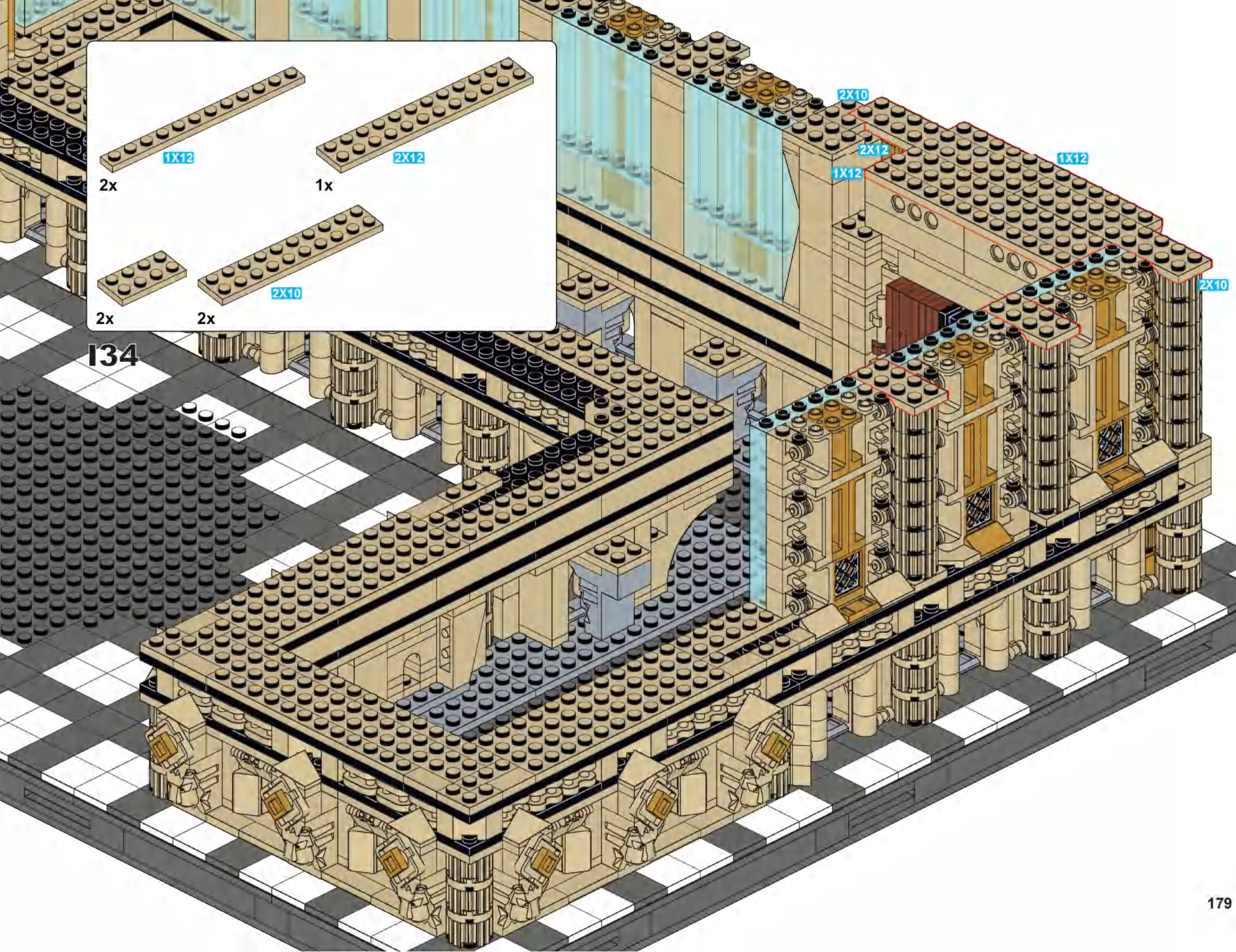

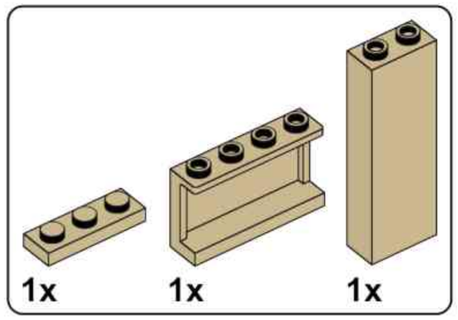

I35

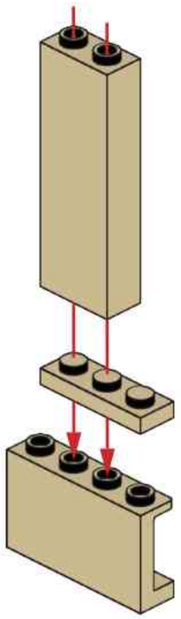

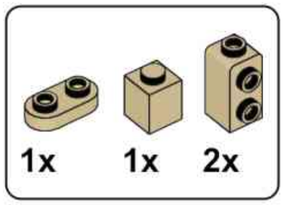

I36

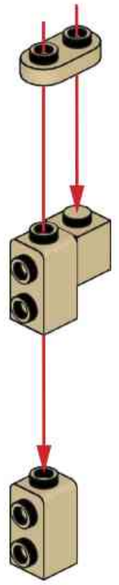

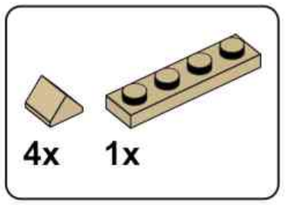

I37

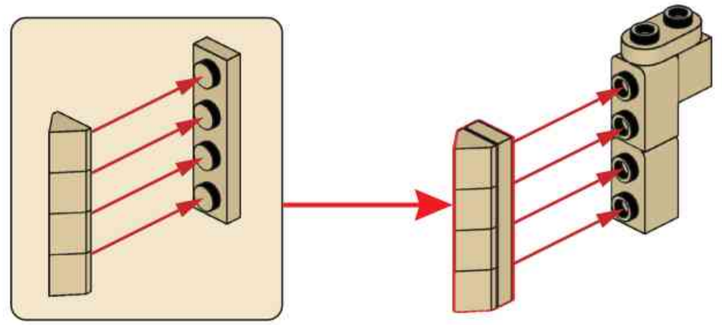

I38

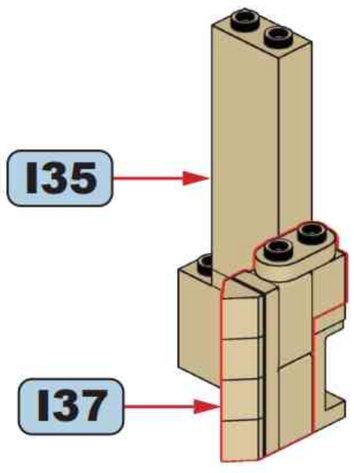

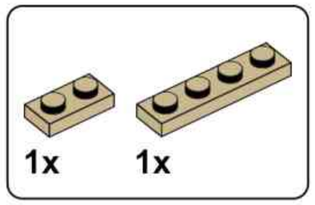

I39

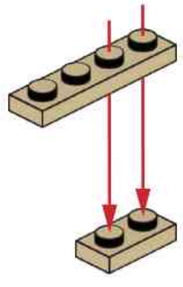

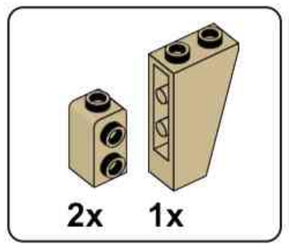

I40

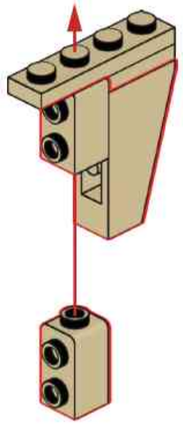

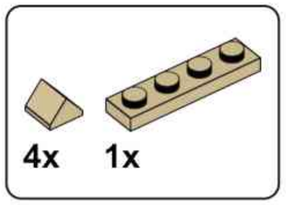

I41

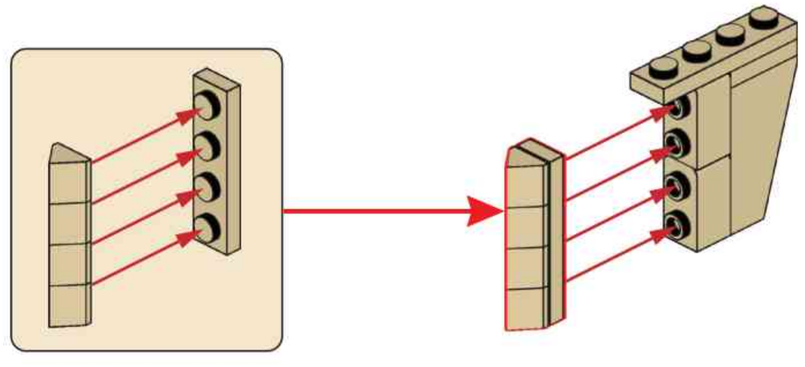

I42

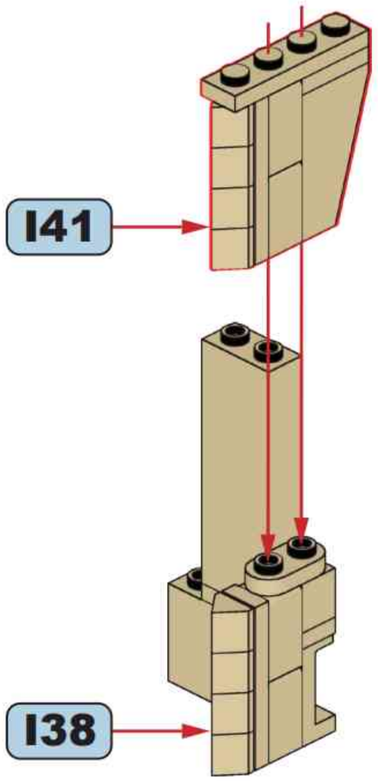

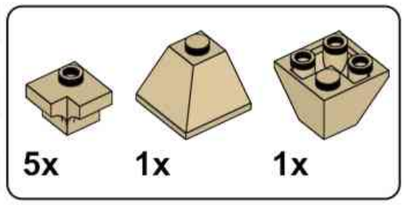

I43

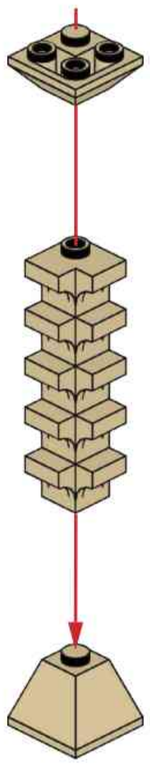

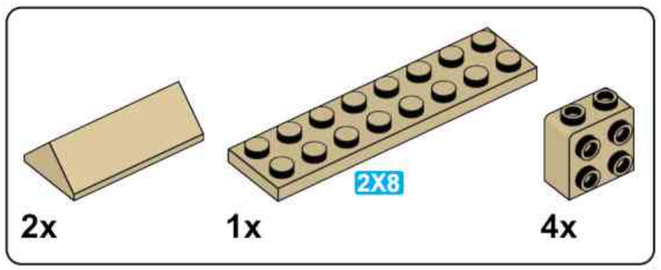

I44

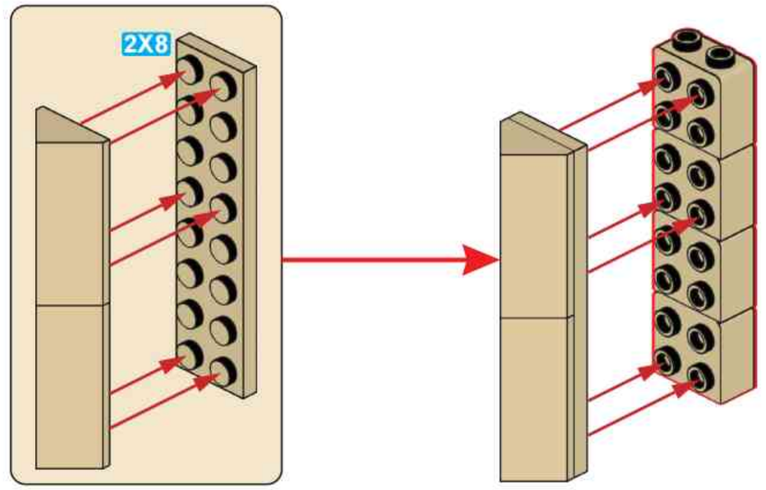

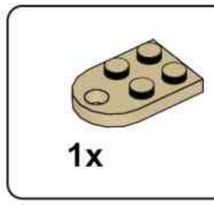

I45

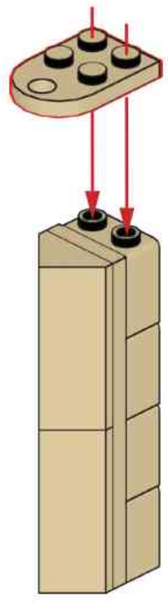

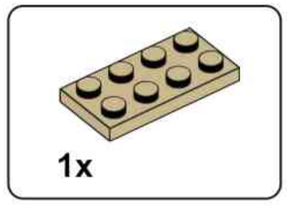

I46

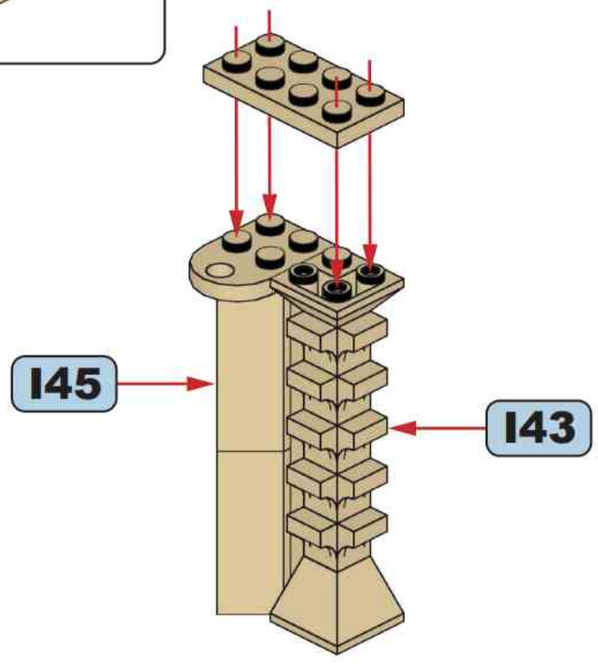

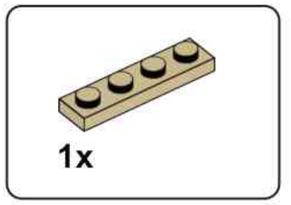

I47

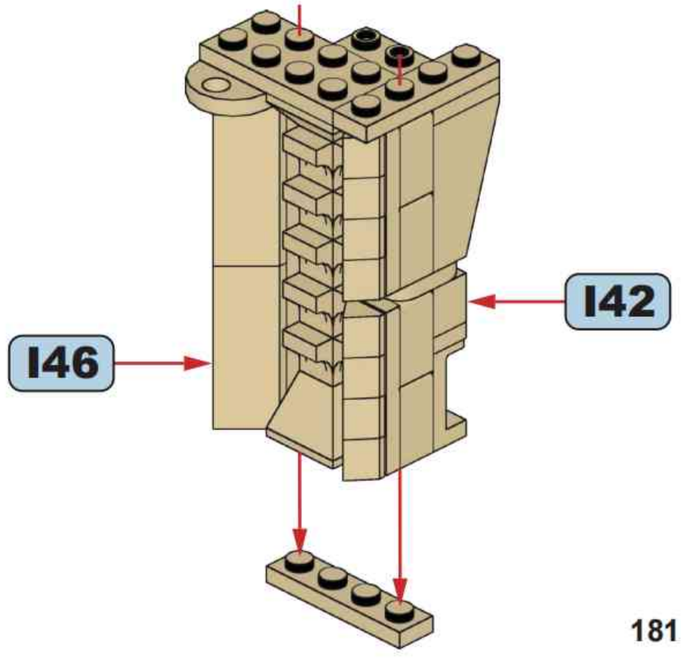

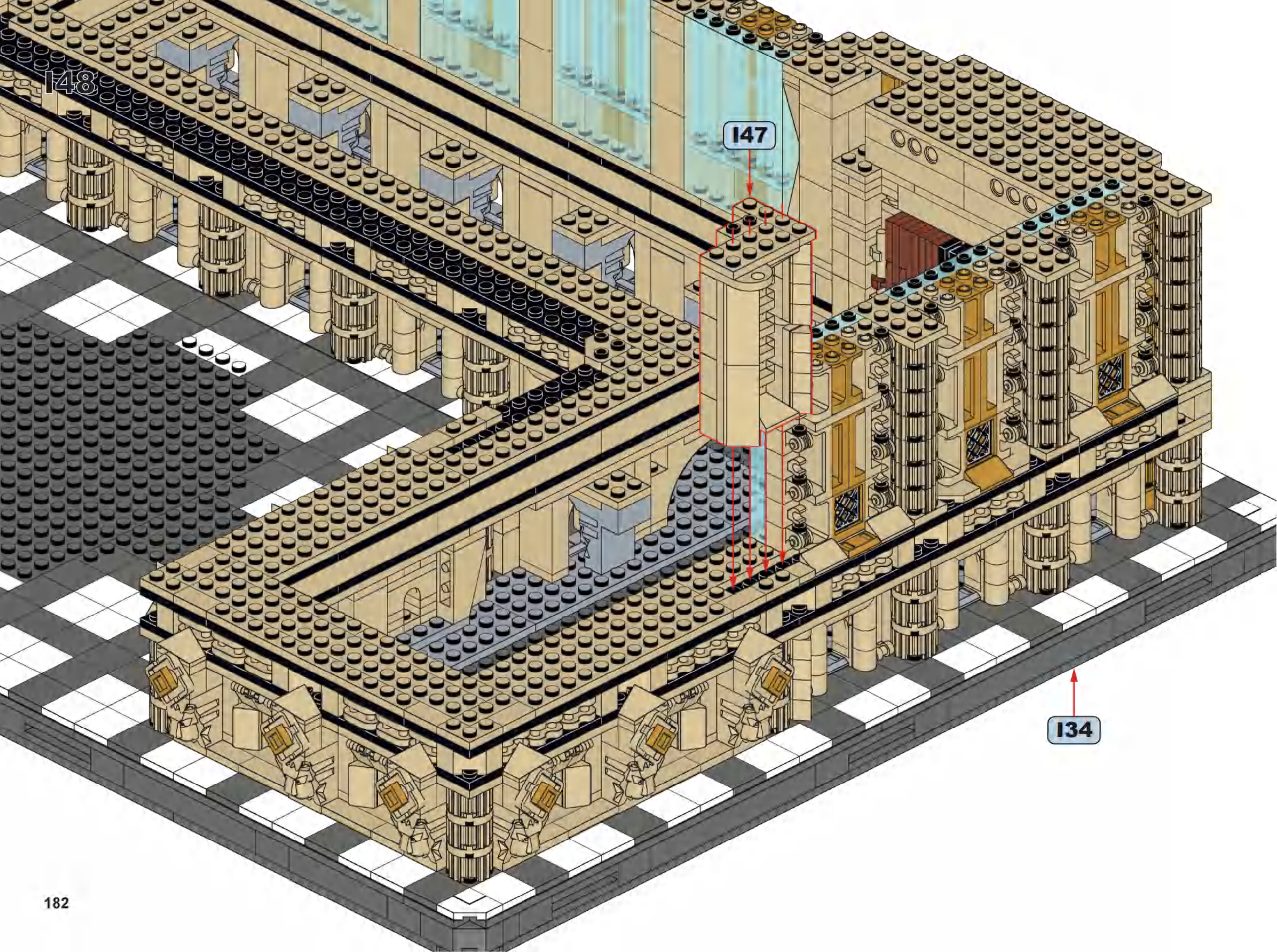
148
147
134

149

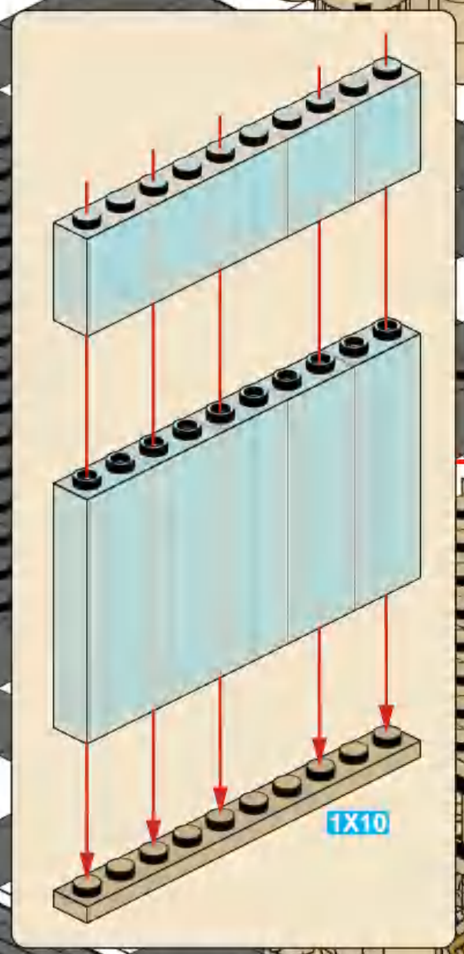

10

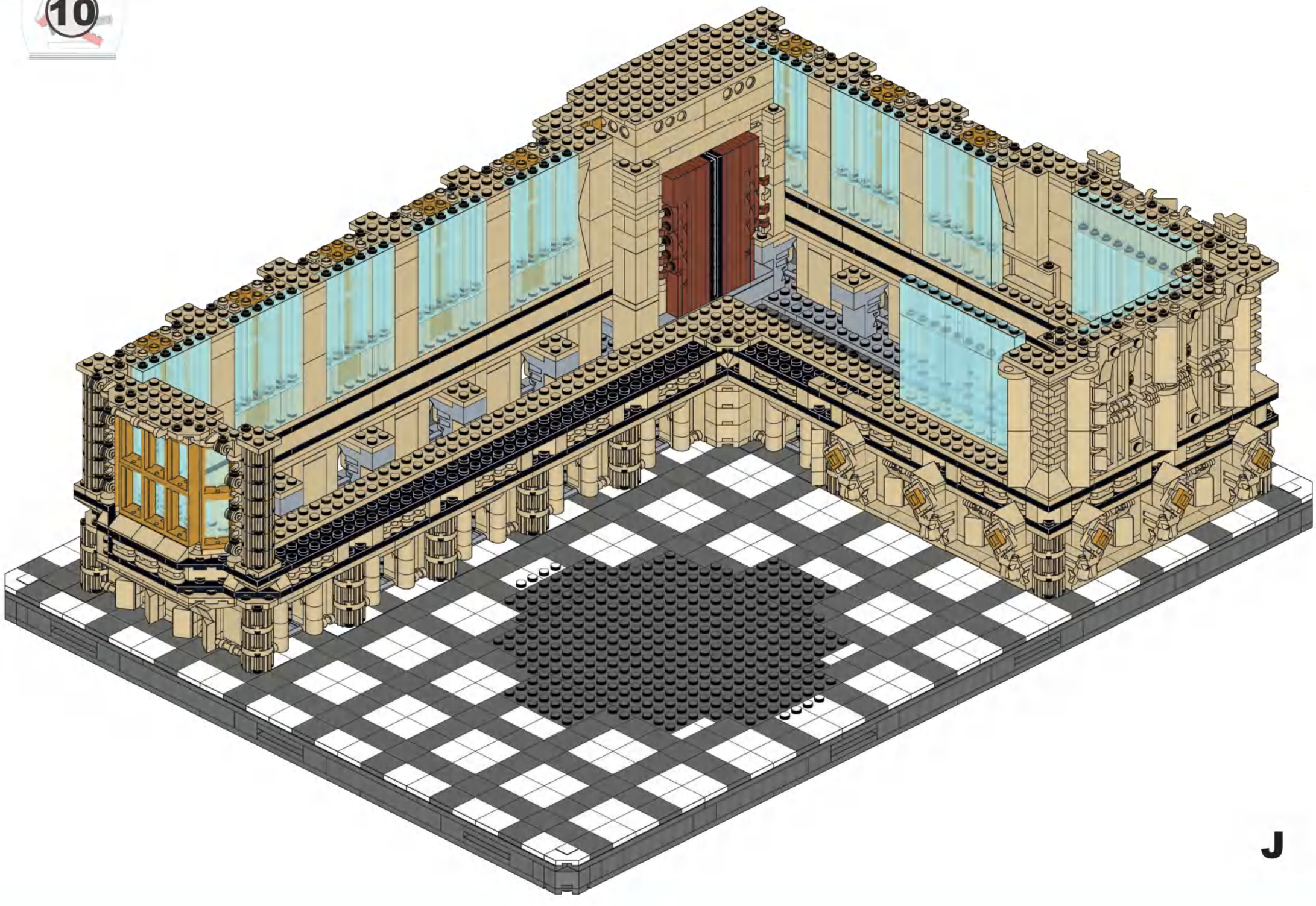

J

1x 1x 1x 1X10

J1

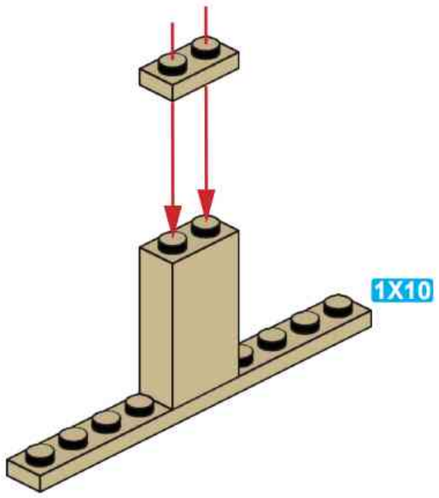

2x 2x

J2

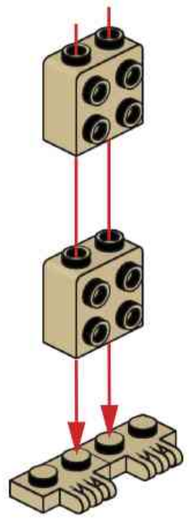

2x 2x

J3

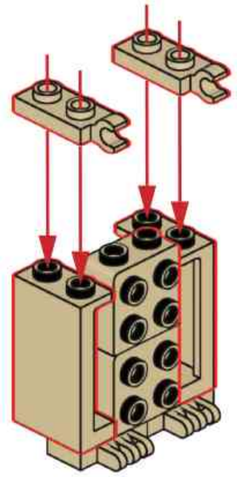

1x

J4

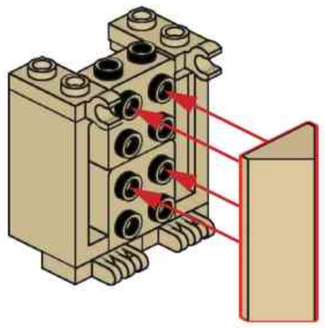

J5

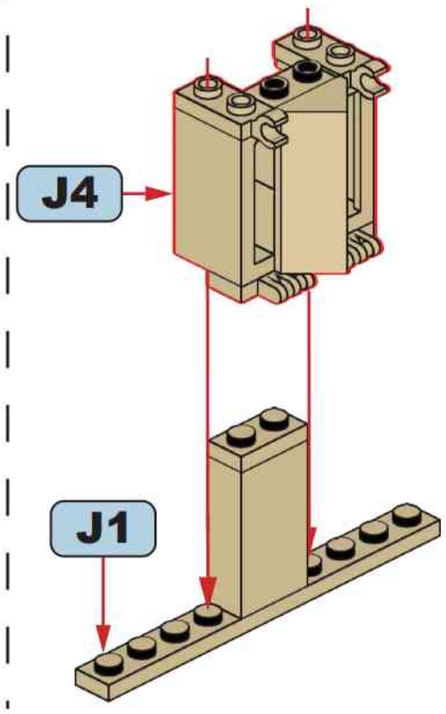

2x 2x 2x 4x

J6

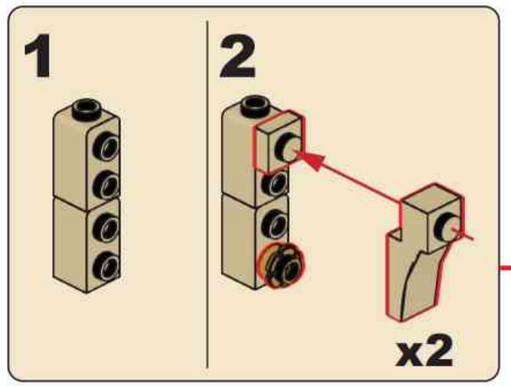

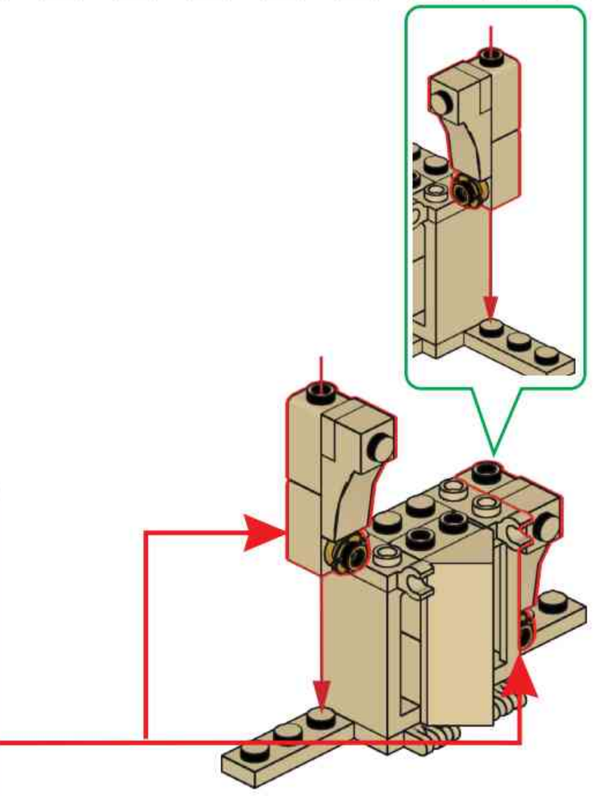

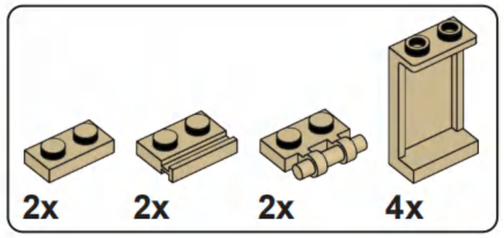

J7

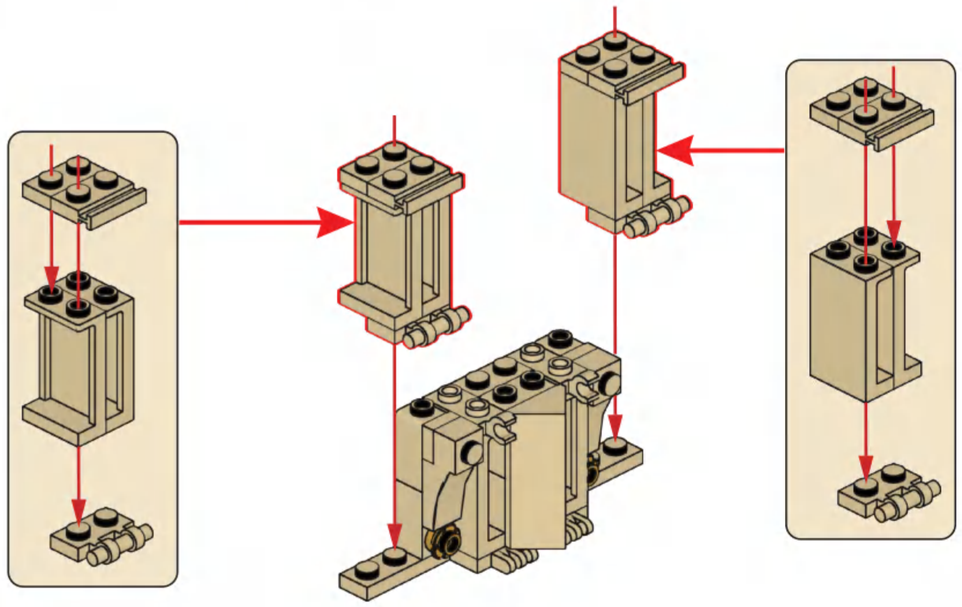

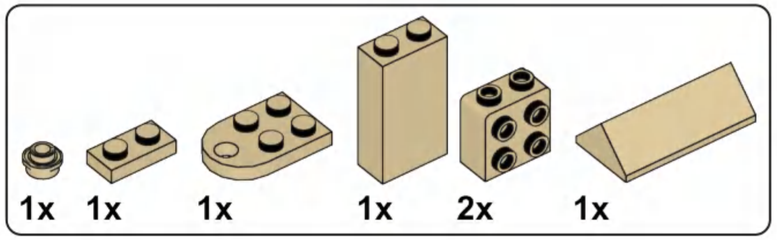

J8

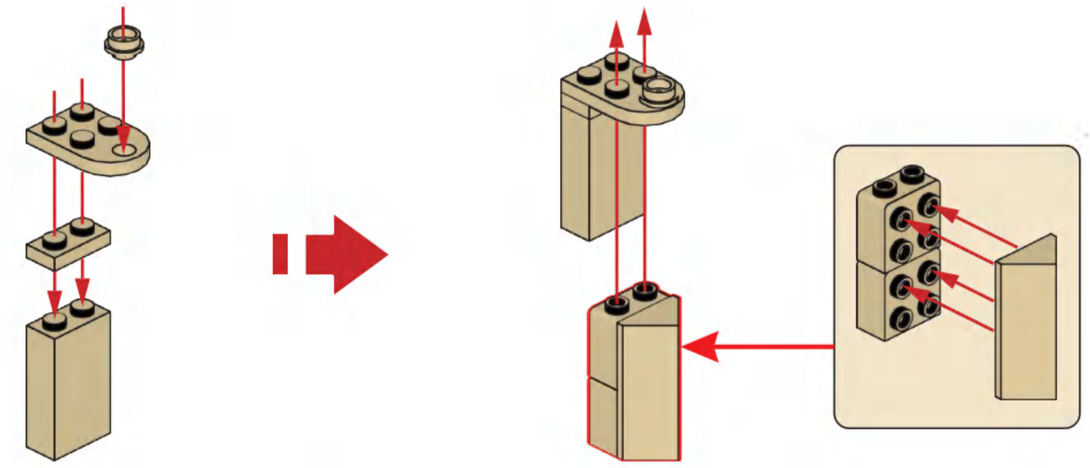

J9

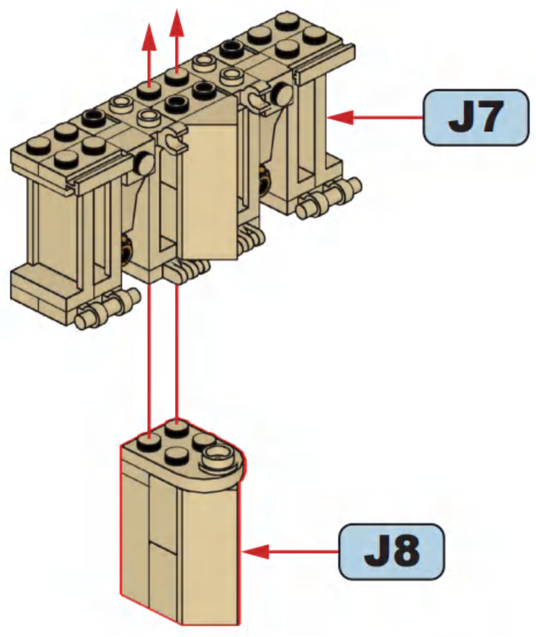

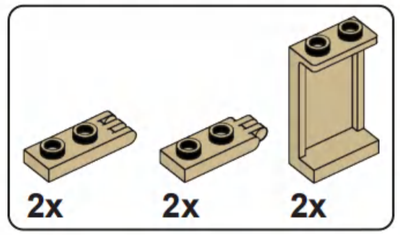

J10

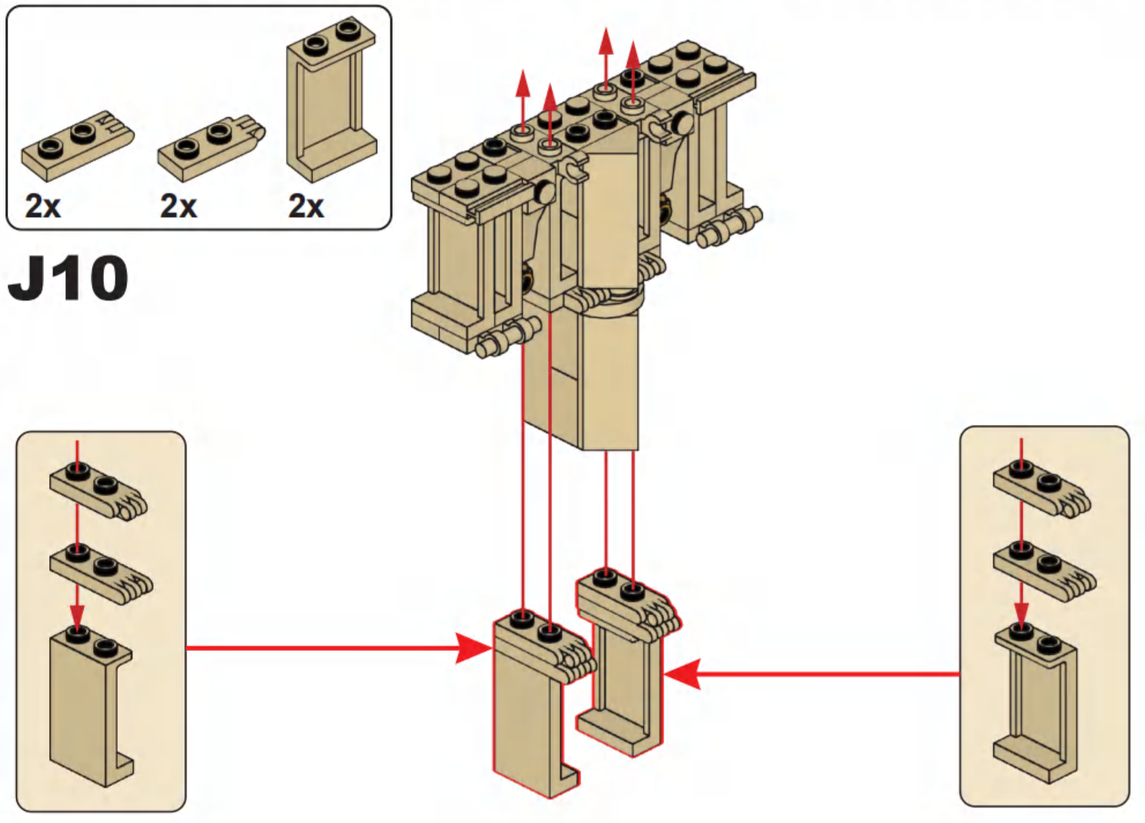

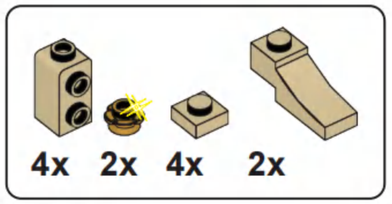

J11

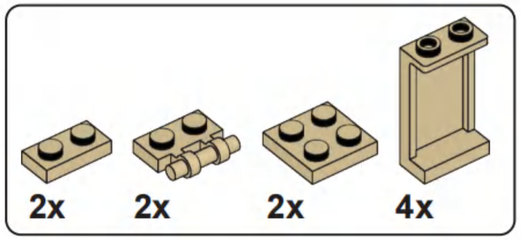

J12

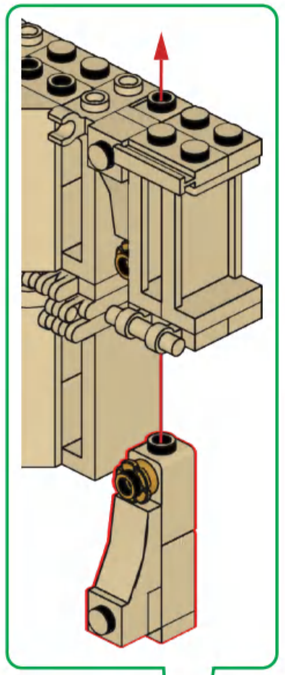

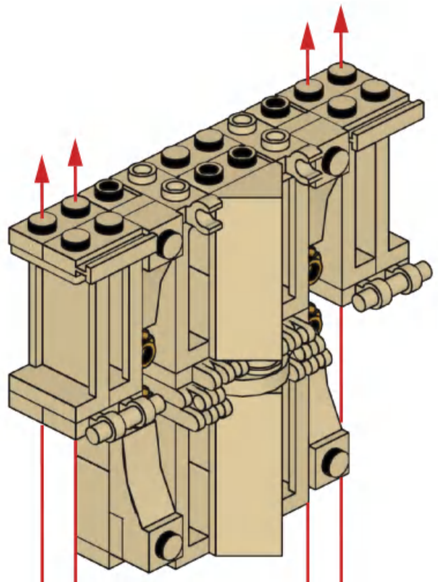

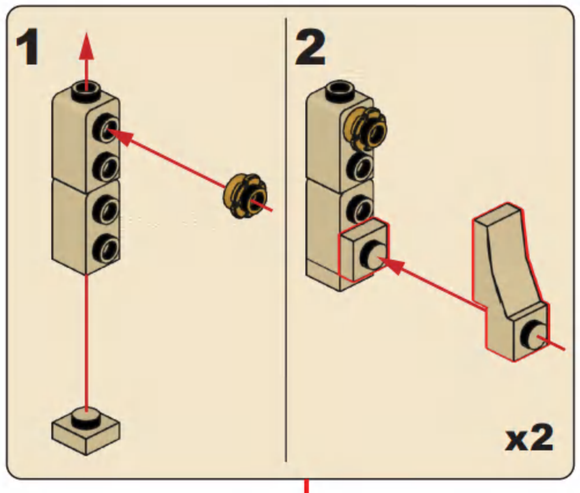

J13

J12

I49

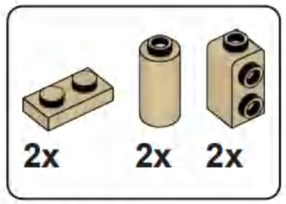

J14

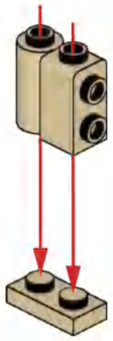

x2

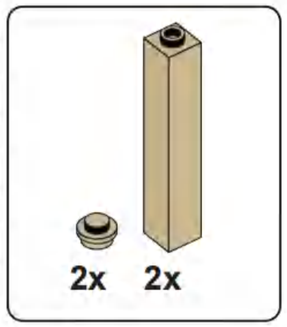

J15

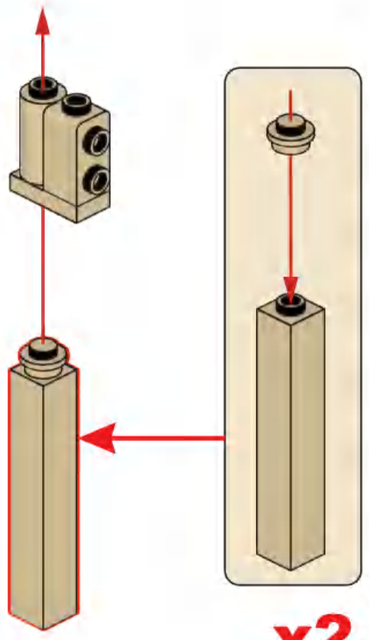

x2

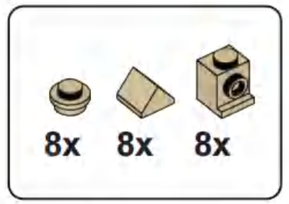

J16

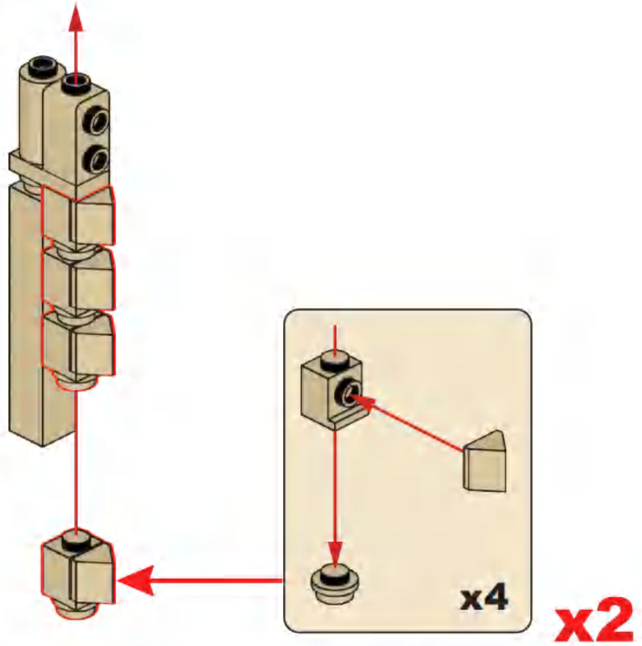

x2

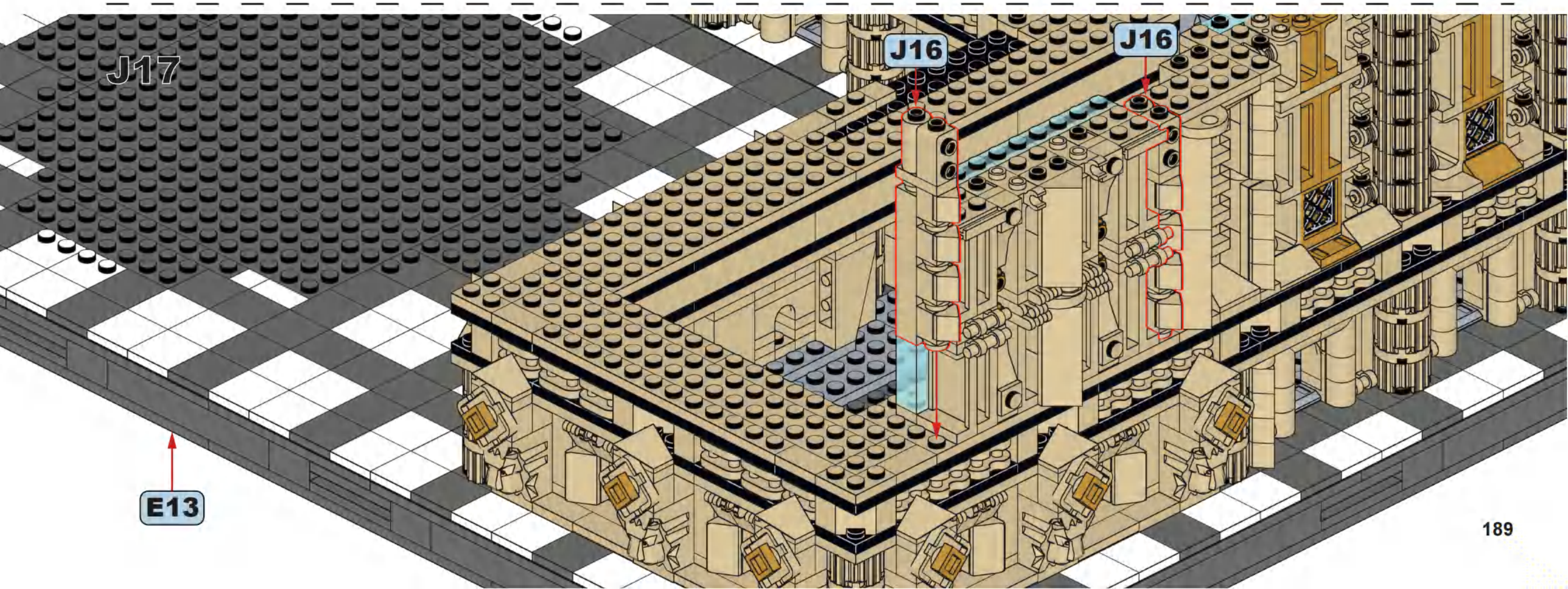

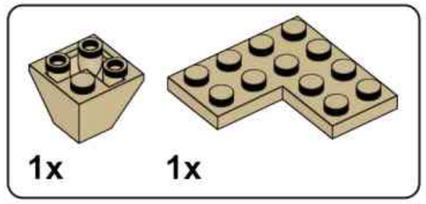

J18

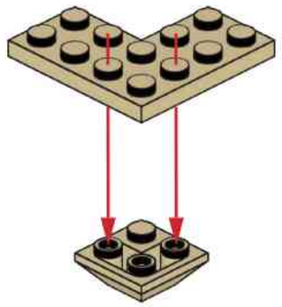

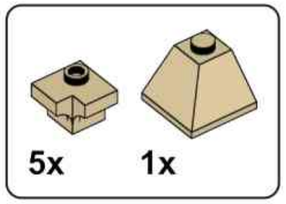

J19

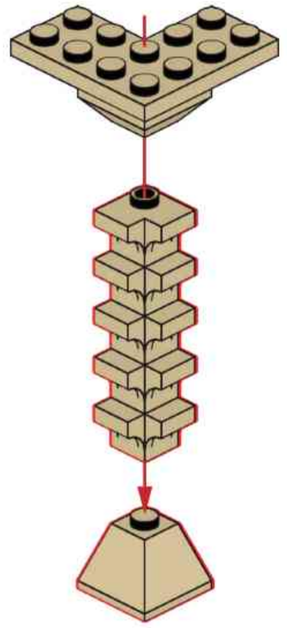

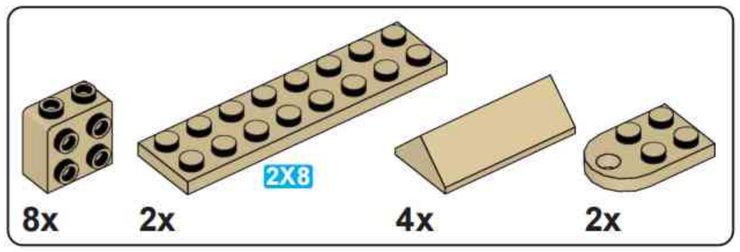

J20

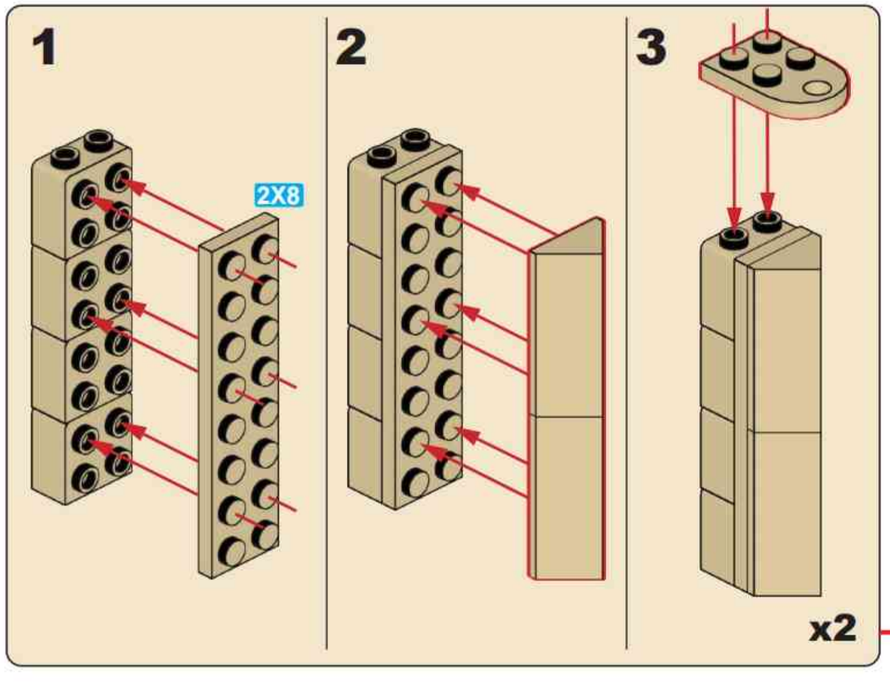

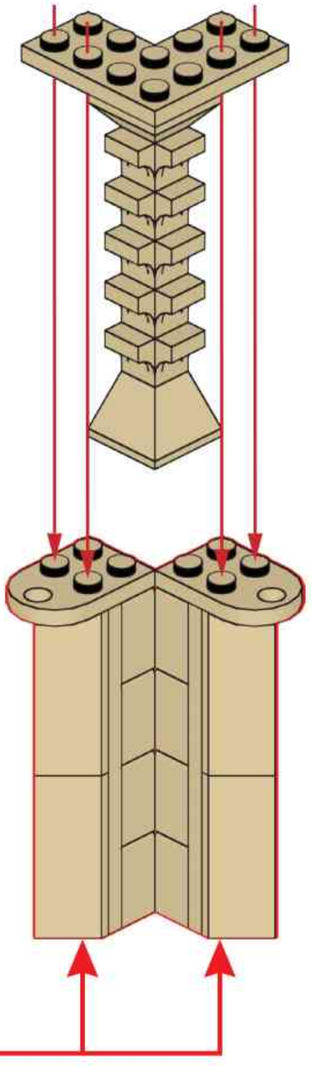

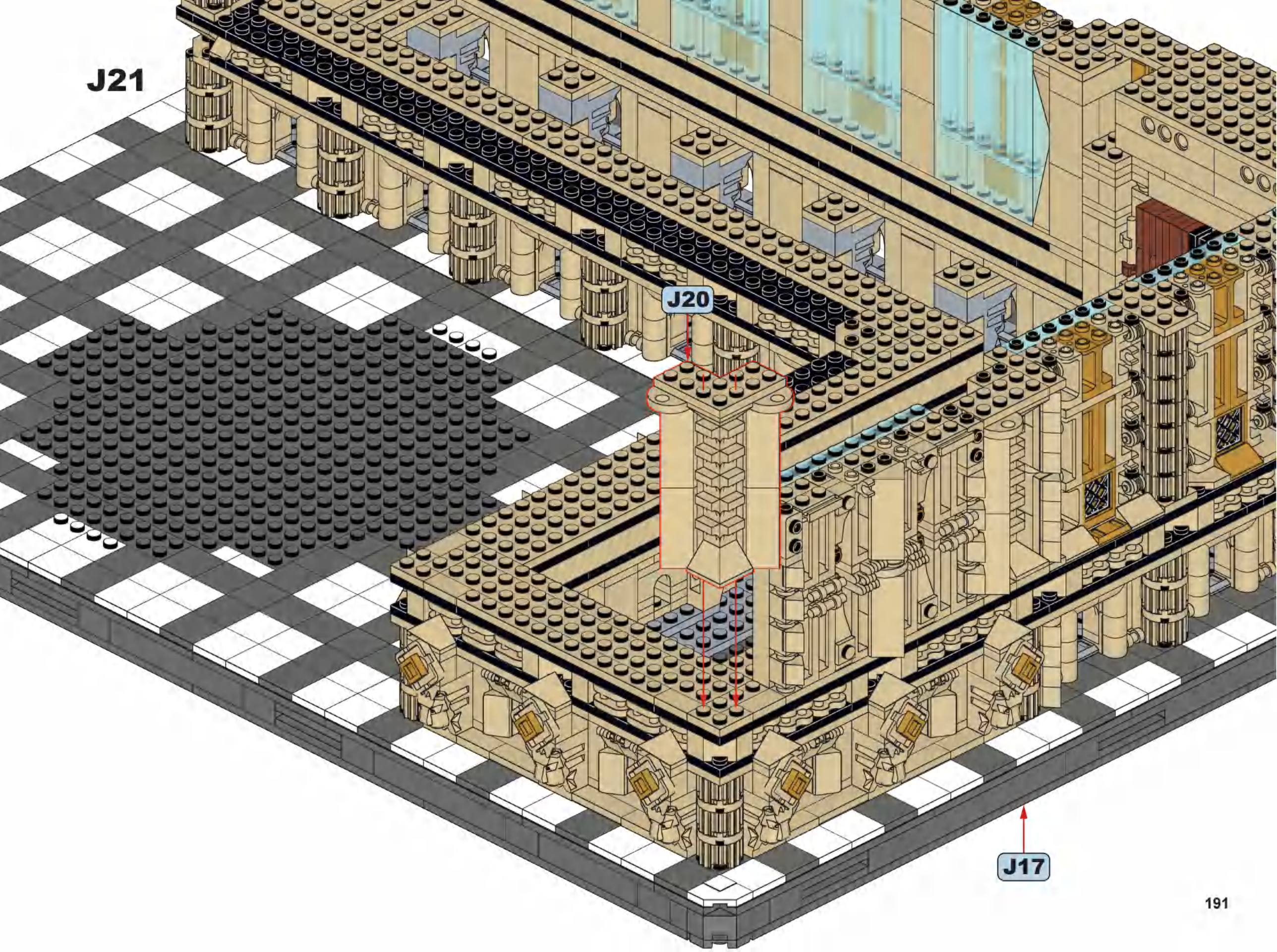
J21
J20
J17

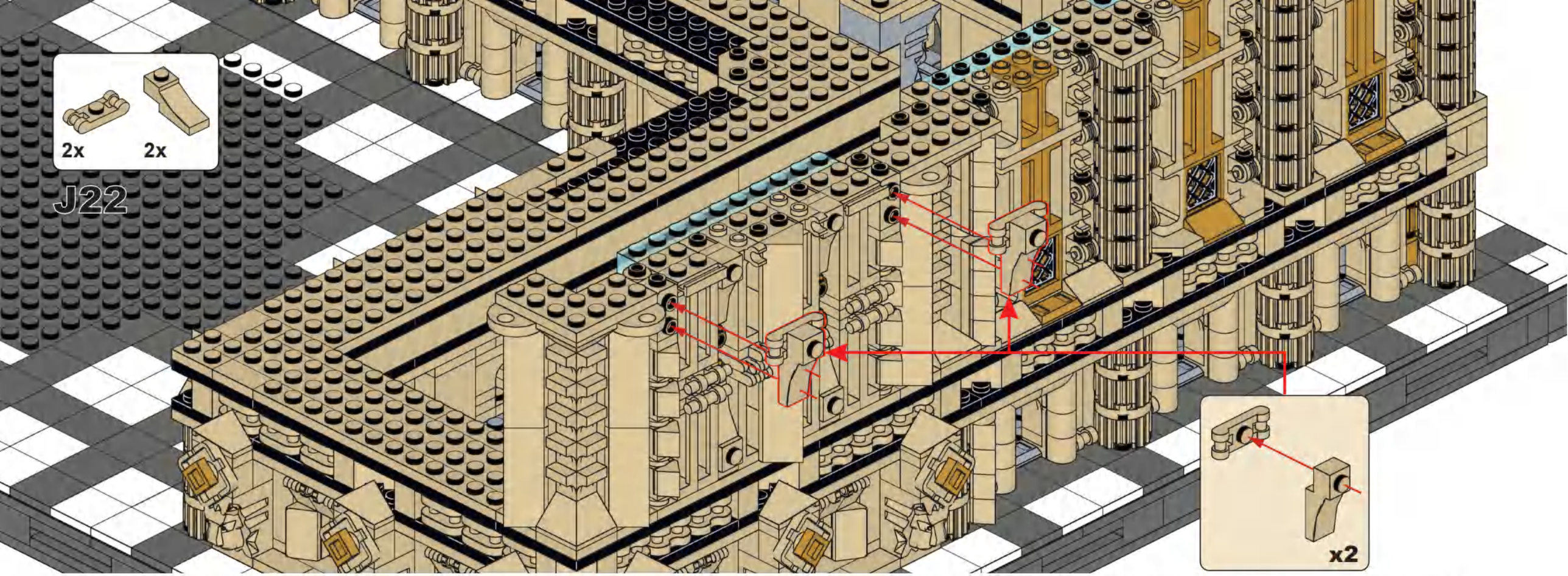

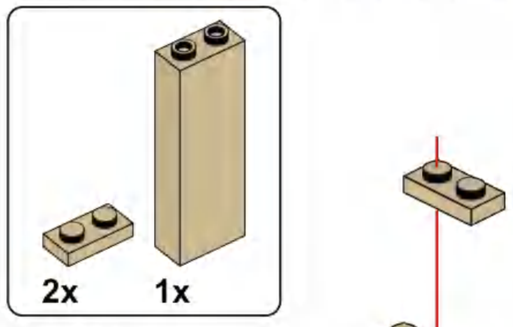

J23

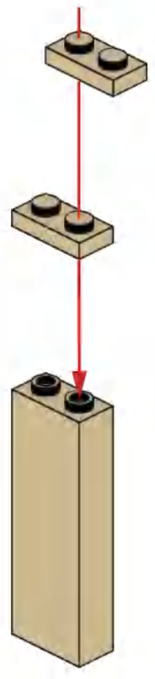

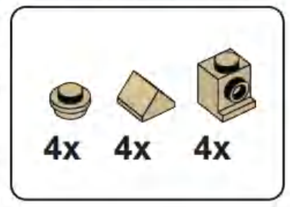

J24

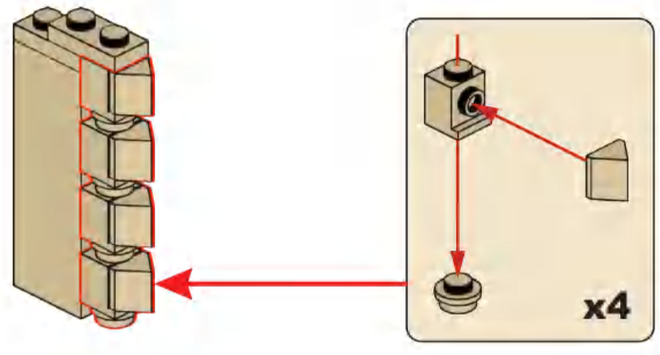

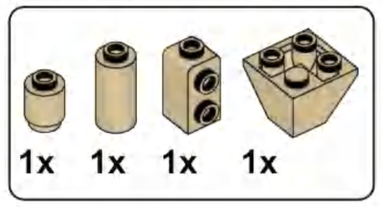

J25

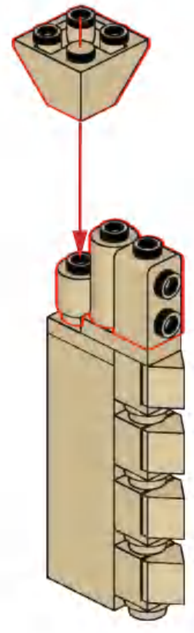

J26

J25

J22

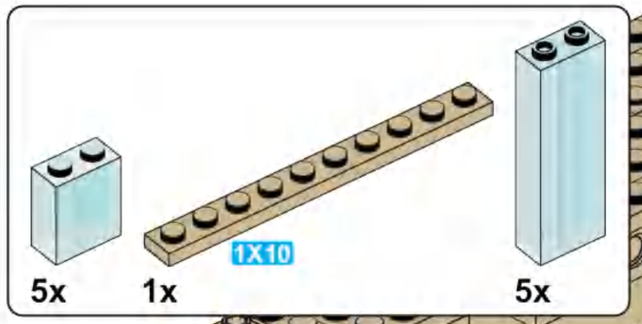

J27

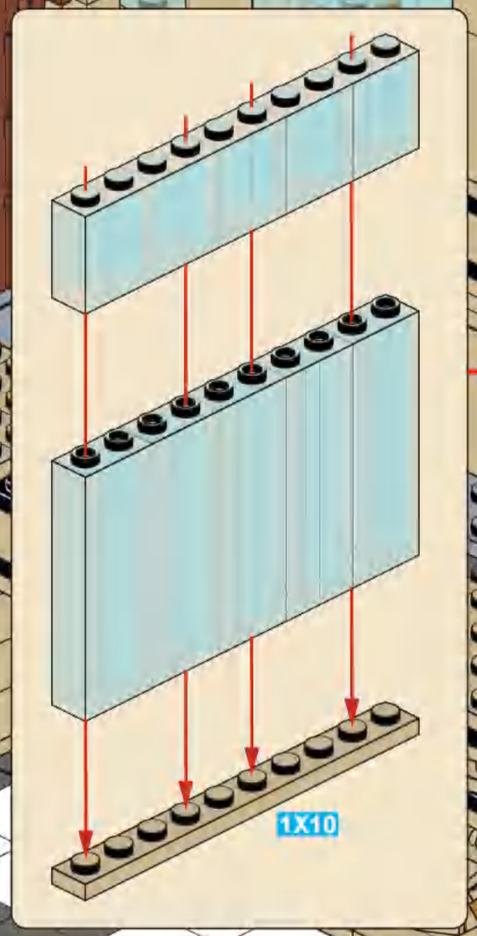

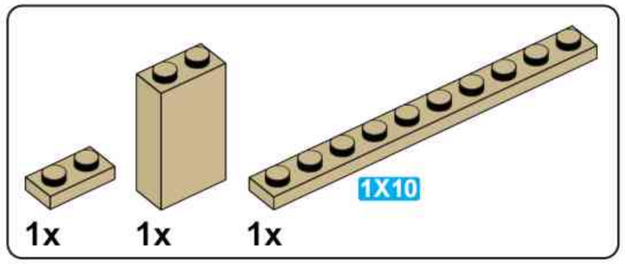

J28

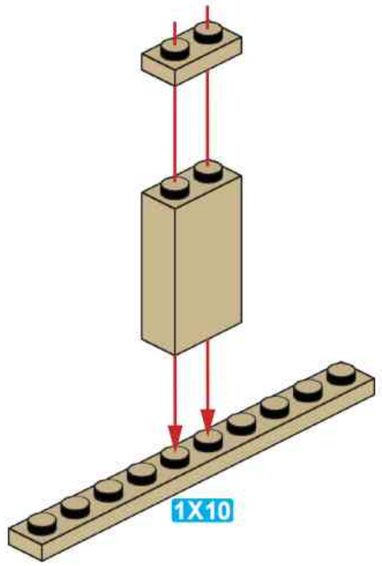

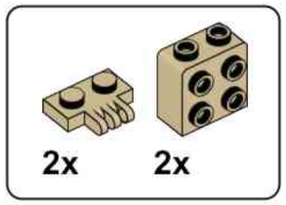

J29

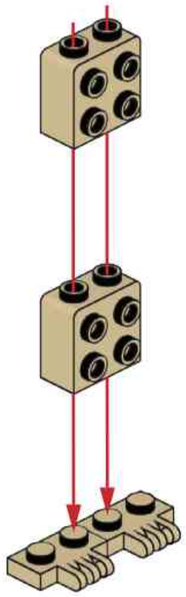

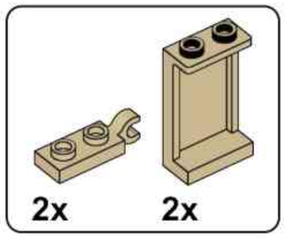

J30

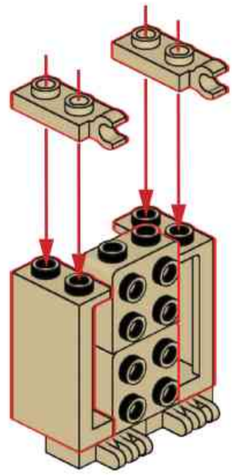

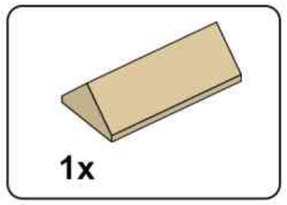

J31

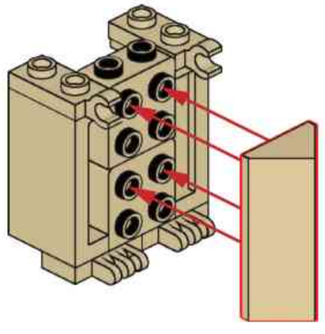

J32

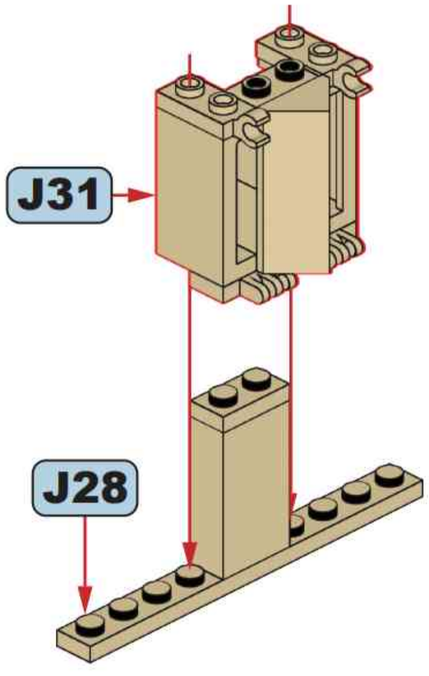

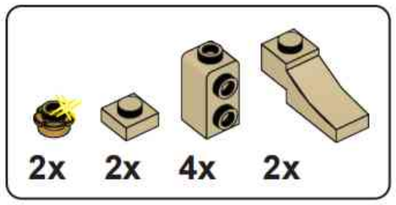

J33

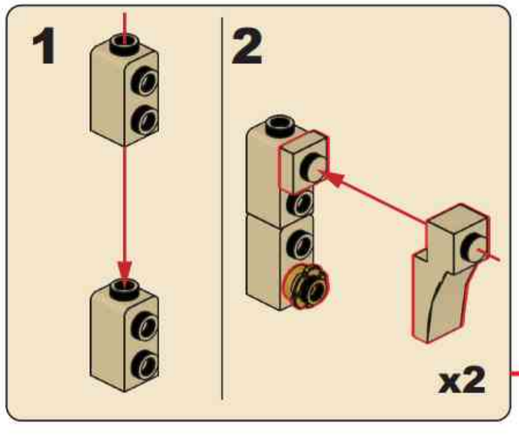

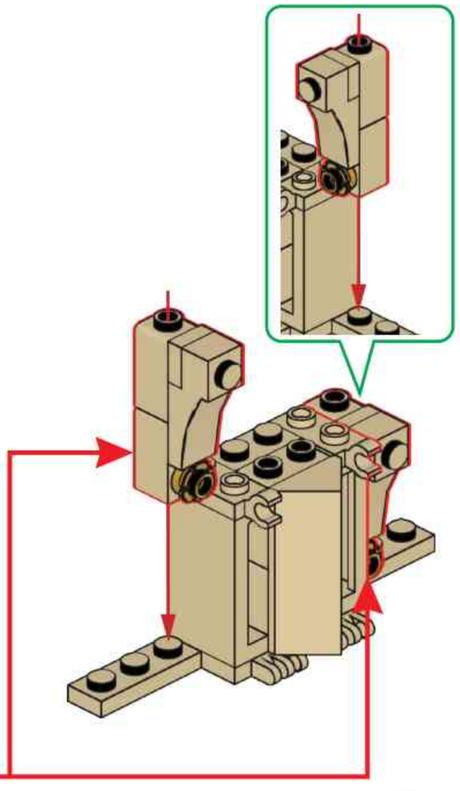

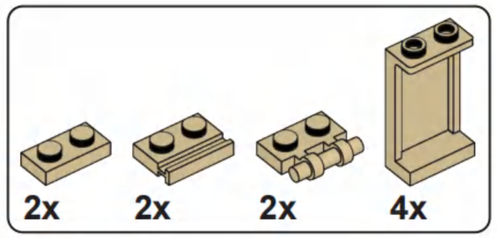

J34

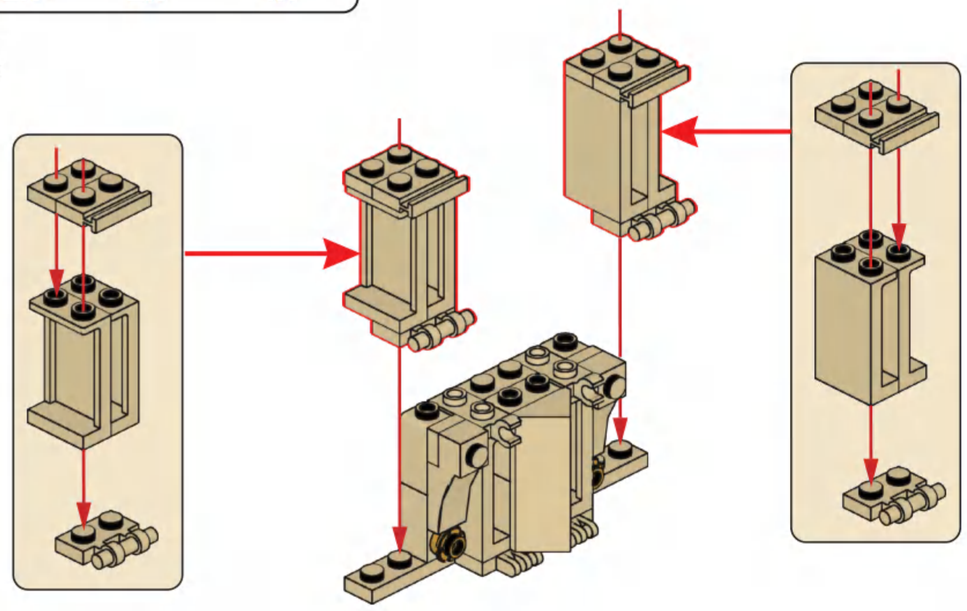

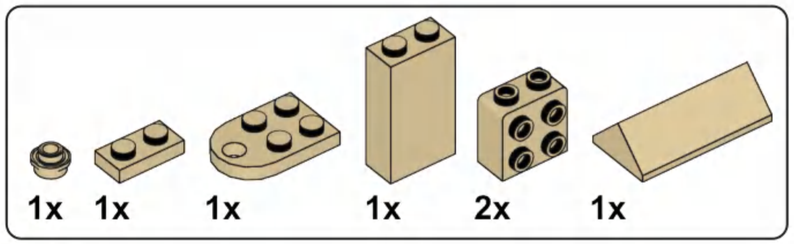

J35

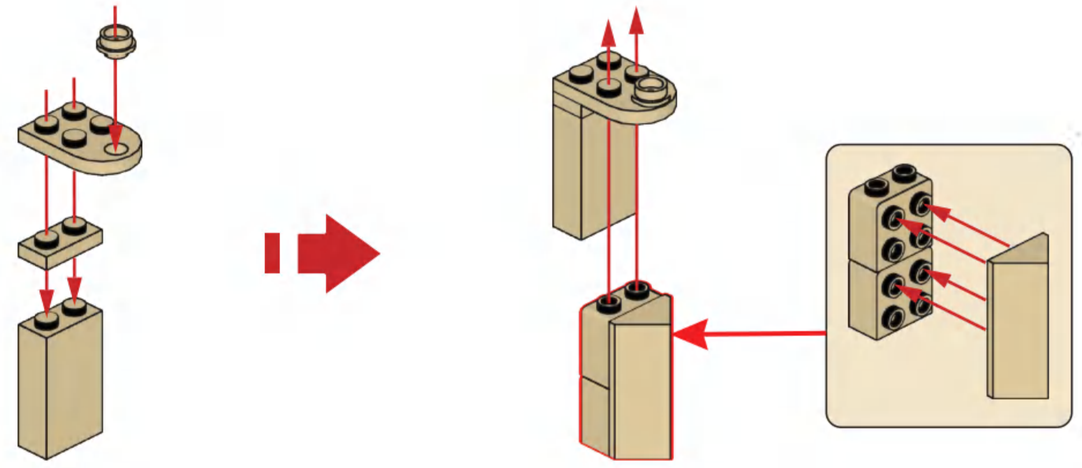

J36

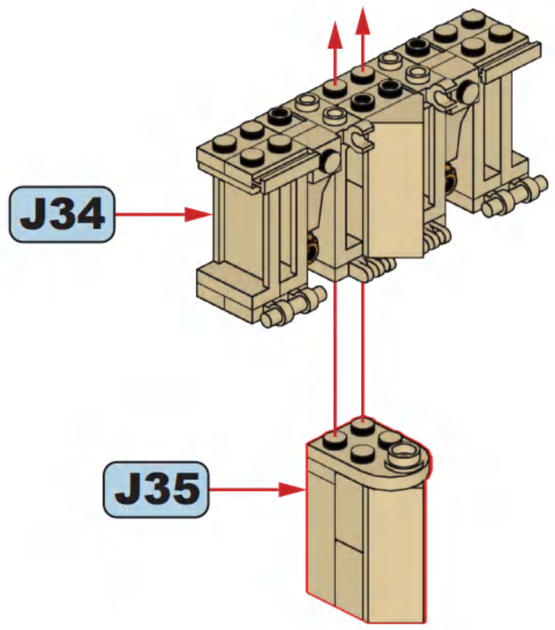

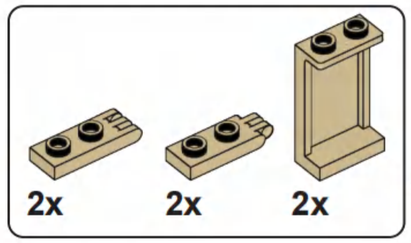

J37

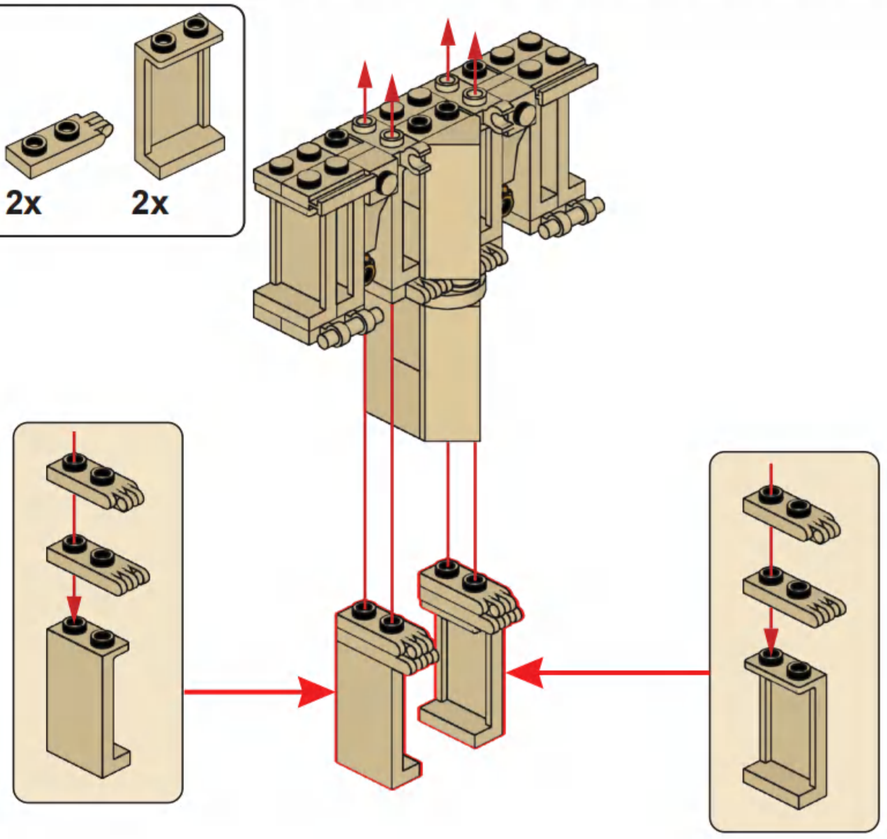

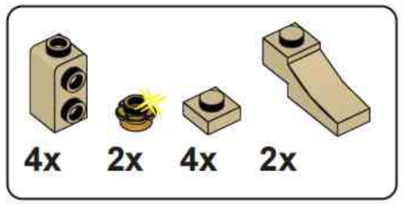

J38

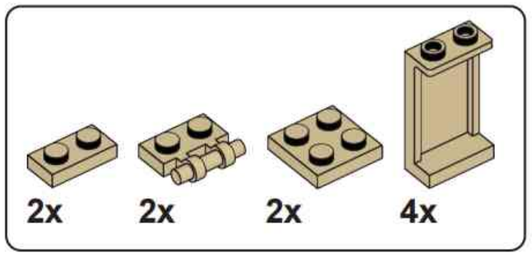

J39

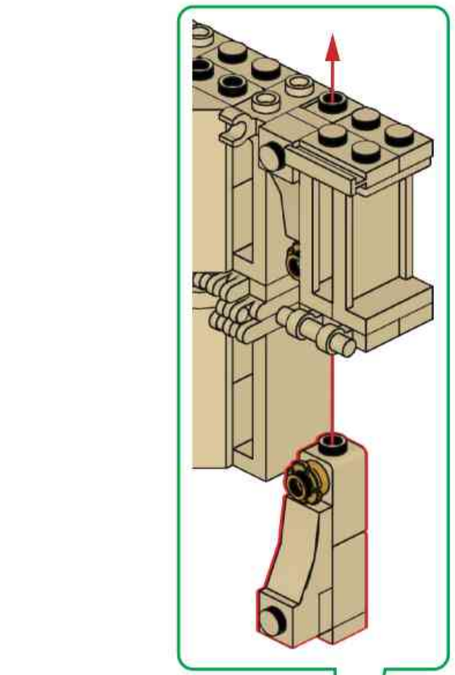

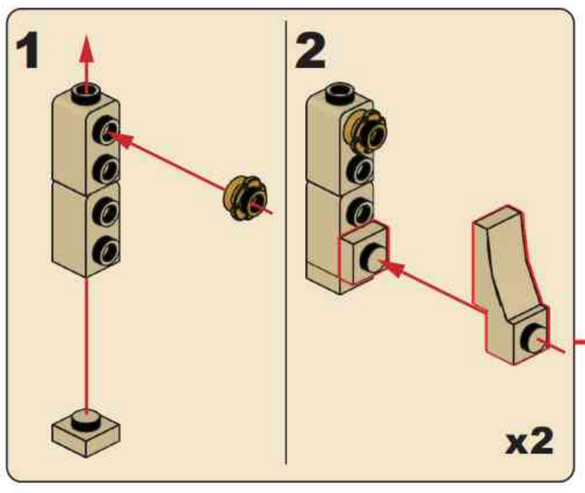

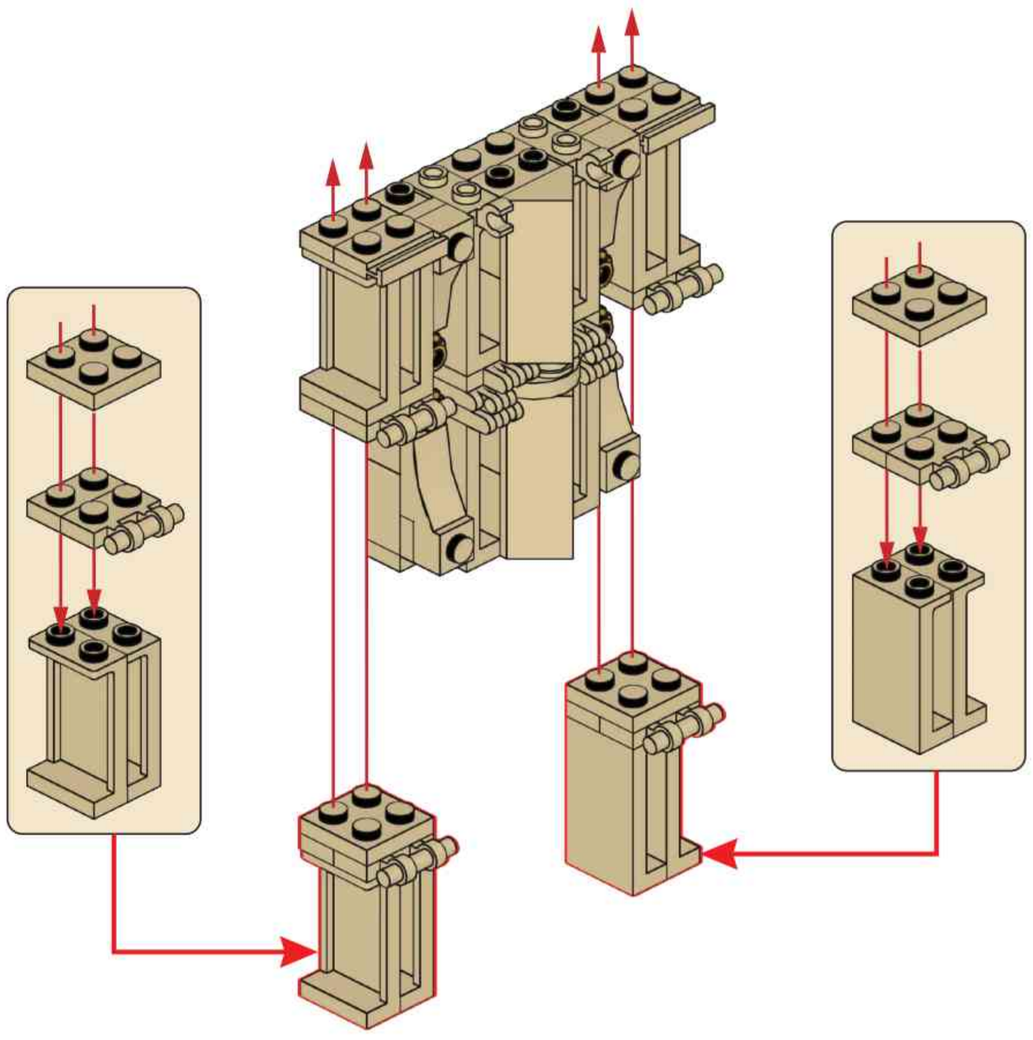

2x

J40

J27

J39

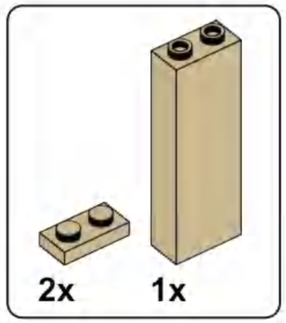

J41

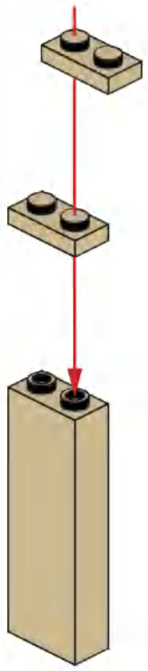

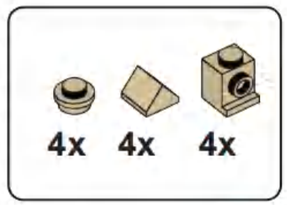

J42

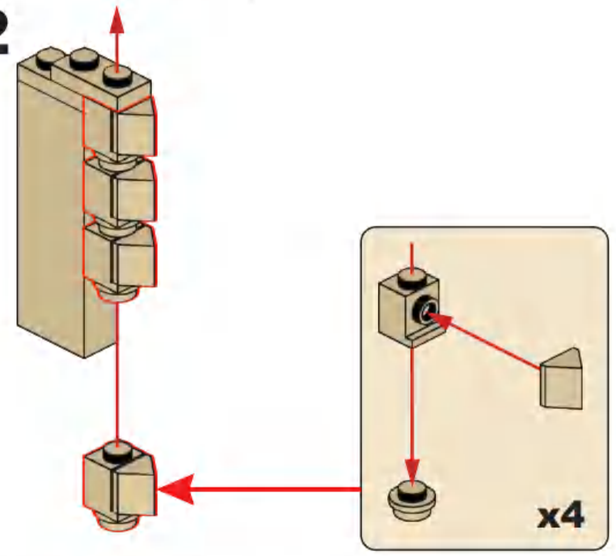

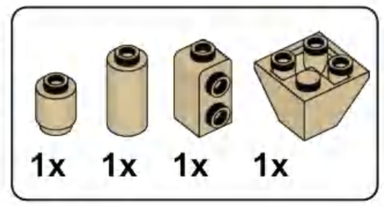

J43

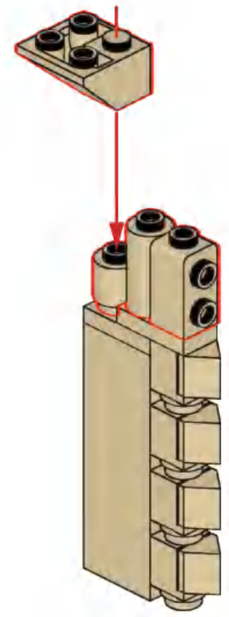

J44

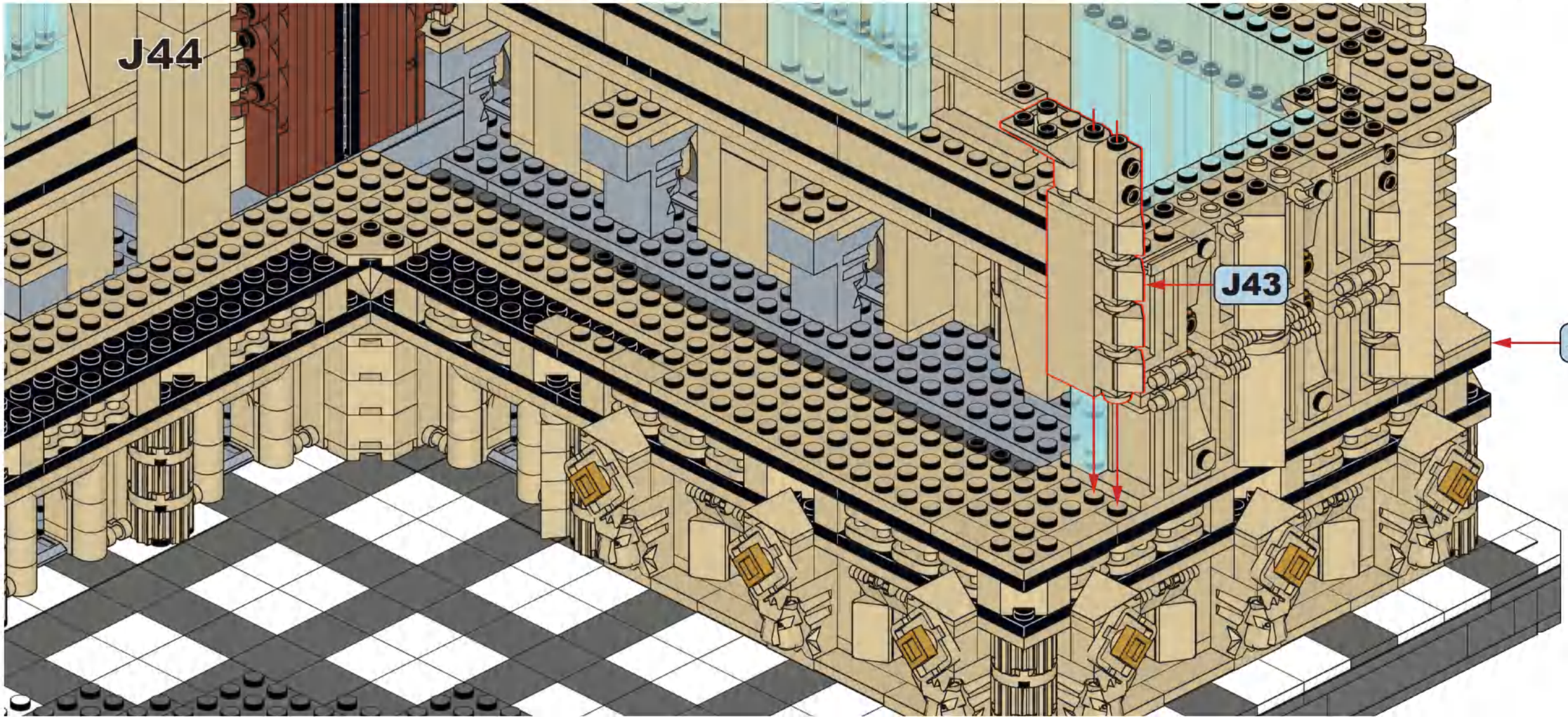

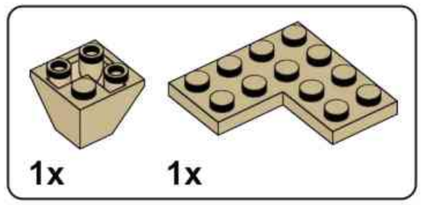

J45

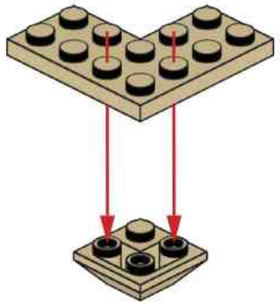

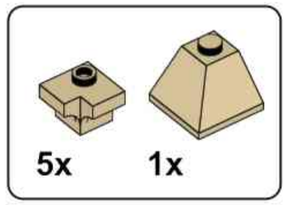

J46

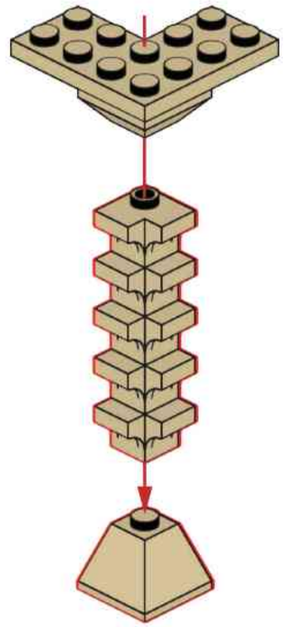

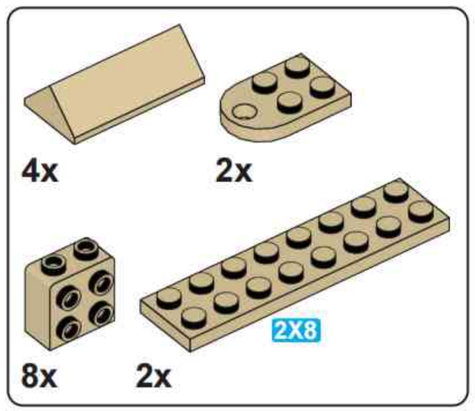

J47

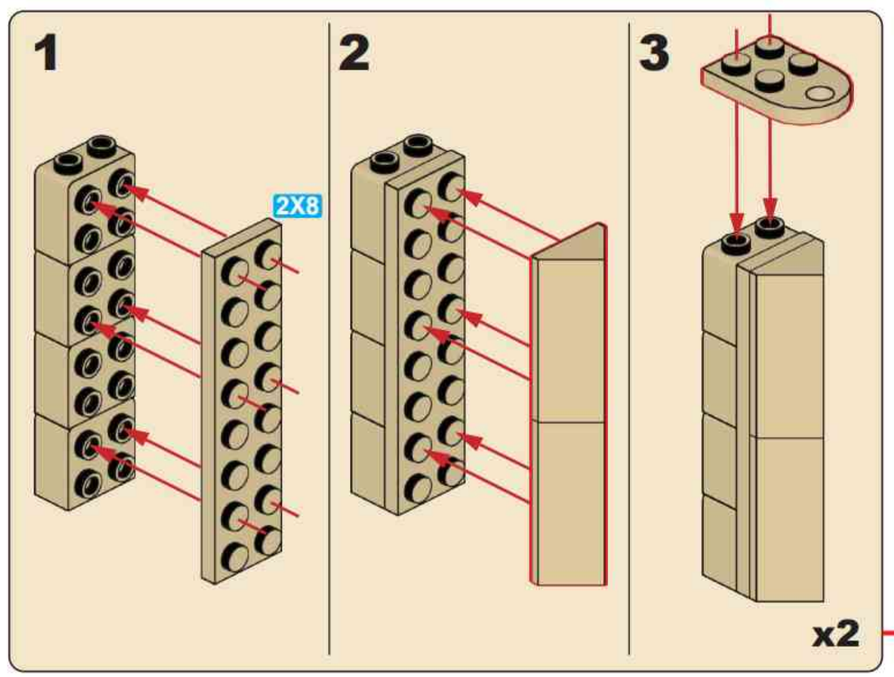

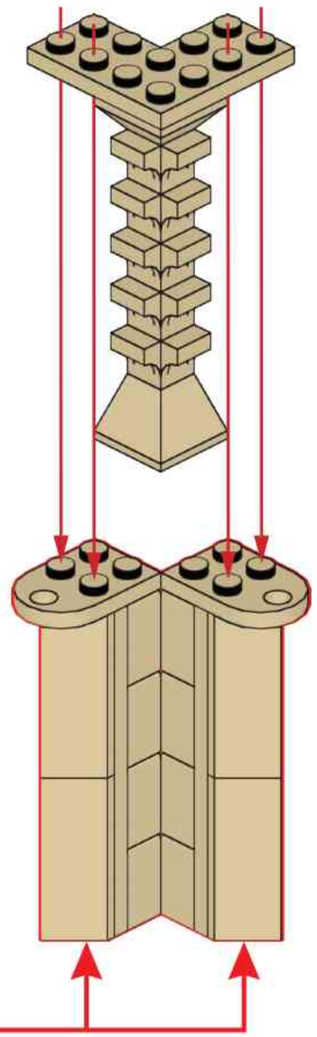

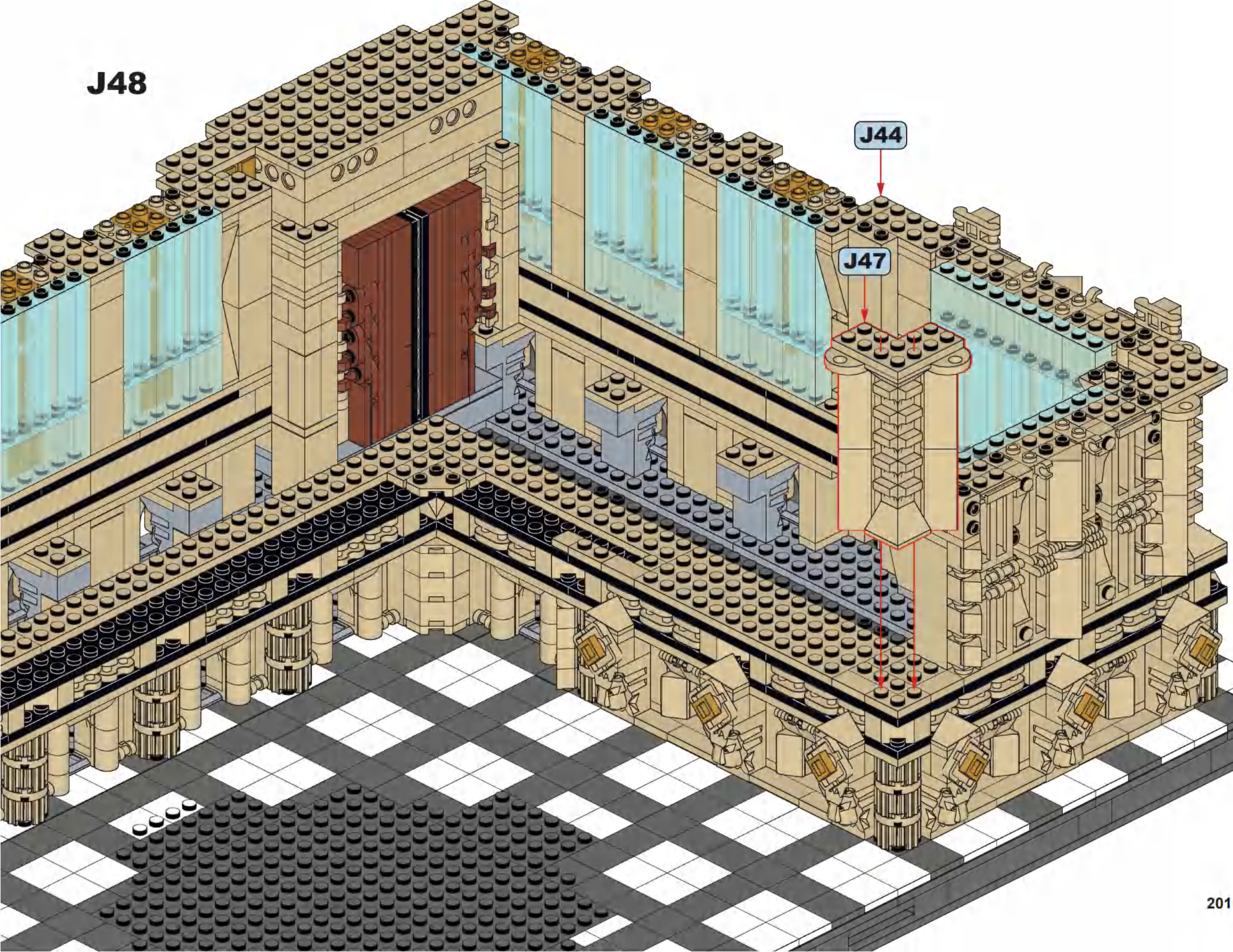
J48
J44
J47

J49

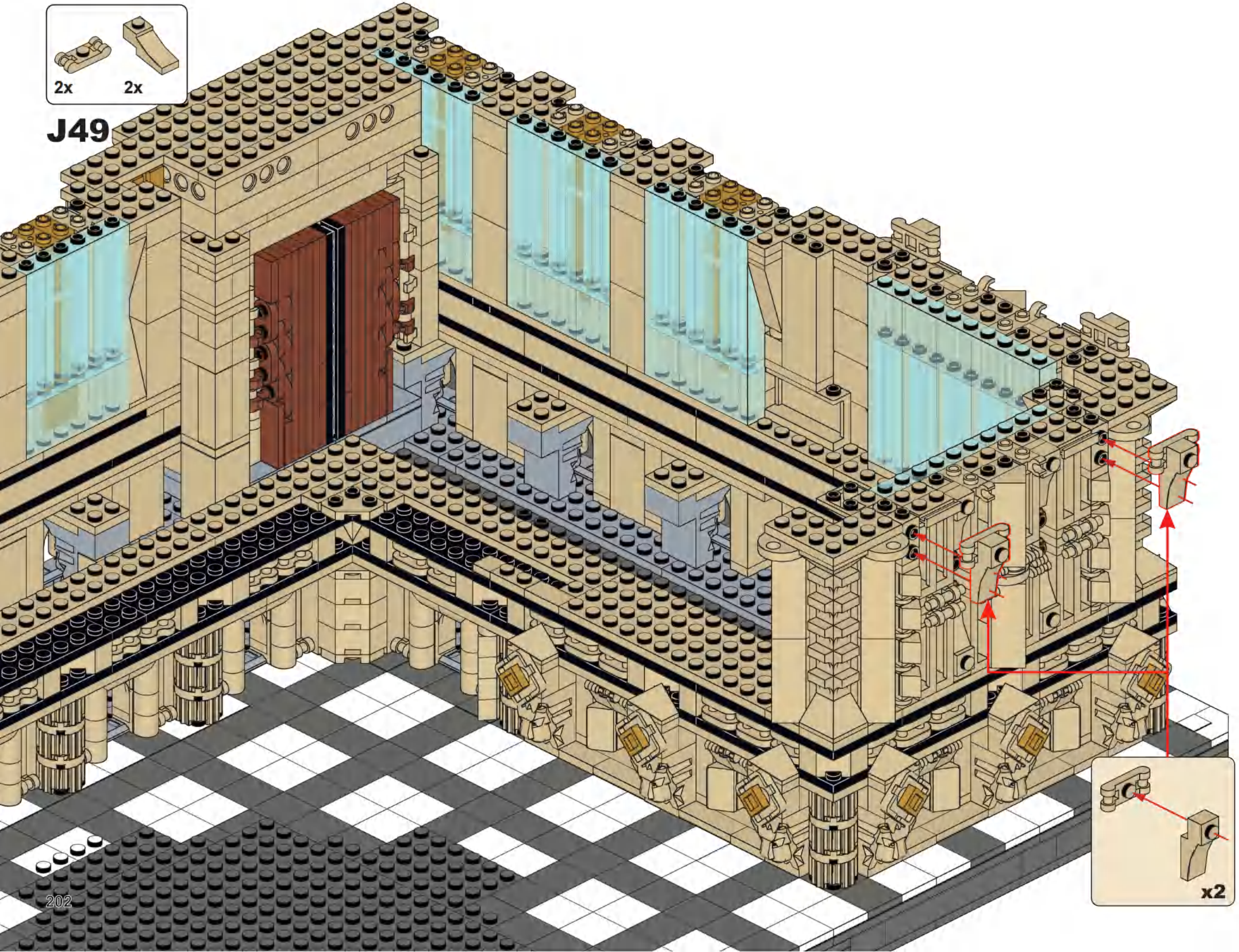

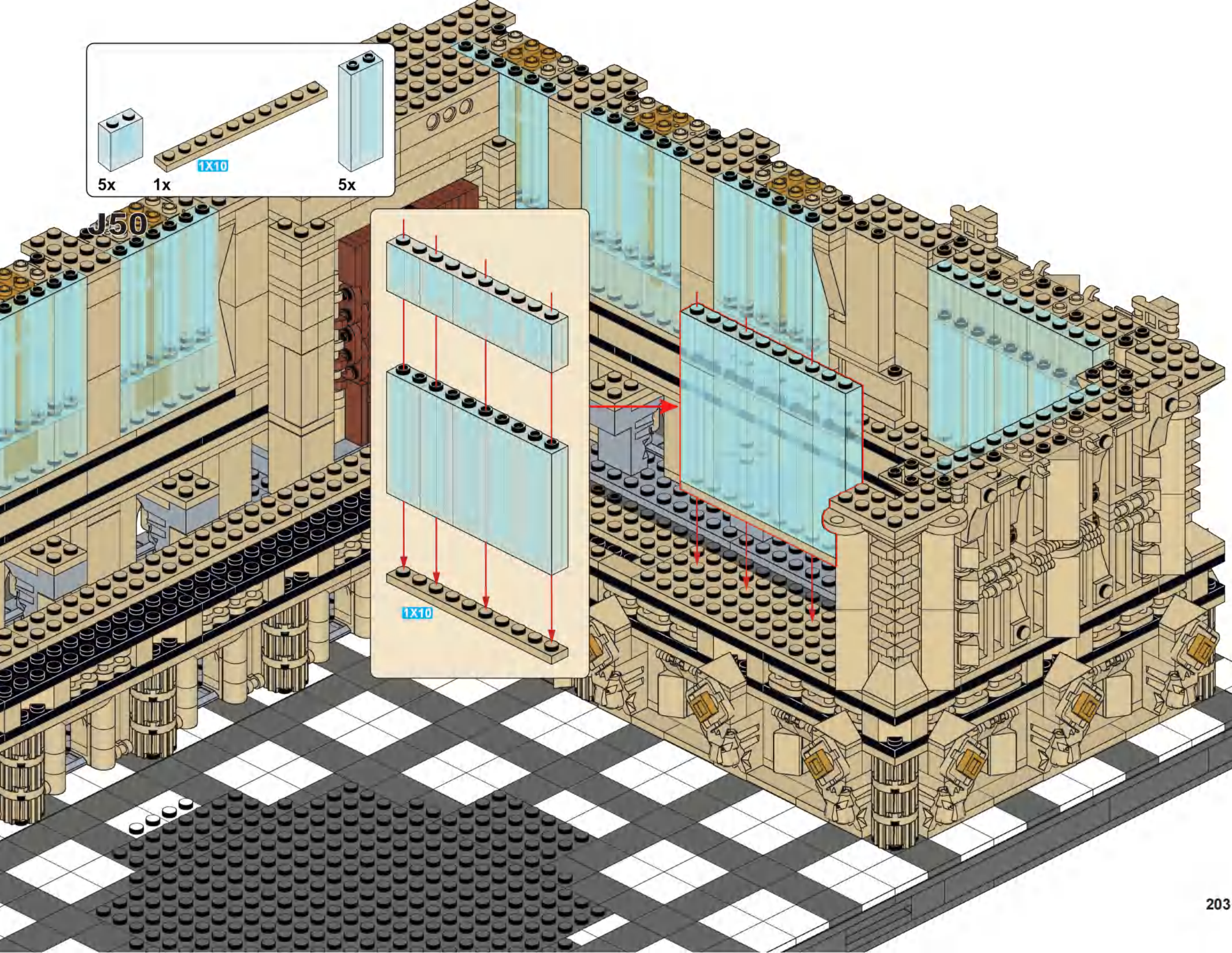
5x
1x
1X10
5x
J50
1X10

11

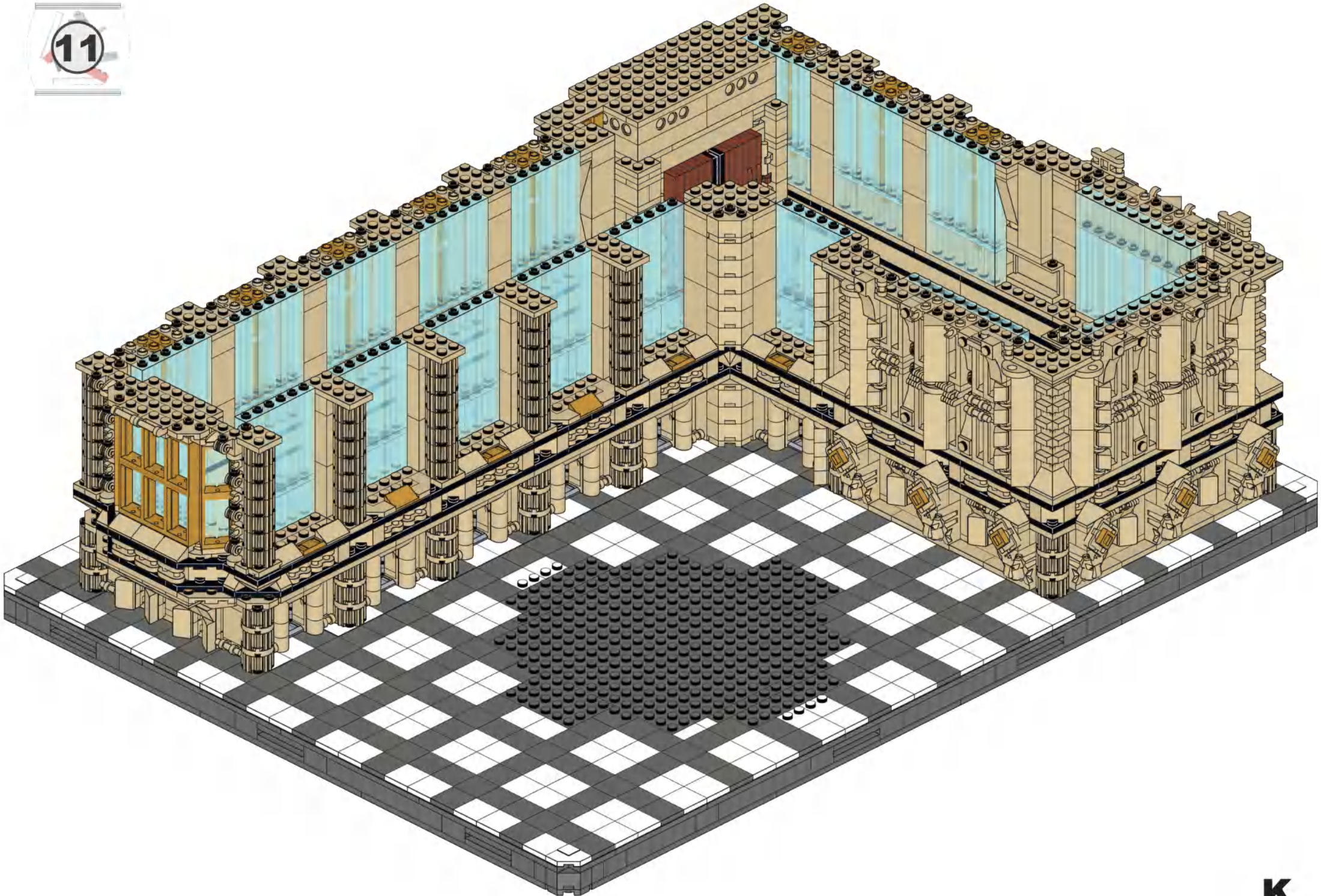

K

K1

2x 2x 2x

x2

K2

2x 2x

x2

K3

8x 8x 8x

x4

x2

K4

J50

K3

K3

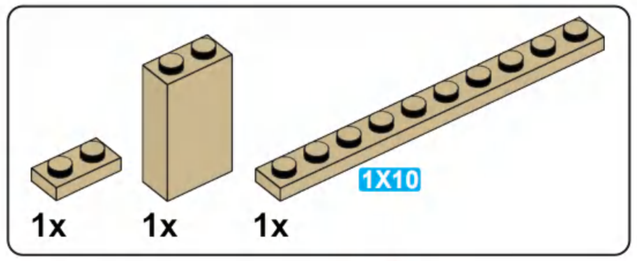

K5

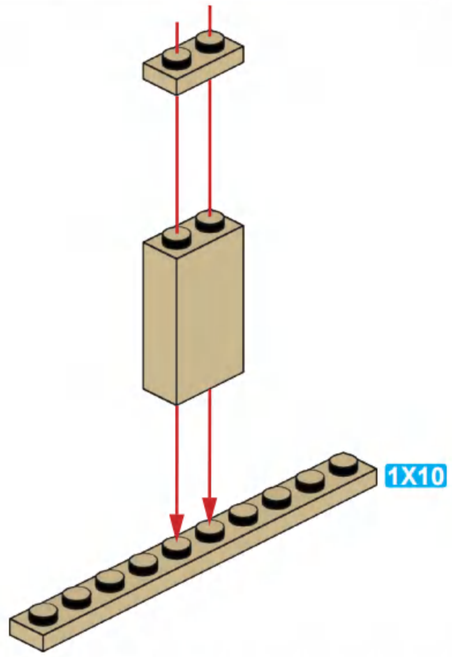

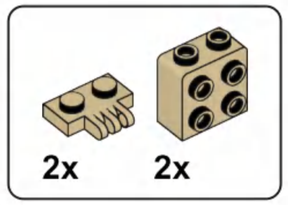

K6

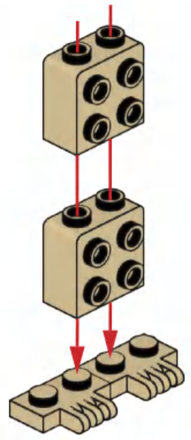

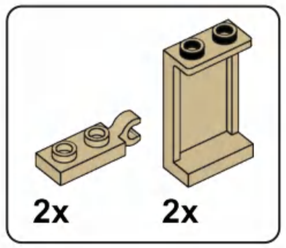

K7

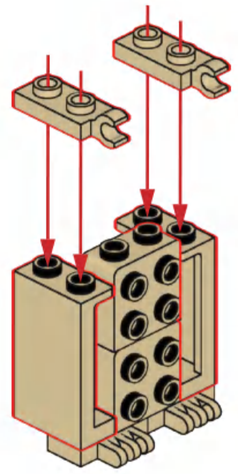

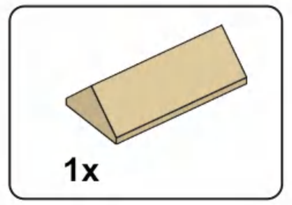

K8

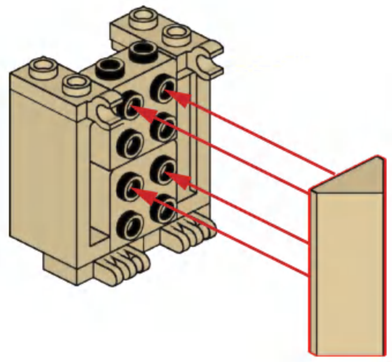

K9

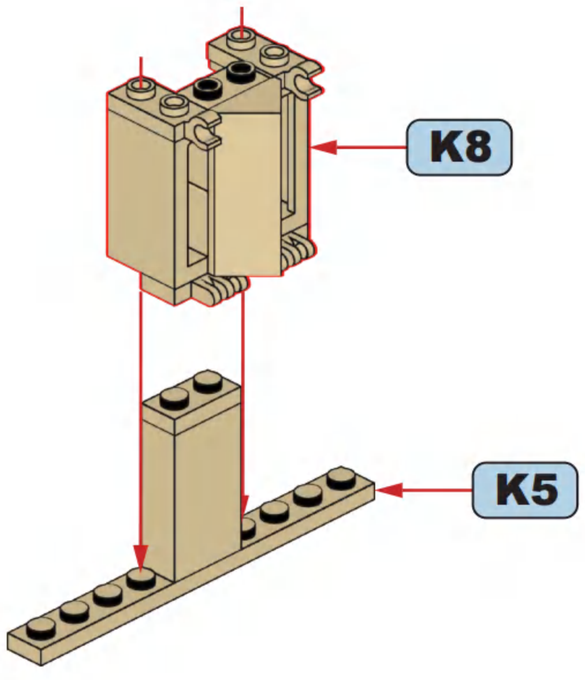

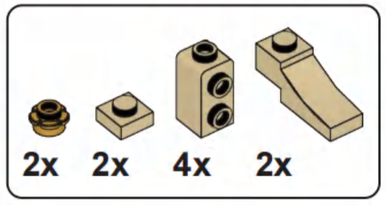

K10

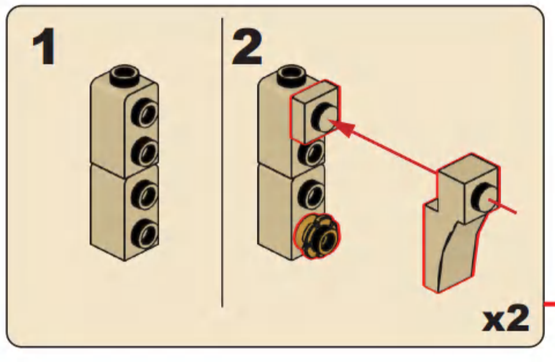

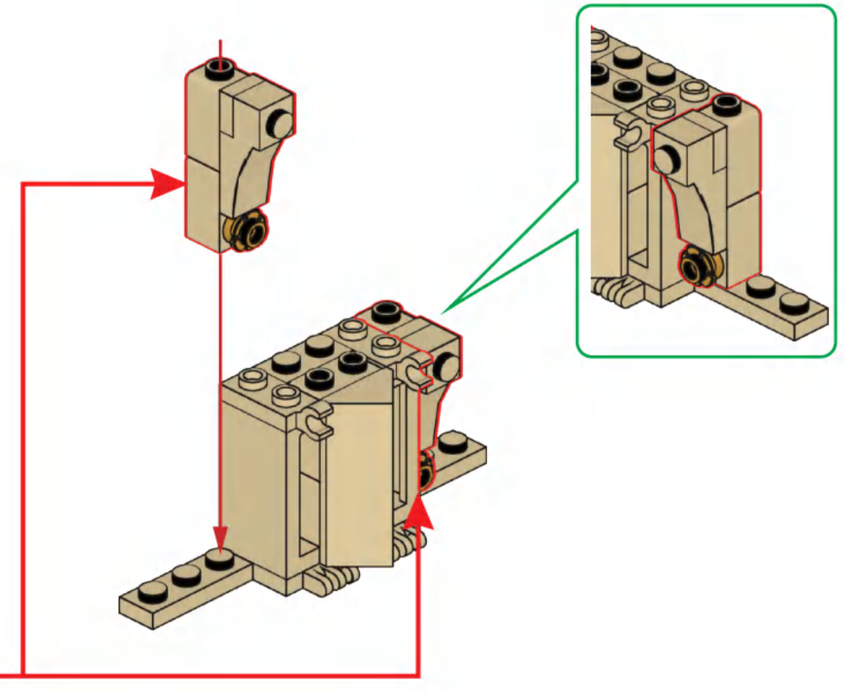

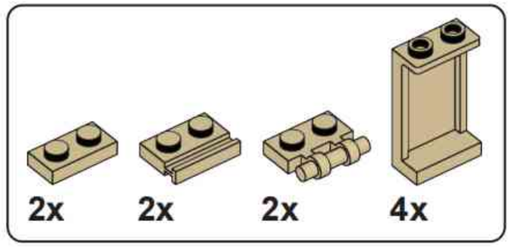

K11

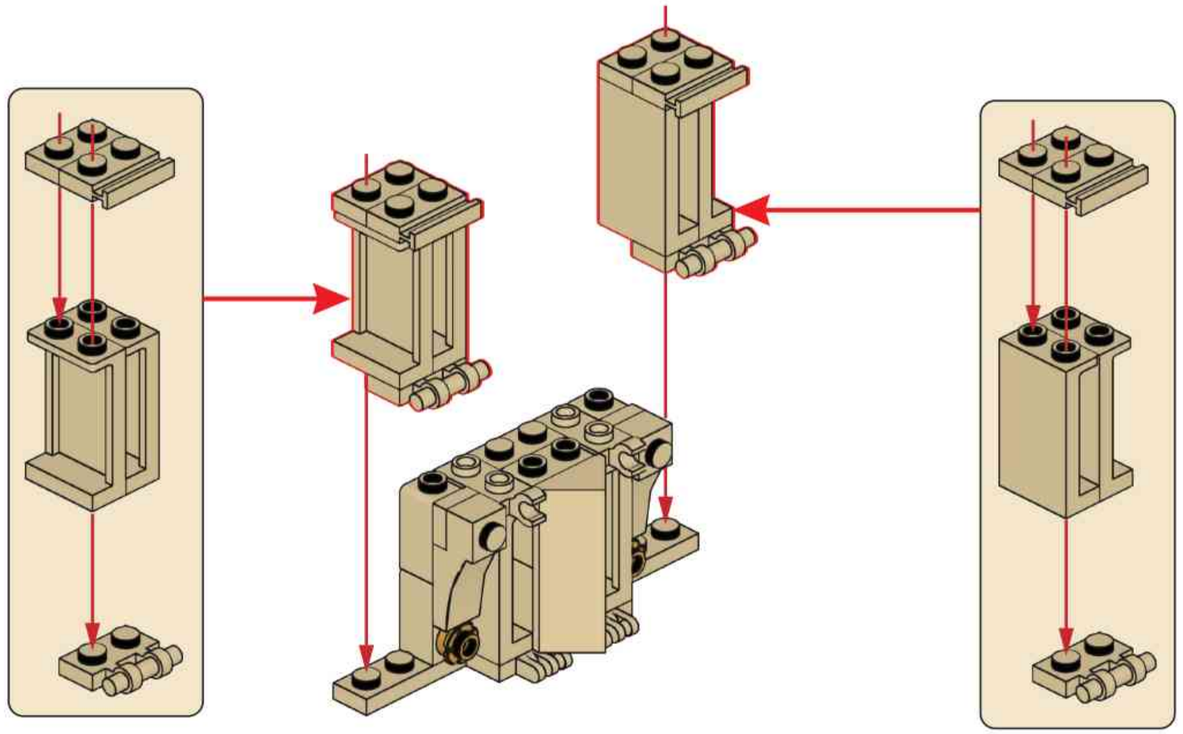

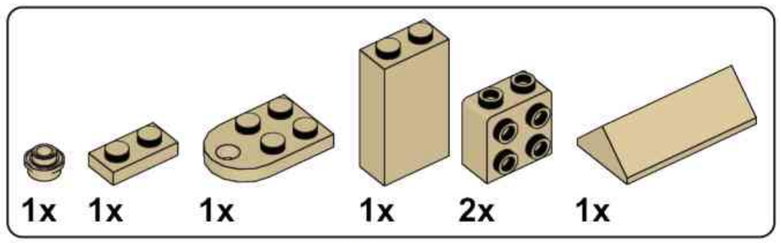

K12

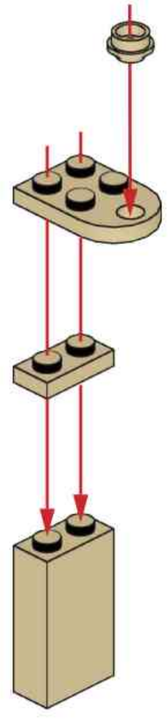

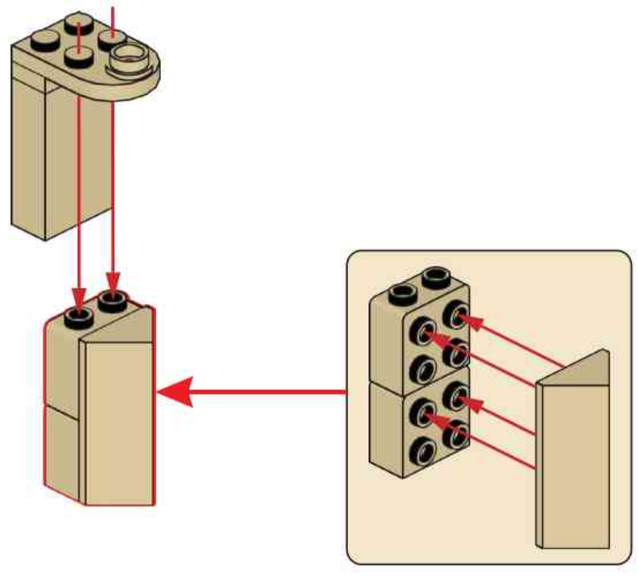

K13

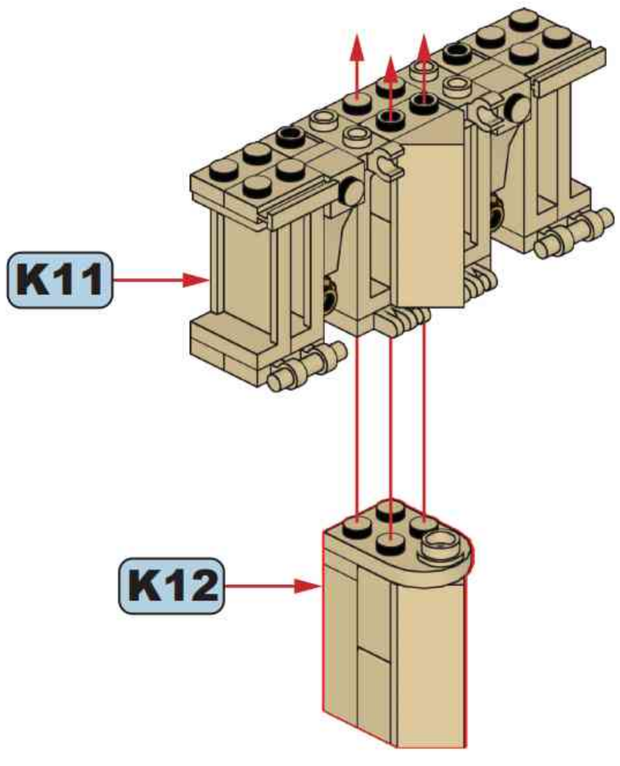

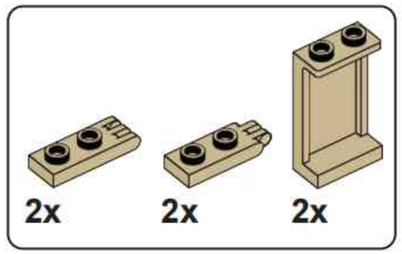

K14

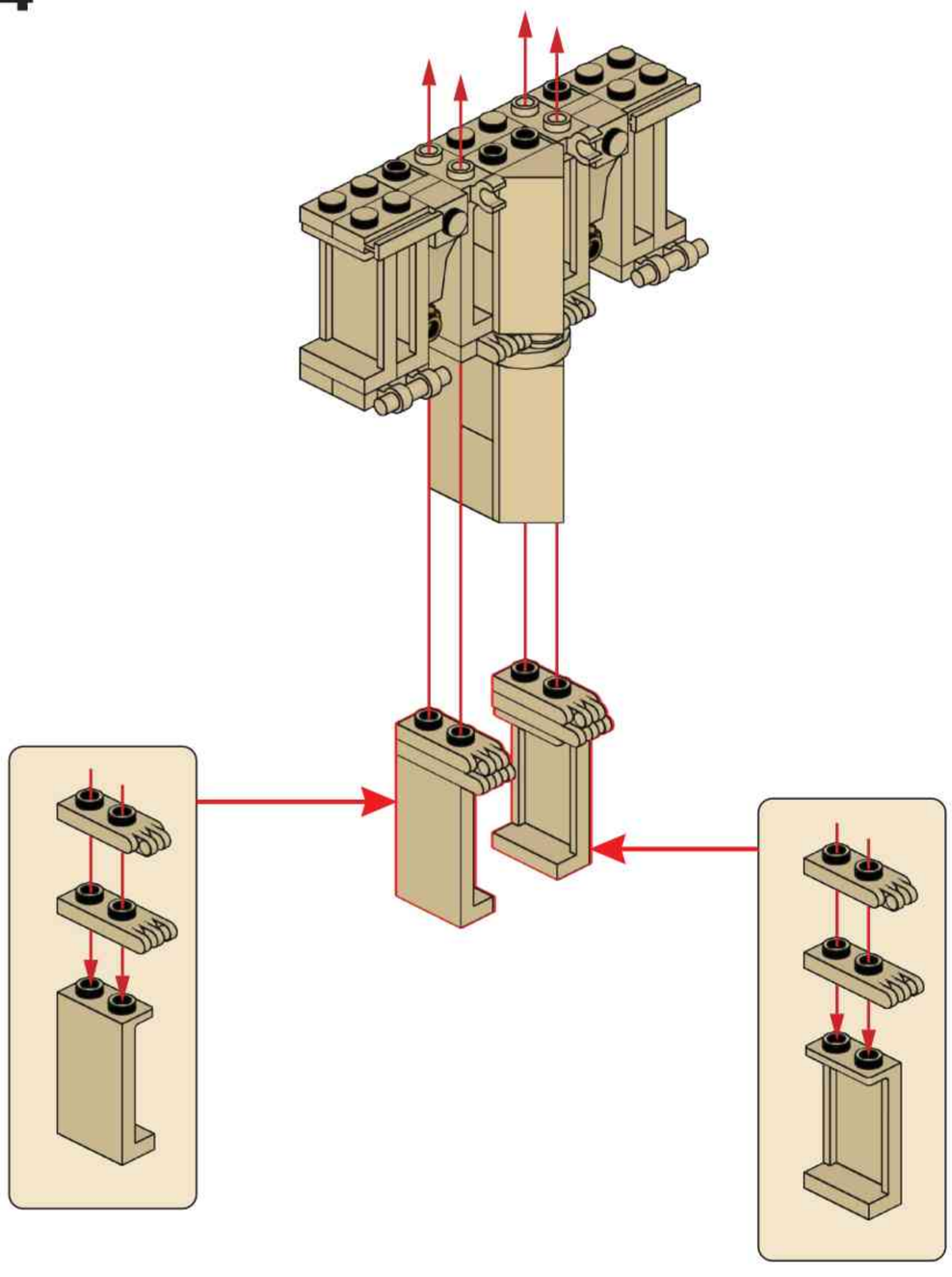

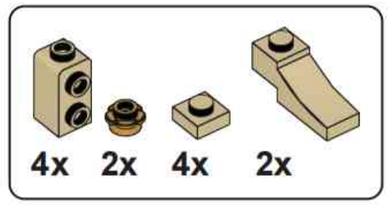

K15

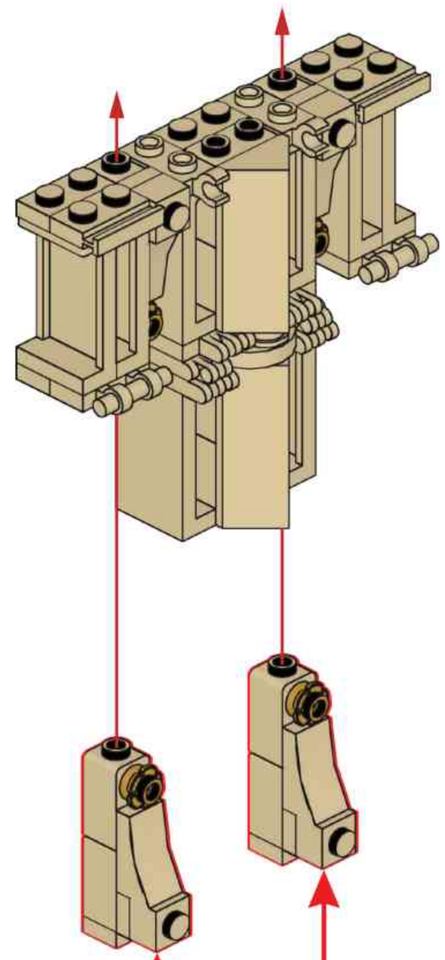

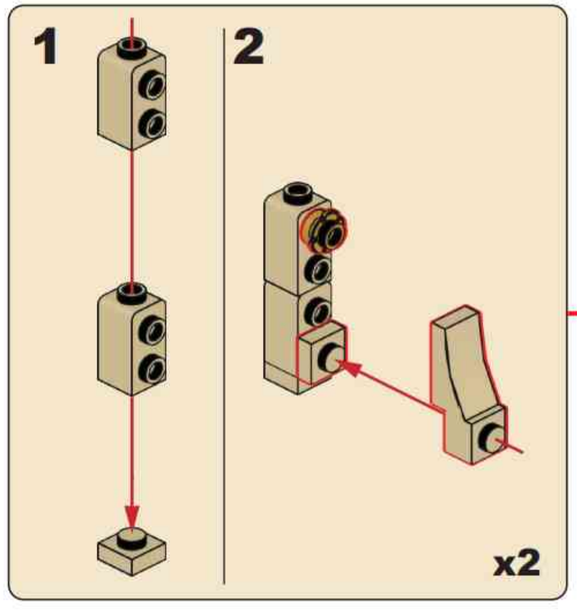

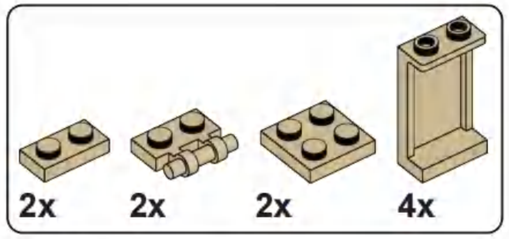

K16

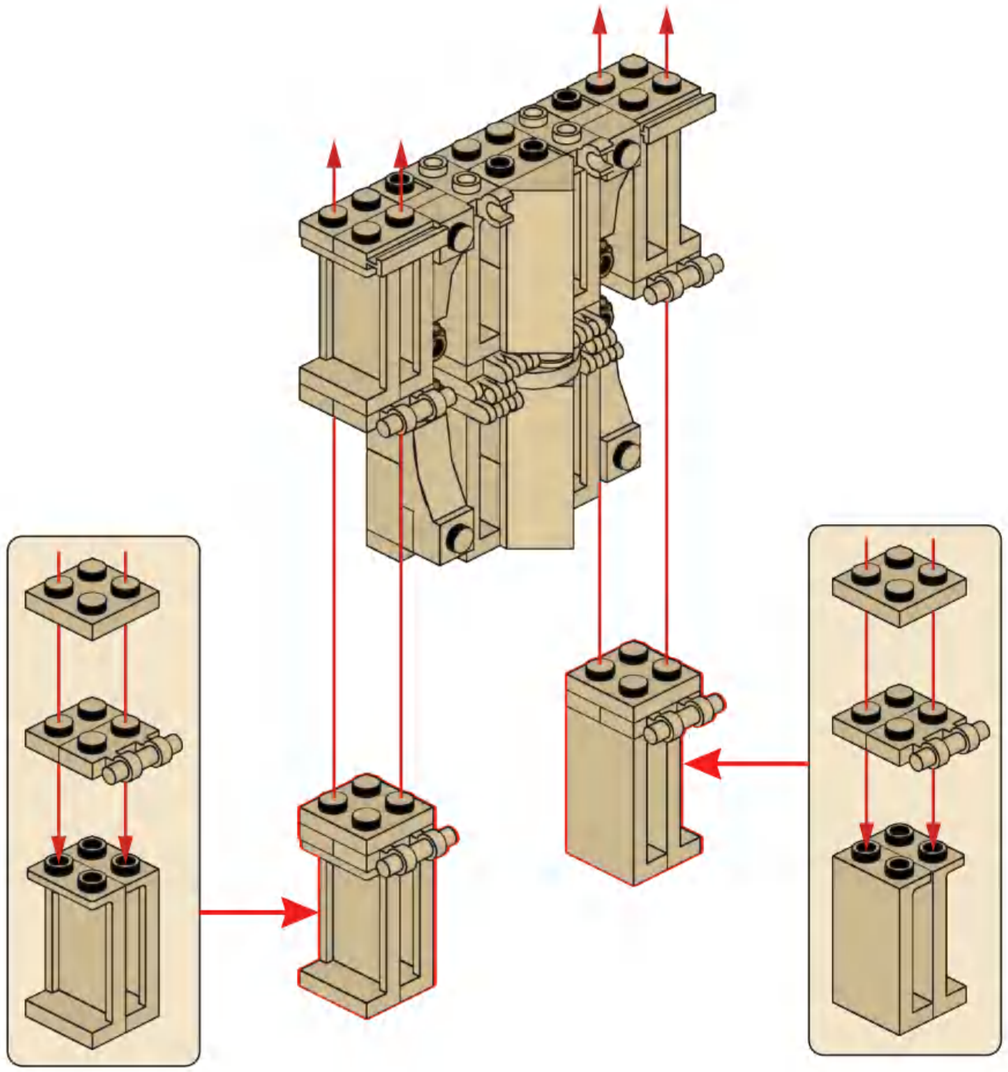

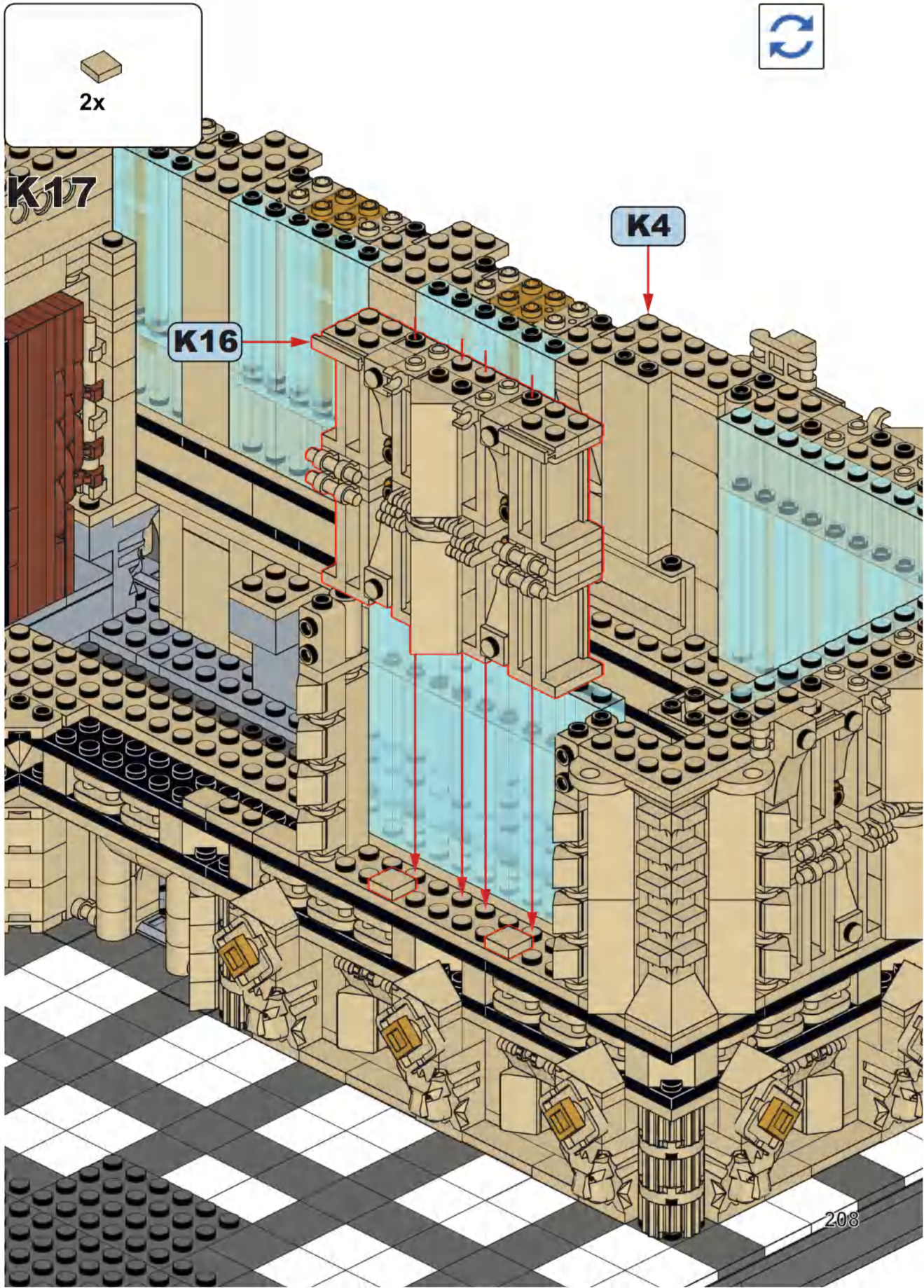

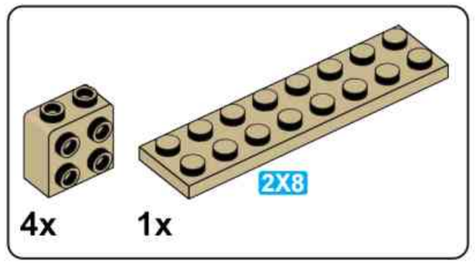

K18

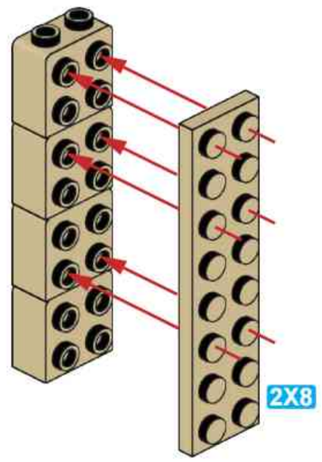

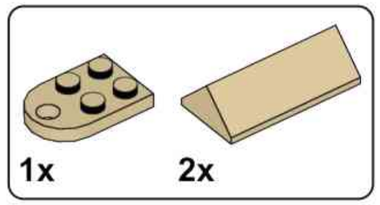

K19

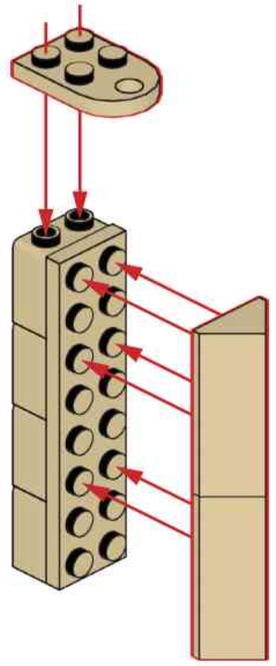

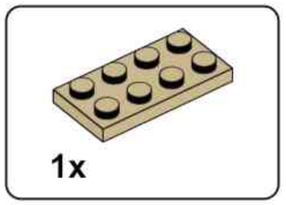

K20

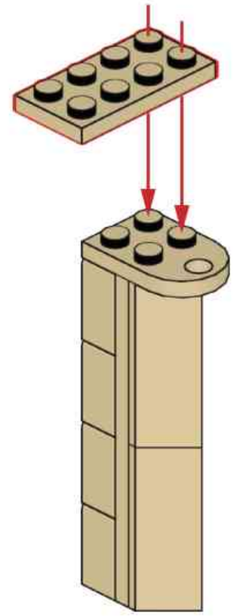

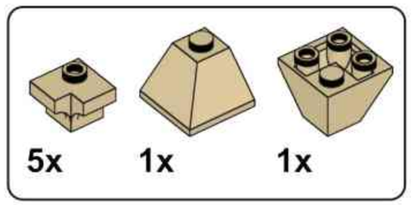

K21

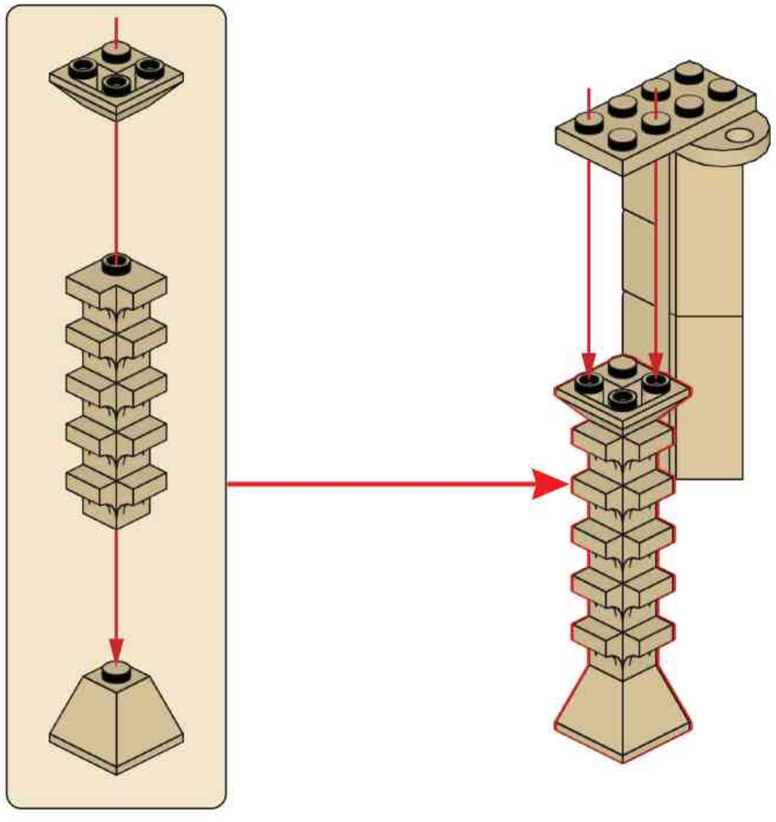

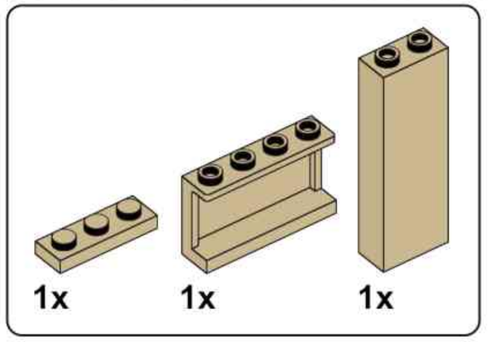

K22

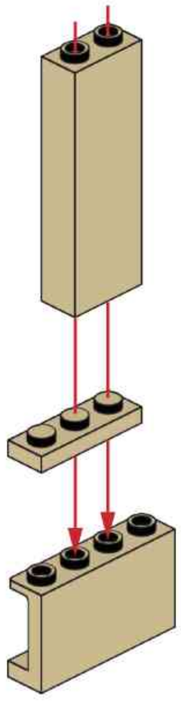

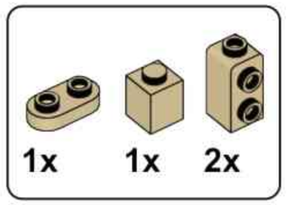

K23

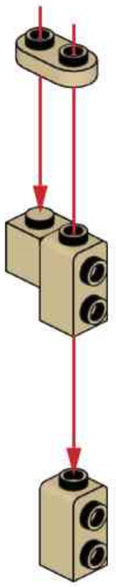

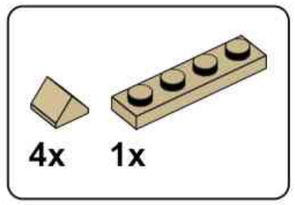

K24

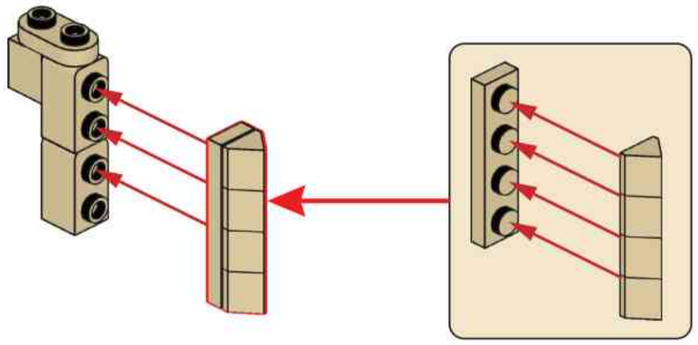

K25

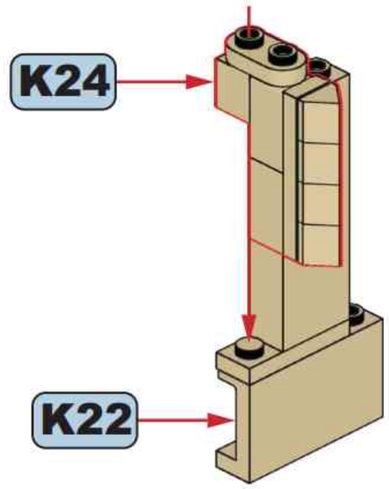

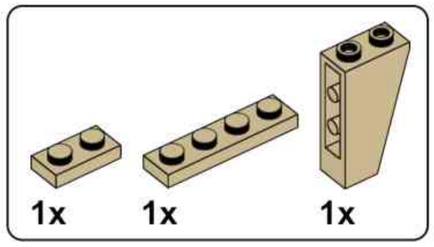

K26

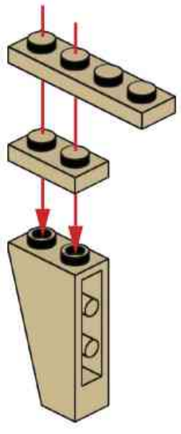

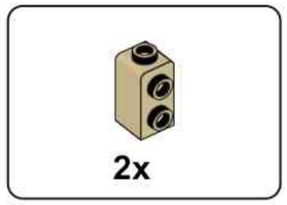

K27

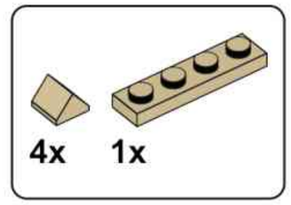

K28

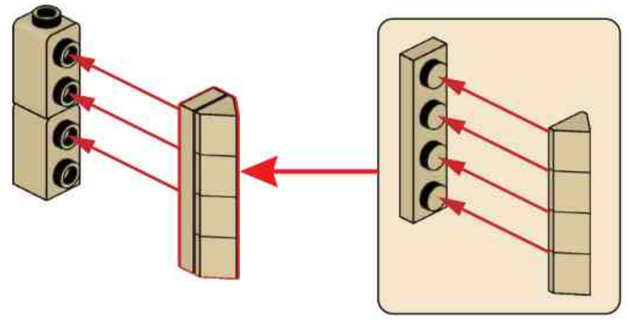

K29

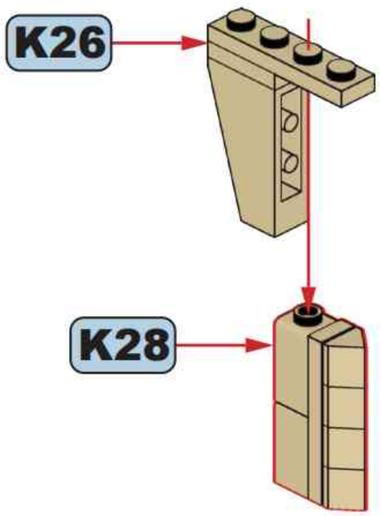

K30

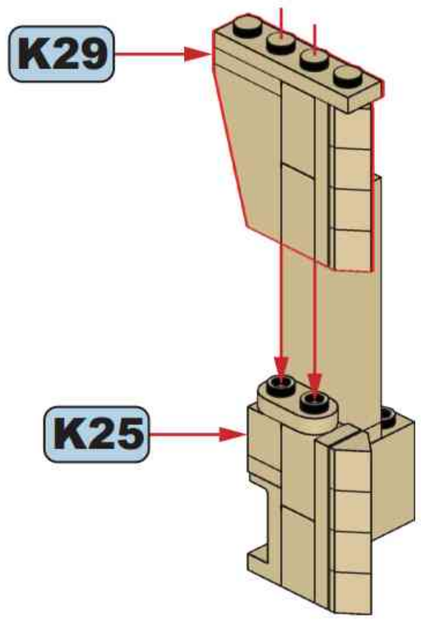

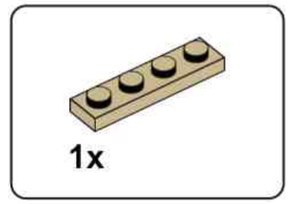

K31

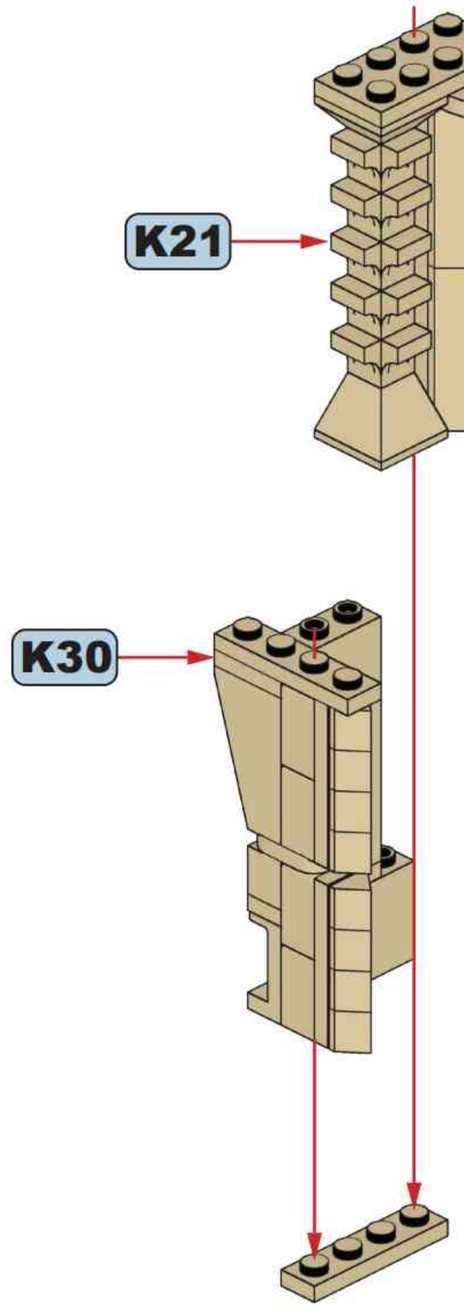

K32

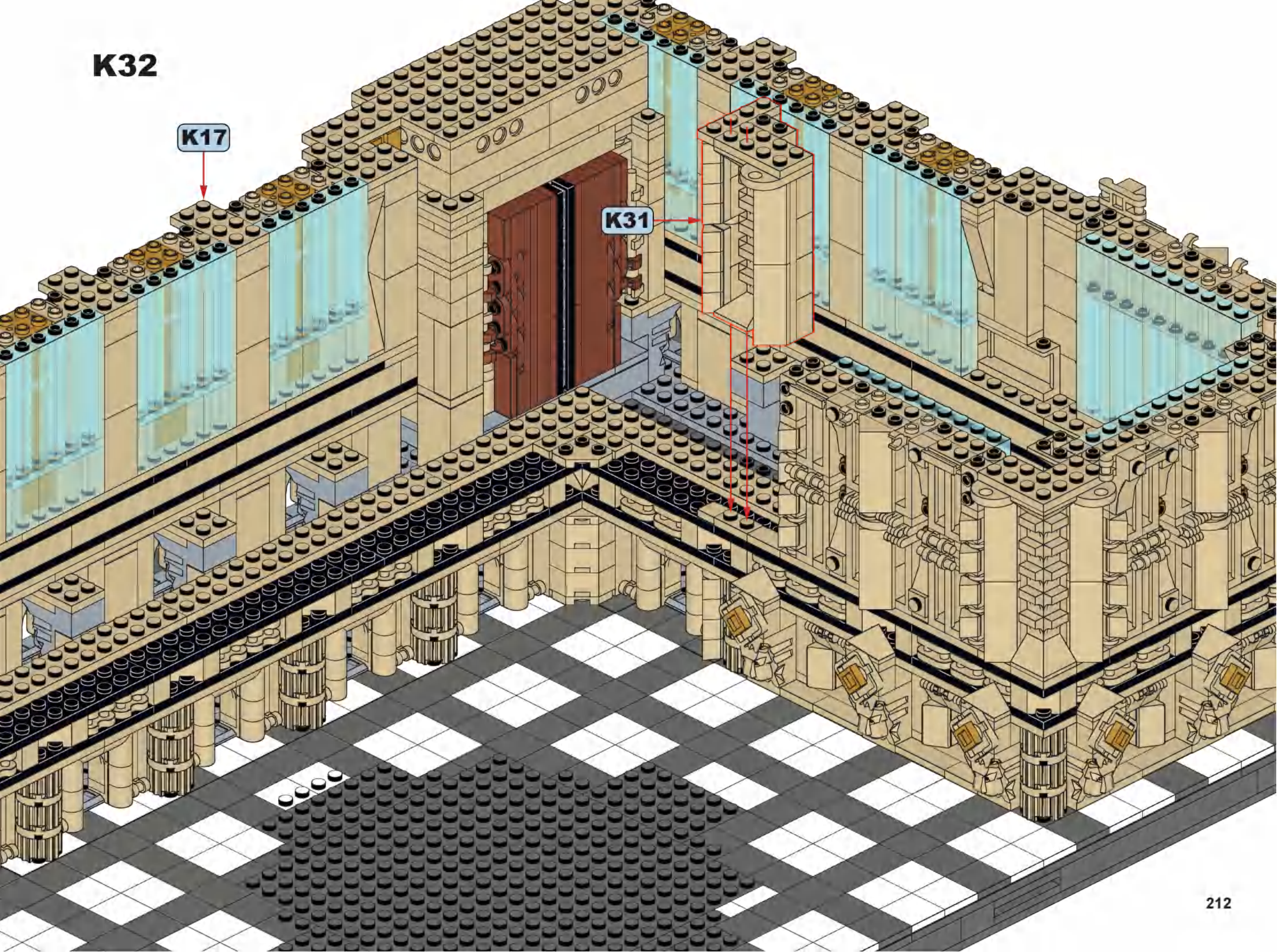

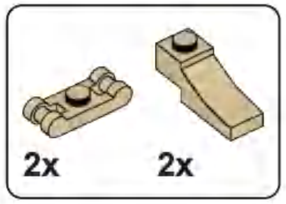

K33

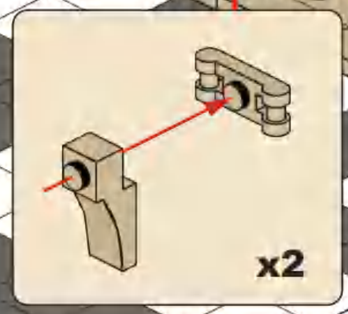

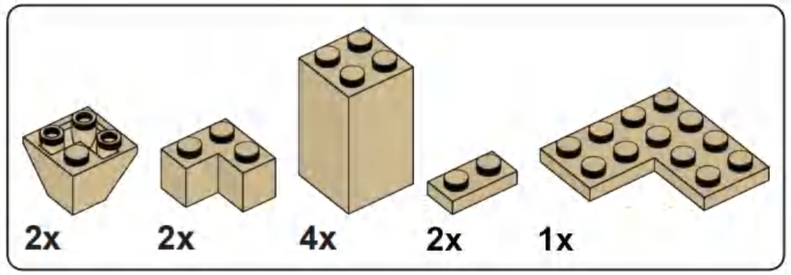

K34

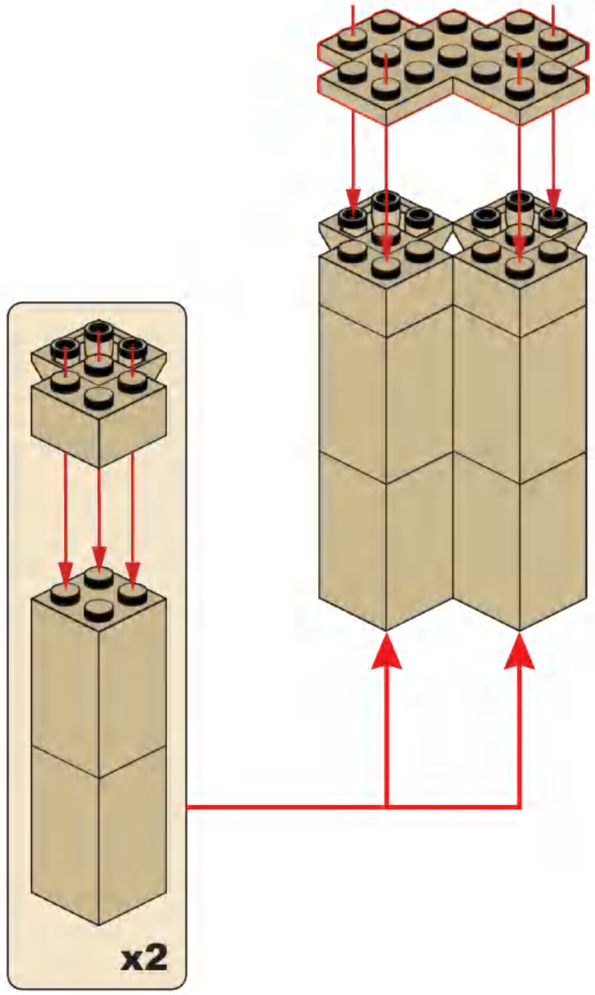

K35

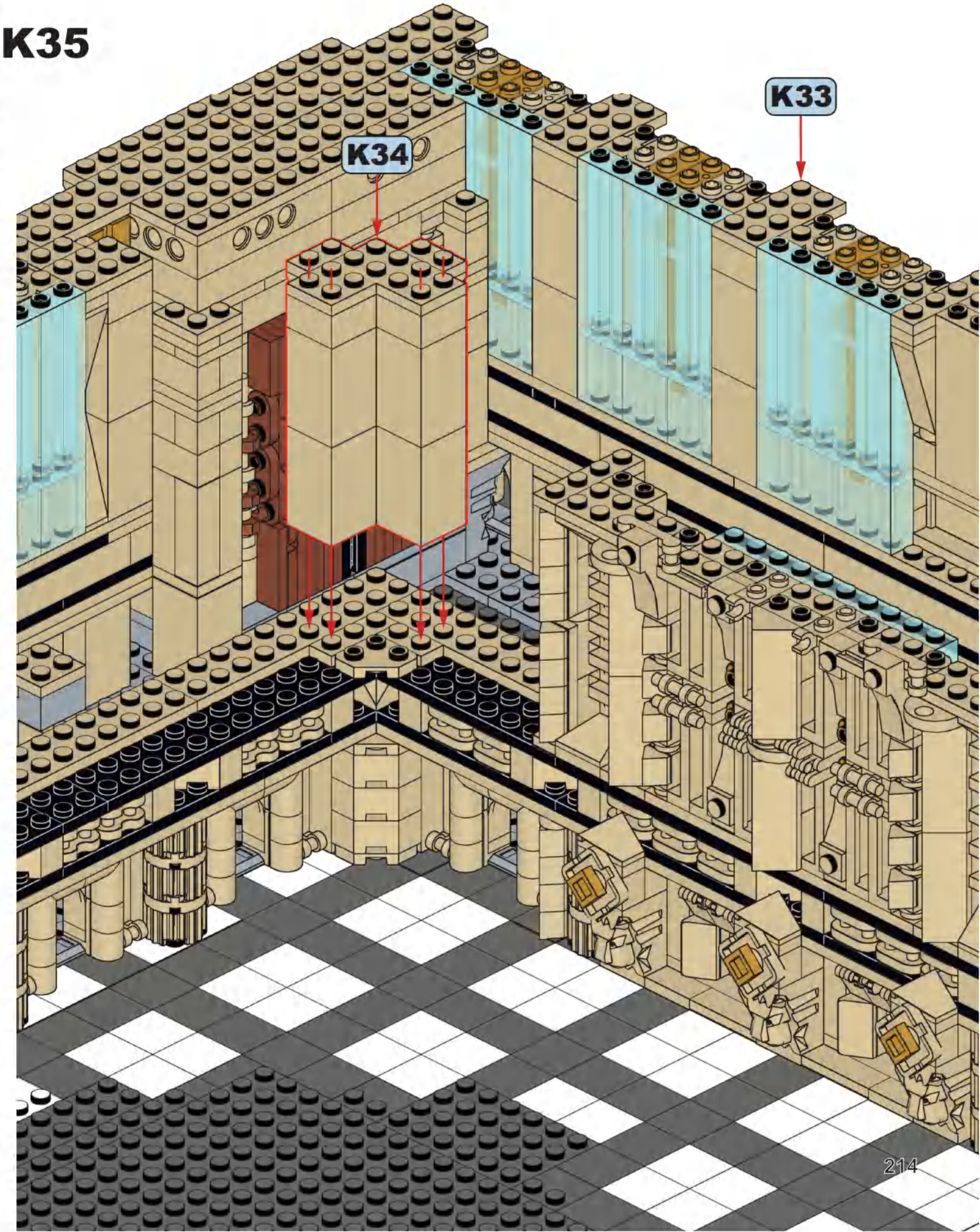

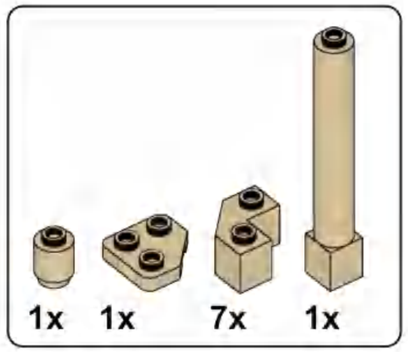

K36

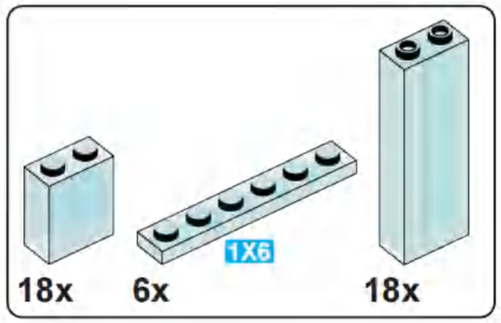

K37

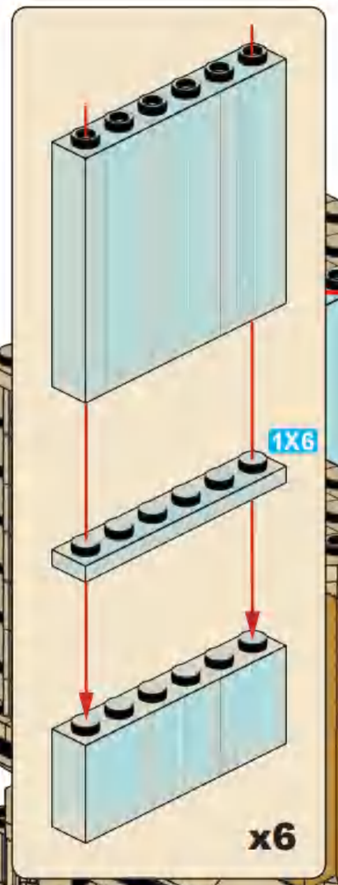

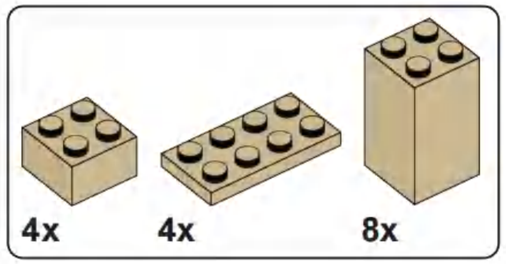

K38

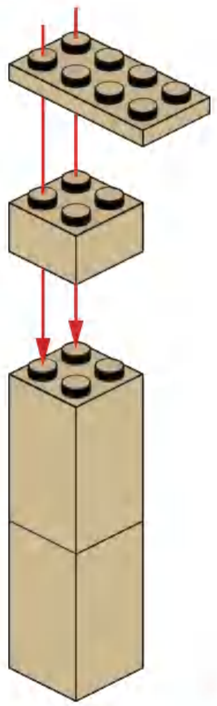

x4

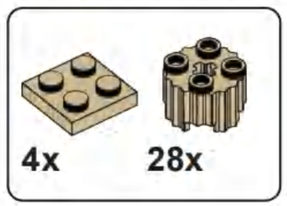

K39

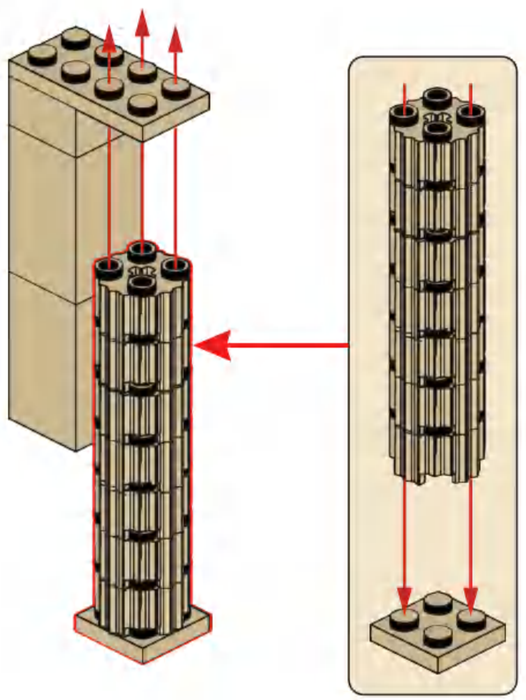

x4

K40

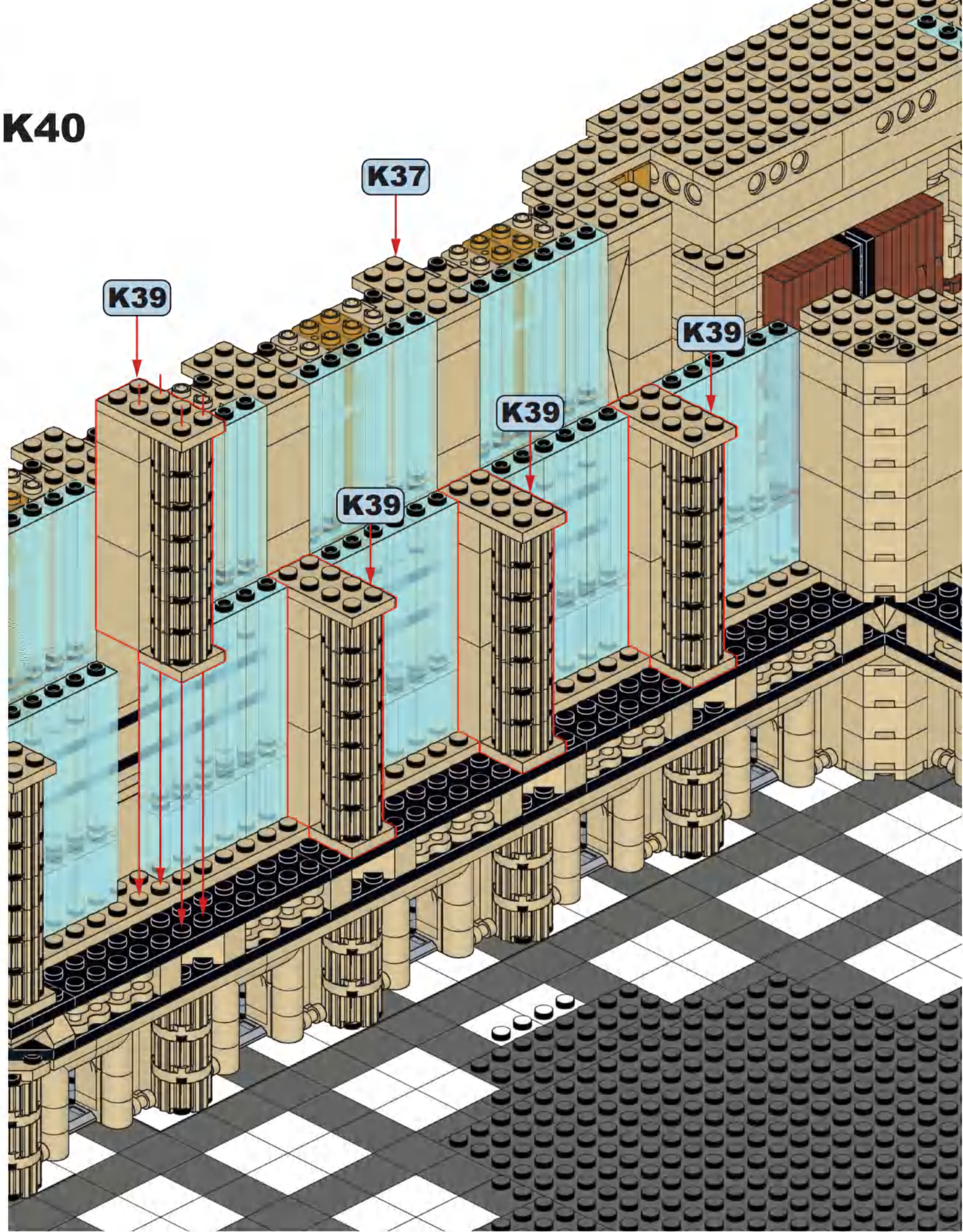

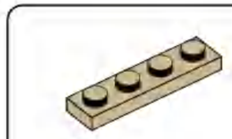

K41

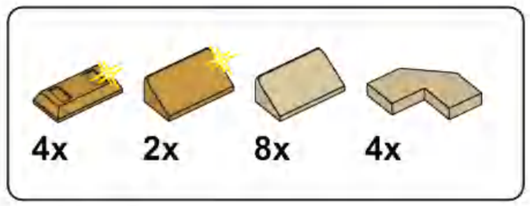

K42

12

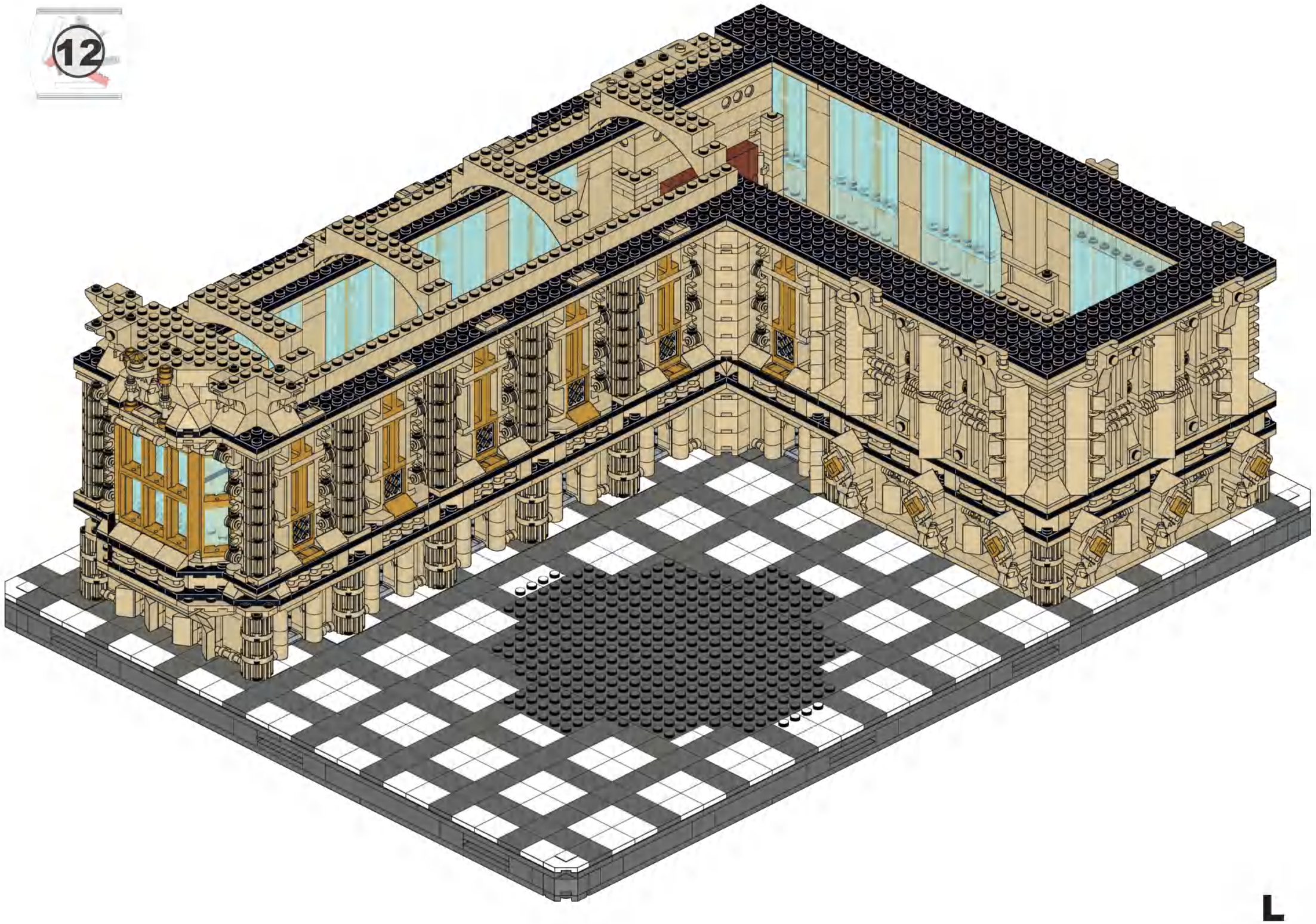

L

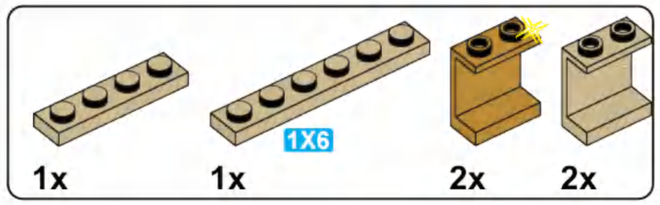

L1

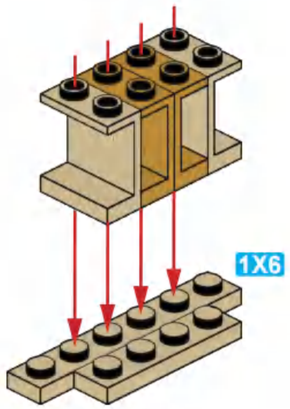

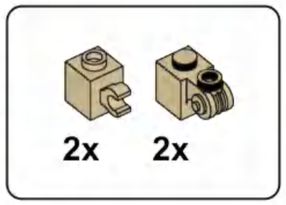

L2

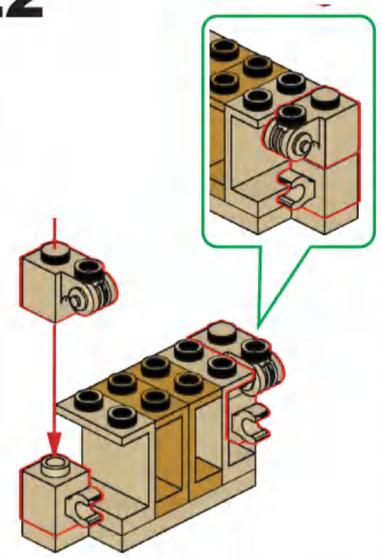

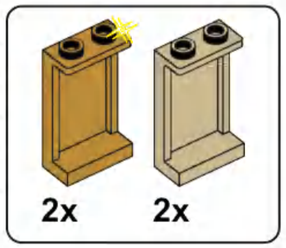

L3

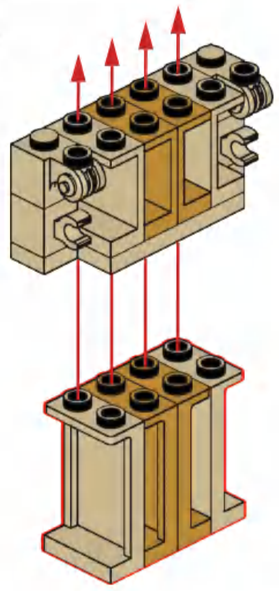

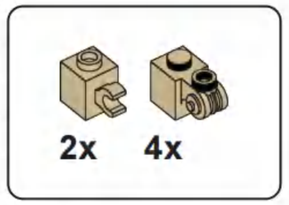

L4

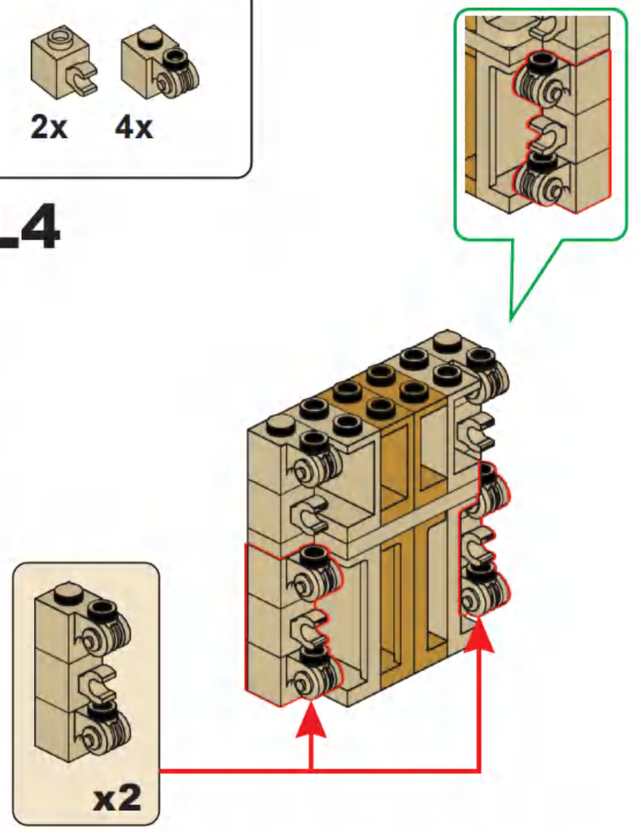

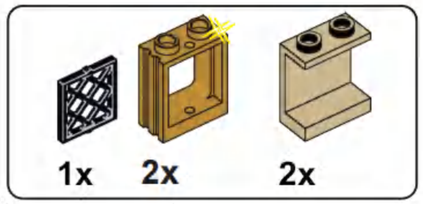

L5

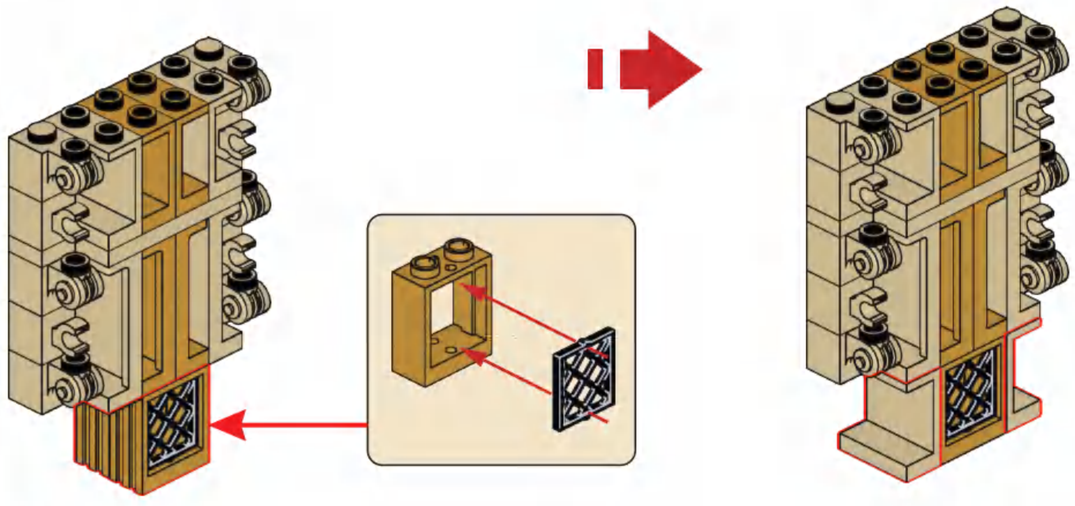

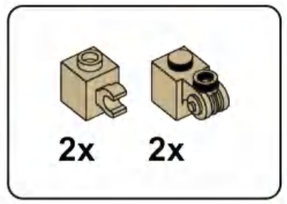

L6

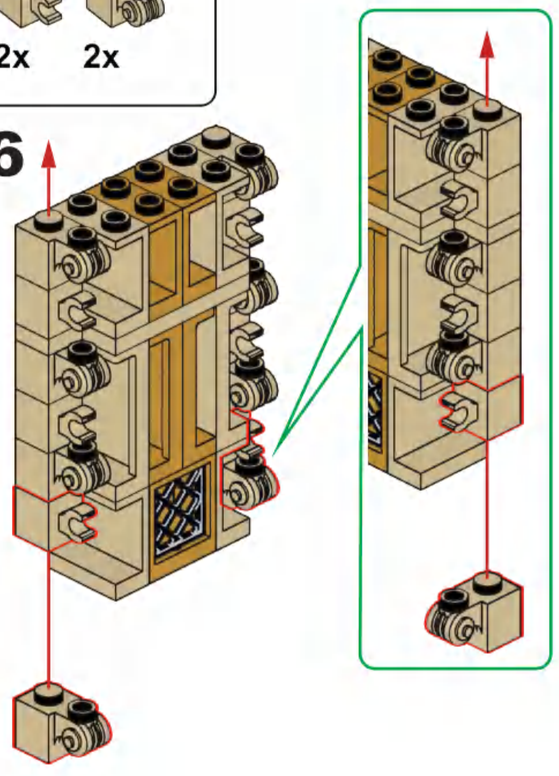

L7

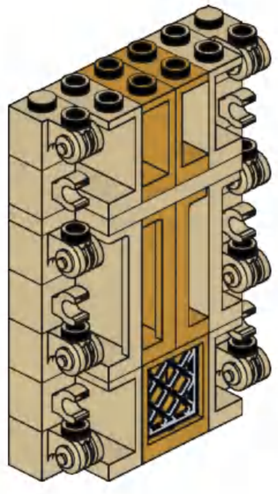

L8

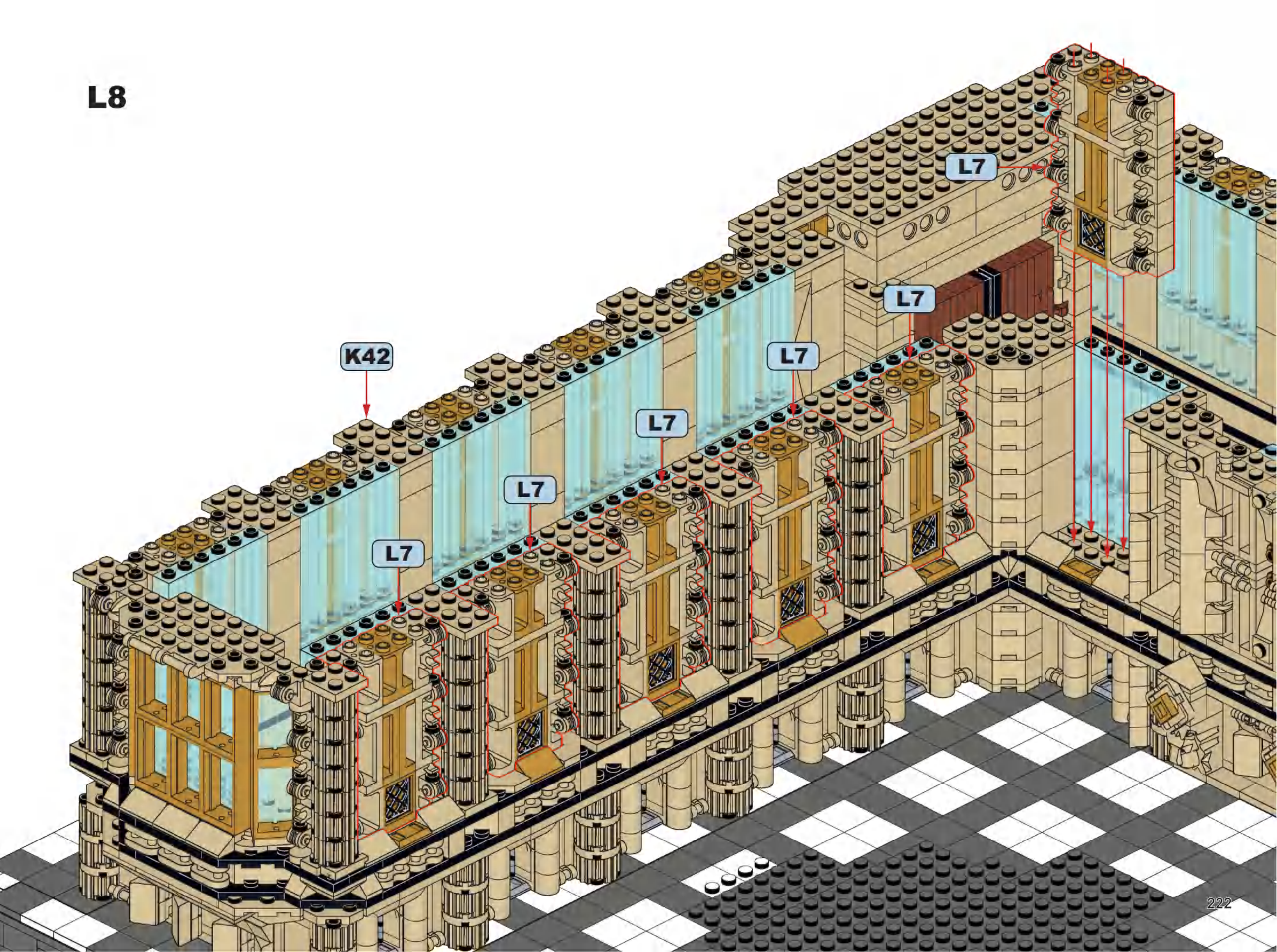

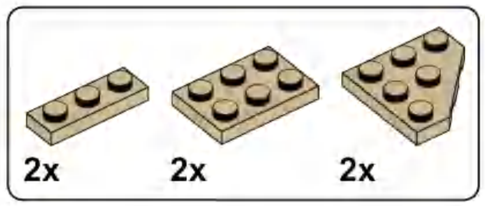

L9

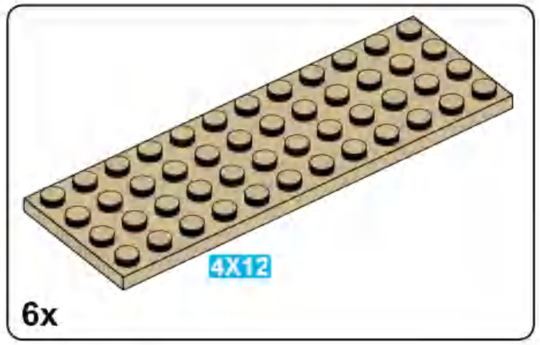

6x

L10

L11

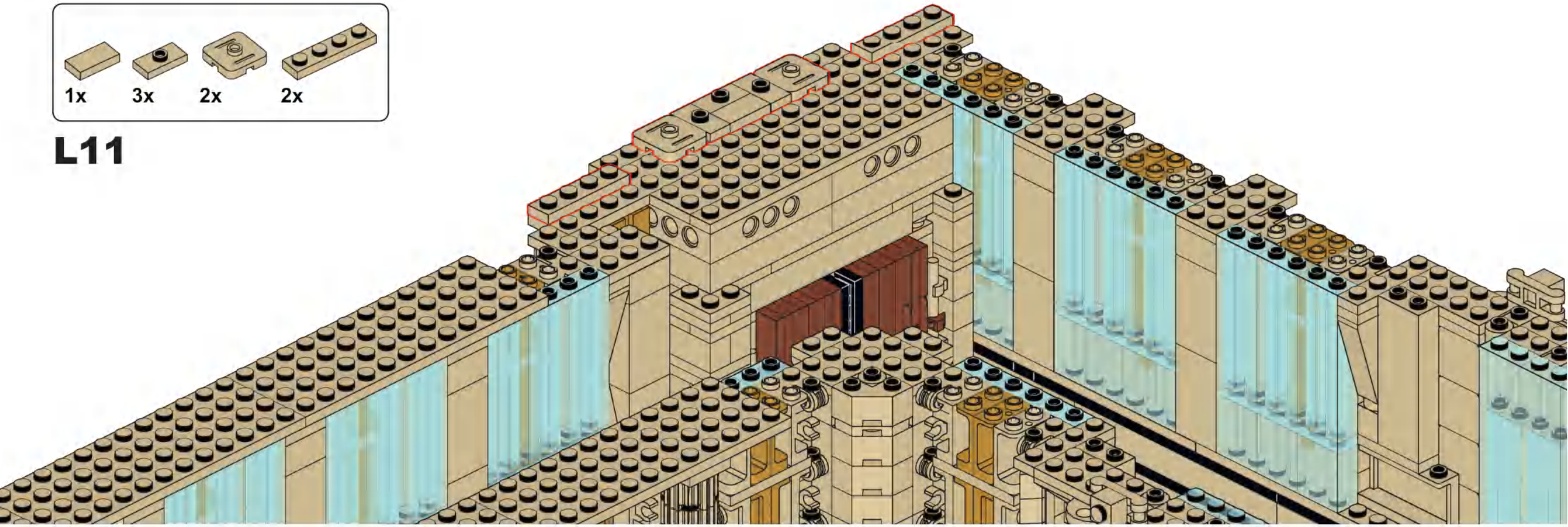

L12

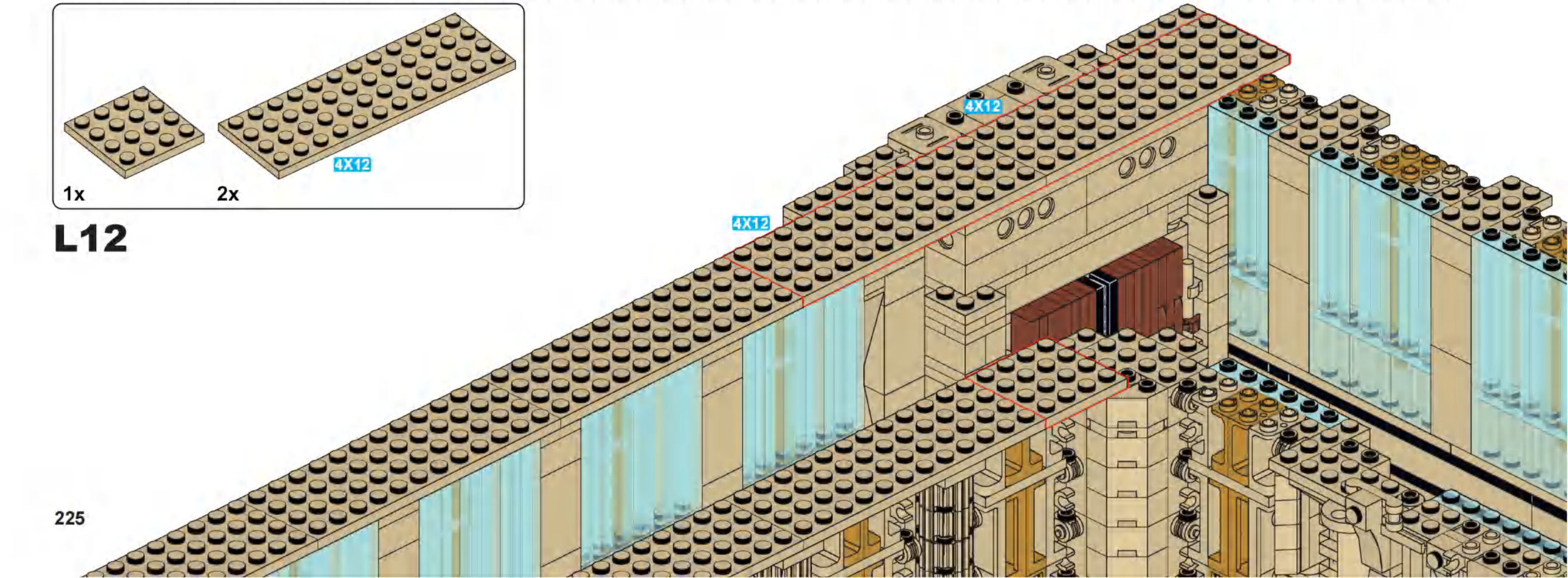

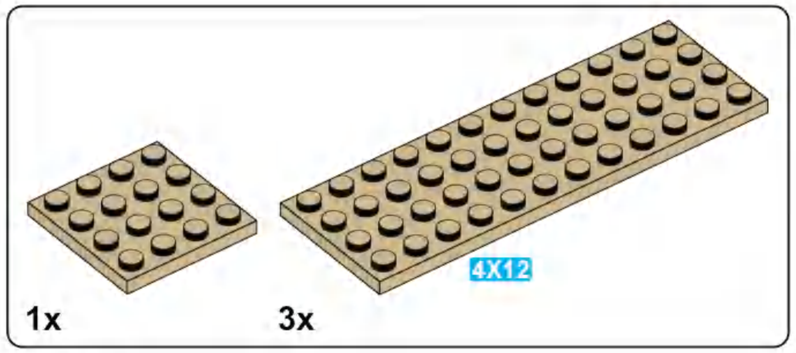

L13

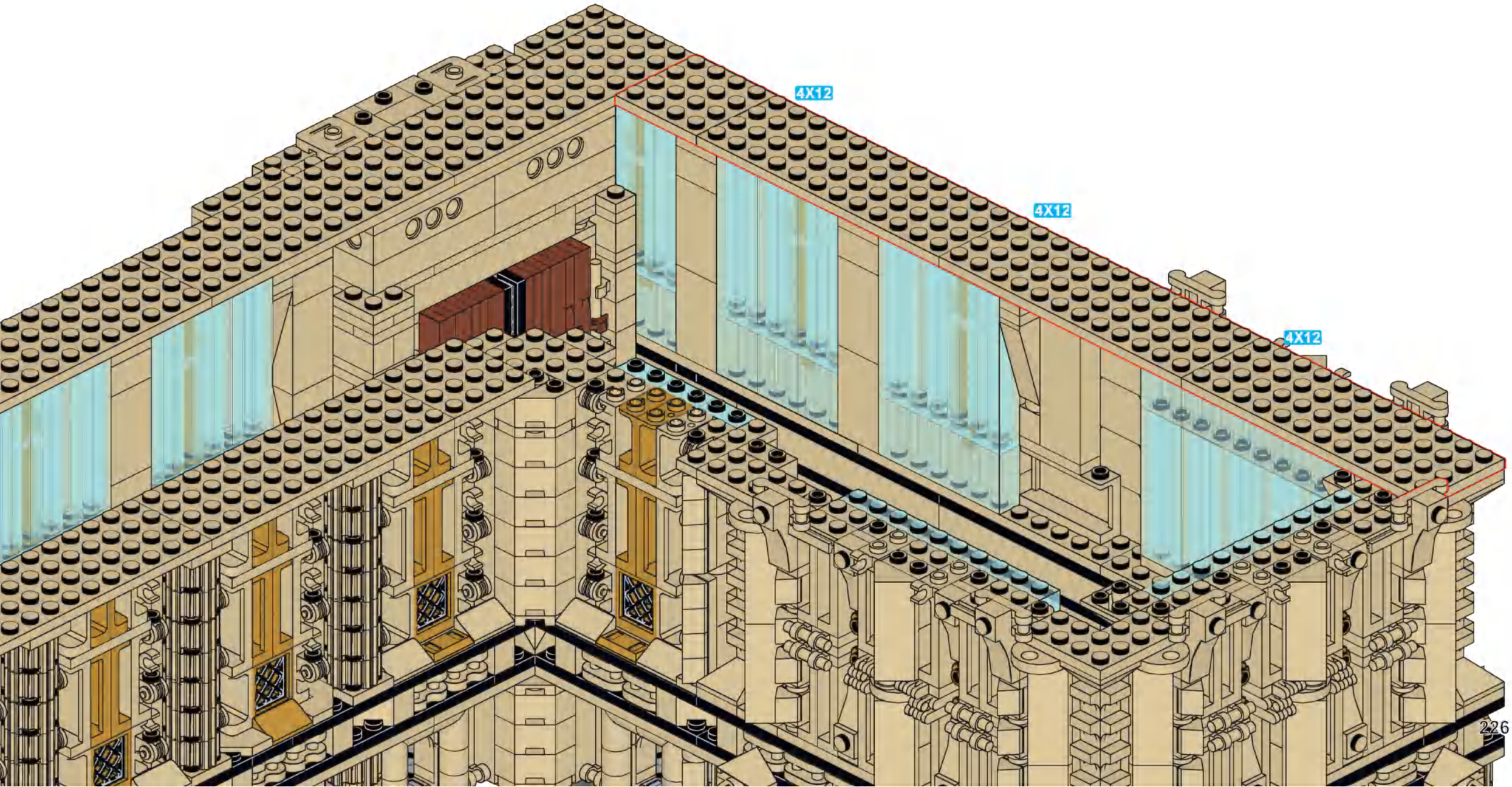

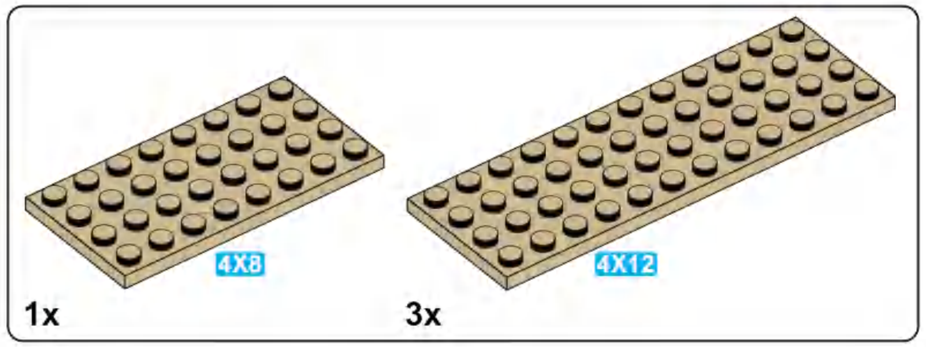

L14

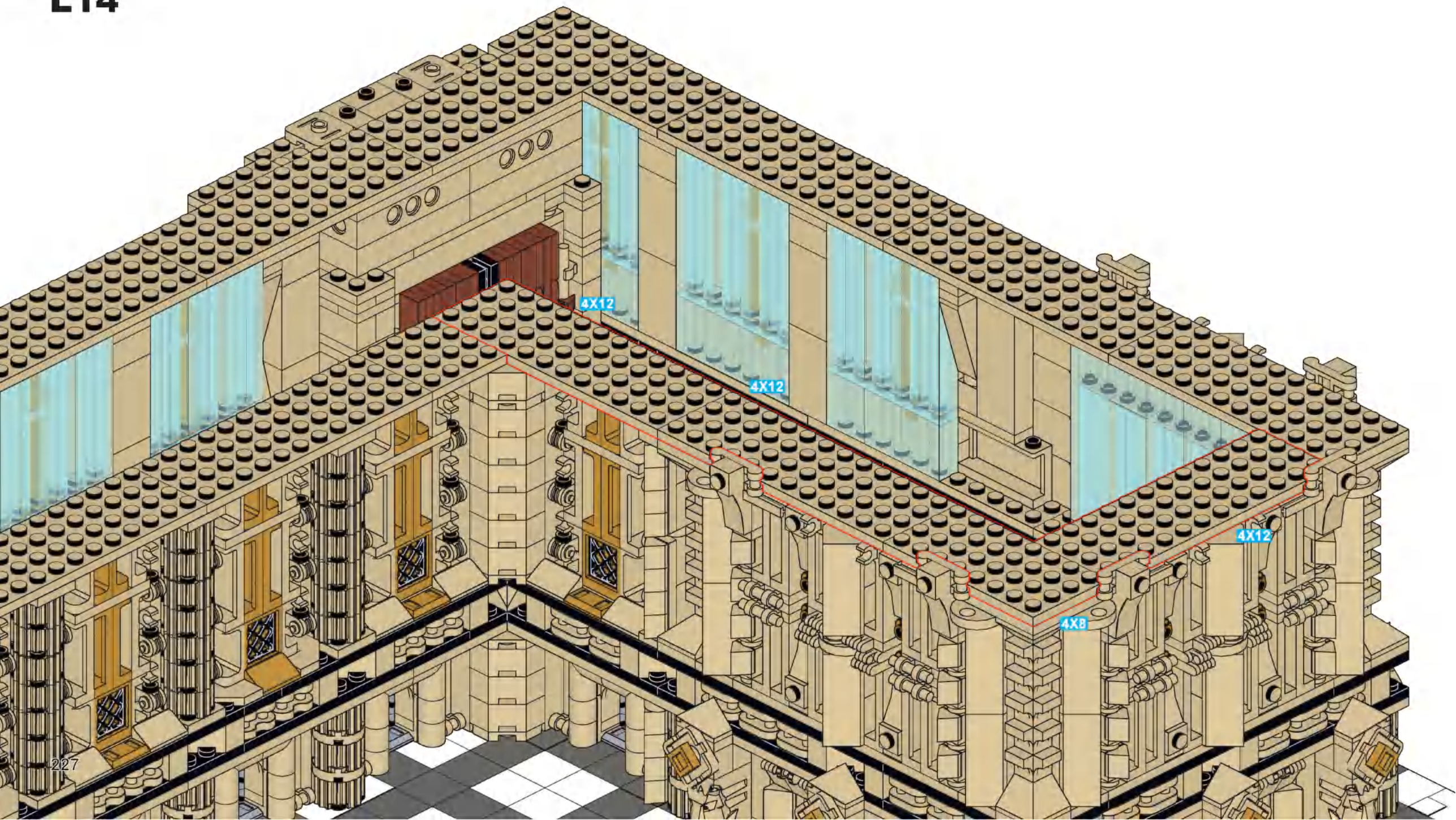

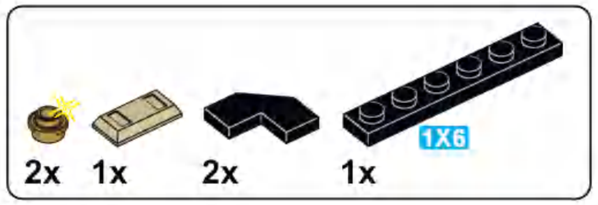

L15

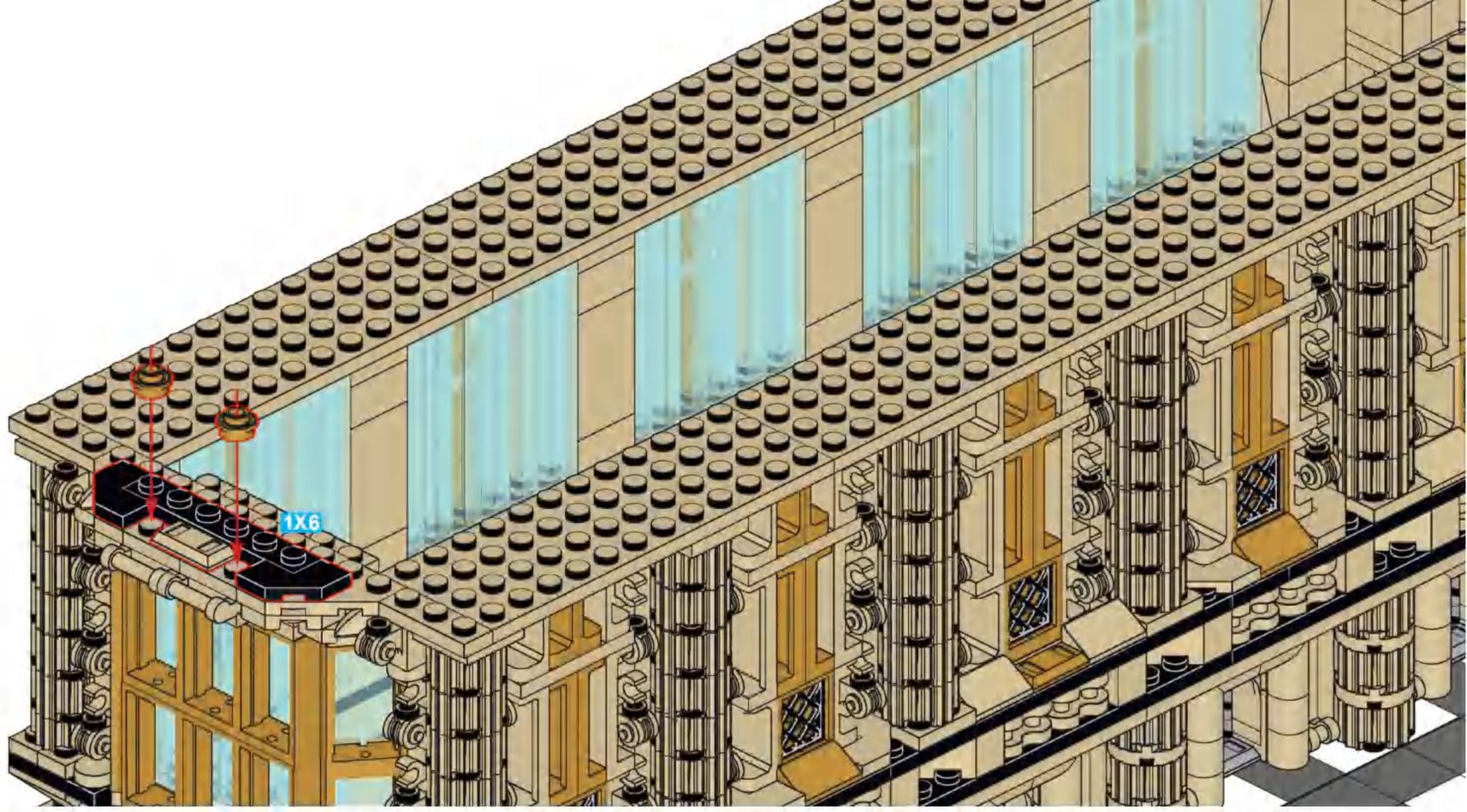

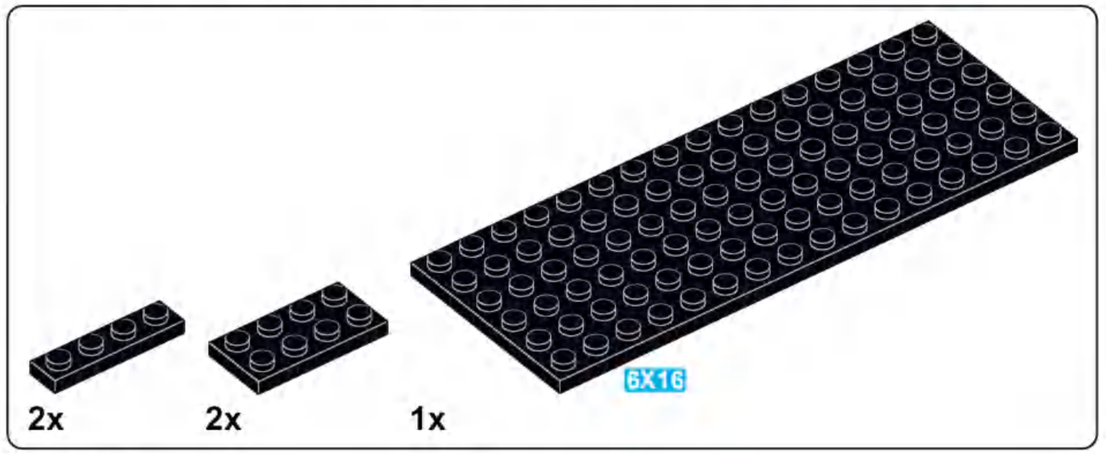

L16

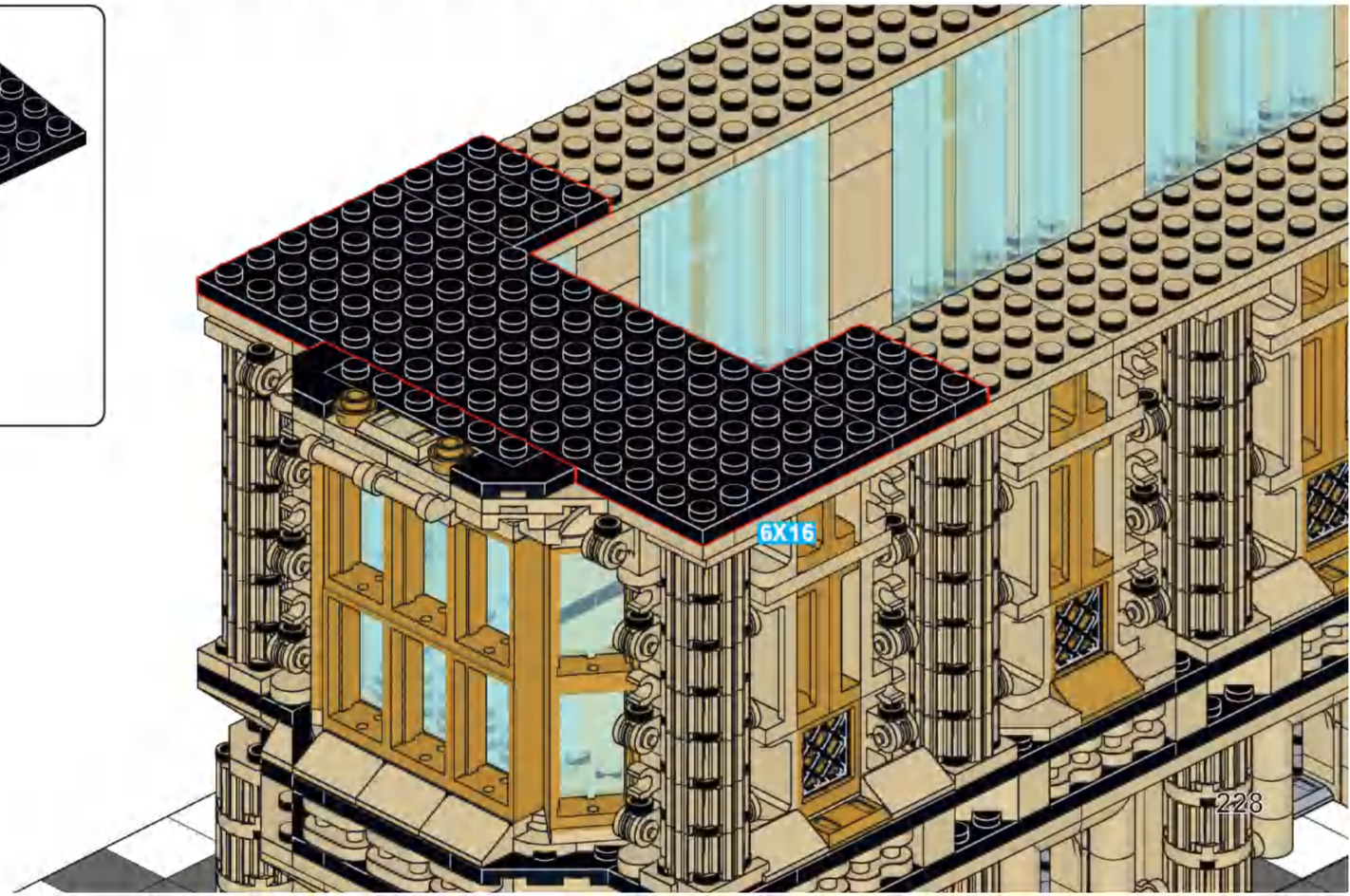

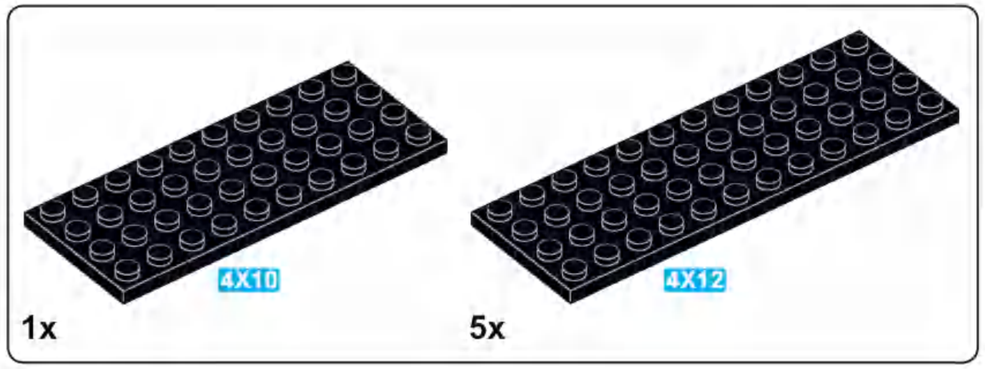

L17

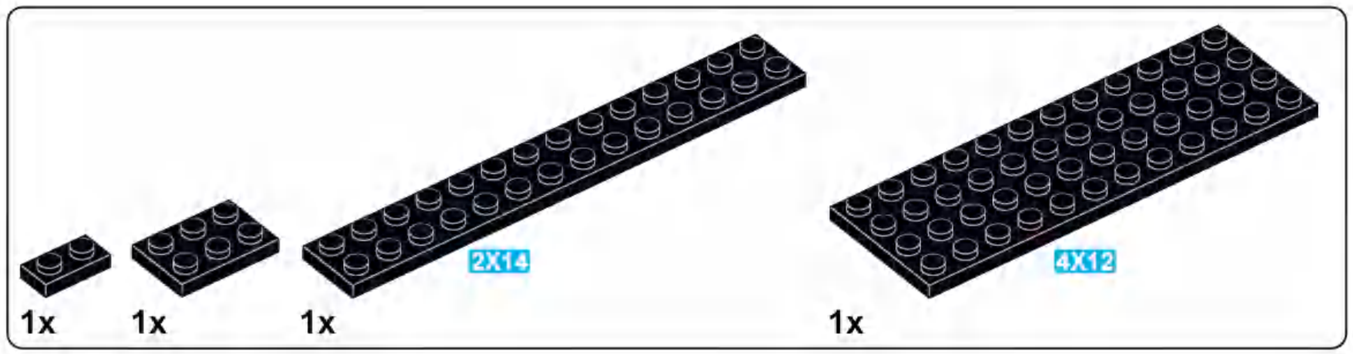

L18

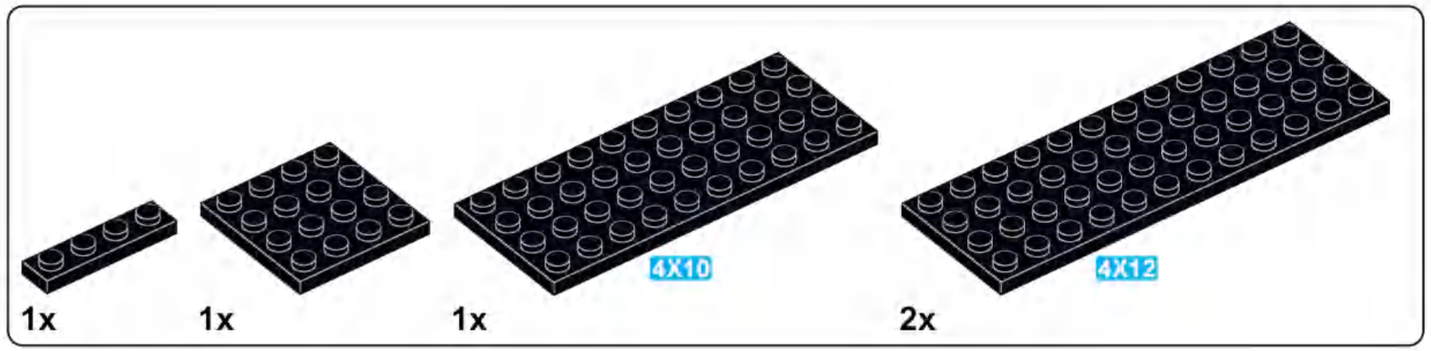

L19

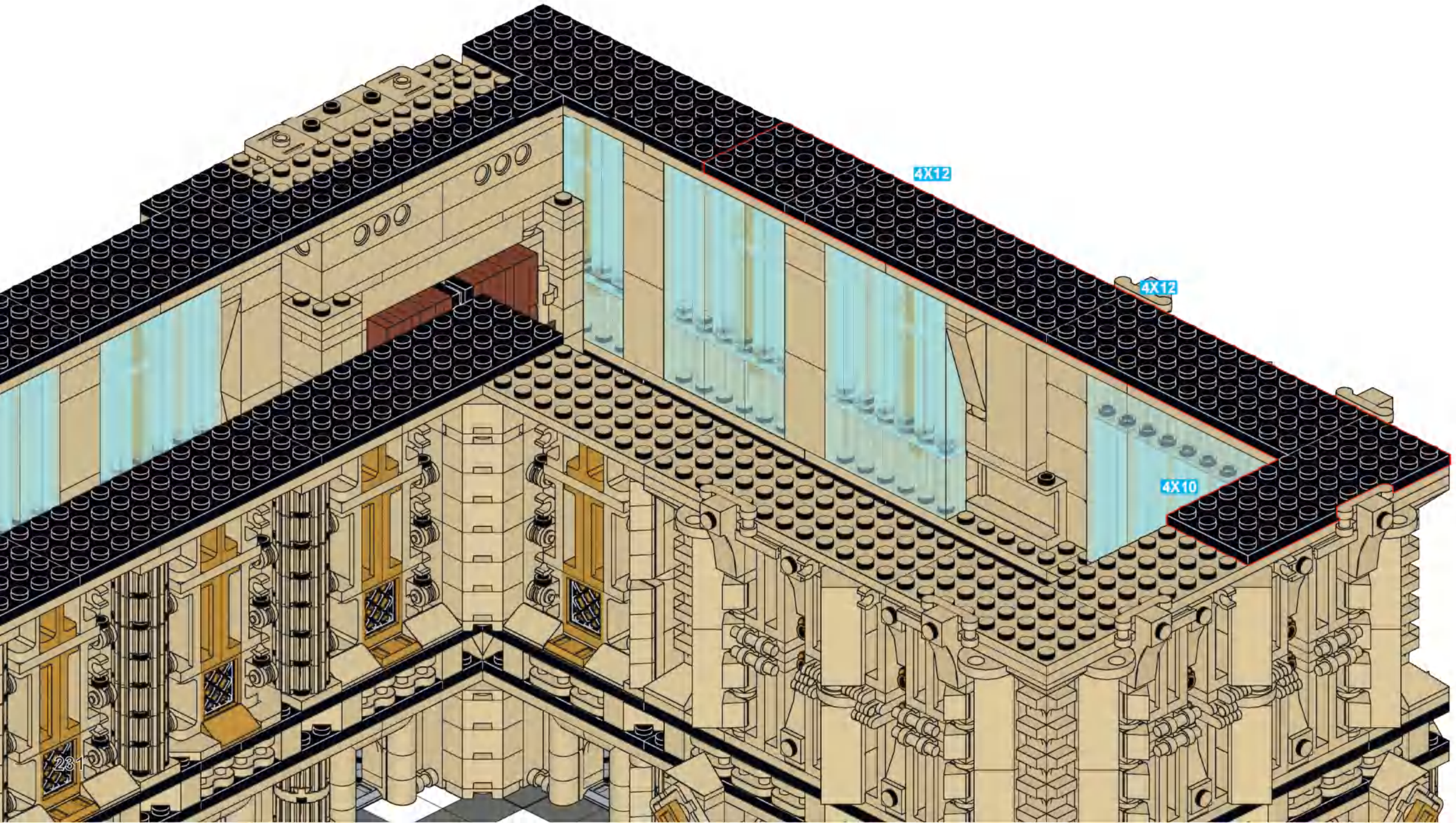

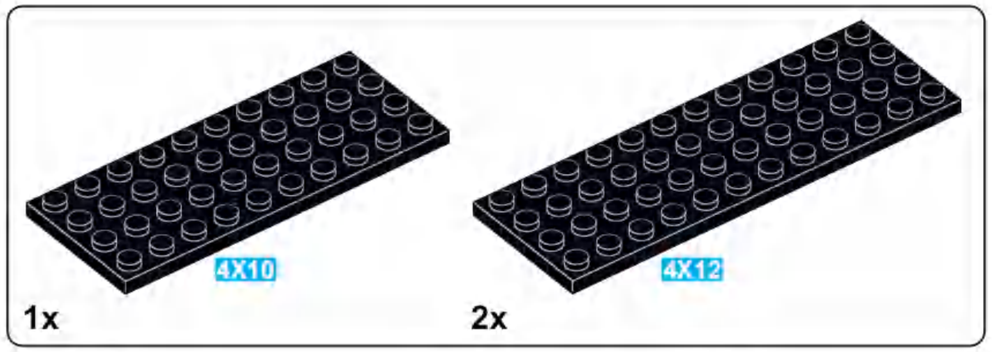

L20

10x

L21

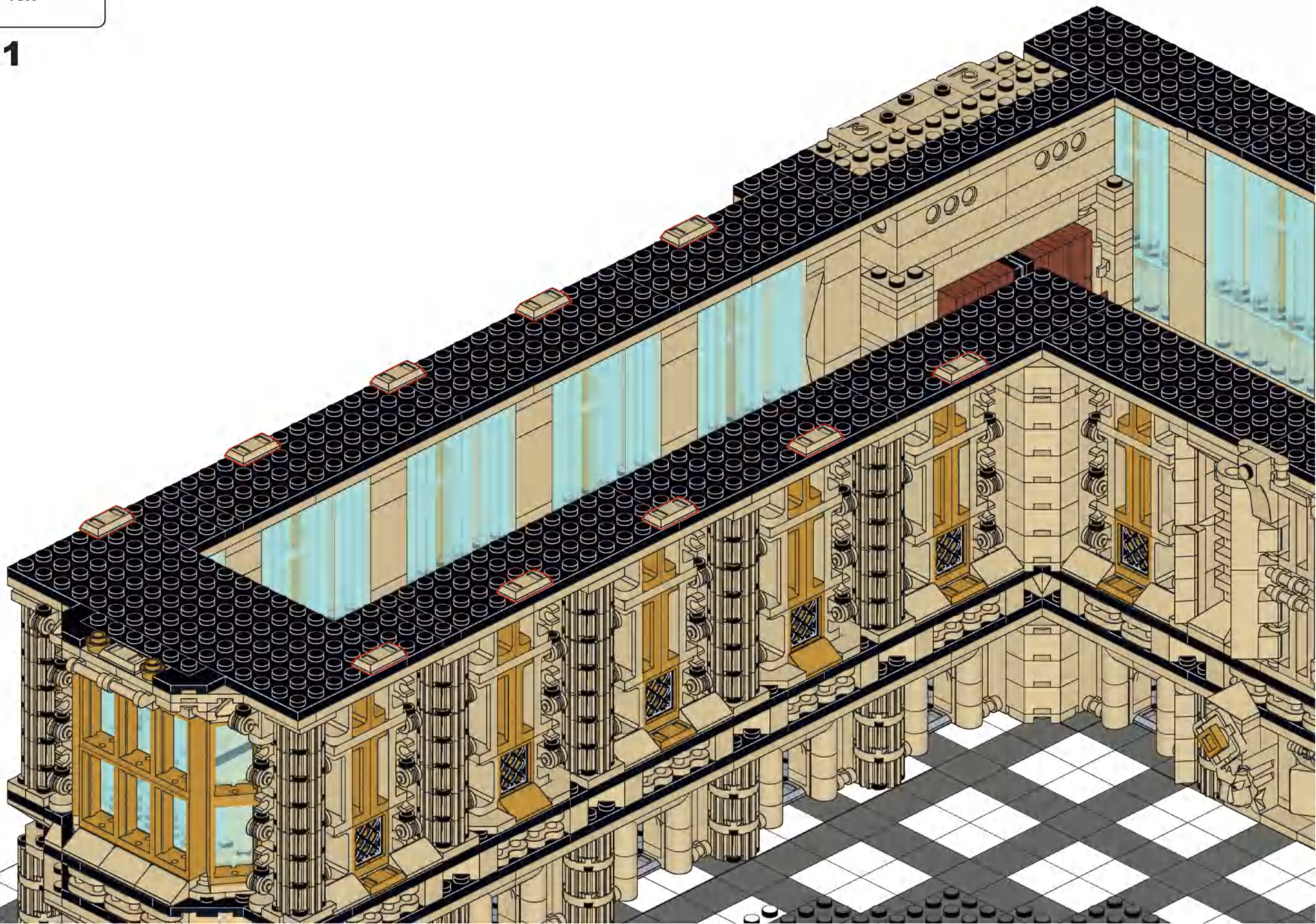

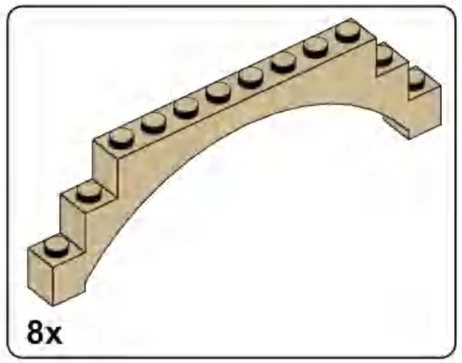

L22

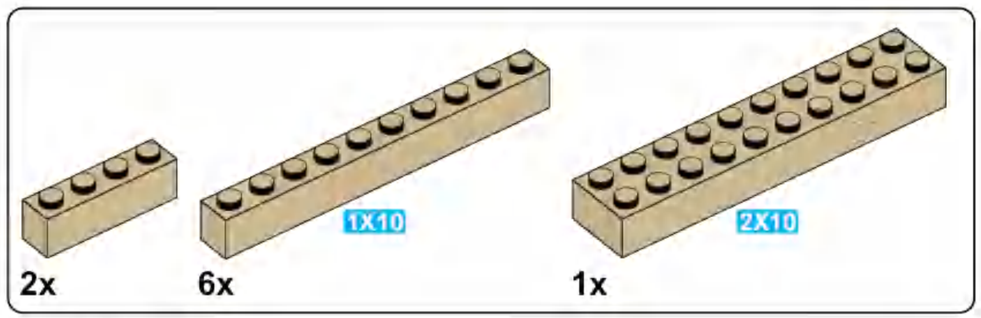

L23

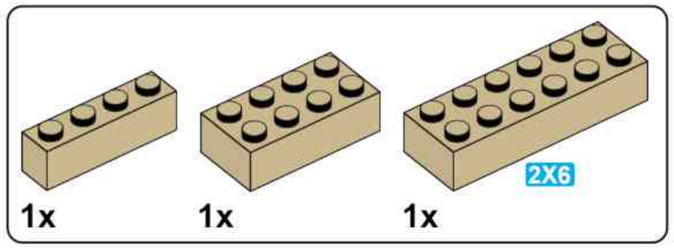

L24

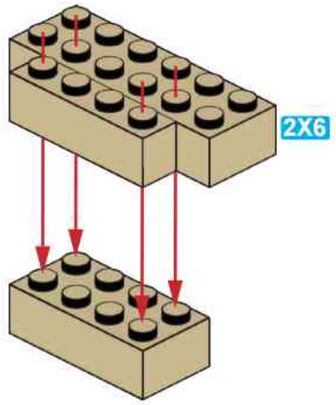

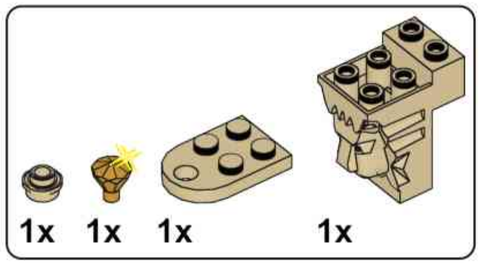

L25

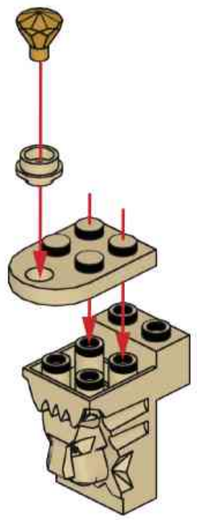

L26

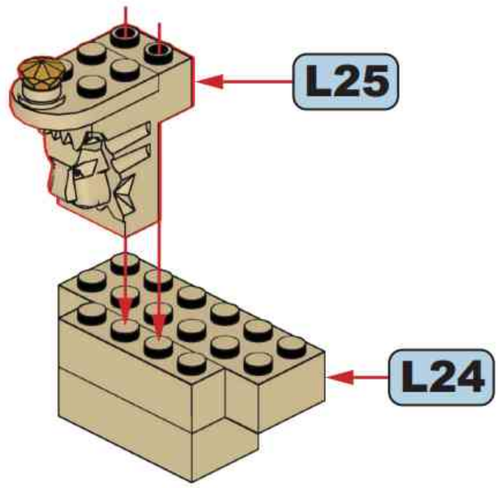

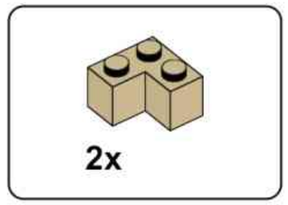

L27

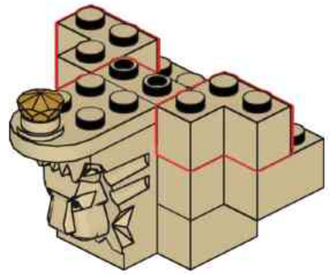

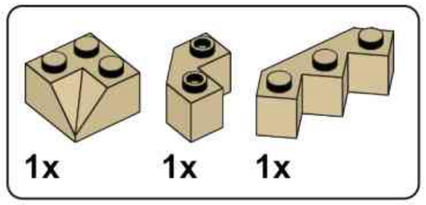

L28

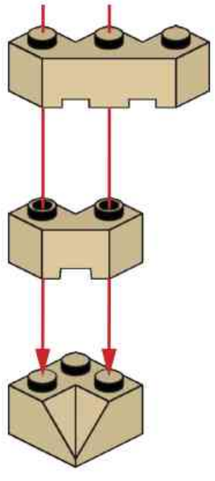

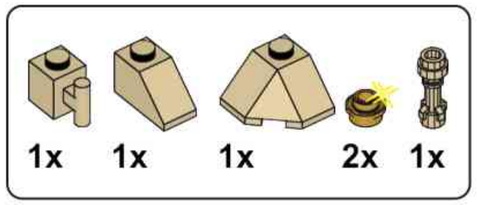

L29

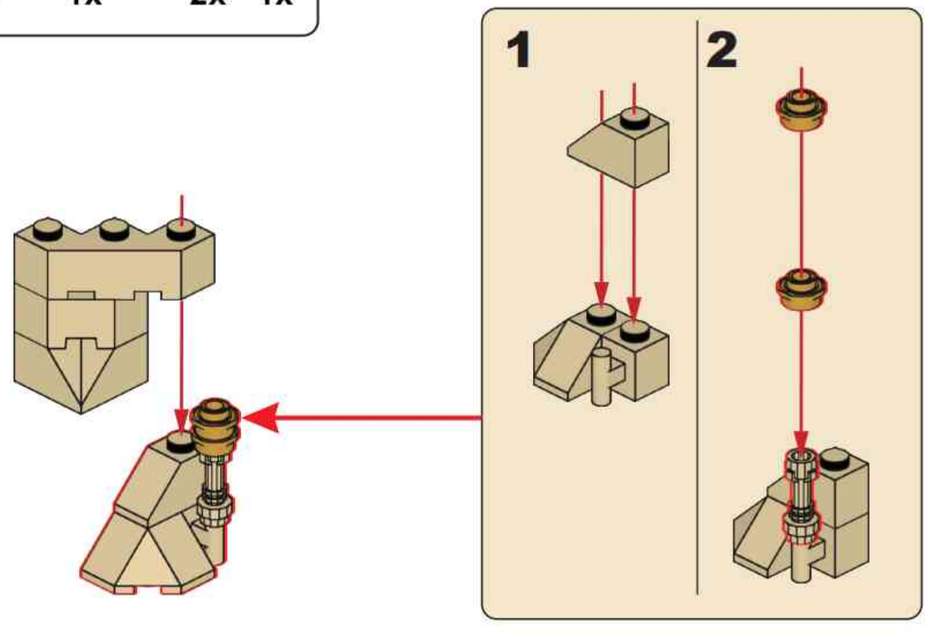

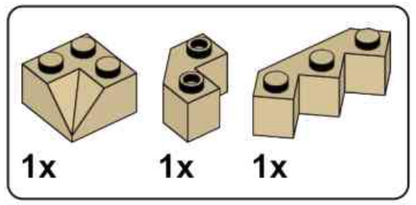

L30

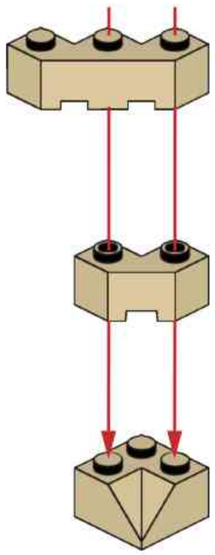

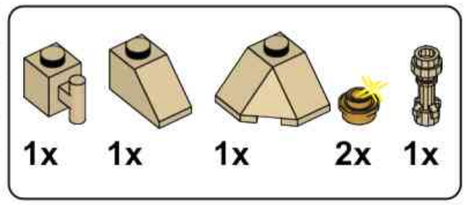

L31

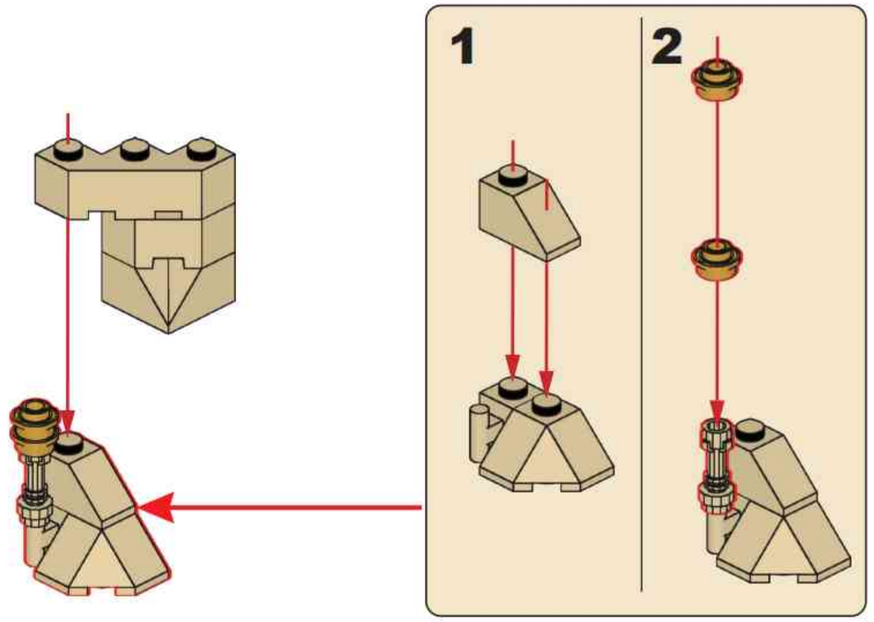

L32

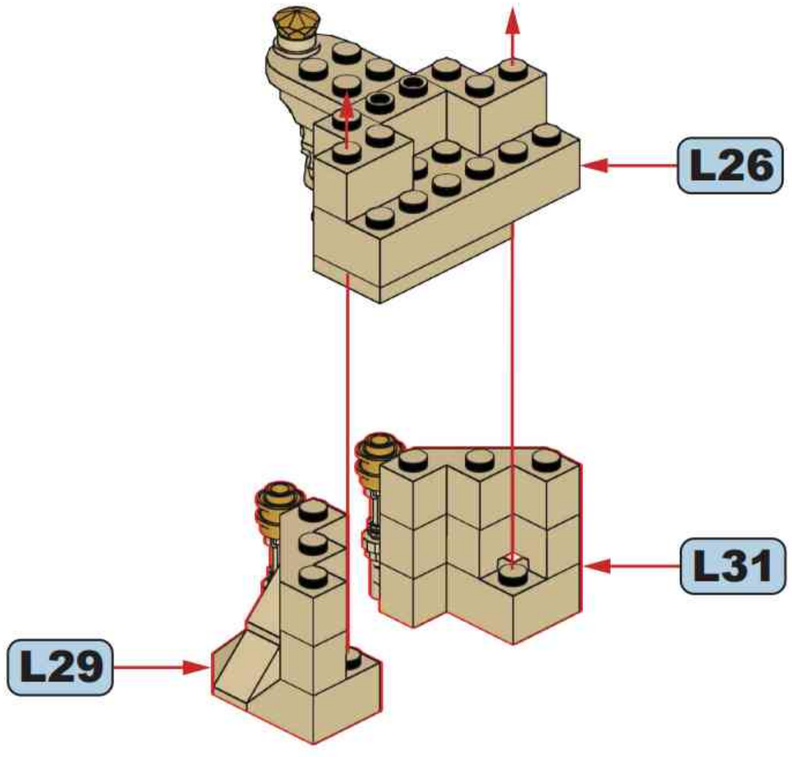

L33

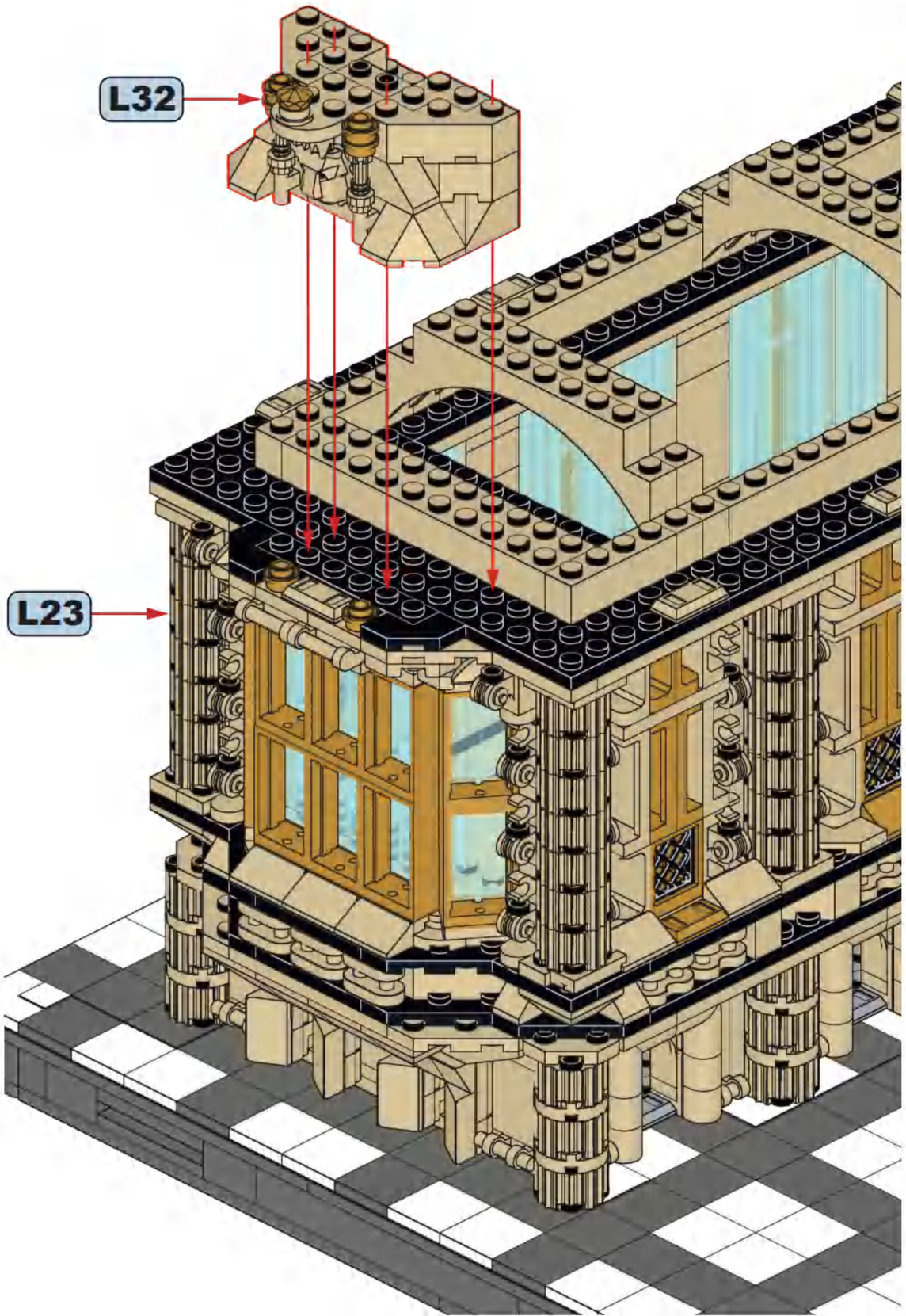

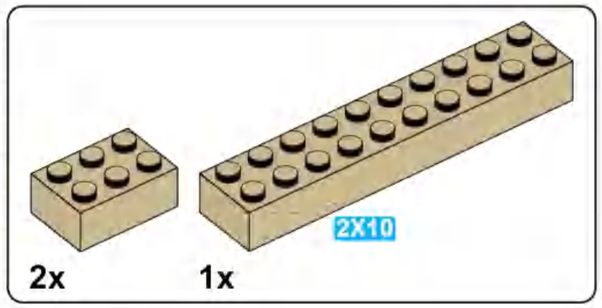

L34

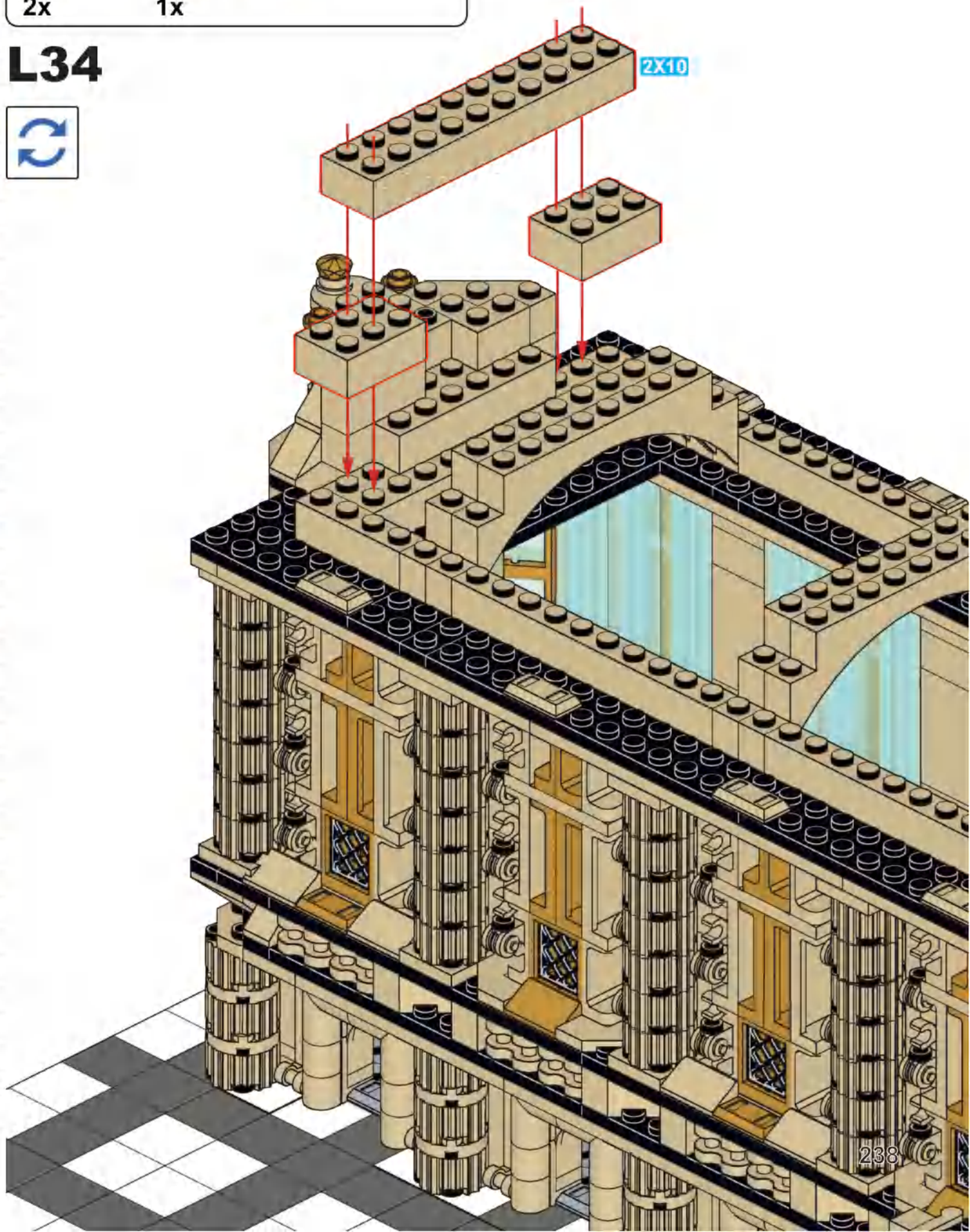

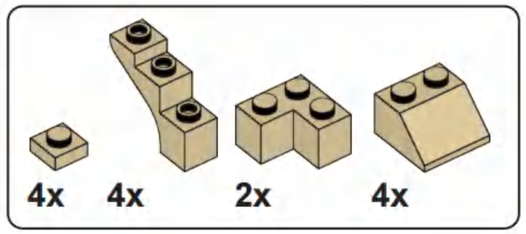

L35

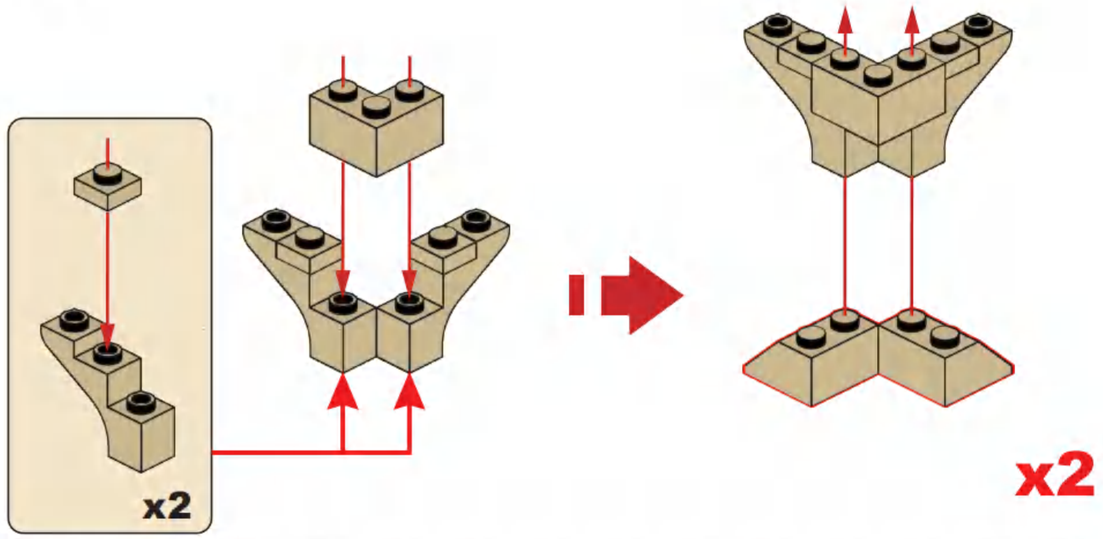

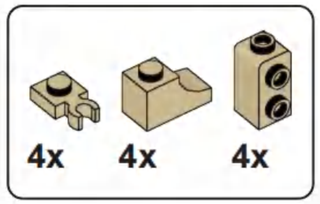

L36

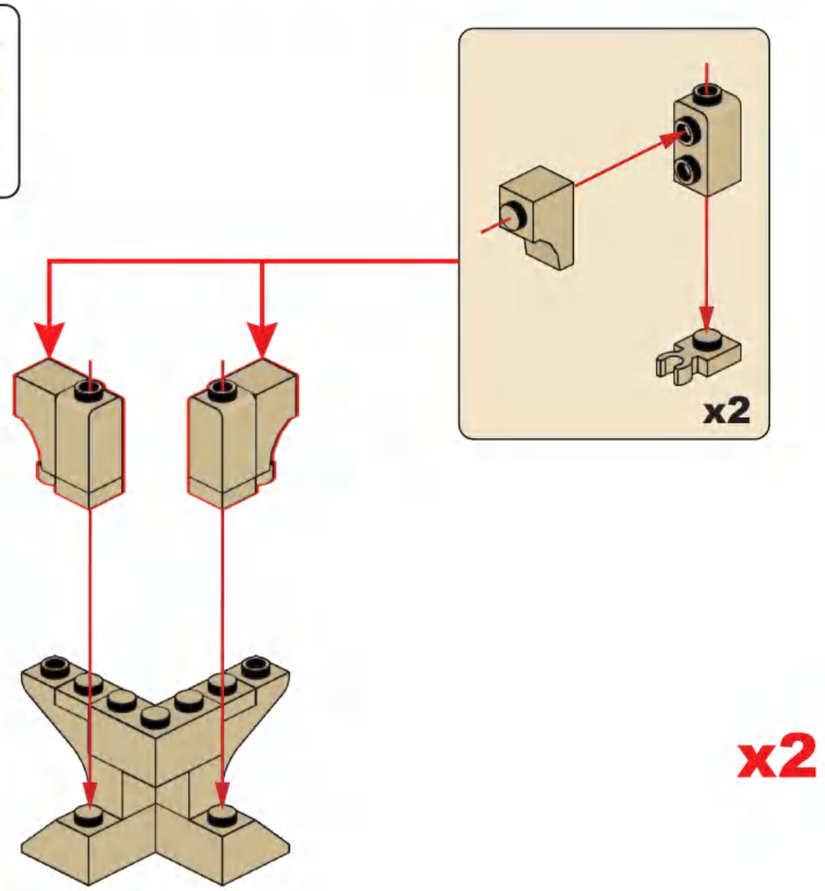

L37

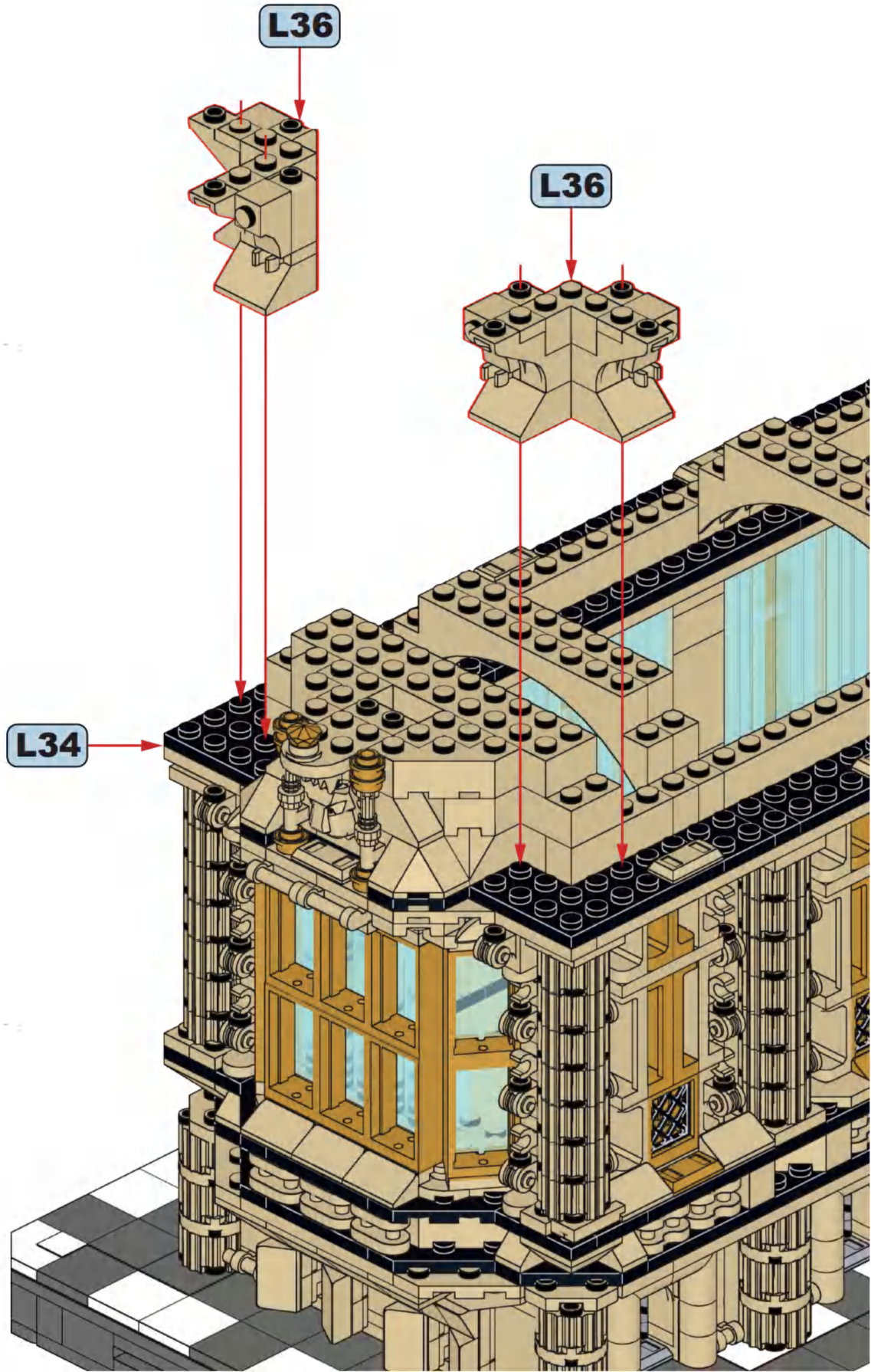

13

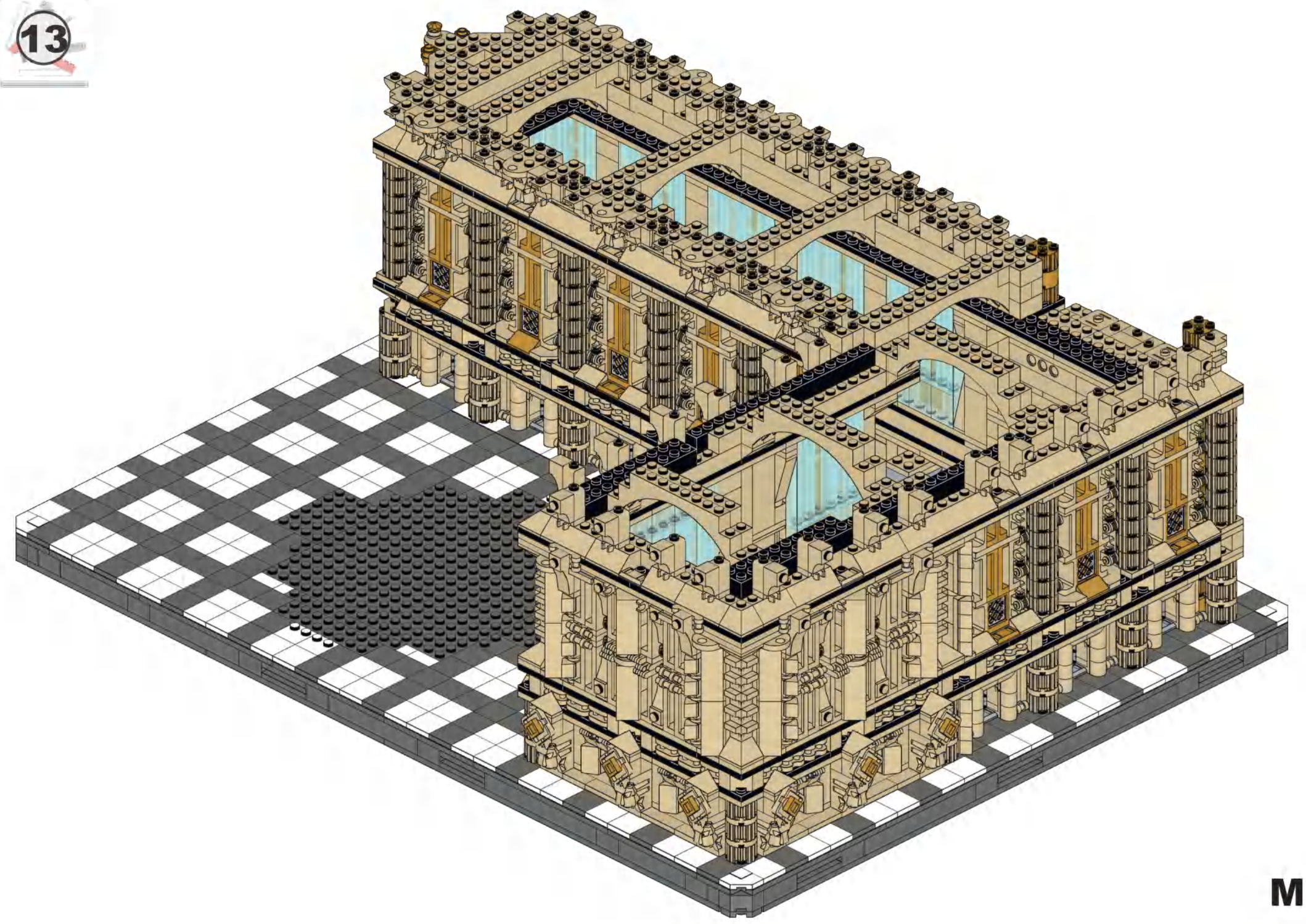

M

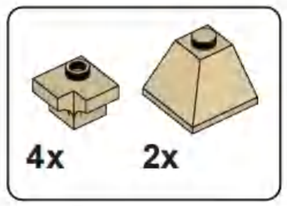

M1

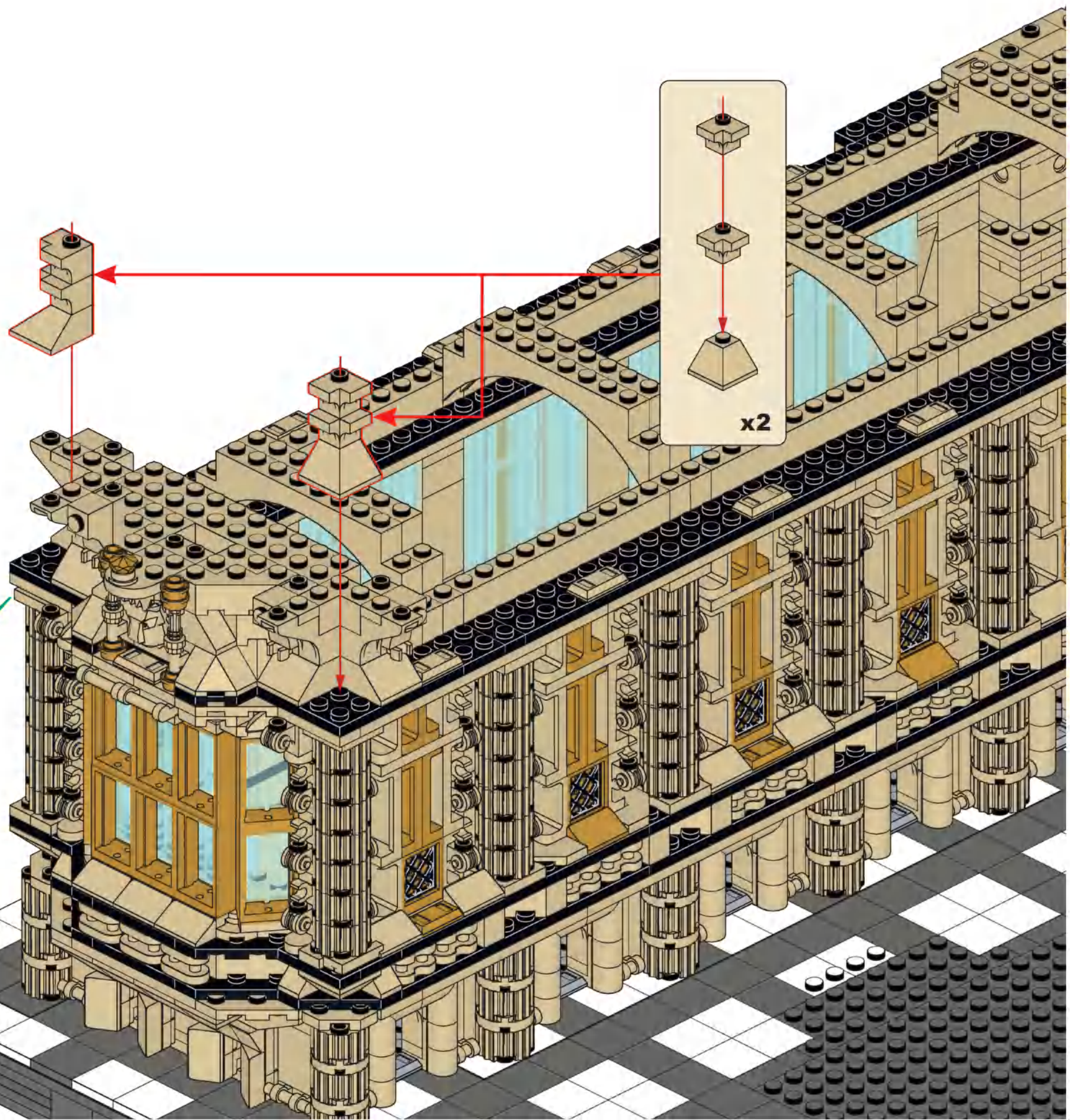

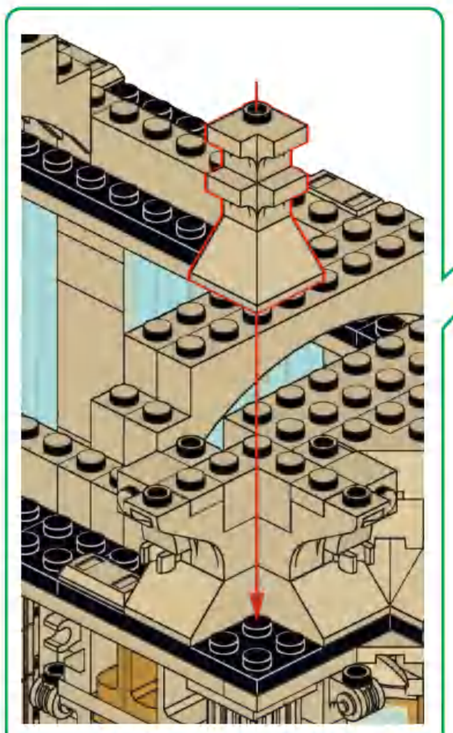

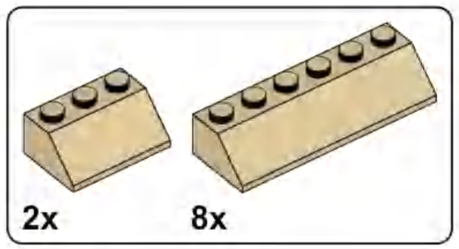

M2

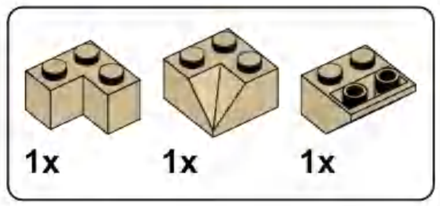

M3

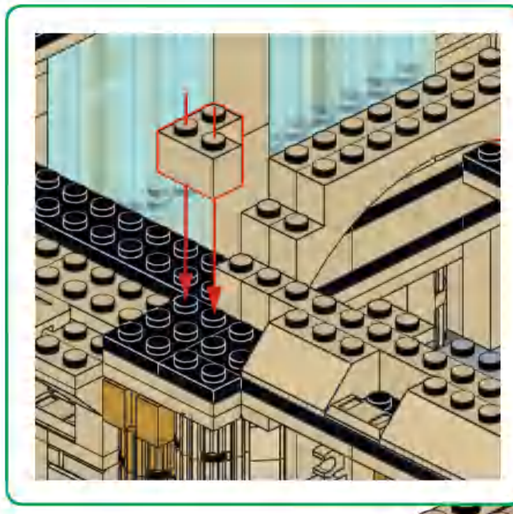

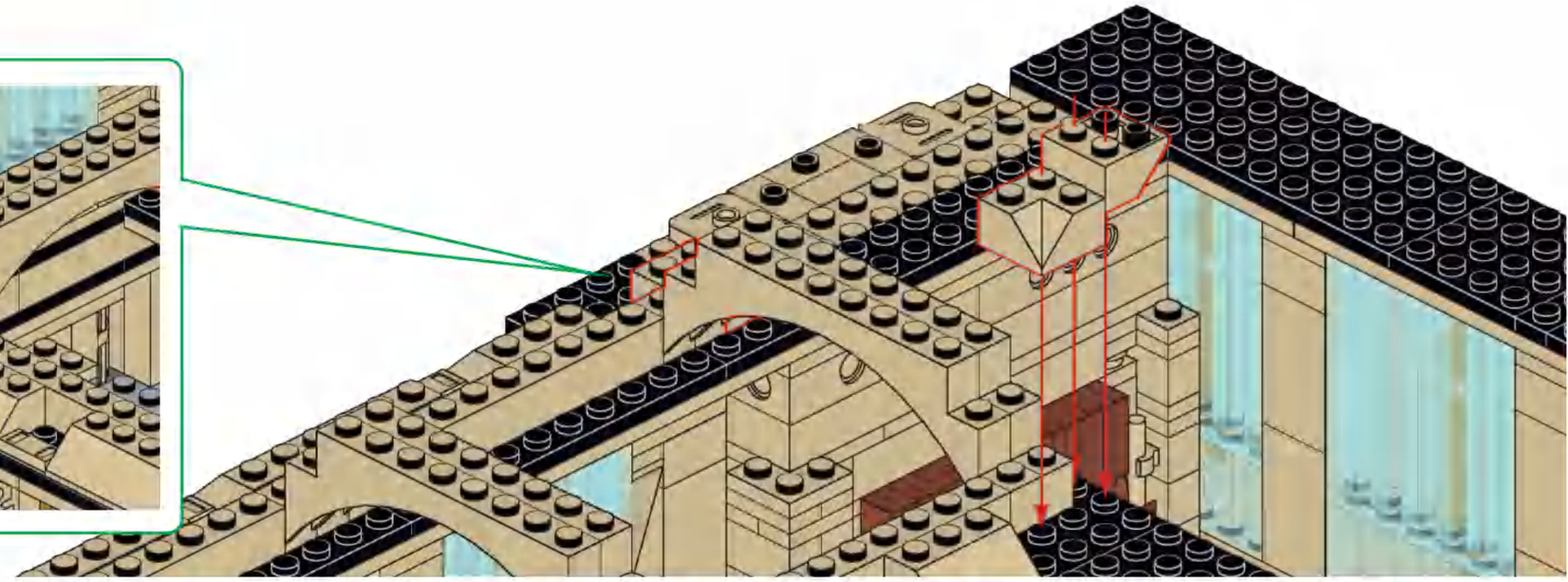

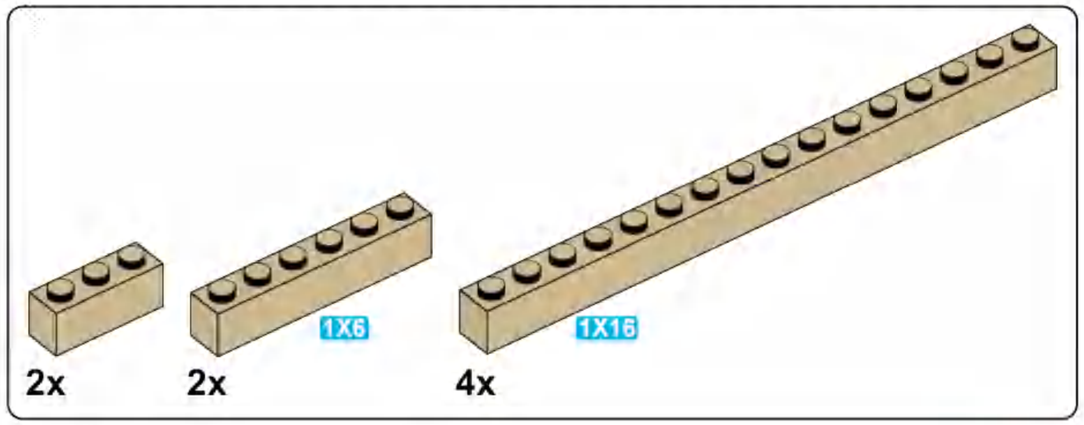

M4

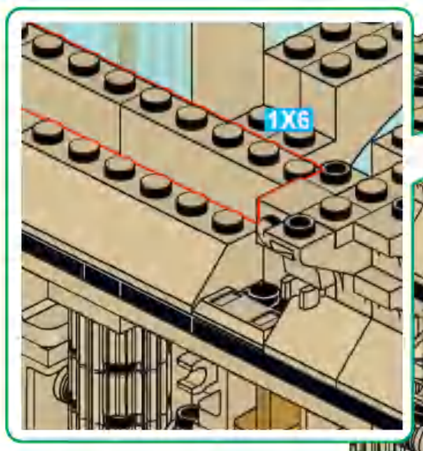

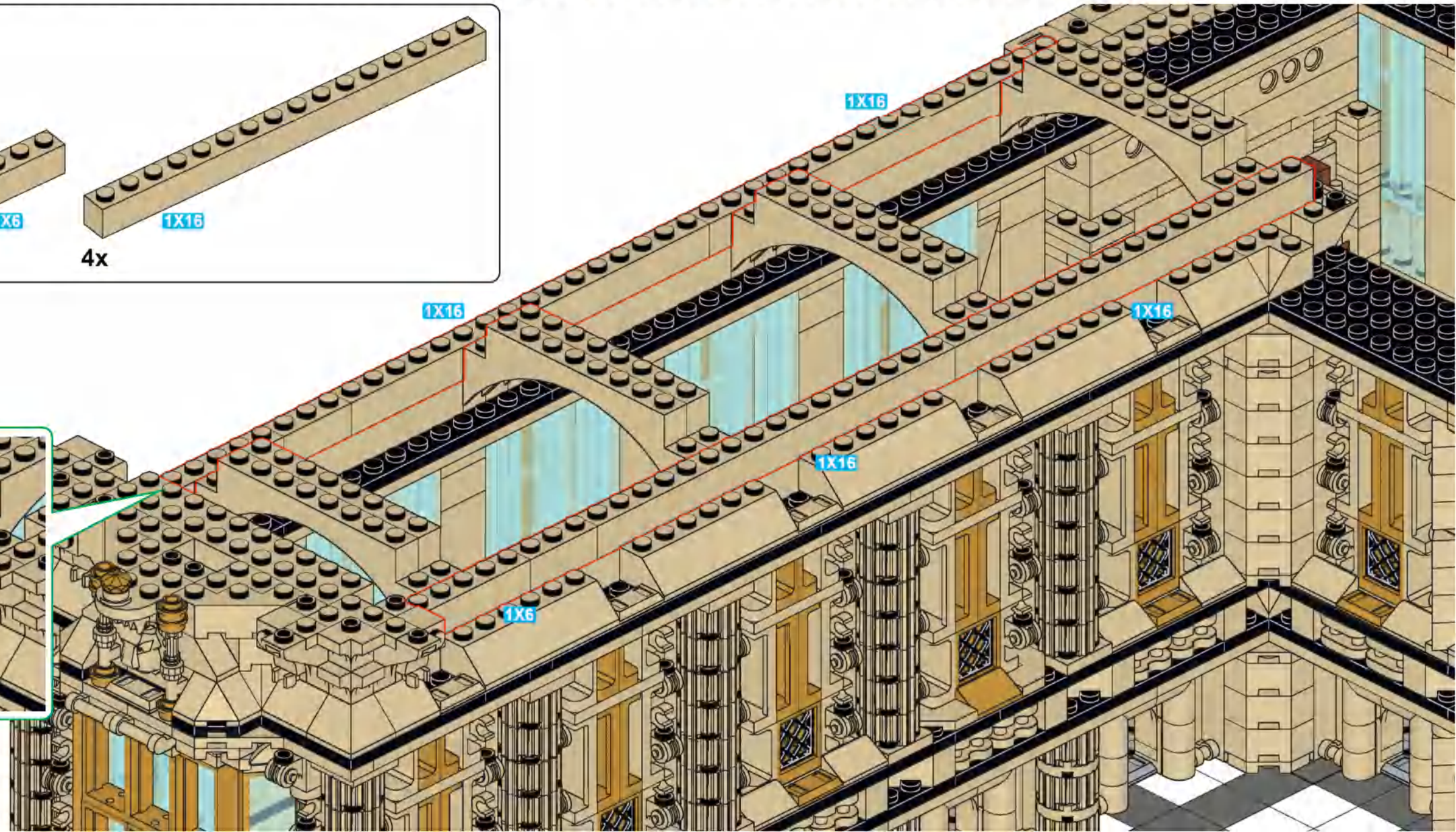

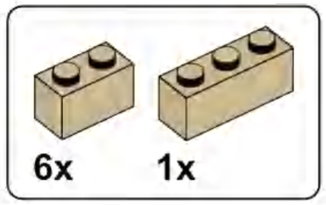

M5

M6

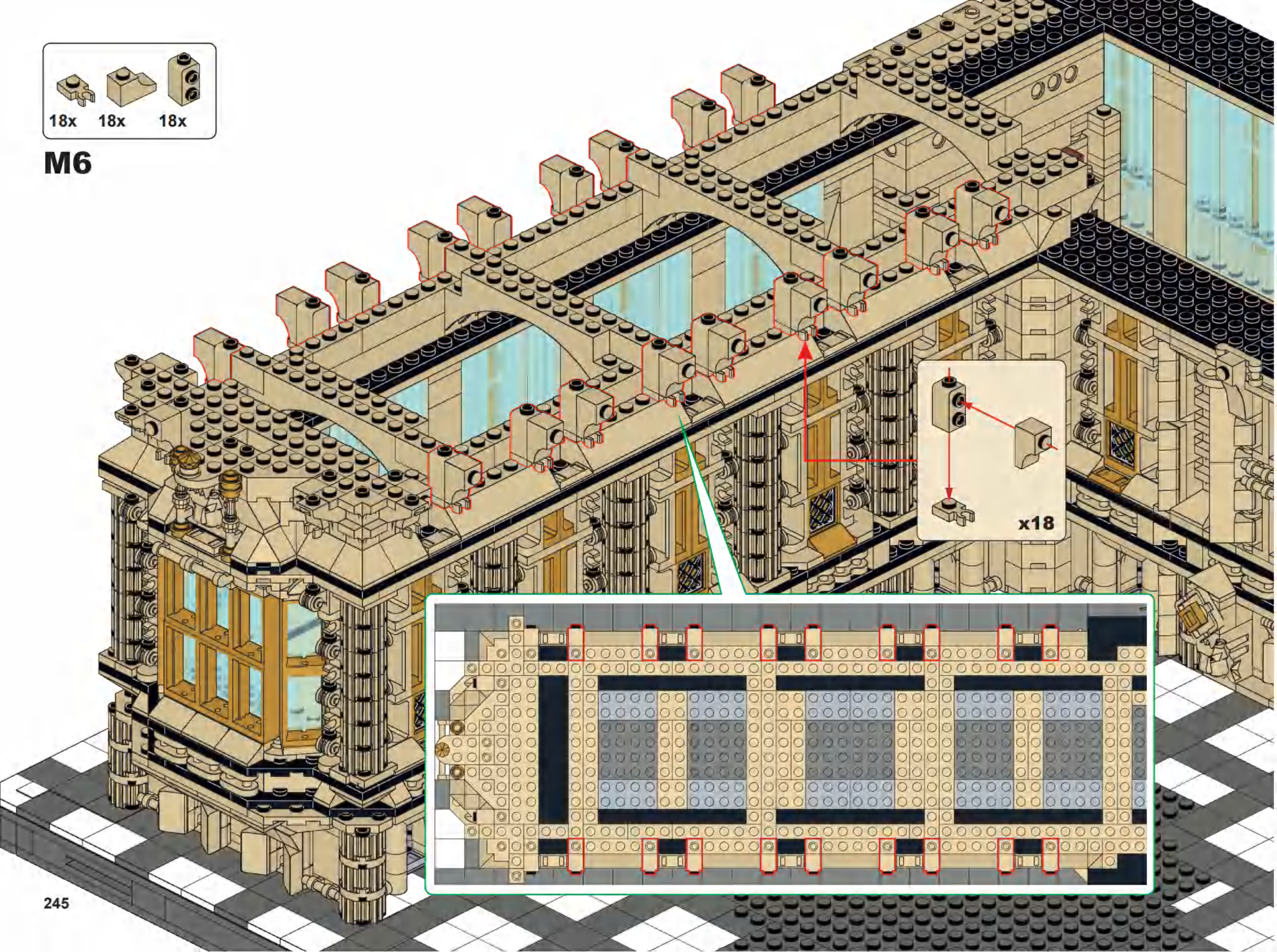

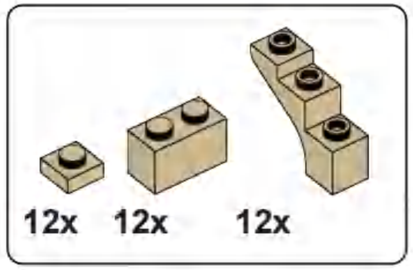

M7

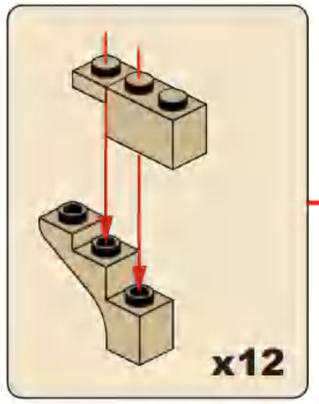

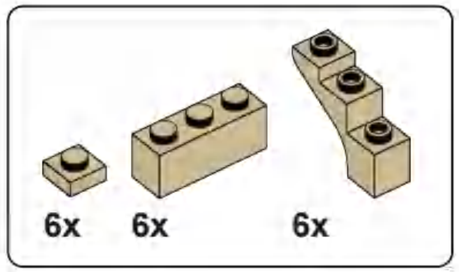

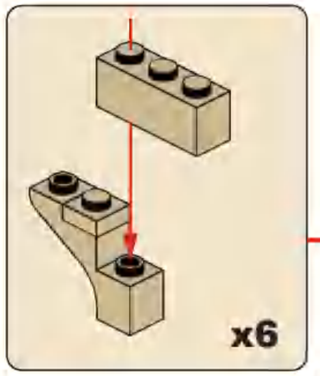

M8

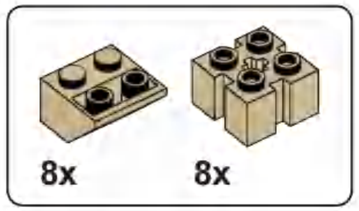

M9

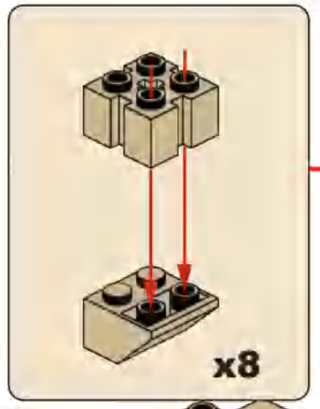

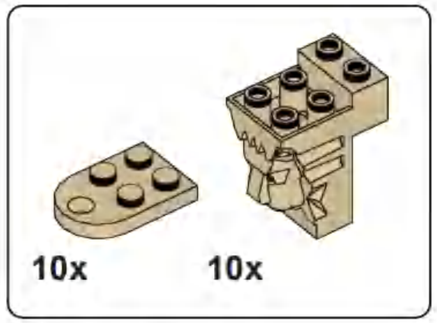

M10

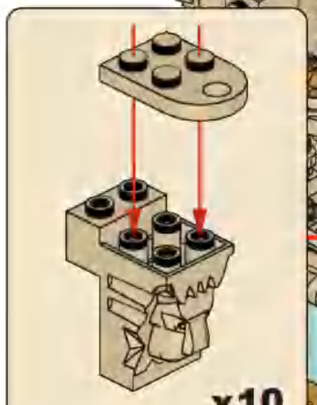

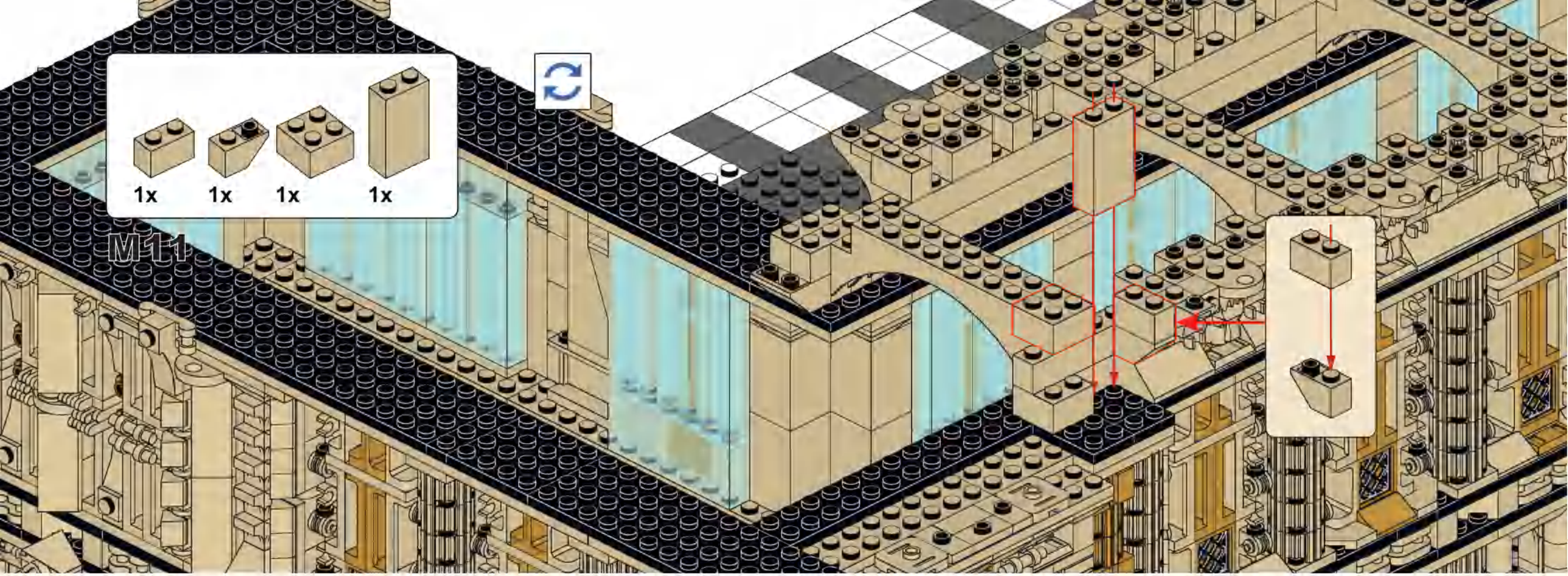
1x
1x
1x
1x
M11

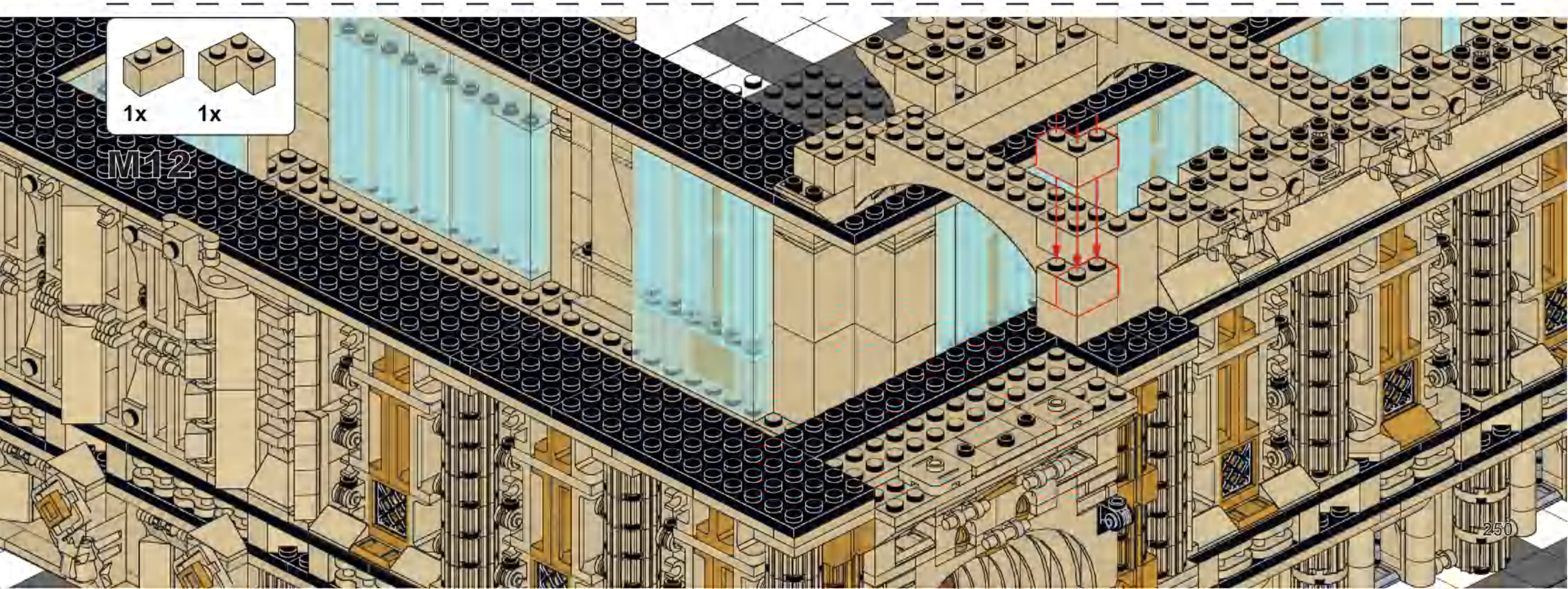
1x
1x
M12

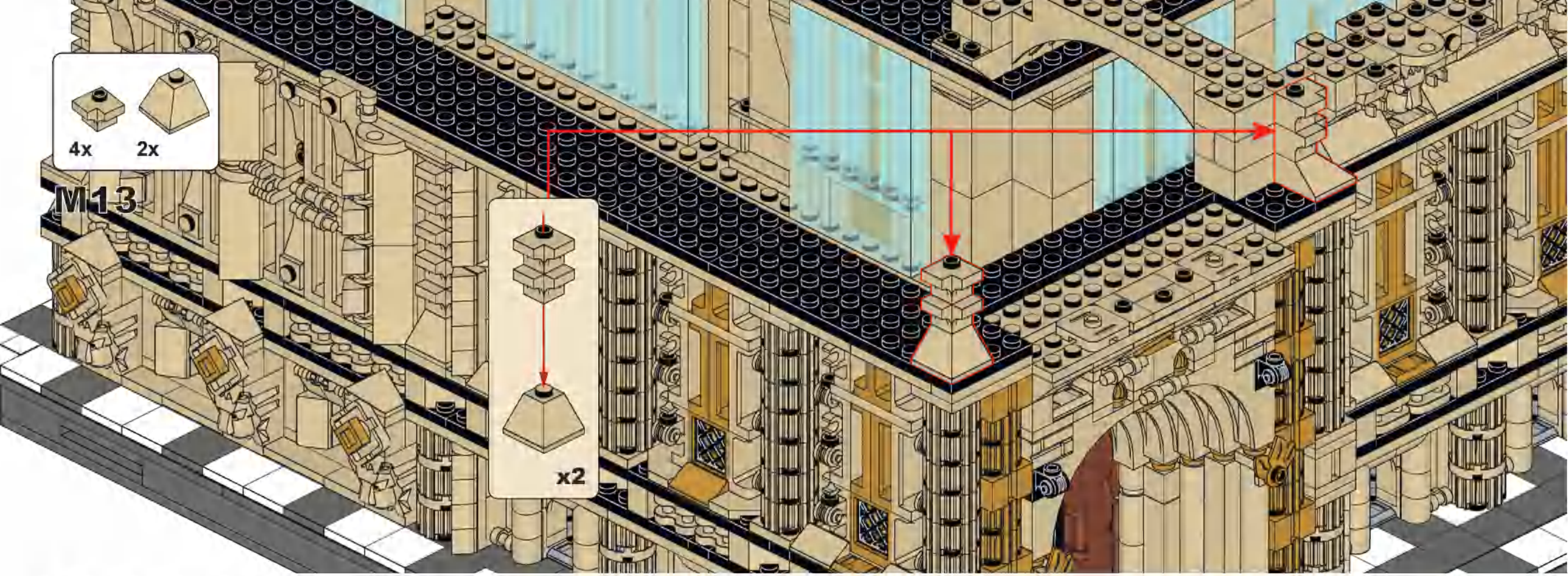
4x
2x
M13
x2

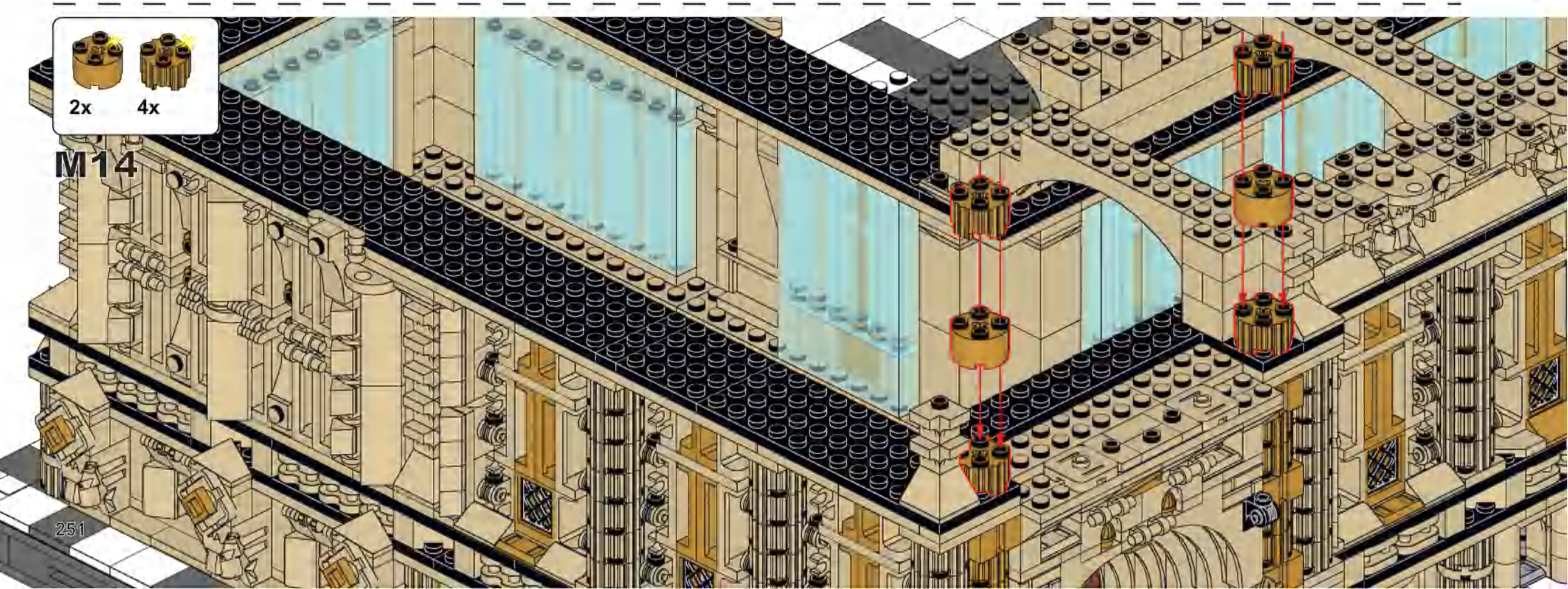
2x
4x
M14

M15

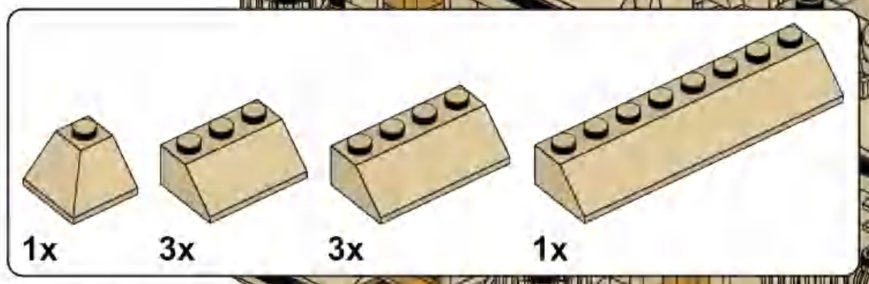

M16

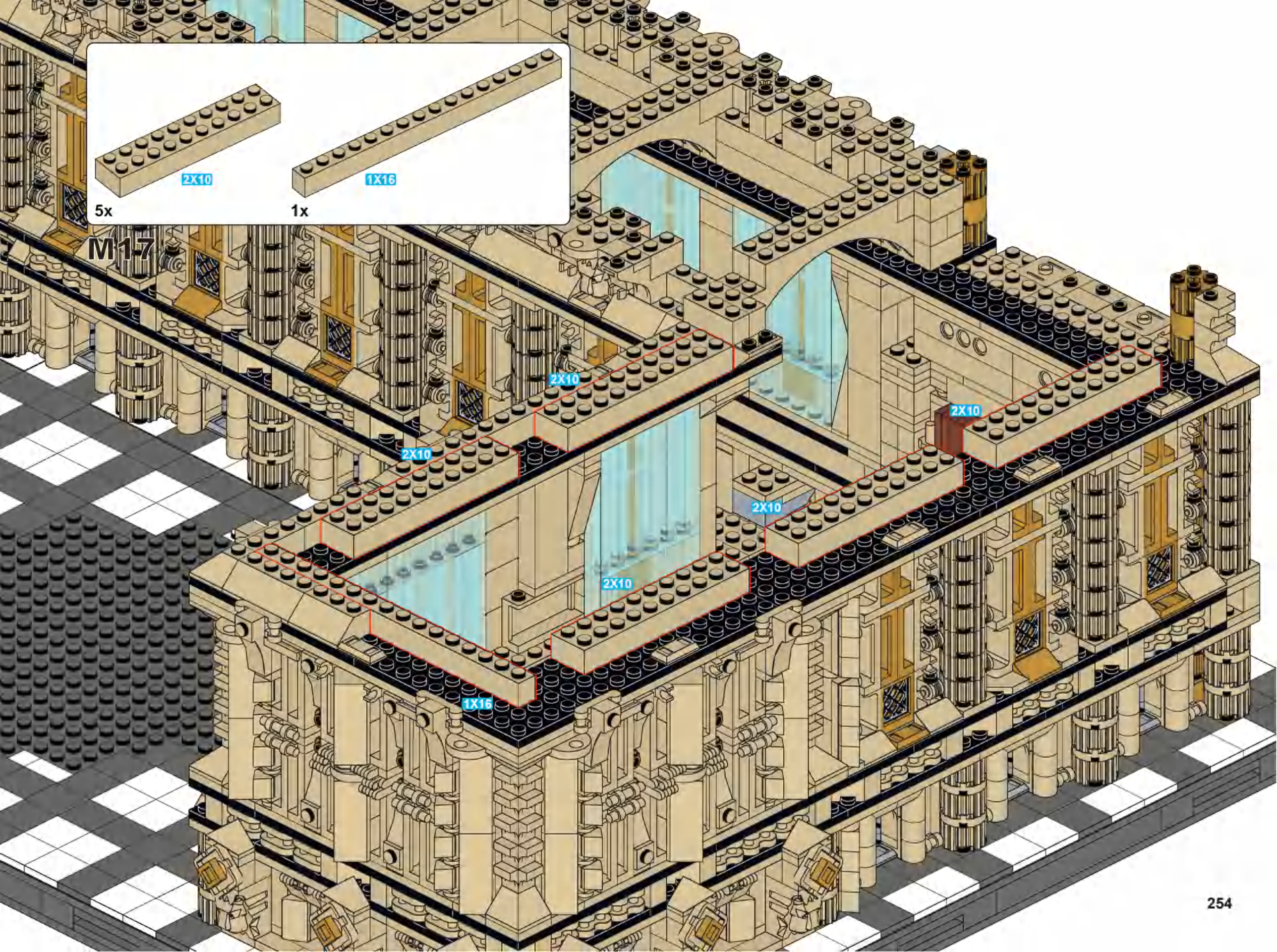
2X10
1X16
5x
1x
M17
2X10
2X10
2X10
2X10
2X10
1X16

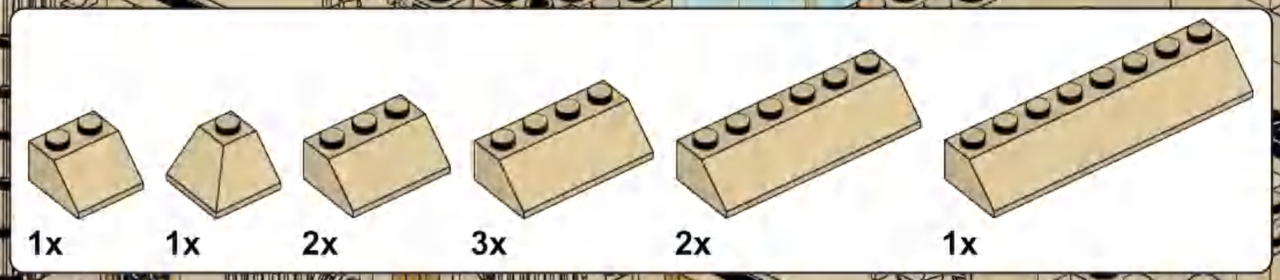

M18

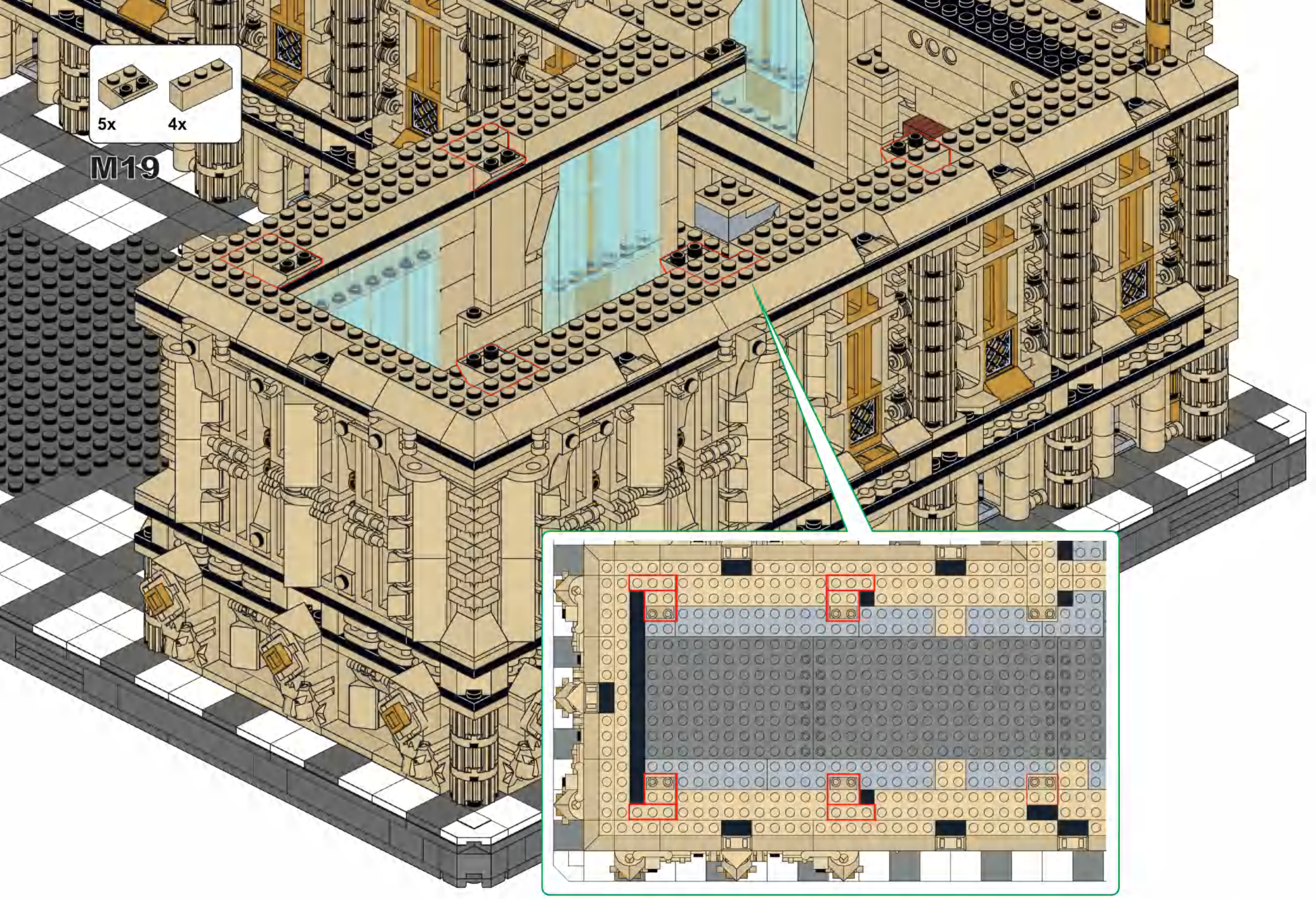
5x
4x
M19

2x 2x 2x

M20

x2

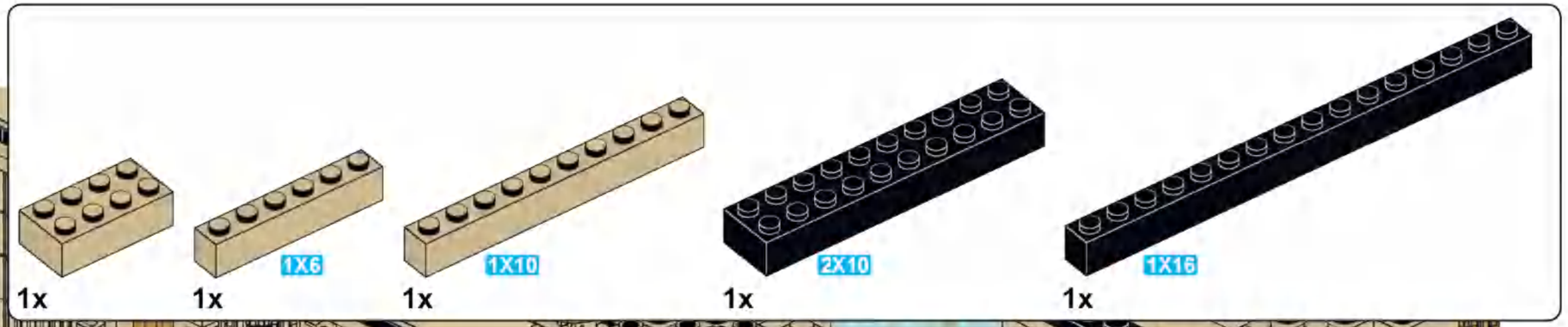
1x
1x
1X6
1x
1X10
1x
2X10
1x
1X16

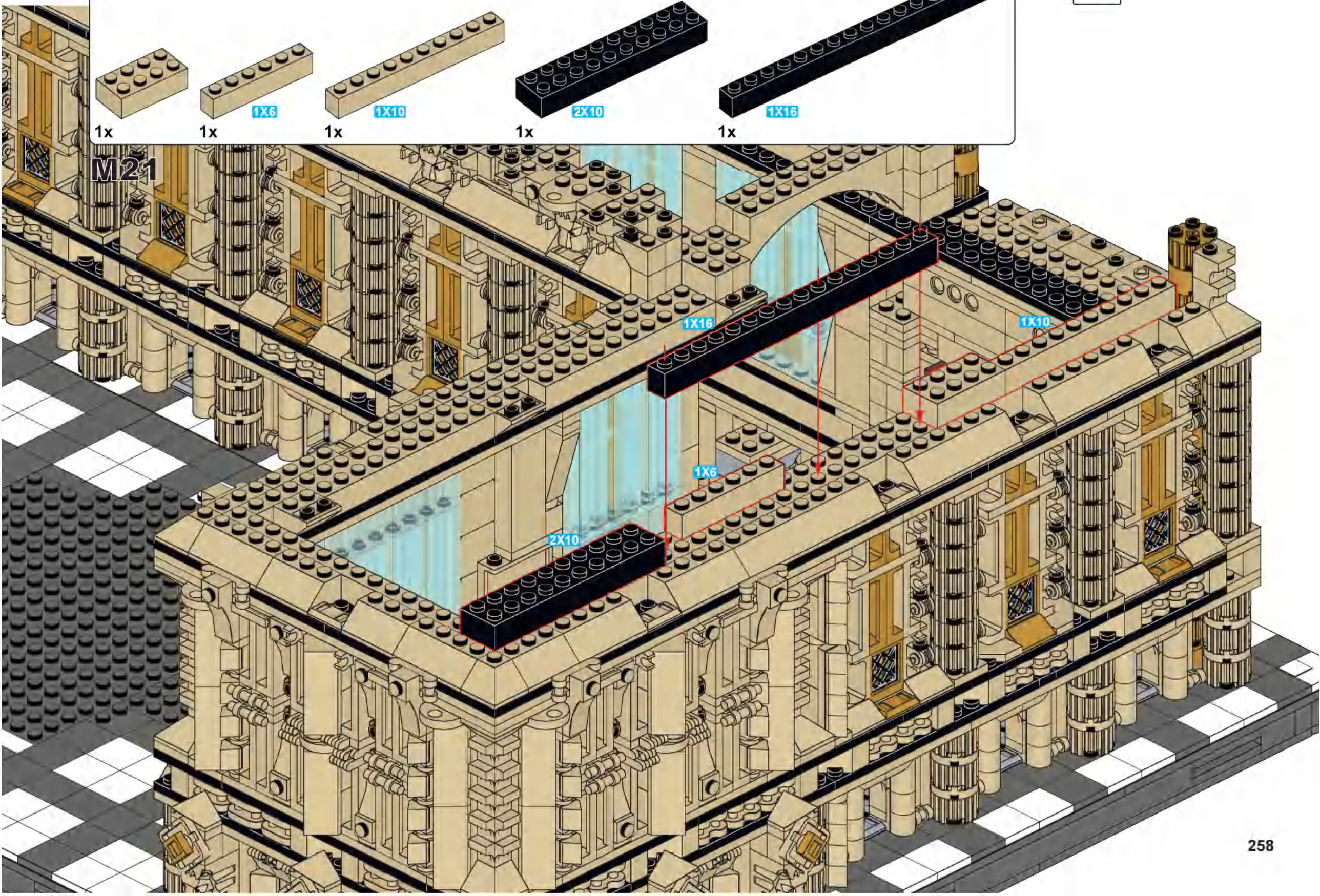
M21
1X16
1X10
1X6
2X10

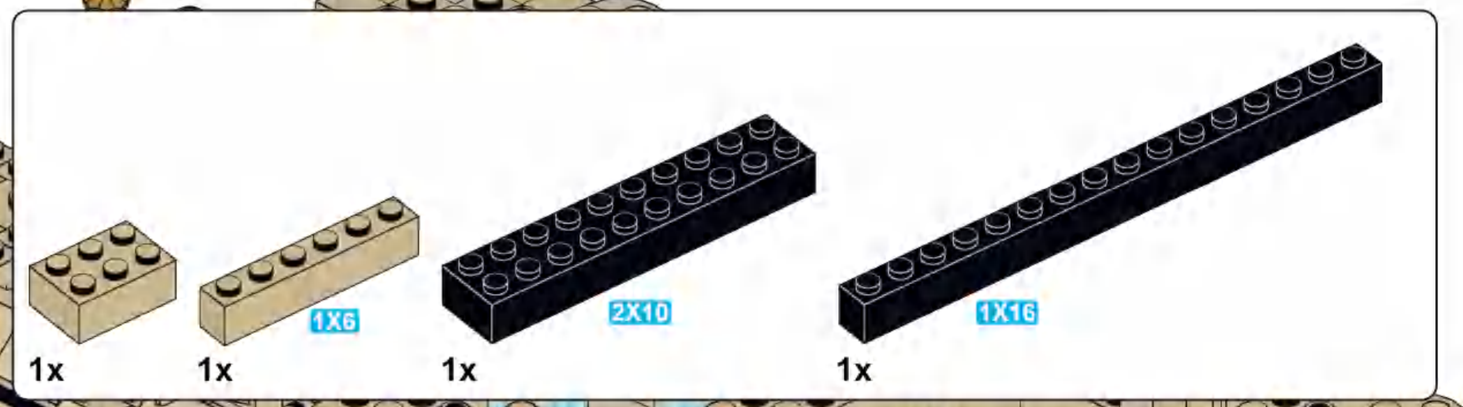

M22

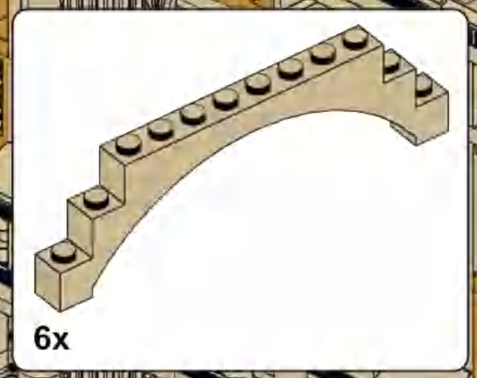

M23

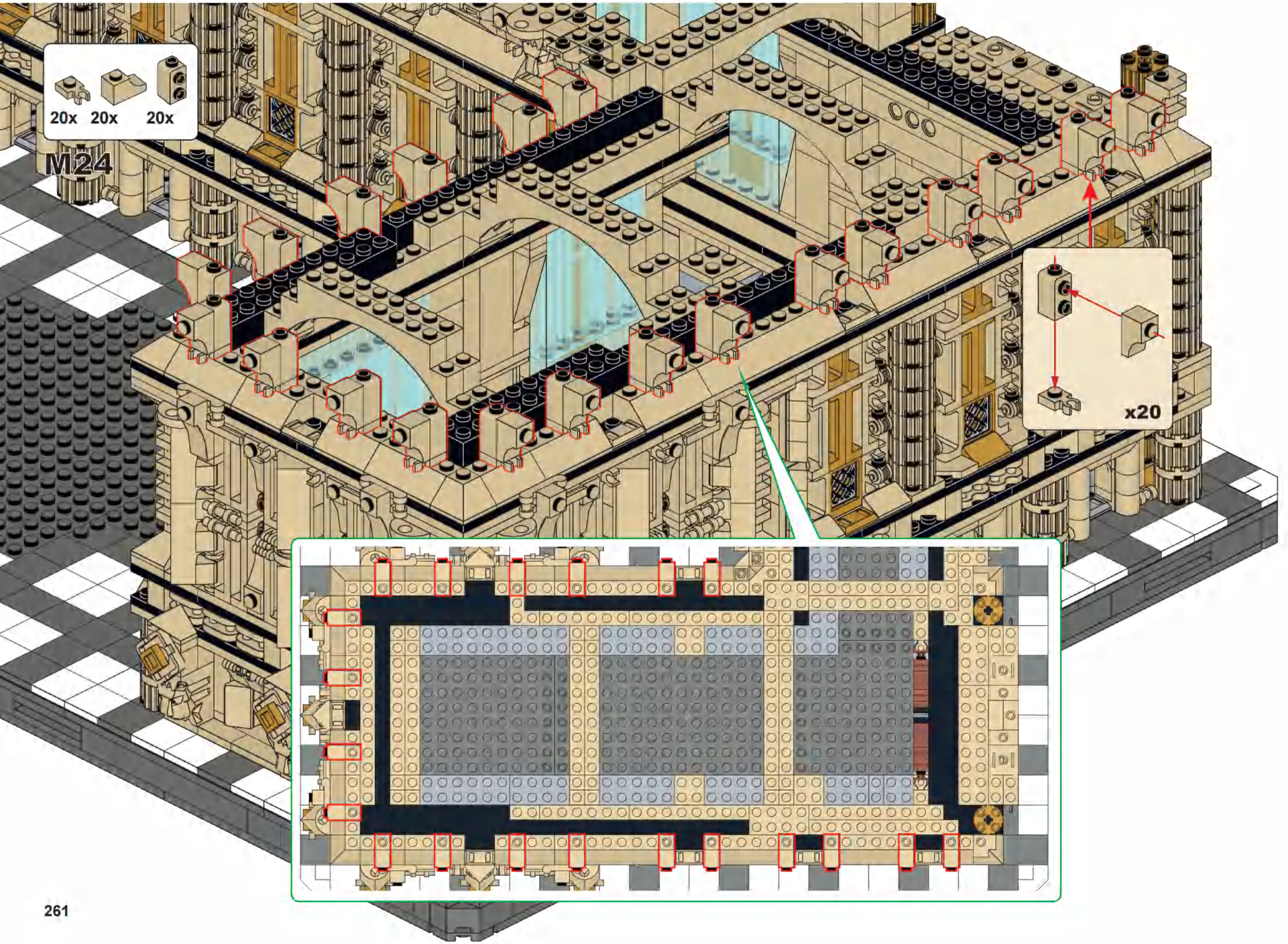
20x
20x
20x
M24
x20

Reobrix

NO.55012

THE CLOCK TOWER

Located in
London, UK

One of the world's
famous Gothic buildings

The prototype was built
during the reign of Edward
I from 1288 to 1290